US009078310B2

(12) **United States Patent**
Tikkanen et al.

(10) **Patent No.: US 9,078,310 B2**
(45) **Date of Patent: Jul. 7, 2015**

(54) **CONFIGURABLE LED DRIVER/DIMMER FOR SOLID STATE LIGHTING APPLICATIONS**

(71) Applicant: **LUMASTREAM CANADA ULC**, Calgary (CA)

(72) Inventors: **David Tikkanen**, Waterloo (CA); **Jason Neudorf**, Kitchener (CA); **Steven Lyons**, Kitchener (CA); **Kyle Hathaway**, Kitchener (CA)

(73) Assignee: **LUMASTREAM CANADA ULC**, Calgary (CA)

(*) Notice: Subject to any disclaimer, the term of this patent is extended or adjusted under 35 U.S.C. 154(b) by 0 days.

(21) Appl. No.: **14/597,788**

(22) Filed: **Jan. 15, 2015**

(65) **Prior Publication Data**

US 2015/0115839 A1 Apr. 30, 2015

Related U.S. Application Data

(63) Continuation of application No. 13/941,871, filed on Jul. 15, 2013, which is a continuation of application No. 13/059,336, filed as application No. PCT/CA2009/001295 on Sep. 17, 2009, now Pat. No. 8,525,446.

(60) Provisional application No. 61/097,963, filed on Sep. 18, 2008.

(51) **Int. Cl.**
H05B 37/00 (2006.01)
H05B 33/08 (2006.01)

(52) **U.S. Cl.**
CPC ***H05B 33/08*** (2013.01)

(58) **Field of Classification Search**
CPC H05B 33/0815; H05B 41/28; H05B 33/0803; H05B 33/0806
USPC 315/247, 291, 294, 297, 302, 307, 312
See application file for complete search history.

(56) **References Cited**

U.S. PATENT DOCUMENTS

5,008,595	A	4/1991	Kazar
5,420,780	A	5/1995	Bernstein et al.
6,720,745	B2	4/2004	Lys et al.

(Continued)

FOREIGN PATENT DOCUMENTS

WO	2008052293	5/2008
WO	2009039112	3/2009

OTHER PUBLICATIONS

Ericsson AB, Power Supplies Goes Digital White Paper, Oct. 2006.

(Continued)

Primary Examiner — Jason M Crawford
(74) *Attorney, Agent, or Firm* — Gowling Lafleur Henderson LLP; Jeffrey W. Wong

(57) **ABSTRACT**

A configurable light emitting diode (LED) driver for powering a set of light fixture loads including a power circuit and a primary controller for controlling the power circuit. The driver further includes a set of output current drivers, each of the set of output current drivers connected to one of the set of light fixture loads for controlling the associated light fixture load and a secondary controller for controlling the set of output current drivers. The driver also includes an apparatus for mapping the set of output current drivers to various dimming zones and for mapping output channels into groups.

20 Claims, 12 Drawing Sheets

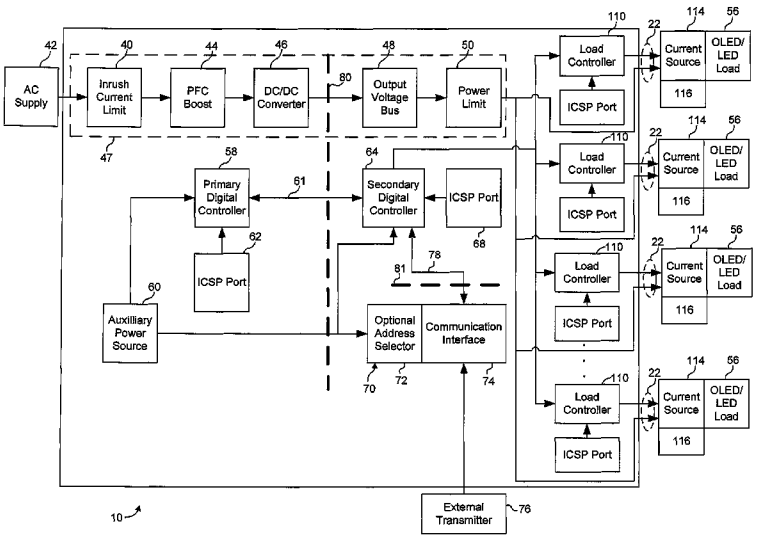

(56) **References Cited**

U.S. PATENT DOCUMENTS

7,310,074	B2	12/2007	Chen	
7,405,523	B2	7/2008	Wilhelm et al.	
7,804,189	B2	9/2010	Koehler et al.	
7,961,113	B2	6/2011	Rabiner et al.	
8,143,792	B2	3/2012	Joo et al.	
8,197,079	B2	6/2012	Ruud et al.	
8,258,721	B2	9/2012	Meyer	
8,310,171	B2	11/2012	Reisenauer et al.	
8,436,555	B2	5/2013	Lo et al.	
8,525,446	B2 *	9/2013	Tikkanen et al.	315/312
8,604,712	B2	12/2013	Bloom et al.	
2002/0047642	A1 *	4/2002	Miyagawa	315/307
2005/0218838	A1 *	10/2005	Lys	315/291
2005/0289279	A1	12/2005	Fails et al.	
2006/0132063	A1	6/2006	Hung et al.	
2008/0018261	A1 *	1/2008	Kastner	315/192
2008/0025028	A1 *	1/2008	Gloisten et al.	362/294
2009/0179594	A1	7/2009	Yang	
2010/0066267	A1	3/2010	Meyer	
2010/0164403	A1 *	7/2010	Liu	315/297
2010/0231136	A1	9/2010	Reisenauer et al.	
2011/0018464	A1	1/2011	Lo et al.	
2011/0309746	A1	12/2011	Eckel et al.	

OTHER PUBLICATIONS

Skanda; Microchip Technology Inc., Power Factor Correction in Power Conversion Applications using the dsPIC® DSC, AN1106, Jun. 2007.

Traxon Technologies, LED Engine XB 3W-108 Technical Specifications and User Manual Version 1.1, 2007.

Penwell Corporation, Dialight Lumidrives Launches Colurdriver XP for High-Power LEDs, LEDs Magazine, downloaded from http://www.ledsmagazine.com/press/15469, Sep. 25, 2007.

Colourdriver XP data sheet, Jul. 30, 2008.

US-Tech Online, Dialight: New High Power LED Driver, downloaded from http://www.us-tech.com, Oct. 2007.

IST Ltd., iDrive™ 1000 The Intelligent 210W LED Driver User Manual, v. 1.7, Jun. 20, 2008.

Roal Electronics, S.P.A, Programmable RGB LED Driver 200 Watts Model RHPS180 Product Details, Rev. 2, Oct. 2007.

International Searching Authority (CA), International Search Report and Written Opinion for International Patent Application No. PCT/CA2009/001295, Jan. 13, 2010.

Search & Examination Report (UK), Further Search Report and Examination Report for GB1102782.8, Sep. 6, 2012.

United States Patent and Trademark Office, Office Action for U.S. Appl. No. 13/059,336, Jan. 23, 2013.

United States Patent and Trademark Office, Office Action for U.S. Appl. No. 13/466,529, Dec. 13, 2013.

United States Patent and Trademark Office, Office Action for U.S. Appl. No. 13/466,509, Feb. 21, 2014.

United States Patent and Trademark Office, Office Action for U.S. Appl. No. 13/466,509, Jun. 27, 2014.

United States Patent and Trademark Office, Notice of Allowance for U.S. Appl. No. 13/466,509, Oct. 6, 2014.

Power Vector, A Division of Electronic Craftsmen, Product Information Sheet for IRIS LED Driver/Dimmer, Oct. 22, 2007.

Tryka L.E.D. Ltd, Product Information Sheet for IDS-12 Intelligent Drive System, http://www.tryka.co.uk/IDS-12.htm, downloaded Jul. 18, 2007.

* cited by examiner

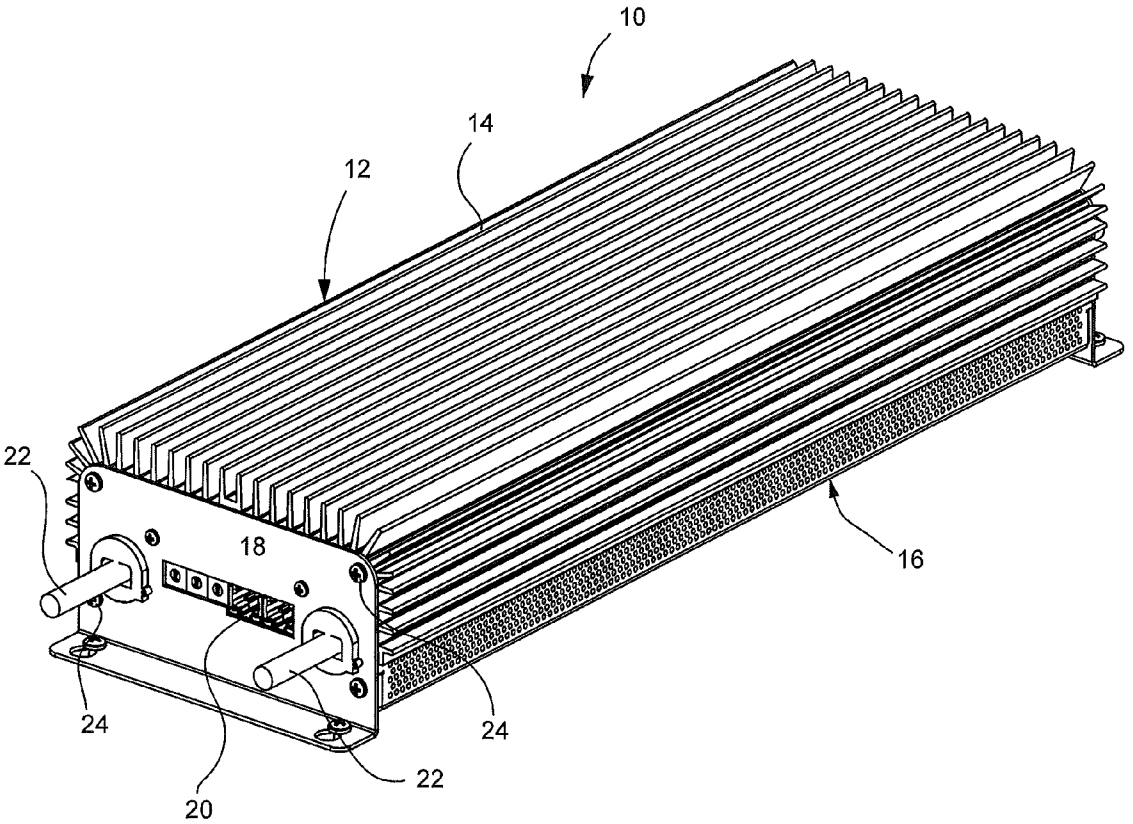

FIGURE 1

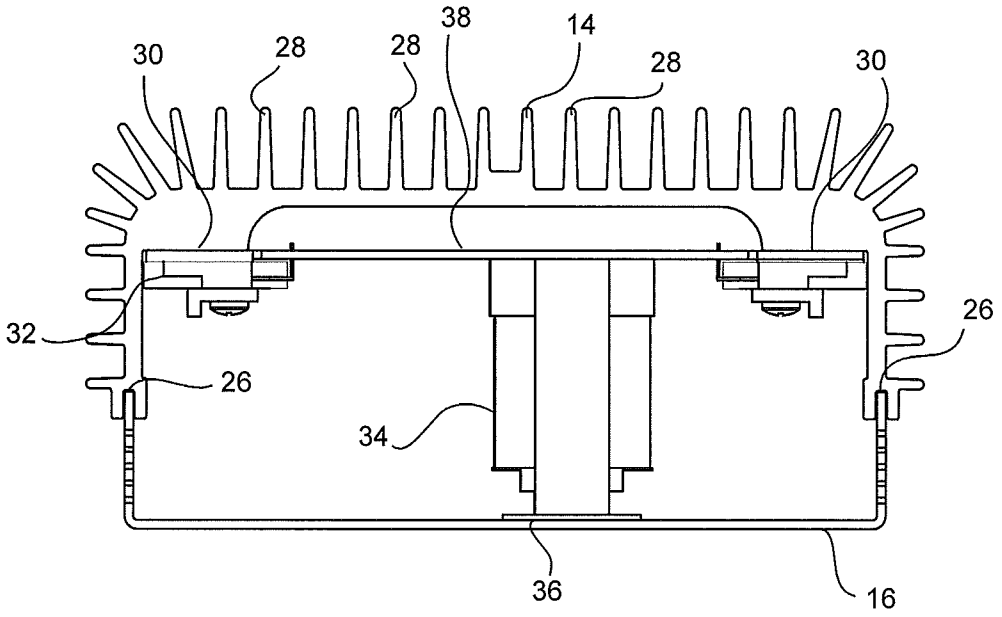

FIGURE 2a

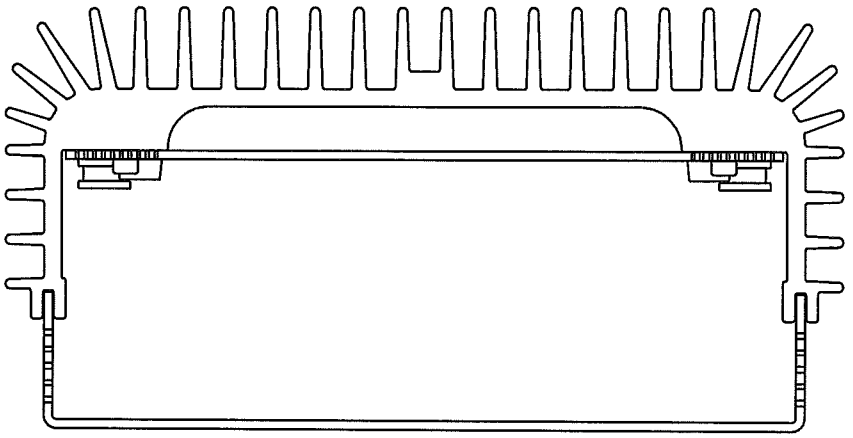

FIGURE 2b

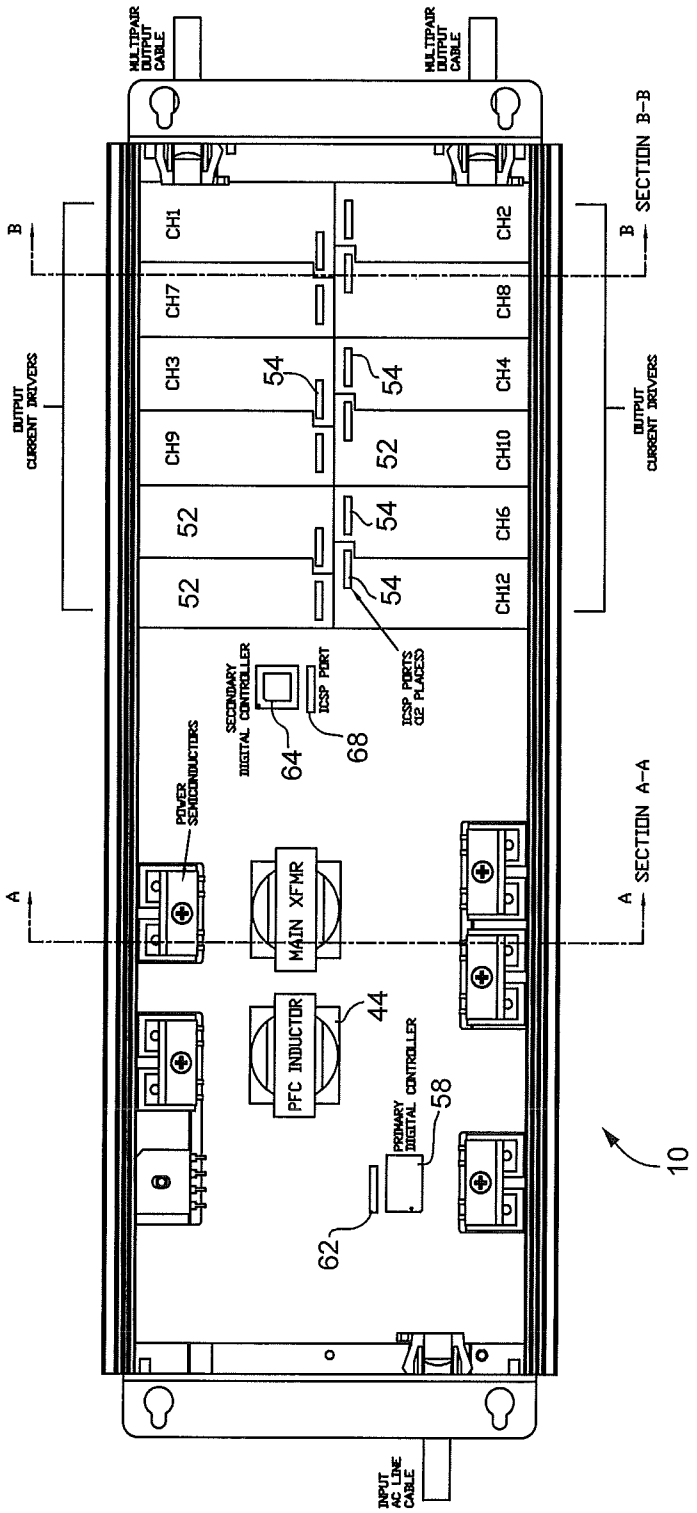
MULTIPAIR OUTPUT CABLE
MULTIPAIR OUTPUT CABLE
SECTION B-B
B
B
CH1
CH2
CH7
CH8
CH3
CH4
CH9
CH10
CH6
CH12
54
54
52
54
52
54
OUTPUT CURRENT DRIVERS
OUTPUT CURRENT DRIVERS
SECONDARY DIGITAL CONTROLLER
ICSP PORT
ICSP PORTS (12 PLACES)
64
68
POWER SEMICONDUCTORS
SECTION A-A
A
A
MAIN XFMR
PFC INDUCTOR
44
PRIMARY DIGITAL CONTROLLER
58
62
10
INPUT AC LINE CABLE

FIGURE 2c

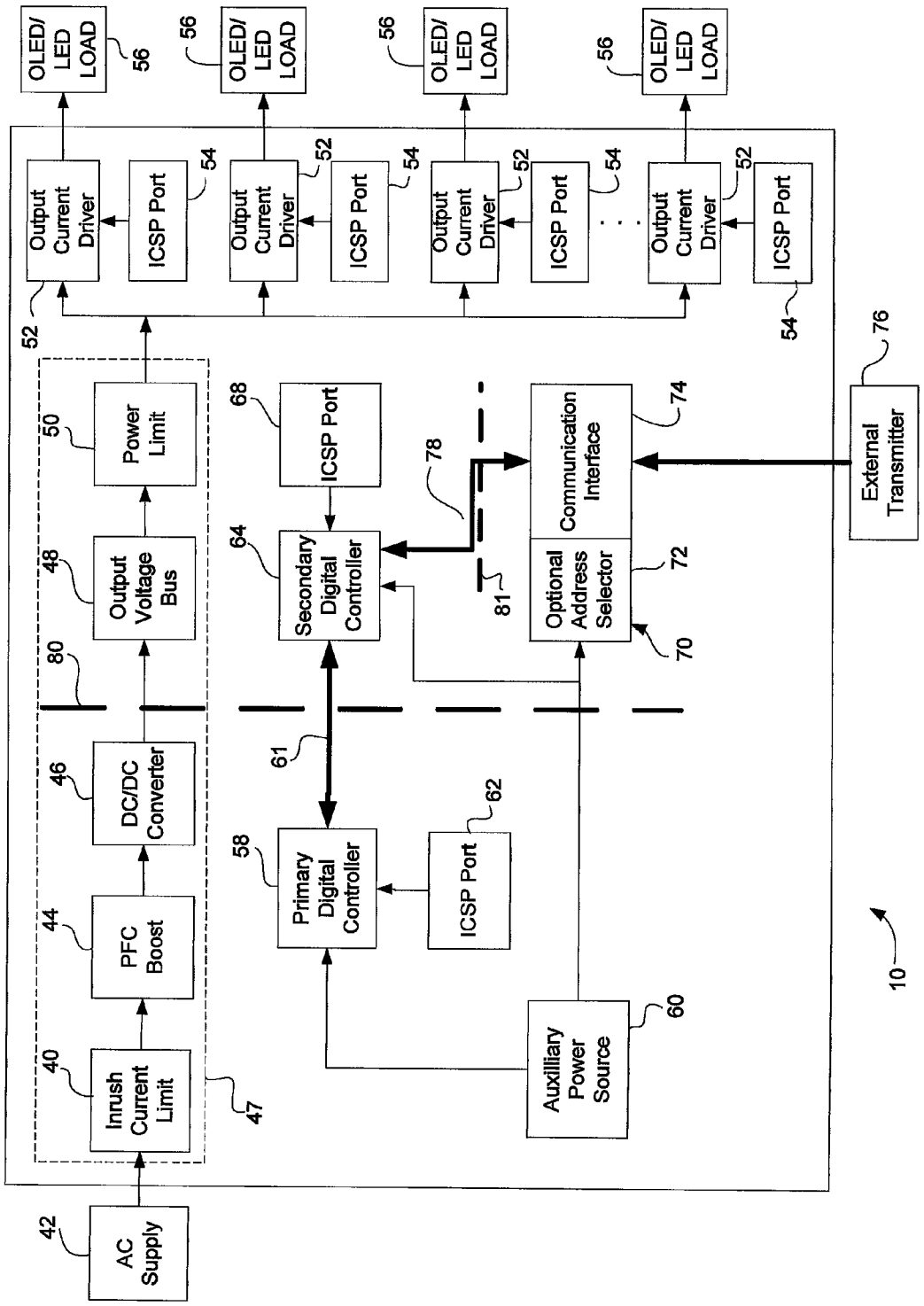
OLED/ LED LOAD
56
Output Current Driver
52
ICSP Port
54
Power Limit
50
Output Voltage Bus
48
DC/DC Converter
46
PFC Boost
44
Inrush Current Limit
40
47
80
AC Supply
42
ICSP Port
68
Secondary Digital Controller
64
61
Primary Digital Controller
58
ICSP Port
62
Auxilliary Power Source
60
78
81
Communication Interface
74
Optional Address Selector
72
70
External Transmitter
76
10

FIGURE 3

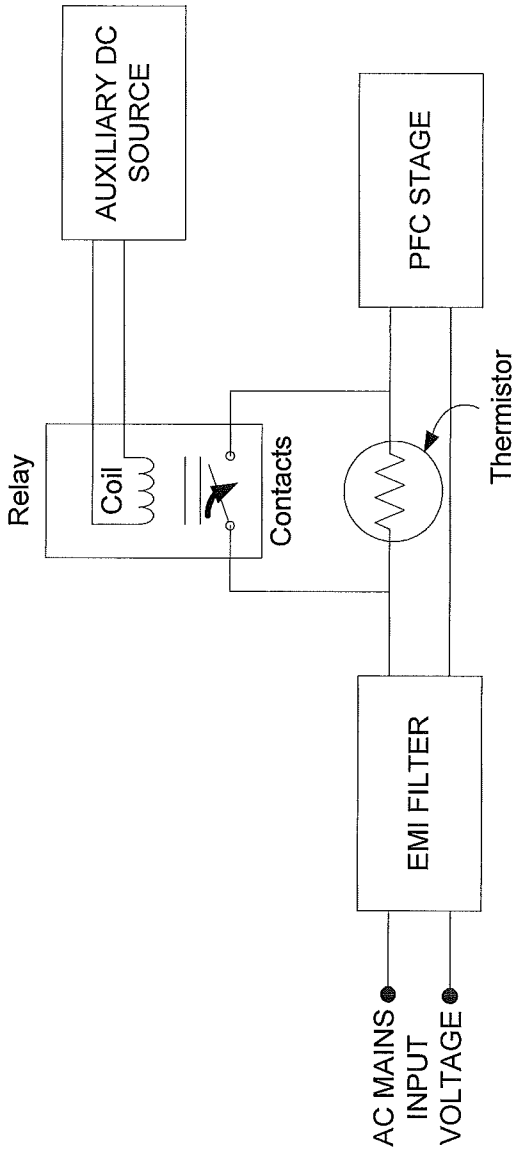

FIGURE 4 (PRIOR ART)

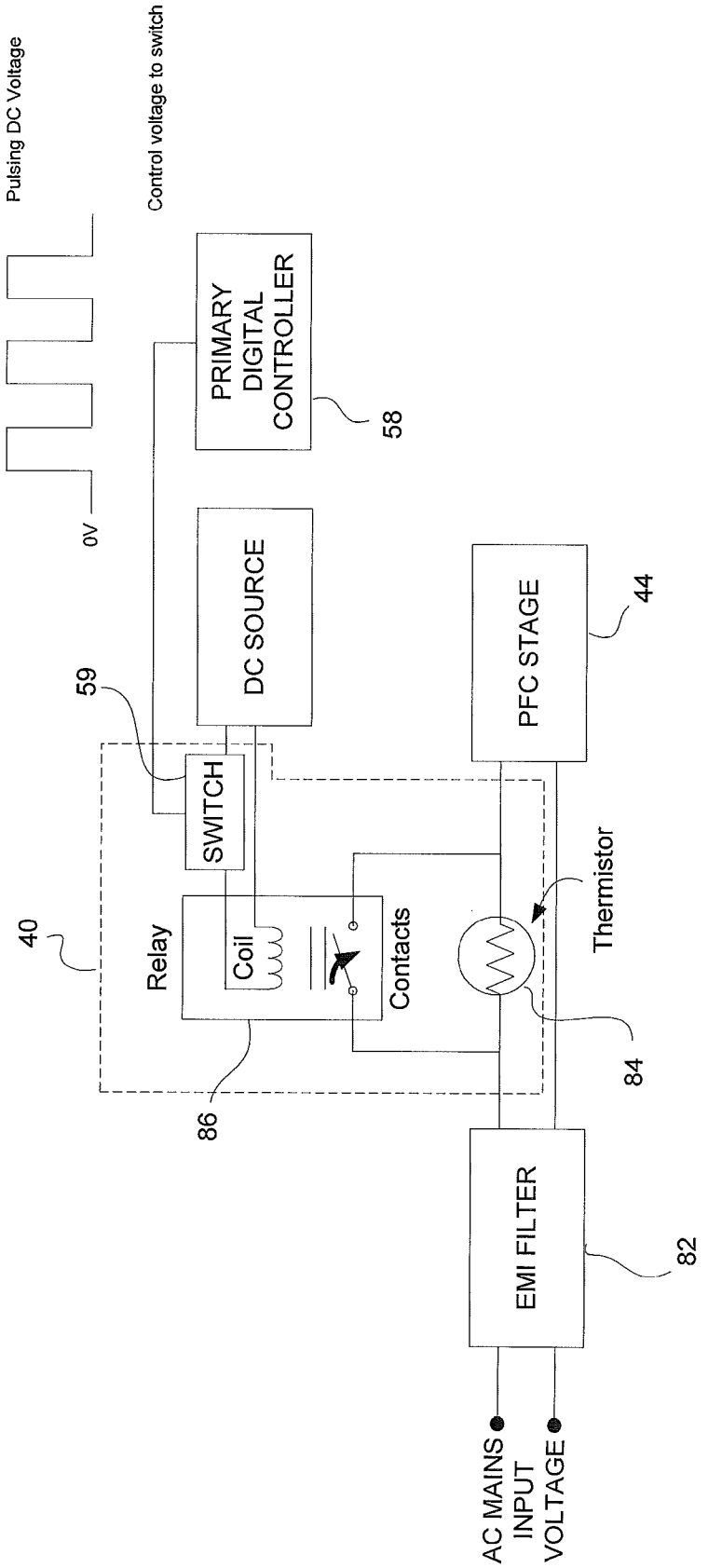
Pulsing DC Voltage
0V
Control voltage to switch
PRIMARY DIGITAL CONTROLLER
58
DC SOURCE
59
SWITCH
40
Relay
Coil
Contacts
86
PFC STAGE
44
Thermistor
84
EMI FILTER
82
AC MAINS INPUT VOLTAGE

FIGURE 5

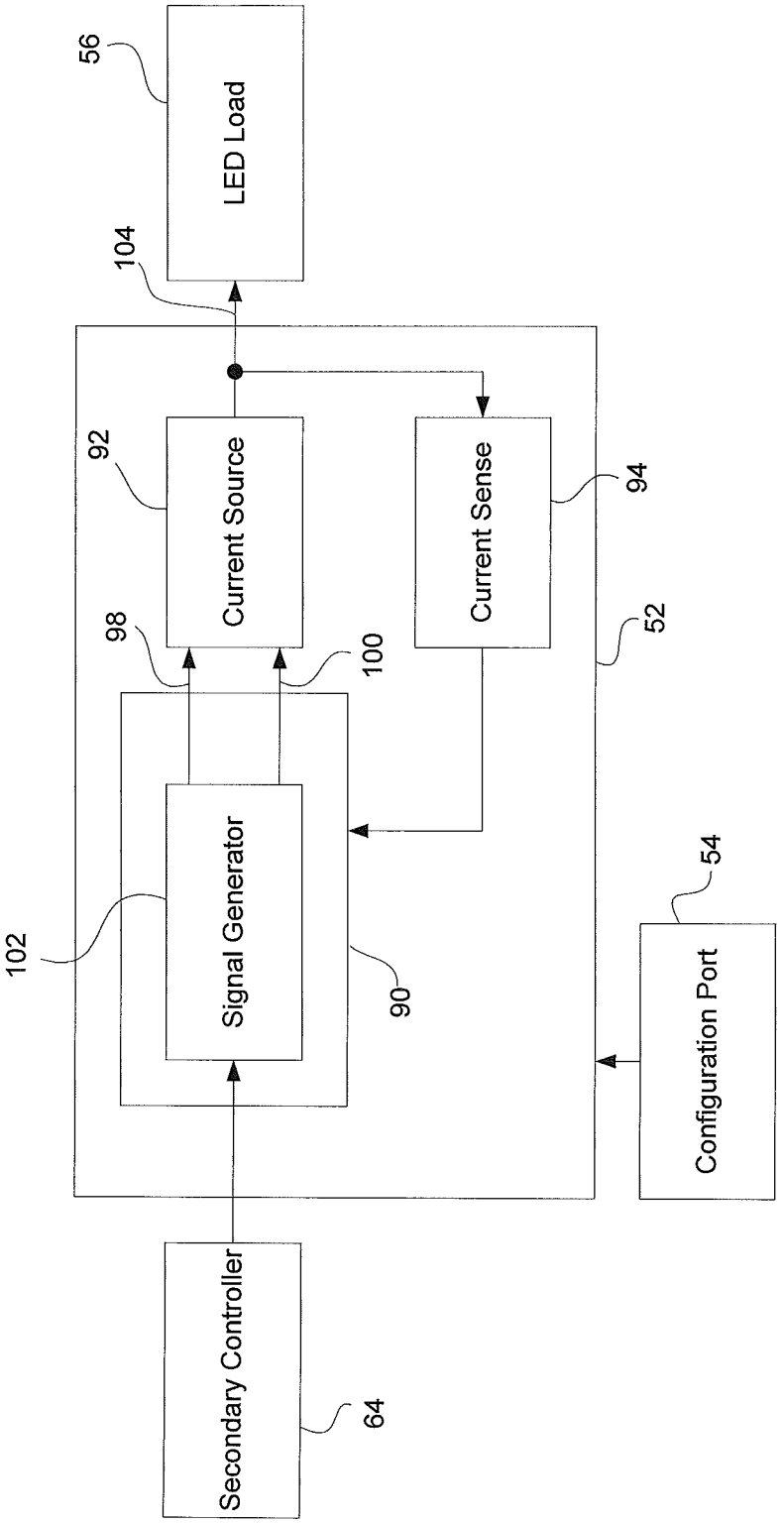
56
LED Load
104
92
Current Source
98
100
102
Signal Generator
90
Current Sense
94
52
54
Configuration Port
Secondary Controller
64

FIGURE 6

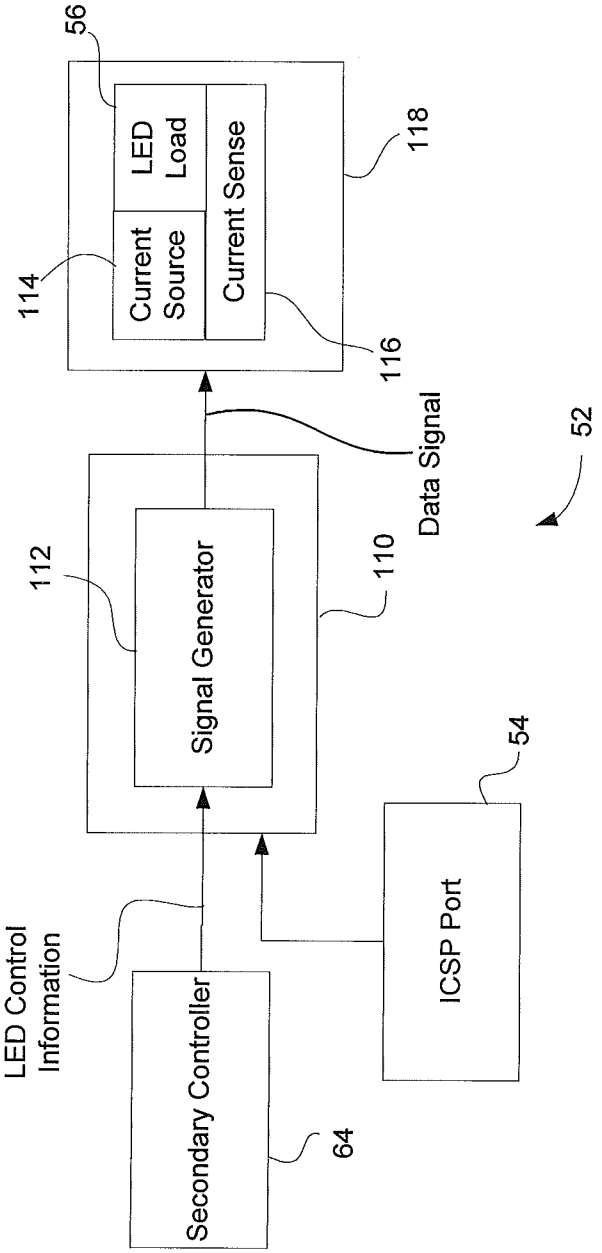
56
LED Load
Current Source
Current Sense
114
118
116
Data Signal
52
112
Signal Generator
110
54
ICSP Port
LED Control Information
Secondary Controller
64

FIGURE 7

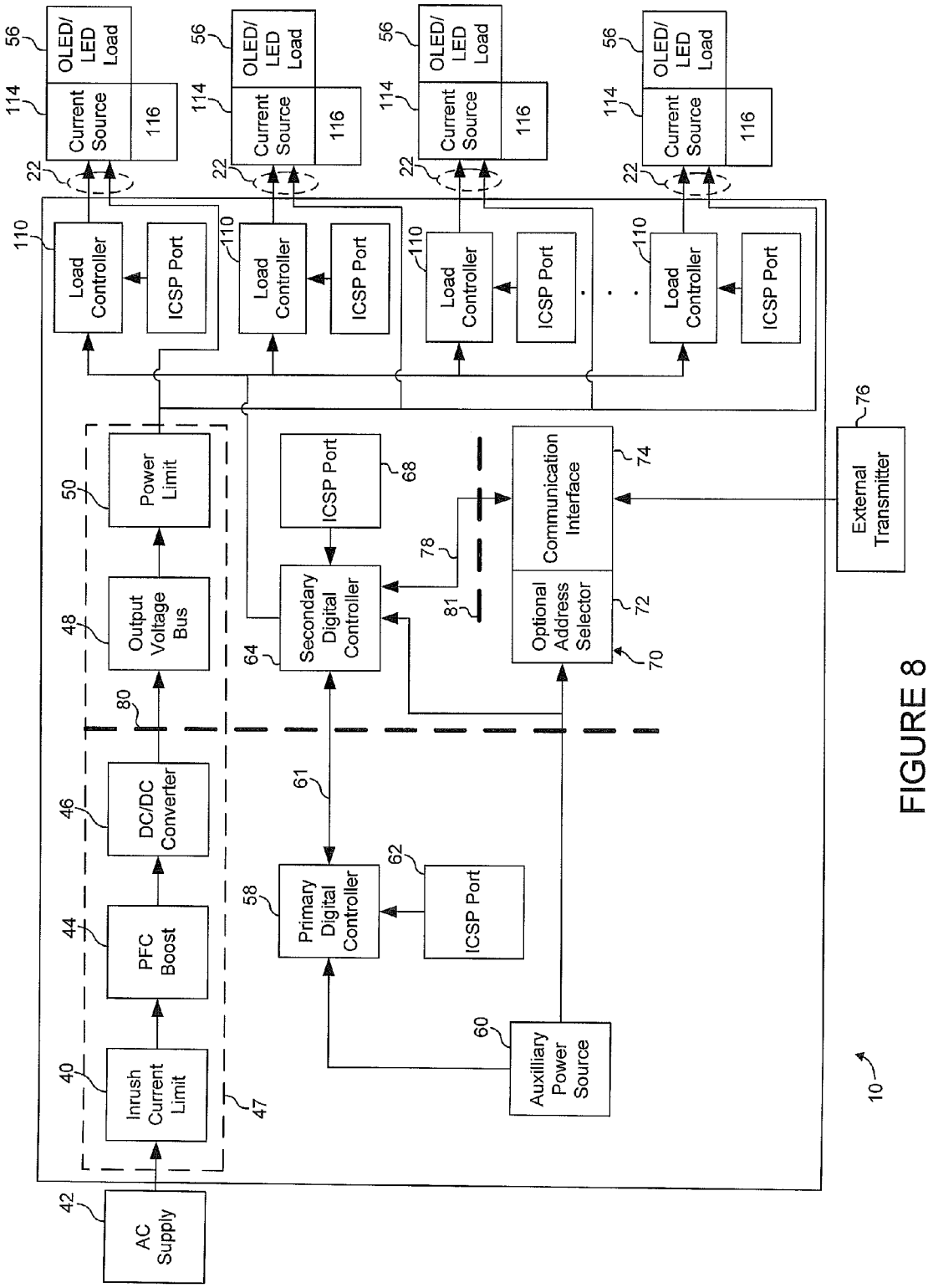
AC Supply
42
Inrush Current Limit
40
PFC Boost
44
DC/DC Converter
46
47
Output Voltage Bus
48
Power Limit
50
80
Primary Digital Controller
58
ICSP Port
62
61
Auxilliary Power Source
60
Secondary Digital Controller
64
ICSP Port
68
78
81
Communication Interface
74
Optional Address Selector
72
70
External Transmitter
76
Load Controller
110
ICSP Port
Current Source
114
116
22
OLED/ LED Load
56
10

FIGURE 8

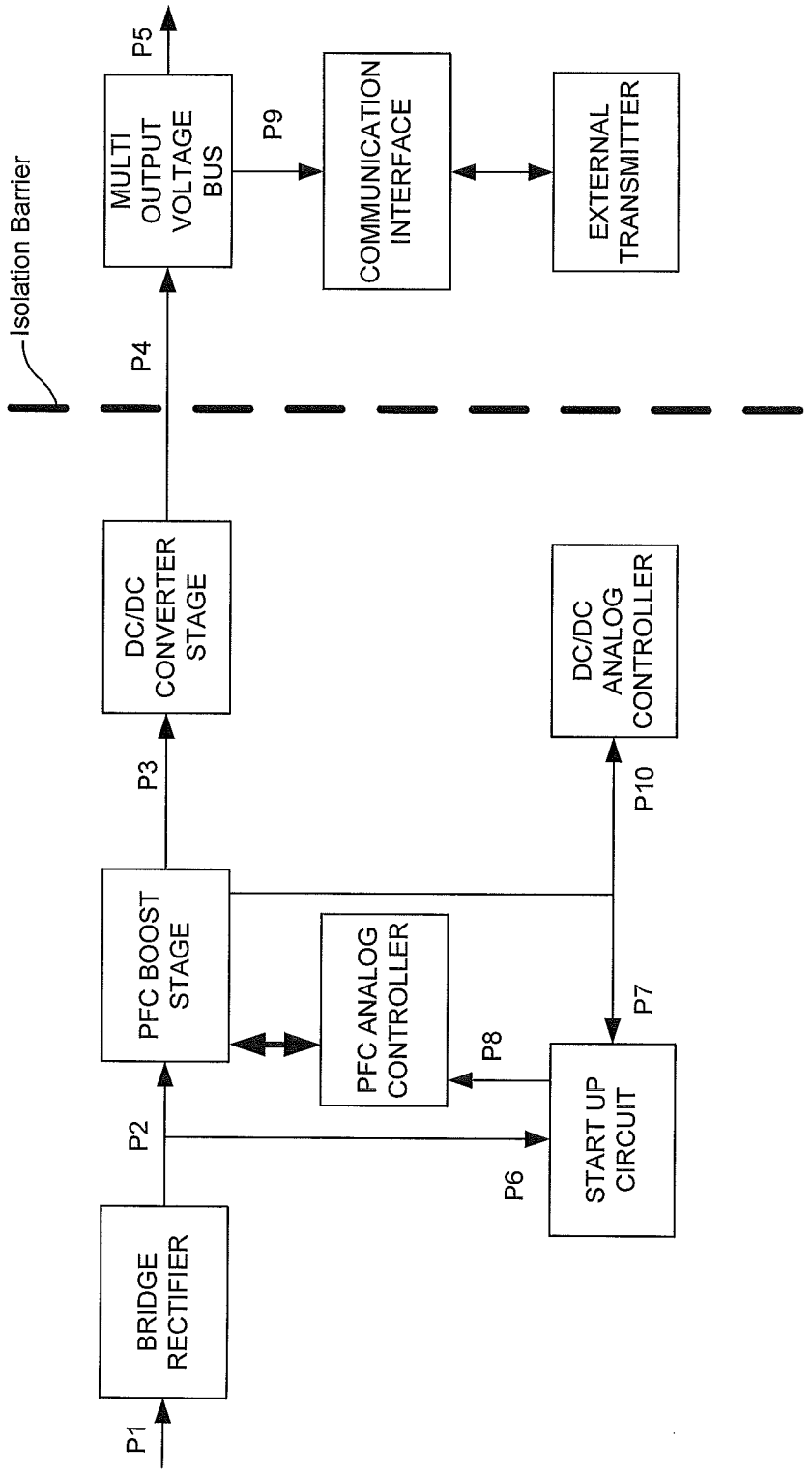

FIGURE 9 (PRIOR ART)

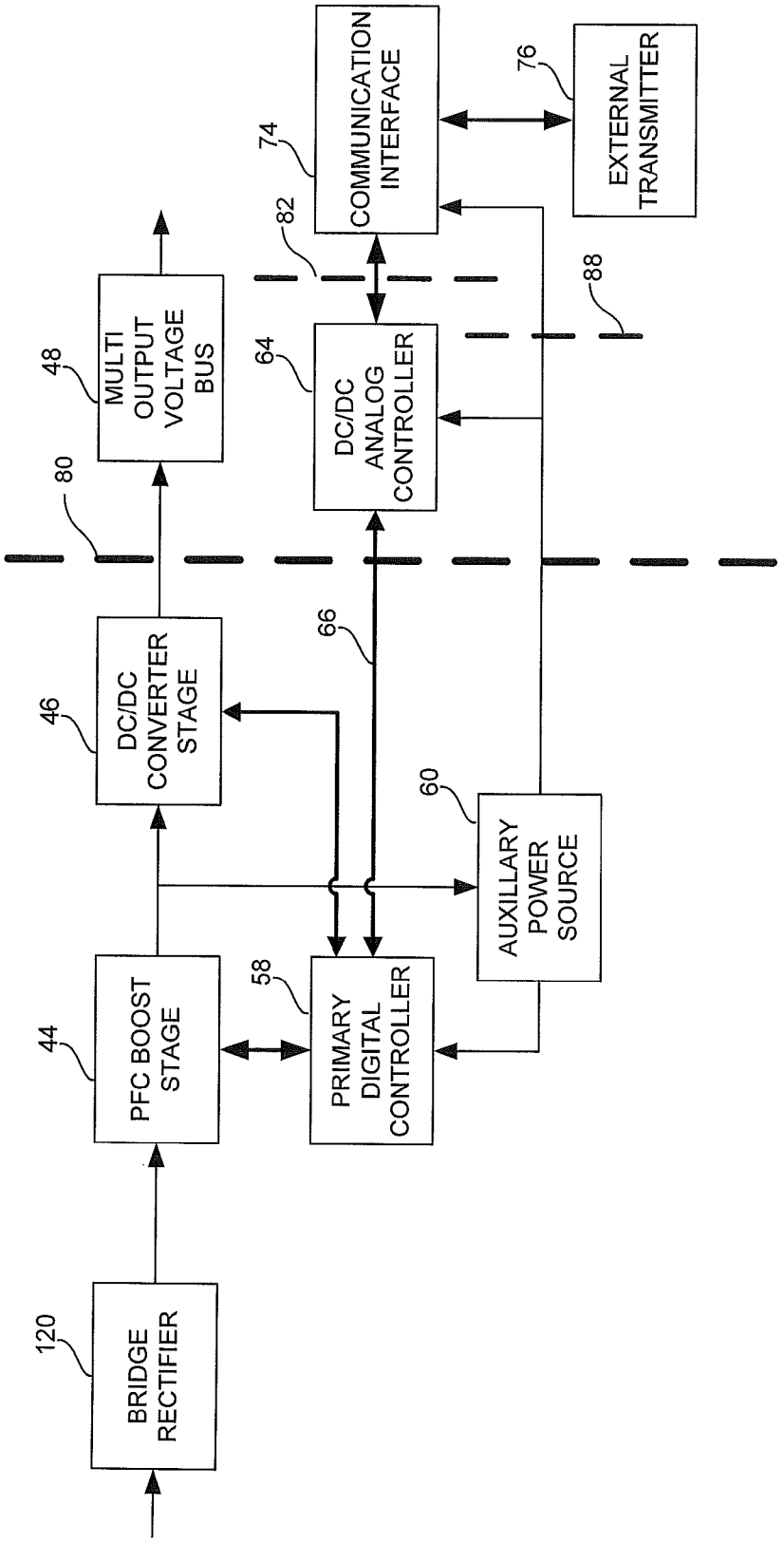
120
BRIDGE RECTIFIER
44
PFC BOOST STAGE
46
DC/DC CONVERTER STAGE
48
MULTI OUTPUT VOLTAGE BUS
80
58
PRIMARY DIGITAL CONTROLLER
66
60
AUXILLARY POWER SOURCE
64
DC/DC ANALOG CONTROLLER
82
74
COMMUNICATION INTERFACE
88
76
EXTERNAL TRANSMITTER

FIGURE 10

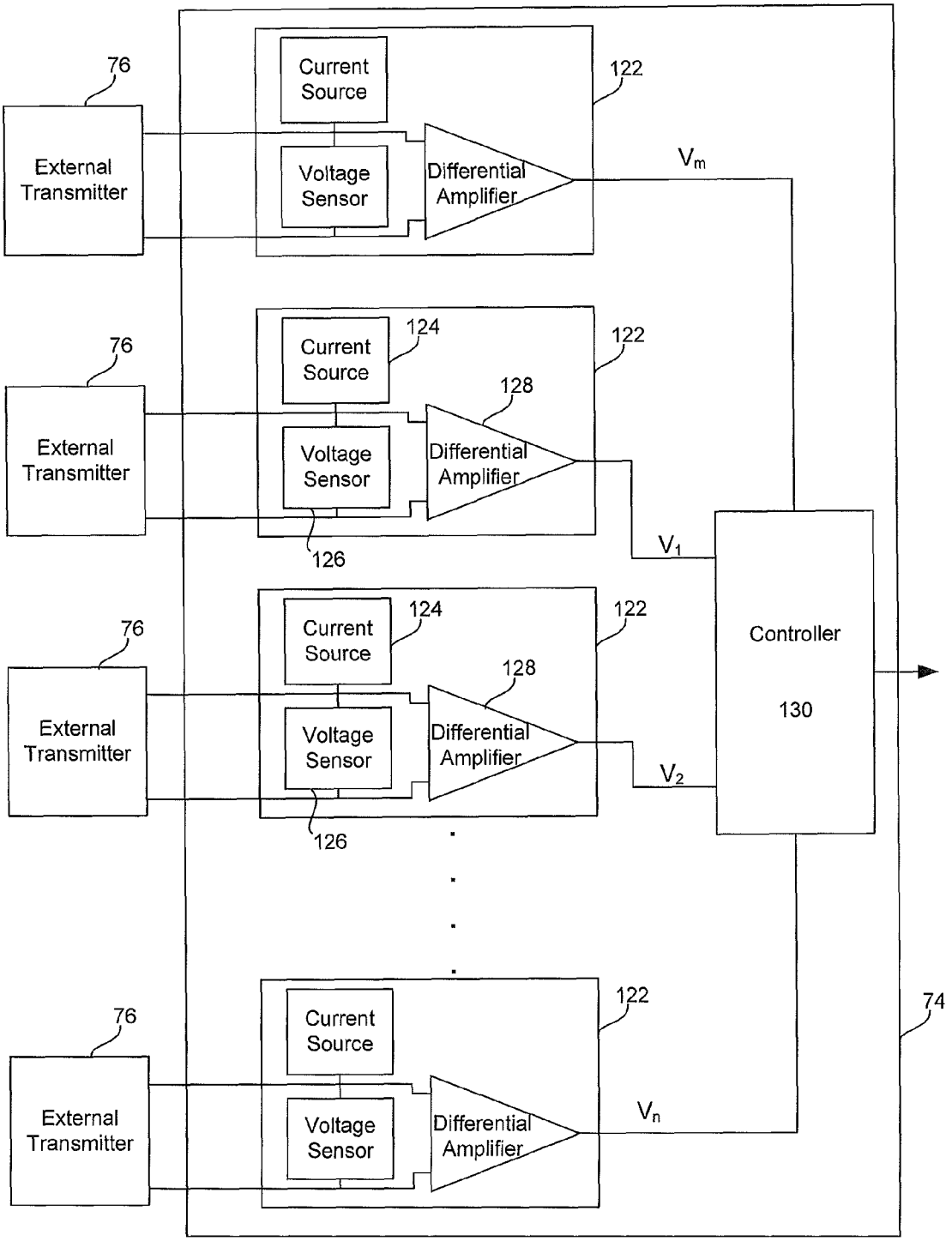
76
External Transmitter
Current Source
Voltage Sensor
Differential Amplifier
122
V_m
124
128
126
V_1
V_2
Controller
130
V_n
74

FIGURE 11

CONFIGURABLE LED DRIVER/DIMMER FOR SOLID STATE LIGHTING APPLICATIONS

CROSS-REFERENCE TO RELATED APPLICATIONS

This application is a continuation of U.S. patent application Ser. No. 13/941,871, filed Jul. 15, 2013, which is itself a continuation of U.S. patent application Ser. No. 13/059,336, now U.S. Pat. No. 8,525,446, filed Feb. 16, 2011, which is a national stage filing under 35 U.S.C. 371 of International Patent Application PCT/CA2009/001295, filed on Sep. 17, 2009, which claims the benefit of priority of U.S. Provisional Application No. 61/097,963, filed Sep. 18, 2008, all of which are incorporated herein by reference.

BACKGROUND OF THE DISCLOSURE

With the rapid increase in light emitting diode (LED) efficacies for high powered LEDs, the latest technologies have exceeded incandescent and halogen sources and are now starting to compete with fluorescent, mercury vapour, metal halide and sodium lighting. In addition to better energy usage, LEDs also have considerable advantages over traditional light sources such as long life, better durability and improved color generating abilities. The advancement of LED technology by various manufacturers has produced high power LEDs with various recommended drive currents such as 350 mA, 500 mA, 700 mA, 1000 mA, and 1400 mA or higher.

In recent years, controllable power sources for Solid State Lighting (SSL) applications have entered the market with integrated features. In addition, digital controllers within power sources have enabled the development of configurable options to provide a wider flexibility of solutions for Solid State Lighting applications. The ability to dim the light output of LEDs is also important to reduce energy consumption.

However, lighting companies are faced with considerable challenges in adopting SSL technology due to their unfamiliarity and lack of expertise in the driving and dimming requirements for LEDs.

Therefore, there is provided a novel LED Driver/dimmer for solid state lighting applications.

SUMMARY OF THE DISCLOSURE

With the wide variety of communication interface options and LED drive currents available for numerous architectural and entertainment Solid State Lighting applications, the configurable LED Driver/dimmer of the current disclosure includes at least one of the following advantages: configurable output current options that maximize the available power in the "front end" PFC and isolated power conversion converter stage; multiple drive current options for the multiple LED drive current options for various LEDs; elimination of a cooling fan which can present issues with audible noise and flexibility in where the power source is located, relatively low standby power consumption during "black out" lighting conditions, where "black out" refers to no load operation on the output of the dimmer/driver; multiple communication interface options; the ability to map output current sources/channels to different DMX512A addresses and the ability to configure multiple groups of output current sources/channels such that each group is controlled by one 0-10 Vdc analog signal.

Some embodiments of the present disclosure are directed to a highly efficient enclosed, configurable power source, controllable by various external communication interfaces and a method for driving and dimming LEDs or OLEDs in lighting fixtures such as used for architectural or entertainment lighting applications. Such applications can include, but are not limited to, theater, convention centers, cruise ships, architectural building features, amusement parks, museums, and hospitality lighting in restaurants and bars.

In one aspect of the present disclosure, there is provided a configurable light emitting diode (LED) driver/dimmer for controlling a set of light fixture loads comprising: a power circuit; a primary digital controller for controlling the power circuit; a set of output current drivers, each of the set of output current drivers connected to one of the set of light fixture loads for controlling the associated light fixture load; a secondary digital controller for controlling the set of output current drivers; wherein the secondary controller transmits LED control information to control outputs of the set of output current drivers; and wherein the secondary digital controller provides digital feedback control information to the primary digital controller.

In another aspect of the present disclosure, there is provided a configurable power source that provides a plurality of output channels, such as 6, 8, 9, or 12, to color change or dim OLED or LED loads. In color changing applications, the number of available channels is a multiple of three or four to accommodate either red/green/blue LED loads or red/green/blue/amber or white LED loads. The number of output channels and available output power is increased or maximized based on the LED current requirements. The output channels are programmable by means of in circuit serial programming (ICSP) ports and calibrated by a secondary digital controller to the required output current and other parameters such as dimming frequency range.

In another embodiment, the dimming of multiple monochromatic color or white LED loads (output channels) utilizing a single 0-10 Vdc analog control signal, or the control of groups of LED loads (output channels) with an associated 0-10 Vdc analog control signal for each group is contemplated.

In another aspect of the present disclosure, the output channels are digitally controlled current sources configurable for various peak currents to power and control a variety of LEDs. The LED average current is encoded within the three variables of on-time, off-time, and period whereby no three variables are held constant. Depending on the output drive currents of the LED loads, the number of available output channels is maximized based on the maximum output power available from the power factor and isolated DC/DC converter stages.

In another aspect of the present disclosure, the configurable power source is housed in a rectangular enclosure with a monolithic aluminum extrusion and a U shaped aluminum chassis and metal end plates. Various electrical components are thermally coupled to the heatsink to increase or maximize heat transfer to the outside surface of the enclosure.

In another aspect of the present disclosure, the power source includes a digital controller to decrease power consumption of a relay coil as part of an inrush current limit circuit to reduce power consumption and improve efficiency.

In another aspect of the present disclosure, the power source utilizes an independent efficient auxiliary power source and one or more digital controllers to provide power to the communication interface. A digital controller disables various electrical circuits during black out lighting conditions to reduce no load power consumption and improve efficiency.

BRIEF DESCRIPTION OF DRAWINGS

Embodiments of the present disclosure will now be described, by way of example only, with reference to the attached Figures, wherein:

FIG. **1** is a perspective view of a configurable LED Driver/dimmer;

FIGS. **2***a* and **2***b* are cross-sectional views of the configurable LED Driver/dimmer;

FIG. **2***c* is a schematic view of an internal layout of the LED Driver/dimmer;

FIG. **3** is a schematic block diagram of the configurable LED Driver/dimmer;

FIG. **4** is a schematic diagram of a prior art inrush current limit circuit;

FIG. **5** is a schematic diagram of an embodiment of a novel inrush current limit circuit for use with the configurable LED Driver/dimmer;

FIG. **6** is a schematic diagram of an embodiment of an output current driver;

FIG. **7** is a schematic diagram of another embodiment of the output current driver;

FIG. **8** is a schematic block diagram of another embodiment of the configurable LED Driver/dimmer;

FIG. **9** is a schematic diagram of a prior art multistage power source;

FIG. **10** is a schematic diagram of an embodiment of a novel multistage power source; and

FIG. **11** is a schematic diagram of a communication interface for use with the configurable LED Driver/dimmer.

DETAILED DESCRIPTION OF PREFERRED EMBODIMENT

In general, the present disclosure is directed at a method and apparatus for providing a configurable LED Driver/dimmer. In the current description, the Driver/dimmer will be referred to as a dimmer, however, it will be understood that the configurable apparatus can function as either a driver, a dimmer or both. In the preferred embodiment, the dimmer is used for Solid State Lighting (SSL) applications.

Turning to FIG. **1**, a perspective view of an LED dimmer is shown. The LED dimmer **10** includes a body portion **12**, or housing, which includes a monolithic aluminum heatsink **14** and a U-shaped chassis **16**. Cross-sectional views of the dimmer **10** are provided in FIGS. **2***a* and **2***b*.

The dimmer **10** further includes a front plate **18** which includes a plurality of ports **20** along with a set of conductor cables **22**. The front plate **18** is fastened to the body portion **12** via a set of fasteners **24**, such as screws. In this embodiment, as conductor cables are used to provide output power to LED/OLED loads, the space requirement for the front plate **18** is reduced with respect to other known connection means such as terminal blocks.

Turning to FIGS. **2***a* and **2***b*, a pair of cross-sectional views of the LED dimmer are provided. FIG. **2***c* is a schematic view of one embodiment of an internal layout of the dimmer **10**. The cross-sectional views for FIGS. **2***a* and **2***b* are taken along lines A-A and B-B of FIG. **2***c* respectively.

As shown, the heatsink **14** includes a receptacle portion **26** for receiving the ends of the chassis **16**. In order to increase, or optimize, the heat dissipation capability of the configurable dimmer **10** at full output power, the extruded aluminum heatsink **14** includes fins **28** to increase the surface area for heat dissipation. The heatsink **14** also has a mounting platform **30** for receiving power components, or semiconductors **32**, such as a bridge rectifier, MOSFETs, and/or diodes to efficiently transfer heat to the outside surface of the heatsink **14**. These components will be discussed in more detail below with respect to FIG. **3**. A power factor inductor and main isolation transformer pair **34** are thermally coupled to the chassis **16** by a thermally conductive, electrically isolated material **36** to further improve heat dissipation of these components. A circuit board **38** is also mounted to the heatsink **14**.

Turning to FIG. **3**, a block diagram of another embodiment of the LED dimmer is shown. The LED dimmer **10** includes an inrush current limit **40**, or inrush current limit circuit, which receives power from an AC power source or supply **42**, located external to the dimmer **10**. The inrush circuit **40** is connected to a Power Factor Correction (PFC) Boost **44** which, in turn, is connected to a DC/DC Converter **46**, or power conversion stage. The converter **46** is connected to an Output Voltage bus **48** which is connected to a power limiter **50**. The inrush circuit **40**, the PFC boost **44**, the DC/DC converter **46**, the Output Voltage bus **48** and the power limit **50** can be seen as a power circuit **47**. Although only one power limit **50** is shown, it will be understood that there could be multiple power limits. The power limiter **50** is connected to a set of output current drivers **52**, whereby each of the output current drivers **52** has an associated in-circuit serial programming (ICSP) port **54**. The output of the output current drivers **52** is connected to individual Organic Light-Emitting Diodes (OLED)/Light-Emitting Diodes (LED) loads **56**, further referred to as LED loads.

Along with the above-identified components and circuitry, the dimmer **10** further includes a primary digital controller **58** which is connected to an auxiliary power source **60** and an ICSP Port **62**. The primary digital controller **58** is further connected, via an isolated communication bus **61** to a secondary digital controller **64**, which receives power from the auxiliary power source **60**. An ICSP port **68** is also connected to the secondary digital controller **64**.

The auxiliary power source **60** is also used to power an interface component **70** which includes an optional address selector **72** and a communication interface **74**. The communication interface **74** receives inputs from an external transmitter **76** and communicates via an isolated serial communication bus **78** with the secondary digital controller **64**. A set of isolation barriers **80** and **81** are located within the dimmer **10**, each barrier separating various components of the dimmer **10** from each other.

As will be understood, not all of the components or connections of the LED dimmer **10** required for operation are shown as they will be understood by one skilled in the art. For instance, the dimmer **10** can also include an EMI filter and a bridge rectifier. With respect to connections, it will be understood that the primary digital controller **58** can also be connected to the PFC boost **44**, the inrush current limit **40** and the DC/DC converter **46** while the secondary digital controller **64** can be connected to the output voltage bus **48**, the power limit **50** and the output current drivers **52**.

In operation, the PFC Boost **44** and DC/DC Converter **46** are controlled by the primary side digital controller **58** while the secondary digital controller **64** monitors the output voltage bus **48** and provides digital feedback control information via isolated communication bus **61** to regulate the output voltage bus **48**. Secondary digital controller **64** also translates dimming and/or color mixing information from the external transmitter **76** into LED control information for the output current drivers **52**. The primary **58** and secondary **64** digital controllers and output current drivers **52** have an associated programming port for further configuring the LED dimmer **10**.

Turning to FIG. **4**, a prior art inrush current limit is shown. In order to limit inrush current limit during initial start up of the power source, one approach is to utilize a negative temperature coefficient thermistor (NTC) in parallel with a relay contact. During initial turn on of the power source, the NTC thermistor limits the inrush current. When the PFC boost stage bulk capacitor is charged, and before the PFC stage is enabled by the primary controller, the primary controller closes the relay contact to bypass the NTC thermistor. This is accomplished by applying a DC voltage via a switch across the coil in the relay.

A limitation of this approach is the power consumption of the relay coil when a continuous DC voltage is applied. This power consumption becomes significant in terms of Energy Star requirements during no load or standby operation such as when a "black out" or minimum light intensity state is received by the communication interface.

Turning to FIG. **5**, an embodiment of an improved inrush current limit **40** is shown. An EMI filter **82** is connected between the power supply and the current limit **40** and is connected directly to the PFC boost **44** and via the current limit **40**. The current limit **40** includes a thermistor **84**, a relay or relay contact **86** and a switch **59**. The relay contact **86** is connected in parallel with the thermistor **84**. A typical relay coil requires greater energy to close the contacts than is required with the currently described limiter **40** to maintain the contacts in a closed position since less holding force is required. After the relay contacts have been closed by applying a voltage of 12 Vdc, modulation of the relay coil voltage can be initiated by the primary controller **58** to effectively reduce the average voltage across the coil to approximately 5 volts versus a DC voltage of 12V, reducing power consumption. It should be noted that the pulse duty cycle and frequency can also be changed to improve or optimize performance.

In one embodiment, the primary controller **58** pulses the DC voltage across the relay coil via the switch **59** to reduce power consumption.

In one embodiment, for the PFC boost **44**, as shown in FIG. **3**, the PFC Boost **44** utilizes a boost topology with an input AC voltage mains range of 103 Vac to 300 Vac from the AC supply **42**. Energy stored in an inductor within the PFC boost **44** is transferred and stored in the bulk capacitor on a cycle by cycle switching basis at a loosely regulated 430V DC over the input range. The energy is controlled in a manner that forces AC input current to be sinusoidal and in phase with the AC line voltage. By drawing current in phase with the input mains voltage **42**, the amount of harmonic currents of the fundamental AC mains frequency being introduced into the power line is reduced.

For the DC/DC convertor **46** and the output voltage bus **48**, the preferred embodiment for the DC/DC converter **46** is derived from the isolated buck converter topology and comprises a galvanically isolated full bridge converter employing a primary side phase modulation technique with a secondary side current doubler rectifier circuit.

The full bridge converter parasitic circuit elements in conjunction with primary magnetization current and reflected inductor ripple current cause resonant edge switching transitions on the MOSFET switch thus forcing zero voltage across the MOSFET switching device before turn on. The result is higher efficiency due to the elimination of Coss (drain to source MOSFET Capacitance) switching losses, reduction of gate charge across the Miller capacitance and minimized power loss during switching transitions when voltage and current are changing simultaneously.

Since the output of the DC/DC converter is a tightly regulated DC bus **48**, the set of power limit circuits **50** are coupled to either one or more current drivers **52** to limit the power output of each of the output current drivers. **52** The power limit circuits **50** each include a current sensor that is monitored by the secondary controller **64**. In the event of a single component failure within the output current driver module, the power limit circuits **50** limit the energy to the loads in accordance with the UL standard 1310 Class 2. Supplementary protection to the power limit circuits can also include one or more fuses.

For the primary digital controller **44**, the controller **44** provides digital feedback control for the PFC Boost **44** and DC/DC Converter **46**. The digital feedback method for the PFC Boost **44** utilizes average current mode control with duty cycle feed forward for the inner current loop and voltage mode control for the outer control loop. The DC/DC Converter **46** utilizes voltage mode control for the digital control loop.

The primary digital controller **44** also controls the inrush current limit circuit **40**, provides primary current limit protection, and over voltage protection for the output of the PFC Boost **44**. The primary digital controller **44** also disables the PFC Boost **44** and the DC/DC Converter **46** during black out or no load conditions to reduce power dissipation.

With respect to the output current drivers **52**, configuring the required number of outputs and required output current is accomplished by populating the appropriate sections of a single printed circuit board with the appropriate electrical components and programming the output current driver via the in-circuit serial programming (ICSP) ports **54**.

Turning to FIG. **6**, which is an embodiment of an output current driver, the output current driver **52** comprises a load controller **90**, a current source **92**, and current sense **94**. Although only one current driver **52** is shown, it will be understood that multiple are present as reflected in FIG. **3**.

The output current driver utilizes the dimming/color mixing techniques for LEDs described in detail in U.S. Patent Publication No. 2007/0103086, which is hereby incorporated by reference, wherein the LED average current is encoded within the three variables of on time, off time, and period where by no three variables are held constant.

The secondary controller **64** receives dimming or color mixing information in the form of a serial data stream from the external transmitter **76** via the communication interface **74** and then translates the data stream into LED control information. The LED control information is transmitted to the load controller **90** in the form of instructions to generate a digital signal **98** and an analog signal **100**.

The load controller **90** further comprises a signal generator **102** which transmits the digital signal **98** and the analog signal **100** to the current source **92**. The digital control signal **98** and the analog signal **100** are preferably generated via a digital control algorithm and 1 Bit algorithm, respectively.

The current source **92** preferably includes ancillary circuitry for operation and comprises a buck topology power stage with hysteretic control. The current sense **94** provides a digital feedback loop for each current source **92**. In the preferred embodiment, the current source **92** is a buck circuit topology however other embodiments can include topologies such as boost, buck-boost, or single ended primary inductor converter (SEPIC).

Output **104** of the current driver **52** provides a current pulse via current source **92** to the LED Load **56** whereby on times, off times, and period are not held constant.

Each output current driver **52**, has an associated in-circuit serial programming (ICSP) port **54**. The ICSP port **54** pro-

vides access to the load controller **90** such that firmware updates are possible to permit the configuration of the output current drivers **52**. The ICSP port(s) **54** for the output current driver(s) **52** can be located on the printed circuit board assembly of the apparatus or they can be located on the outside of the enclosure.

The configuration options include, but are not limited to, such parameters as the adjustment of the frequency range of the dimming current pulse for the range of light intensity output or the set point adjustment of the peak on time output current.

For example, it might be necessary to increase the frequency range of the dimming current pulse in video recording applications where the dimming current pulse frequency can be programmed for a 2000 Hz to 2500 Hz range. This would negate a visible beat frequency effect that would other wise be noticeable on recorded video. There can be other applications where the adjustment of the dimming current frequency range is required to reduce EMI effects.

The default peak output current set point is programmed via the ICSP port **54** which provides flexibility in the number of possible LEDs types that can be driven and is typically dependent on the recommended operating current specified by the manufacturer such as 350 mA, 700 mA, etc. The set point current is preferably programmed to within 4% of the manufacturer's specification. The peak output current set point can then be precisely calibrated to within typically 1% via the secondary controller **64** during factory calibration.

An alternate embodiment of an output current driver **52** is shown in FIG. **7**. In this embodiment, the output current driver **52** comprises a load controller **110** including a signal generator **112**. A current source **114** and a current sense **116** are located within an apparatus **118**, such as a light fixture. The light fixture **118** also includes the LED load **56**. After receiving the LED control information from the secondary controller **64**, the signal generator **112** provides a data signal to the light fixture **118** to operate the LED load **56** via the current source **114** and the current sense **116**. This is also schematically shown in FIG. **8**.

FIG. **8** is a schematic diagram of an alternate embodiment of a configurable LED dimmer **10**. As shown, individual current sources **114** and current senses **116** are mounted in the light fixture containing the LED load **56**, and power and data signals are provided to each output current source **114** by the multi conductor cable **22**. In this embodiment, the current sources **114** are configured to regulate to a predetermined peak current. The load controller **110** transmits the data signal containing the output current information encoded within the three variables of on time, off time, and period whereby no three variables are held constant.

Turning to FIG. **9**, a known application of internal auxiliary power requirements in a multistage power source is shown and illustrates how auxiliary power is provided to the various blocks of a multistage power source. P**1**, P**2** . . . P**10** represents the various power and voltage transfer requirements for each functional block. For simplicity, the various voltage regulator and filter circuits required for each of the power outputs have been omitted.

In operation, the bridge rectifier converts the AC mains voltage P**1** to a rectified voltage P**2**. A portion of power P**6** from the output of the bridge rectifier P**2** is supplied to the start up circuit. The start up circuit is comprised of a power transistor or MOSFET and is intended to provide power P**8** to the PFC analog controller for only a short duration of a few seconds. Power P**8** to the PFC analog controller will allow the PFC Boost stage to begin switching, providing power P**10** to the DC/DC controller, and power P**3** to the DC/DC converter power stage. Since the start up circuit dissipates an excessive amount of power, it is turned off by the voltage component of P**7** supplied by the PFC boost stage. The P**7** power is permitted to 'flow through' the start up circuit to continue to supply power P**8** to the PFC analog controller.

The output of the DC/DC Analog Converter provides power P**4** to the multi output voltage bus, power P**9** to the Communication Interface, and the Output Current Drivers by means of P**5**.

In this implementation, the PFC and DC/DC Controllers are typically analog controllers. It should be noted that in this implementation, in order for the communication interface to continually receive dimming information from an external transmitter, the DC/DC Converter stage must remain turned on. Similarly, in order for the DC/DC converter stage to provide power P**4**, the PFC Boost stage must remain on.

In a 'black out' state, the communication interface may receive a "0" intensity value out of 255 intensity levels for all of its output current drivers via the external transmitter such as a DMX512A or RDM controller interface, or it may receive an analog voltage of between 0 to 1V via a controller compliant to ESTA E1.3-2001 or IEC60929 as one of many communication interface options. In this 'black out' state, the DC/DC Converter and PFC Boost Stage continue to dissipate an excessive amount of power.

FIG. **10** is directed at an embodiment of an improved internal auxiliary power distribution in a multistage power source for providing auxiliary power to the various blocks of a multistage power source. For simplicity, the various voltage regulator and filter circuits required for each of the power outputs have been omitted. The transfer of power from AC mains to the Output Current Drivers (**52**) is unchanged. This embodiment shows an improved implementation of an independent auxiliary power source providing power to the primary digital controller **58**, the secondary digital controller **64**, and the communication interface **74**. The auxiliary power source **60** comprises an efficient isolated flyback topology with a wide input voltage range and pulse skipping capability to minimize its power dissipation at light loads or no load conditions. In other words power can be provided to the primary digital controller **58**, the secondary digital controller **64**, and the communication interface **74** via an auxiliary flyback converter.

A 'black out' state received from the external transmitter **76** to the communication interface **74** is communicated to the secondary digital controller **64** and then the primary digital controller **58** via the isolated communication bus **66**. The primary digital controller **58** then disables the PFC Boost Stage **44** and DC/DC Converter Stage **46** reducing overall power dissipation of the configurable power source.

It should be noted that even when the PFC Boost **44** is disabled, power can continue to be supplied to the auxiliary power source **60** since rectified voltage from a bridge rectifier **120** can continue to peak charge the PFC boost **44** through an internal capacitor via the boost diode.

The auxiliary power source **60** continues to provide power to the primary digital controller **58**, secondary digital controller **64**, and communication interface **74** in order to be able to 'listen' for or sense a change in light intensity state that may be communicated by the external transmitter **76**.

Alternate embodiments can include additional ancillary circuits that can be powered by the independent auxiliary power source that can be disabled by a controller to reduce over all power dissipation in black out or no load conditions.

With respect to the communication interface **74**, the communication interface **74** comprises a removable and interchangeable module with each module adapted for different

control options such as DMX512A, RDM, 0-10 Vdc and Zigbee. Operation of the communication interface with such control options will be understood by one skilled in the art.

The communication interface module receives lighting control information via the external transmitter **76** and converts the various protocols into a serial data stream. It then transmits this data by means of a Universal Asynchronous Receiver Transmitter (UART) to the secondary digital controller **64** via the isolated serial communication bus **78**. The isolated serial communication bus **78** is comprised of a isolation barrier **82** to "float" the communication interface and prevent ground loops.

Turning to FIG. **11**, an embodiment of the communication interface is shown. In this embodiment, an analog interface module adapted for 0-10 Vdc IEC60929 or ESTA E1.3-2001 dimming methods as the communication interface **74** is shown. The analog interface module can be adapted to receive one or more analog control voltages from one or more associated external transmitters **76**. The external transmitter **76** is preferably an electronic resistor or potentiometer that sinks current from the current source located on the analog interface module and outputs a variable 0-10 Vdc control voltage proportional to the required light intensity.

Individual external transmitters **76** supply signals to various controls **122** within the communication interface **74**. Each control **122** is representative of an area or group of LED loads **56**. Within each control **122** is a current source **124**, a voltage sensor **126** and a differential amplifier **128**. The differential amplifier **128** senses a voltage across the voltage sensor **126** and converts this into a correlated voltage (Vm, V**1**, V**2** . . . Vn) supplied to a controller **130**. The controller **130** converts this analog voltage into a serial data stream for transmission to the secondary digital controller **64** via the isolated serial communication bus **78**.

The communication interface **74** can be configured to have one 0-10 Vdc control voltage simultaneously control via the secondary digital controller **64**, all output current drivers **52** and LED loads **56**. This application is beneficial in monochromatic color or white lighting applications since only one control signal and associated wiring is required to control multiple light loads.

Furthermore, the communication interface **74** can be adapted to have one or more 0-10 Vdc signal voltages control an associated group of one or more output current drivers in zonal dimming applications. An optional master 0-10 Vdc signal voltage could be able to simultaneously control all of the individual groups of output current drivers.

In applications not requiring the complexity of DMX512A, these analog control options are beneficial in red/green/blue or red/green/blue/amber color changing or monochromatic color or white light applications whereby the addressability and corresponding control of individual LED light loads is not required.

With respect to the secondary digital controller **64**, the controller **64** monitors and transmits digital output voltage bus information (feedback loop) via the two way isolated serial communication bus **78**, decodes the serial data from the communication interface **74**, and transmits control information to the output current drivers **52**. As a protection feature, the secondary controller **64** also monitors output currents from the power limit stages **50** supplied to the output current drivers **52**

The secondary digital controller **64** includes the ICSP port **68** to program and calibrate the output voltage bus **48** to the required voltage. In DMX512A applications, the ICSP port **68** also allows for the mapping of each of the output channels to a wide variety of addresses. Similarly, in 0-10 Vdc analog control applications, the secondary digital controller ICSP port allows for the mapping of output channels into groups for each associated 0-10 Vdc control signal.

This mapping capability is particularly useful in addressable-networked lighting systems using a DMX512A control protocol where different lighting zones are required to respond to different illumination information. For example, in a 12 channel output configuration, the first 6 channels could be mapped to the DMX base address of the power source (i.e. DMX01) and the last 6 channels could be mapped to DMX address +1 (i.e. DMX02).

This mapping capability is also useful in zone dimming applications using 0-10 Vdc analog controls as the communication interface. For example, a 12 channel output LED dimmer configuration can have 7 output channels grouped for a first associated 0-10 Vdc signal, the next 3 channels can be grouped to a second associated 0-10 Vdc control signal, and the last 2 channels can be grouped to a third associated control signal.

Embodiments of the disclosure can be represented as a software product stored in a machine-readable medium (also referred to as a computer-readable medium, a processor-readable medium, or a computer usable medium having a computer-readable program code embodied therein). The machine-readable medium can be any suitable tangible medium, including magnetic, optical, or electrical storage medium including a diskette, compact disk read only memory (CD-ROM), memory device (volatile or non-volatile), or similar storage mechanism. The machine-readable medium can contain various sets of instructions, code sequences, configuration information, or other data, which, when executed, cause a processor to perform steps in a method according to an embodiment of the disclosure. Those of ordinary skill in the art will appreciate that other instructions and operations necessary to implement the described disclosure can also be stored on the machine-readable medium. Software running from the machine-readable medium can interface with circuitry to perform the described tasks.

The above-described embodiments of the disclosure are intended to be examples only. Alterations, modifications and variations can be effected to the particular embodiments by those of skill in the art without departing from the scope of the disclosure, which is defined solely by the claims appended hereto.

What is claimed is:

1. A configurable light emitting diode (LED) driver for powering a set of light fixture loads comprising:

a power circuit including:

an inrush current limit,

an apparatus for power factor correction and DC/DC conversion, and

a regulated output voltage bus connected to the apparatus for power factor correction and DC/DC conversion;

a primary controller for controlling the power circuit;

a set of output current drivers, each of the set of output current drivers connected to one of the set of light fixture loads for powering the connected light fixture load; and

an apparatus for mapping the set of output current drivers to various dimming zones and for mapping output channels into groups.

2. The LED driver of claim **1** wherein the apparatus for mapping comprises:

a secondary controller; and

a port for mapping the output channels into groups.

3. The LED driver of claim **2** wherein the output channels are mapped for DMX512A control.

4. The LED driver of claim **2** wherein the output channels are mapped for 0-10 Vdc analog control.

5. The LED driver of claim **2** wherein the port is an in-circuit serial programming (ICSP) port.

6. The LED driver of claim **1** further comprising a communication interface for receiving data from an external transmitter.

7. The LED driver of claim **6** wherein the communication interface is DMX512A, 0-10 Vdc analog control, Zigbee wireless or remote device management (RDM) compatible.

8. The LED driver of claim **2** further comprising a communication interface for receiving data from an external transmitter.

9. The LED driver of claim **8** wherein the communication interface includes a universal asynchronous receiver/transmitter (UART) to transmit data to the secondary controller.

10. The LED driver of claim **8** further comprising an auxiliary flyback converter to provide power to the primary controller, the secondary controller, and the communication interface.

11. The LED driver of claim **10** wherein the primary and secondary controllers are digital controllers.

12. The LED driver of claim **1** wherein the light fixture load is one of an Organic LED (OLED) load or an LED load.

13. The LED driver of claim **12** wherein the primary and secondary controllers are digital controllers.

14. The LED driver of claim **1** further comprising a housing with a heatsink portion for housing the components of the LED driver.

15. The LED driver of claim **14** wherein the heatsink comprises fins.

16. The LED driver of claim **1** wherein the apparatus for power factor correction and DC/DC conversion comprises:

a DC/DC converter; and

a power factor correction (PFC) boost connected to the inrush current limit and the DC/DC converter.

17. The LED driver of claim **16** further comprising at least one power limit connected to the regulated output voltage bus.

18. The LED driver of claim **1** further comprising a set of isolation barriers to separate components of the driver from each other.

19. The LED driver of claim **1** wherein each of the set of output current drivers comprises:

a load controller;

a current source; and

a current sense.

20. The LED driver of claim **19** wherein the load controller comprises a signal generator.

* * * * *