A Review of LED Drivers and Related Technologies

Yijie Wang, *Senior Member, IEEE*, J. Marcos Alonso, *Senior Member, IEEE*, and Xinbo Ruan, *Fellow, IEEE*

***Abstract*—Light-emitting diode (LEDs) have a promising prospect because of its outstanding advantages: 1) long lifetime, 2) environmentally friendly, 3) flexibility of color mixing, 4) high illumination efficiency, etc. Based on the electrical characteristics of LEDs, a constant current driver is needed to support the LED working performance. With the wide applications of LEDs, many new technologies are presented. In this paper, advantages and disadvantages of different LED drivers are discussed. A detailed technology review is presented which is good for researchers and engineers to make right choices in design and selection of LED drivers.**

***Index Terms*—DC–DC converter, light-emitting diode (LED) drivers, power factor correction (PFC).**

I. Introduction

IN THE case of global warming and resource depletion, the energy problem has become a global challenge. The global statistics illustrate that about 30% of total energy consumption and 60% of electricity consumption are spent on buildings as shown in Fig. 1. Furthermore, lighting is one of the main consumption of building electricity and how to improve the efficiency of lighting is a problem to be solved.

Light-emitting diode (LED) lightings are expected to become a major kind of light source for the coming decades because of its high luminous efficacy as shown in Table I. Besides, compared with other traditional lighting sources, with their unique physical structure, electrical, and optical characteristics, LEDs have their own advantages. For example:

Manuscript received October 7, 2016; revised December 15, 2016; accepted January 4, 2017. Date of publication March 2, 2017; date of current version June 9, 2017. This work was supported in part by the National Natural Science Foundation of China under Grant 51407044, in part by the Fundamental Research Funds for the Central Universities under Grant HIT.BRETIII.201510, in part by the China Postdoctoral Science Foundation under Grant 2014M550187 and Grant 2015T80348, in part by the Research and Development of Applied Technology Projects in Heilongjiang Province under Grant GA13A403, and in part by the Power Electronics Science and Education Development Program of the Delta Environmental and Educational Foundation (DREG2015011).

Y. Wang is with the School of Electrical Engineering and Automation, Harbin Institute of Technology, Harbin 150001, China (e-mail: wangyijie@hit.edu.cn).

J. Marcos Alonso is with the Department of Electrical Engineering, University of Oviedo, 33204 Oviedo, Spain (e-mail: marcos@uniovi.es).

X. Ruan is with the College of Automation Engineering, Nanjing University of Aeronautics and Astronautics, Nanjing 211106, China (e-mail: ruanxb@nuaa.edu.cn).

Color versions of one or more of the figures in this paper are available online at http://ieeexplore.ieee.org.

Digital Object Identifier 10.1109/TIE.2017.2677335

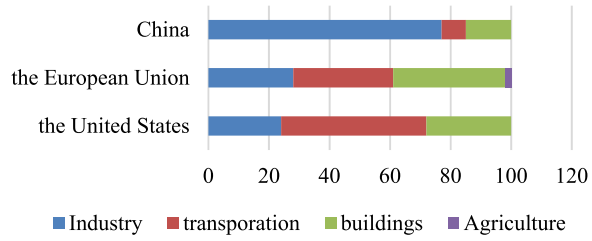

Fig. 1. Energy consumption of several countries and regions [1]–[3].

TABLE I
EFFICIENCY OF SEVERAL LAMPS

Lamps	Efficacy (lm/W)
White LED (0.1 W)	180
H.P.Na (400 W)	132
Metal halide (35 W)	90
Fluorescent (40 W)	90
CFL (6 W)	45
Halogen incandescent (100 W)	20
Incandescent (40 W)	13

1) energy saving, 40% electricity is transformed to light;
2) long life span, more than 100 000 hours;
3) fast response, the start time of LEDs is on nanosecond level;
4) solid-state encapsulation, belonged to cold light source;
5) environmental friendly, harmful elements such as Pb and Hg are not included;
6) proper color rendering index [4]–[7].

Besides, with the development of LED packaging and coating technology, the cost of LEDs decreased greatly and LEDs have been widely used in street lighting, screens, message signs, architectural lighting, and greenhouse lamps [8], [9], as shown in Fig. 2.

Generally speaking, the driver circuit plays a significant role in dominating the energy efficiency, which means the system efficiency can be further improved via an appropriate driver circuit. Traditional LED systems are based on single-stage or two-stage LED drivers. Single-stage LED driver is a dc/dc converter with constant output current that can obtain power factor (PF) correction (PFC) meanwhile, while two-stage system consists of a PFC circuit and a dc/dc converter as shown in Fig. 3(a) and (b). Besides, due to the unique characteristics of LEDs, a current loop is always included in the dc/dc stage in order to acquire constant current control. Moreover, in practical

0278-0046 © 2017 IEEE. Personal use is permitted, but republication/redistribution requires IEEE permission.
See http://www.ieee.org/publications_standards/publications/rights/index.html for more information.

ADVANCED LIGHTING CONCEPTS LLC - EX 1010

Authorized licensed use limited to: Winston Huff. Downloaded on July 29,2023 at 16:34:46 UTC from IEEE Xplore. Restrictions apply.

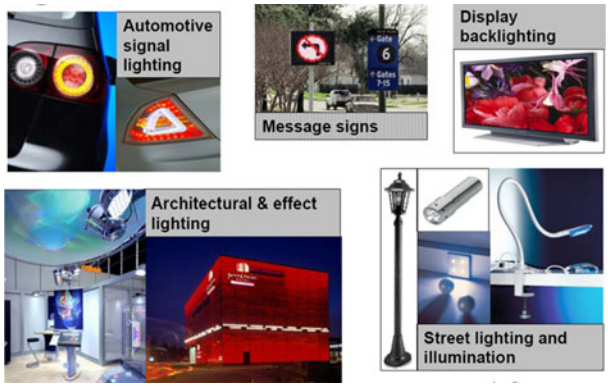

Fig. 2. Applications of LEDs.

applications when several strings of LEDs are adopted, a current balance stage may also be required. The advantage of the above two LED drivers is that they are easy to design with more accurate control. However, one of the drawbacks of single stage converters is the high value of the storage capacitor, which also increases the volume of the driver. As for the two-stage system more devices are needed, which means the cost is quite high and reliability is relatively low [10]–[12].

In recent years, many integrated-stage topologies are designed for the sake of efficiency and cost, as shown in Fig. 3(c). In order to obtain high PF and low total harmonic distortion (THD), a topology which performs PFC characteristics as PFC stage is usually chosen, and a dc/dc stage is selected according to the power level of the system. Due to the integration technology, the PFC stage and dc/dc stage can be simplified into to one stage by sharing active power switches and control circuits [13]–[15]. Therefore, cost and size of the system is reduced while ensuring high efficiency, high reliability, and fast output dynamics [16].

Similarly to the traditional lighting, an LED system should comply with associated luminaire standards and international regulations, and these standards and regulations pose basic requirements over LED systems such as PF and THD. One of the most common standards is Energy Star established by EPA in 1992 (shown in Table II). With these concerns, a general trend of LED system is high efficiency, high power density, low cost and long lifetime. Switched mode LED drivers can realize a better output current regulation and higher power density of system. For the LEDs applications, switched mode LED drivers satisfy the above application trend. Generally, LED driver topologies vary much depending on different power range. According to Energy Star, for LED lamp power smaller than 5 W, no minimum PF is required, that is to say, PFC stage can be saved for such LED driver. In practice, the topology of LED driver can also be selected according to other requirements, including PF, THD, cost, galvanic isolation, and efficiency.

In Section II, development and characteristics of LEDs are introduced. Then according to topologies of LED drivers, PFC cell, dc–dc cell and current balance cell are discussed in Section III. In Section IV, for practical lighting applications, some LED drivers in different topologies will be introduced. In Section V, some hot topics about issues in LED drivers are introduced in details. The major issues that will be discussed include: electrolytic-less capacitors, application of new power components, modeling of LEDs and organic light-emitting diodes (OLEDs) and improving of power density. Conclusion is shown in Section VI.

II. Characteristics and Development of LEDs

A. Development of LED

The origin of LED can date back to 1907 when Henry Joseph Round discovered electroluminescence effect with weak yellow light on carborundum (SiC) crystal for the first time [17], [18]. Later in 1927, a Russian Oleg Losev introduced the first genuine LED on Russian, German, and English science magazines [19]; however, as the luminous efficiency was quite low, the LED did not get practical application at that time.

In the 1950s, Gallium arsenide semiconductor was adopted as the material of electroluminescence effect. An actual LED was invented and it was available in 1960s. According to [20], the experimental condition was extremely severe at that time, LEDs needed to be placed in the liquid nitrogen because the efficiency was not high enough at room temperature. Moreover, the LEDs could only emit invisible infrared light.

It was not until 1962 when the first LED, which could emit visible red light, was made by an engineer Nick Holonyak working in General Electric Company [21]. This breakthrough was published in Applied Physics Letters and the same year Nick Holonyak was referred to as the "father of LED" by the newspapers [22].

In the development of LEDs, a high tide period appeared in the 1970s. During this time, the American Monsanto company research team invented red, orange, and green LEDs in succession [23], [24]. Later, vapor phase epitaxy was adopted to reduce the optical loss of p-n-junction, which greatly improved the efficiency of LEDs [25]. By the middle of 1970s, gallium phosphide (GaP) is used instead of gallium arsenide phosphide as light source obtaining the gray green light.

By the early 1990s, developers obtained red, orange, yellow, and green LEDs with AlInGaP. Finally, in 1994, Nakamura of Nichia company designed high-brightness blue LED based on InGaN. Then, white LEDs became available by mixing red, green, blue LED light, as shown in Fig. 4.

In conclusion, the development of LEDs almost lasted one century and acquired rapid and significant progress in the 1970s and 1990s, respectively. So far, the emission spectrum of LED has covered almost the whole visible spectrum area.

At the same time, the development of LED is not only its color but also its brightness. In the early time, LEDs could only be used on calculators and digital watches for display, but now LEDs can be found almost everywhere. For example, in the United States, the domestic traffic lights and the originally used filament lamps for automobile headlight have been replaced by LEDs gradually.

Up to now, there are many kinds of LEDs commercially available, which can be classified according to many standards such

Authorized licensed use limited to: Winston Huff. Downloaded on July 29,2023 at 16:34:46 UTC from IEEE Xplore. Restrictions apply.

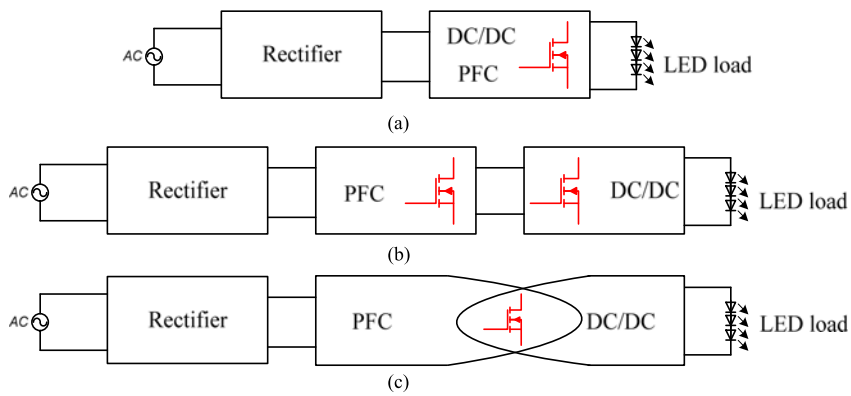

Fig. 3. Structure of LED drivers. (a) Single-stage. (b) Two-stage. (c) Integrated-stage.

as power level, applications, and colors. Among these LEDs, red-green-blue (RGB) LEDs and OLEDs are now being studied widely as hotspots [26], [27].

RGB LEDs are widely used in many applications such as biomedical apparatus [28], detector system [29], and especially LCD back lighting [30] because of its capability of generating instantly different colors. According to the LCD operation method, it is required that the white light is first filtered by red, green, and blue color filters to generate the corresponding monochromatic lights, which can then be compounded into polychromatic lights based on the content of the image data. Meanwhile, one drawback of phosphor-based white LED is that its color temperature is predetermined by the chemical composition of the phosphor used and not directly controllable by external means [31]. Therefore, RGB LEDs are the best choice as the backlighting light sources. Besides, compared with white LEDs, RGB LEDs offer a better color control flexibility and their color gamut is also increased by about 1.5 times [32], [33]. However, for RGB LEDs, the forward voltages for the red, green, and blue LEDs are different [34]; as a result, the challenge of RGB LEDs is how to control them with fast transition between different color LEDs.

Organic LEDs are based on the electroluminescence emitted by semiconductors made by organic compounds. As shown in Fig. 5, a thin layer of organic semiconductor is placed between two electrodes, where one of the electrodes is transparent to allow for the light emission. Application of an electric field causes electron and hole recombination in the semiconductor material, emitting light. The emitted color is controlled through chemical modification of the molecular structure.

OLEDs with the advantages of wide viewing angle, low-energy consumption, and the potential of being mechanically thin and flexible, are emerging on the lighting market, and are about to achieve the minimum performance required for commercial use especially on mobile devices [35]–[37]. Although OLEDs are available in the market, they are still very expensive and hard to obtain, so one challenge is seeking high-quality and low-cost production technology. On the other hand, the electrical behavior of OLEDs is quite different from traditional LEDs. For example, it has previously been shown that the current intensity affects the spectrum shape of white light OLEDs [38]. As a result, due to their very specific electrical behavior, OLEDs need dedicated drivers to be operated in accordance with the constraints of a specific application.

B. Electrical Characteristics of LED

The relationship between current and voltage of an LED can be expressed by the following equation:

$$I_F = I_S(e^{eV_F/\mathrm{K}T} - 1). \tag{1}$$

Here, I_F is the current of LED, I_s is the reverse saturation current, e stands for the electron charge, K is the Boltzmann constant, and T is the junction absolute temperature. It is obvious that the characteristic is the same as general purpose diode [39].

Fig. 6 shows the LED V-I characteristic. As can be seen, the voltage of LED is inversely proportional to temperature, specifically, when temperature increases, the voltage of LED decreases. If LED is supplied by a voltage source, when it works for a long time and temperature grows, the LED current will raise rapidly, which also causes the growth of temperature.

As a result, the current will increase until LED is burned if heat cannot be released in time. However, if a current source is adopted, the increase of temperature only causes the drop of voltage, which does not harm LEDs. Therefore, LEDs are always driven by a constant current source.

Loo *et al.* [40] points out that if the droop effect of the LED is ignored the luminous efficiency of LED is directly proportional to its forward current when the temperature of its junction is constant, as shown in Fig. 7. However, since the nonradiative recombination increases with temperature, the growth rate of luminous efficiency will slow down when forward current comes to a certain extent. So in practical applications, the junction temperature should be considered as well.

III. Related Structure of LED Drivers

A. Power Factor Correction

In order to decrease the impact by harmonic components on input current, a PFC cell is indispensable in the system.

Authorized licensed use limited to: Winston Huff. Downloaded on July 29,2023 at 16:34:46 UTC from IEEE Xplore. Restrictions apply.

TABLE II
ENERGY STAR PROGRAM APPLIED TO LED LAMPS

Performance characteristics	Current criteria
CCT	Nominal CCT:2700 K,3000 K,3500 K, or 4000 K
Color Maintenance	The change of chromaticity over the minimum lumen test period (6000 hours) shall be within 0.007 on the CIE 1975(u', v') diagram
Color Quality (CRI)	CRI ≥ 80, R9 > 0
Dimming	If a product is dimmable, packaging must be state this. Minimum efficacy, light output, CCT, CRI, and power factor or dimmable lamps will be confirmed with the lamp operate at full power.
Warranty	A warranty must be provided for lamps, covering material repair or replacement for a minimum of three (3) years from the date of purchase.
Allowable lamp bases	Must be a lamp base listed by ANSL
Power factor	For lamp power ≤5W and for low voltage lamps, no minimum power factor is required. For lamp power ≥5W, power factor must ≥0.7.
Minimum operating temperature	Integral lamp shall have a minimum operating temperature of −20° or below.
LED operating frequency	≥120 Hz
Electromagnetic and radio frequency interference	Integral LED lamp must meet the appropriate FCC requirements for consumer use (FCC 47CFR Part 15)
Audible noise	Integral lamp shall have a Class A sound rating.
Transient protection	Power supply shall comply with IEEE C.62 41-1991, Class A operation. The line transient shall consist of seven strikes of a 100-kHz ring wave, 2.5-kV level, for both common mode and differential mode.
Operating voltage	Lamp shall operate at rated nominal voltage of 120, 240, or 277 VAC or VDC.

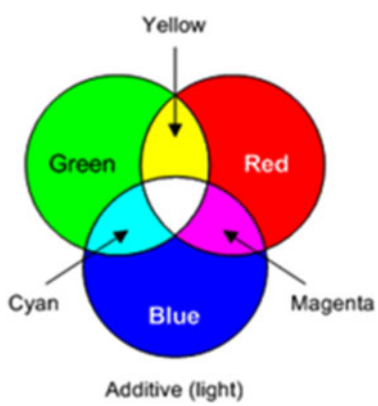

Fig. 4. Principle of white light generation.by RGB LED.

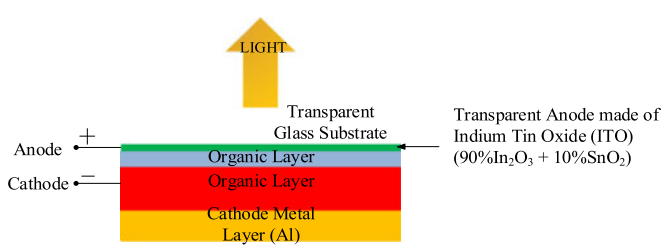

Fig. 5. Structure of OLED.

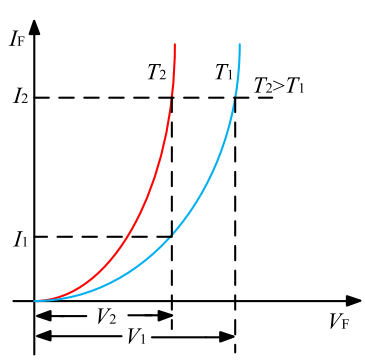

Fig. 6. VI characteristic of LEDs.

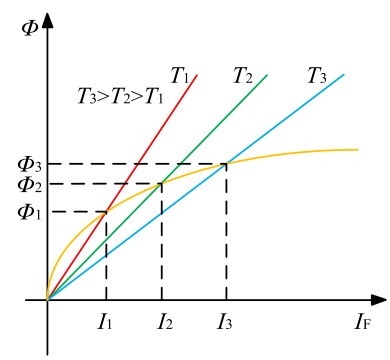

Fig. 7. Relationship of forward current and luminous efficiency of LED.

International Electrotechnical Commission (IEC) and Energy Star release the standard to specify lighting applications for different power levels in THD, Correlated Color Temperature (CCT), Color Rendering Index (CRI), etc.

The PFC cells can be divided into two types according to active or passive mode [41], [42].

1) For the passive mode PFC, adding filter inductors and capacitors connected to the input stage, the passive components perform the PFC. This method do not need extra control circuit that improves the cost and complexity of system and is free from the electromagnetic interferences (EMI) problem. Because of its simplicity, passive mode PFC is still used in many applications.

But passive mode PFC exits some disadvantages. Low-frequency working condition means bulky and heavy size because of adding inductors and capacitors, as shown in Fig. 8. When the circuit works in different conditions, the PFC function is not suitable for most conditions, which results a low PF. Particularly, for LED lighting applications, low PF is not complied with the standard IEC61000-3-2. The passive PFC mode restricts the application area of LED.

2) For the active mode PFC, a better PF can be achieved. Generally, PFC circuit includes buck, boost,

Authorized licensed use limited to: Winston Huff. Downloaded on July 29,2023 at 16:34:46 UTC from IEEE Xplore. Restrictions apply.

Fig. 8. Picture of passive mode PFC module.

buck–boost, Flyback, etc. which can operate in continuous conduction mode (CCM), boundary conduction mode (BCM), and discontinuous conduction mode (DCM). According to the step-up or step-down and isolated or nonisolated characteristic, active PFC circuits can also be divided into four types.

1) Step-Down PFC Cell: buck topology is the most typical step-down circuit [43]–[45]. The output voltage of buck circuit is lower than input voltage peak value. Therefore, for the next stage of dc–dc converter, the bus capacitor of low voltage stress can be selected. Therefore, it suits the situation that high voltage ratio between input voltage and output voltage. buck circuit has few components and simple structure. For the integrated-stage LED driver, when front-stage PFC buck circuit works in DCM, a natural PF function will be achieved.

However, buck PFC circuit still has some drawbacks. When the ac input voltage is lower than the output voltage, the input current will reach zero, which means dead zone. That is to say, during the half period of ac input, input current does not follow the input voltage. The PF is not close to the unity. Besides that, because of the step-down characteristic, the buck converter will only allow the input current to circulate when input voltage is higher than output voltage. When the input voltage is fixed, in order to meet the IEC-61000-3-2 requirements, a minimum conduction angle of 130 is necessary, that is to say, there is a maximum bus voltage that cannot be reached [46].

2) Step-Up PFC Cell: One of the common step-up PFC topologies is boost circuit [47]–[49]. The input inductor of boost can confine the noise from the ac side and slow down the fluctuation of input current and voltage, which can low the THD. Because of step-up characteristic of boost, the backward current stress is relatively low. And CCM or DCM working mode can be adopted according to the power level.

In integrated-stage LED driver, when it works in DCM, in order to obtain satisfying PF, the output voltage has a minimum value [50]. In that method, inner current control loop can be canceled, which will decrease the cost. In addition, for the high power applications, boost can also work in CCM by current control loop to perform the PFC function. But when the input voltage is high, output voltage may be beyond the rated voltage of bus capacitor that improves the difficulty in choosing bus capacitor. However, the most used conduction mode for the boost converter is the critical conduction mode (CRM) [51].

3) Step-Up and Step-Down PFC Cell: buck–boost topology can be used as the PFC cell as well [52], [53]. The main advantage is that it can adjust the output voltage by changing the duty cycle that can be higher or lower than input voltage due to the step-up and step-down character. In order to get over the drawbacks of buck or boost PFC circuit, some research works concentrate on the cascaded buck–boost mode. When the input voltage is higher than the output voltage, the buck mode is working. Otherwise when the input voltage is lower than the output voltage, the boost mode is working. But this method complicates the PFC control method.

In general, boost works in DCM to obtain a nearly unity PF that can easily be controlled. But for buck–boost circuit, there are still some disadvantages like output voltage polarity inversion. In addition, for integrated-stage LED drivers, when buck–boost topology is adopted as the forestage PFC, because of the voltage inversion feature, the integrated design process may be more or less complex depending on the selected topology for the second stage. Therefore, the integrated design process may be more or less complex.

Single-ended primary inductor converter (SEPIC) topology can also be employed as the PFC cell [54], [55]. The input inductor of SEPIC can cancel the filter components and limit the ripple of input current at the design stage. When it works in CCM, by peak current regulated, some bridgeless SEPIC PFC LED drivers are presented to achieve high PF and low THD [56]. And when it works in DCM, the PFC function can be achieved naturally. According to the literature [57], operated in the DCM II, the bus capacitor voltage no longer follows the input rectifier voltage that can cancel the electrolytic capacitor. But compared with other topologies, SEPIC PFC circuit needs more components which means higher cost and lower power density.

4) Flyback PFC Cell: Flyback is also a representative topology as PFC circuit that can operated in CCM, DCM, CRM [58], [59]. Due to its isolated structure, it has high safety and reliability. When works in DCM, a unity PF can be achieved, which features zero-current turning on for the switch and no reverse recovery in the diode of secondary side. But the peak and average current of Flyback is relatively high, the energy loss of switch will be increased. Therefore, in DCM, Flyback is usually applied in low-power applications. When operated in CCM or CRM, the current is low to decrease the loss of switch while the PF is not high enough. And the switching frequency is not constant, resulting the difficulty of designing the EMI circuit.

B. DC–DC Converter

Basically, dc–dc converters are classified according to whether topologies are isolated or nonisolated, i.e., depending on whether the converter is used with or without electrical isolation. For the basic isolated topologies, the main circuits are usually Flyback, forward, push-pull, half-bridge, and full-bridge [60], [61]. The disadvantages of the Flyback and forward topologies are poor transformer utilization due to their unidirectional operation. For the push-pull, half-bridge, full-bridge converters,

Authorized licensed use limited to: Winston Huff. Downloaded on July 29,2023 at 16:34:46 UTC from IEEE Xplore. Restrictions apply.

TABLE III
BASIC DC/DC CONVERTERS

Converter	Output type	Feature
buck	Step-down Non-inverted output	• High efficiency • Discontinuous input current • Continuous output current
boost	Step-up Noninverted output	• High efficiency • Continuous input current • Discontinuous output current • High peak currents in power components
buck–boost	Step-down/step-up Inverted output	• Discontinuous input/output currents • High electrical stresses on the switch and the diode
Cuk	Step-down/step-up Inverted output	• Switch control terminal connected to ground • Continuous input/output currents • High number of passive components • High electrical stresses on the switch and the diode
SEPIC	Step-down/step-up Noninverted output	• Switch control terminal connected to ground • High number of passive components • Continuous input current • Discontinuous output current
Zeta	Step-down/step-up Noninverted output	• Switch control terminal connected to ground • High number of passive components • Continuous output current

the components count in power switches and synchronization is large. In addition, switch control terminal floating problem exists in half-bridge and full-bridge. For the nonisolated converter, there are seven basic converters such as, buck, boost, buck–boost, Cuk, SEPIC, and Zeta [62]–[64].

The dc–dc converter can normally operate in three modes: CCM, DCM, and CRM. CCM means that the current through the inductor is continuous while in DCM, the current is not continuous so that it reaches zero during a given time interval. As for CRM, the peak current is lower than DCM and higher than CCM, the losses are between CCM and DCM. In many research works, according to different input voltage and load, CCM and DCM can transformed each other. Comparison of DCM and CCM reveals the following features [65].

1) In DCM, the working frequency is constant by changing the duty radio to regulate the voltage or current output. Constant frequency operation can decrease the THD influence and a natural PFC function can be obtained by the PFC cell. But its peak current is higher, which results in greater conduction loss and ringing compared with CCM.
2) In CCM, it allows the converter to provide a good load regulation. In addition, the ripple of current is relatively low to decrease the loss of turn-on switch and lighten the burden of designing the EMI [66]. Otherwise it needs larger inductor than the DCM to increase the size of circuit.

For the isolated and nonisolated converter, they have similar situation working in CCM or DCM. Table III summarizes the basic topologies of nonisolated dc–dc converter [65]. Fig. 9 shows the scheme for each configuration.

C. Current Balance

Multichannel LED can ensure the enough output illumination intensity and avoid the high voltage of series-connected structure in real applications. Many techniques have been proposed to achieve the current balance as shown in Fig. 10. Basically, these techniques can be divided into two catalogs, one is active method and the other is passive method.

For the active method, each LED string will have an active control circuit to regulate the current through LEDs load. One method is linear current balance whose switch suffers the input high voltage added the voltage of LEDs. Therefore, this linear current balance method has the disadvantage of high loss of switch. Another method is switch-mode control scheme. By comparing the load current with the reference current, a PWM control signal is generated to decrease the error. Utilizing active devices and relative control circuit can obtain the accuracy required current. While extra control circuit needs more components suffering from high cost, large size, and complex control algorithm. In power stage, both these active methods, including linear-mode and switch-mode, are limiting the efficiency improved.

Passive current balancing method uses passive components such as resistors, capacitors, or inductors. Using the passive components, due to its simple structure, can decrease the cost of system, resulting in passive method current balance is usually adopted to realize the current balance. For example, resistor-based current balance technology is that connecting a resistor to each LEDs string in series, which can simply regulate the changing current of each string LEDs load. But this method will result the extra loss power of system [67]. Another common method is adapting the coupled inductor or transformer [68]. Based on the coupled inductor or transformer, as the principle of magnetic potential balance, the current balance can be obtained. This method can realize the many parallel strings, low cost, and simple structure. However, with the increasing LEDs load strings, the volume of system will be obviously improved. Capacitor-based current balance circuit has larger capacitive reactance than the impedance of LEDs load, which can perform

Authorized licensed use limited to: Winston Huff. Downloaded on July 29,2023 at 16:34:46 UTC from IEEE Xplore. Restrictions apply.

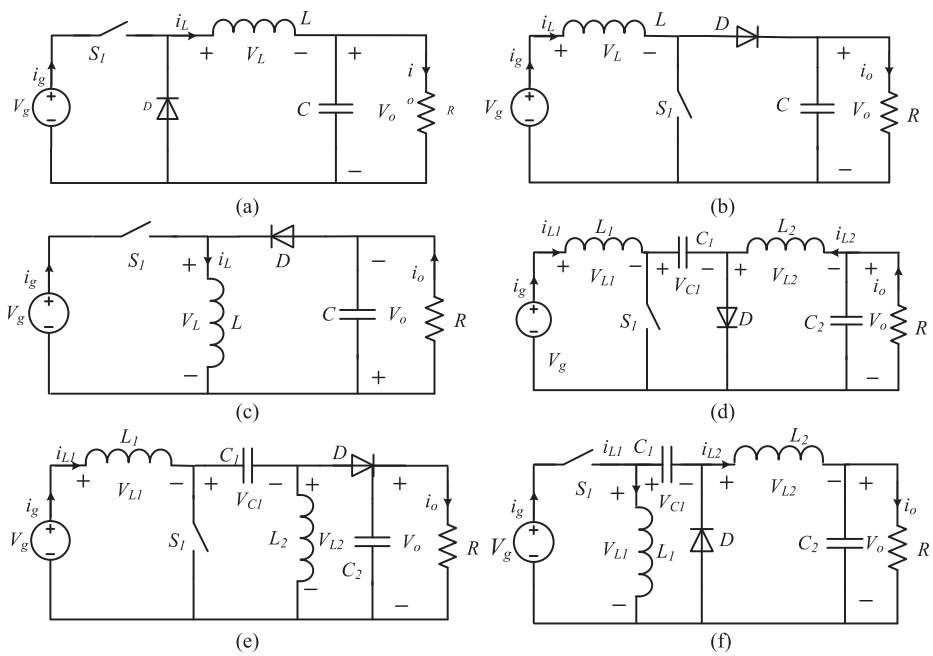

Fig. 9. DC-DC converter topologies. (a) Buck. (b) Boost. (c) buck–boost. (d) Cuk. (e) SEPIC. (f) Zeta.

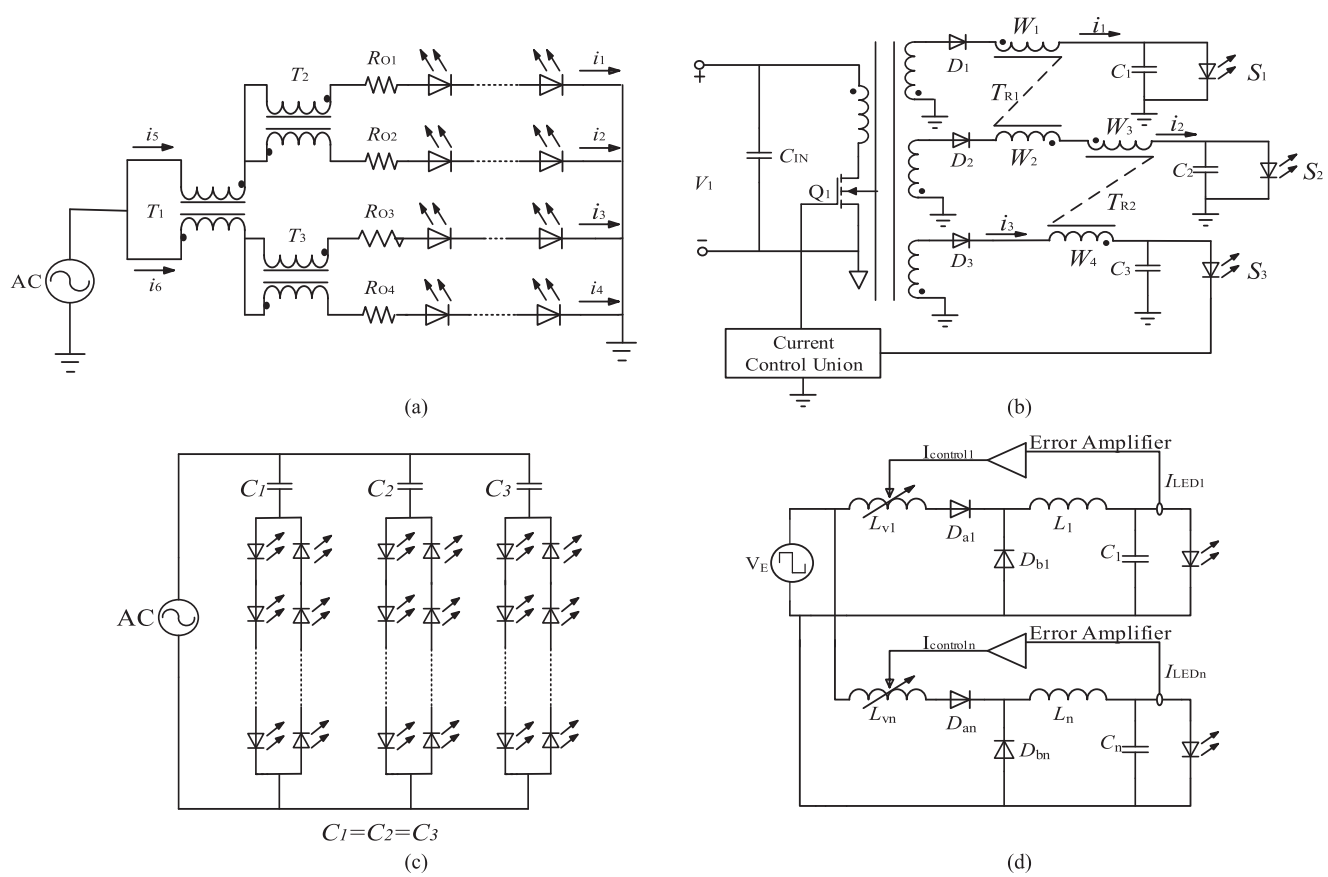

Fig. 10. Several current balance circuits. (a) Resistor-based current balance circuit [67]. (b) Coupled-inductor-based current balance circuit [68]. (c) Coupled-capacitor-based current equalizing circuit [69]. (d) Variable-inductor-based current equalizing circuit [70].

Authorized licensed use limited to: Winston Huff. Downloaded on July 29,2023 at 16:34:46 UTC from IEEE Xplore. Restrictions apply.

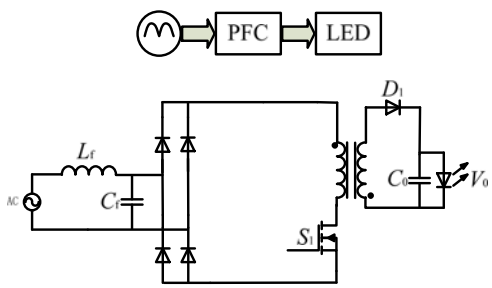

Fig. 11. Single-stage topology LED driver [75].

the current balance. But capacitor-based circuit has the drawback of the resistance error between different attributes, so their current accuracy is limited [69].

And there are many other techniques, e.g., daisy-chain structure with energy-recycling network and current mirror series connected in the LEDs [70], [71]. These techniques can realize excellent current balance and fault tolerance, while external components such as series capacitors, extra control circuitry, increase the cost, and complexity of current balance cell. At present, variable inductor method is presented to realize the current sharing [72]–[74]. This method has more accuracy current balance performance and cost is lower than the active current balance method. But the shortcoming is integrating variable inductors into LED driver topology, which will change the working mode of traditional topology.

IV. Practical Topologies of LED Driver

The LED driver can be divided into three types according to the topology.

A. Single-Stage Converter

Both Flyback and buck are typical single-stage converters that are employed in many low or medium power level applications [75], [76]. In terms of their difference, Flyback converter is preferred when isolation is required, and when isolation is not needed, buck converter can be a good solution. Besides, buck converter can only drive loads with lower voltage than the input voltage peak value, whereas the Flyback converter can adapt voltages through turn ratio design. Take Flyback for example, in DCM, Flyback can also function as PFC, as shown in Fig. 11. But the electrical stress is high, resulting in great switching loss. As a result, the efficiency is low and does not satisfy the demand for high efficiency. While in CCM, the input current is nonsinusoidal, which means a low PF even though the electrical stress is low. The poor performance of single-stage Flyback is limited in the low-power application area.

In addition, for most nonisolated converters, including Flyback converter, switches are operated in hard switch mode, which decreases the efficiency of system. Therefore, innovative soft switch technologies are put forward to solve the problems, such as quasi-resonant switch control method. But in low power applications, the cost is the first place rather than efficiency and performance, so single-stage converters are still adequate schemes.

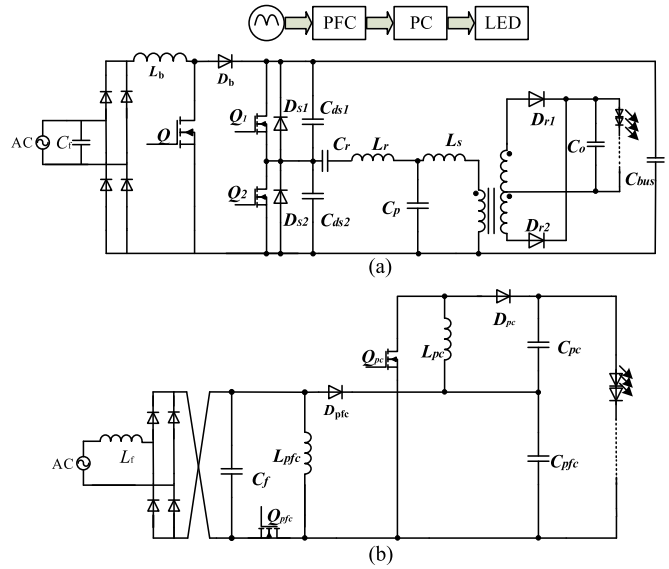

Fig. 12. Two-stage topology LED driver: (a) Boost and CLCL LED driver [77]. (b) Dual buck–boost LED driver [78].

B. Two-Stage Converter

In order to improve the performance of the system, only a single-stage converter is not enough apparently. For example, a two-stage converter can provide better regulation and long lifetime (by avoiding electrolytic capacitors). Besides, the second stage can be designed specifically to regulate the load current. Therefore, traditional LED driver contains PFC cell and Power Converter (PC) cell. PFC cell can improve the PF while permitting high-voltage ripple and then in the PC cell, a ripple cancellation function can be realized. For the two-stage converters [76], PF, THD, and dimming ability can be well regulated by independent cell. But multistage power processing decreases the efficiency of system, besides independent cells have their own control loops that needs more power switches and components increasing cost of the system.

For improving the efficiency, many new techniques are used into LED driver, such as quasi-resonant control method. In that way, the switch operates in soft switching mode. Fig. 12(a) shows a two-stage quasi-resonant LED driver, the first stage of this converter is a boost circuit with PFC function and the second stage is a CLCL circuit that works in zero-voltage switching (ZVS) state and zero-current switching (ZCS) turn-off characteristics of diodes [77]. Because of the soft switching characteristics of the converter, switch losses are reduced and efficiency is improved greatly. In addition, reducing the energy processing is another main method to improve the efficiency as shown in Fig. 12(b). The first converter functions as PFC, the secondary converter processes the ripple of current through the LEDs which can decrease the power processing and reduce the capacitance of capacitor [78], [79].

C. Integrated-Stage-Converter

To overcome the large size and high cost of the two-stage converter, integrating PFC cell and PC cell is a suitable method

Authorized licensed use limited to: Winston Huff. Downloaded on July 29,2023 at 16:34:46 UTC from IEEE Xplore. Restrictions apply.

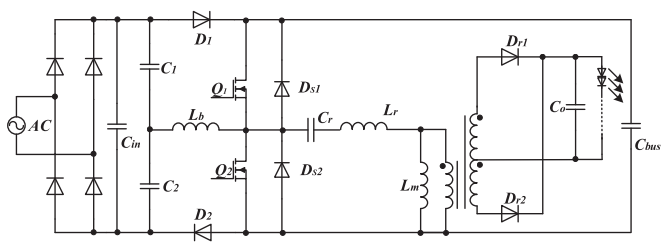

Fig. 13. Integrated-stage LED driver based on boost and *LLC* [81].

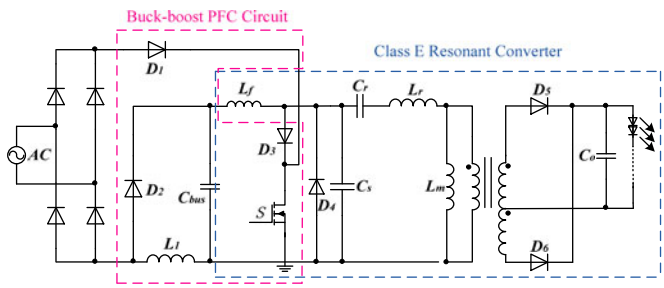

Fig. 14. Integrated-stage LED driver based on buck–boost and Class E [82].

adopted by many topologies [80]. For an integrated type, one switch is used to control the PFC function and PC function at the same time which decreases the number of power switches.

Among these integrated-stage converters, series–parallel resonance circuit (SPRC, also called *LLC*) is a widely used topology for its soft-switching characteristics, as shown in Fig. 13. As the *LLC* resonant converter can achieve ZVS in the primary side and ZCS in the secondary side, as a result, the efficiency is high [81]. However, there are still two switches required in the power circuit, and it needs to design driver circuits for two switching, which would increase the cost and reduce the reliability of the system.

Class E circuit is another widely used topology in soft-switching technology, as shown in Fig. 14. Since there is only one active power switch, Class E converter can achieve a simpler topological structure compared with *LLC* circuit. Besides, soft-switching characteristics are not affected by switch integration [82]. Although Class E shows a great potential in high frequency dc/dc converter, it increases the voltage stress of switch, greatly limiting its application. Therefore, it is usually applied in small power occasions, such as automobile headlights.

Although integrated-stage converters have the advantages of high efficiency, and fast output dynamics, they have their own shortcomings. As for LEDs, the bus voltage is relatively high and integration adds additional current or voltage stress to the switches.

V. Hot Spots of Research on LED Drivers

A. Capacitor-Less Technology

In general, the LED driver always consists of a PFC stage that achieves a high PF to satisfy relevant harmonic standards. However, it increases the instantaneous input power pulsating, while the output power is expect to be constant in order to avoid light flicker [83]. Therefore, electrolytic capacitors are usually adopted to balance the difference between the input and output power. In addition, lifetime of driver is limited by the electrolytic capacitors. Therefore, in the future, canceling electrolytic capacitor will still be a research hotspot. Several methods have been proposed to deal with this problem, one method is using the magnetic energy storage instead of electrolytic-capacitor-based storage, but the size and weight of the system is usually increased [84], [85]. Another method is sacrificing the input PF to alleviate the fluctuation of voltage ripple [86], [87]. In addition, inserting an active filter structure can also eliminate the electrolytic capacitor [88], [89]. But the complexity and cost of system cannot be avoided.

B. Applications of New Power Components

With the development of new power components, SiC and GaN-based power switches have presented many excellent properties: small heat sink volume, low turn-on resistor, etc [90]. The adoption of these new devices promises a further improvement of the attainable power density and system efficiency owing to the above properties. By replacing Si with SiC, researchers have achieved dramatic improvements in the performance of converters. However, as the switching speed increases, the performance of SiC is more sensitive to gate driver and circuit parasitic parameters. Some reported researches have observed overshoot or high frequency oscillation of switching waveform [91], therefore, drive circuits of SiC should be designed carefully. As for GaN devices, with higher switching speed, even working in hard-switching mode, they show their perfect performances in increasing system efficiencies [92], let alone resonant converters. Reusch and Strydom [93] proposes a 1.2-MHz full-bridge resonant circuit based on GaN FETs, which achieves a 25% decrease in device power losses comparing with the one using Si MOSFETs. These above characteristics suggest that SiC and GaN are good replacements of Si MOSFETs.

C. LED or OLED Modeling

With the increasing demand for illumination flux and white color, electrical-thermal-color-lighting properties of LED and OLED are very important for the lifetime of system and color rendering behavior. Differently from traditional electric light sources, the performance of LEDs or OLEDs is influenced by many factors. Therefore, modeling is an important topic for them. Because of the different characteristics and structures of LED and OLED, for example, the increase of temperature is a problem for LED while it is not significant for OLED, their models are quite different. Up to now, there are many models, some are sample and based on only datasheet information while others are more complex and takes experimental characteristics into consideration [94], [95]. These models are useful for LED drivers design especially in white color and color illumination; on the other hand, they also bring some new challenges such as mechanical structure, capacitive behavior, and heat generation [96]. As for practical application, factors such as accuracy, simplicity, and applicability should be carefully considered.

Authorized licensed use limited to: Winston Huff. Downloaded on July 29,2023 at 16:34:46 UTC from IEEE Xplore. Restrictions apply.

D. Power Density Improvement of LED Drivers

High efficiency and high power density LED drivers are the major trend in lighting applications. In order to improve the power density, very high-frequency (MHz) control [97] is adopted in LED lighting applications. Though passive components, e.g., inductors and transformers are becoming smaller than before, their losses increase greatly. Therefore, inductors and transformers should be designed properly. As a result, planar magnetic elements show their superiority in decreasing volume and leakage inductance. But they also have their own shortcomings, for example, it cannot be modified once the PCB is designed, increasing design difficulty. The primary-side integration of the control loop can also help to increase the power density of LED drivers [98].

VI. Conclusion

LEDs and related technologies are developing dramatically. New solid-state lighting components and power components are generated to expand the LED applications areas. Therefore, a higher demanding for the LED drivers are needed. High efficiency, high density, high reliability, long lifetime are the trends in the near future. In order to present the research hotspots of LED drivers, related technologies in LED drivers system were discussed: PFC cell, dc–dc converters, current balance cell, topologies of switched mode LED drivers, capacitor-less, new power components, LED and OLED modeling, high power density, etc.

To understand the LED drivers system and key technologies, PFC cell circuits were discussed in advantages and disadvantages of step-down, step-up, step up and down, isolated Flyback, in order to satisfy the IEC 61000 and Energy Star Standard. DC–DC converters cell and current balance cell were also analyzed. In addition, for topologies of the switched mode LED drivers, single-stage, two-stage, integrated-stage were presented. At last, according to the hot topics in LED drivers in the near decades, some ascendant technologies were stated in general. This paper is expected to be a reference for the researchers and engineers in further improving the performance of LED drivers.

References

[1] Architecture 2013. "Why the building Sector?" 2015. [Online]. Available: http://architecture2030.org/buildings_problem_why

[2] Glass for Europe. "Share of total EU energy consumption," 2015. [Online]. Available: http://www.glassforeuropea.com/en/issues/faq.php

[3] "Energy in China," 2015. [Online]. Available: http://www.snipview.com/q/Energy%20in%20China

[4] H.-Y. Li and H.-C. Chen, "Dynamic modeling and controller design for a single-stage single-switch parallel boost-flyback–flyback converter," *IEEE Trans. Power Electron.*, vol. 27, no. 2, pp. 816–827, Feb. 2012.

[5] T.-J. Liang and C.-M. Huang, "Interleaving controlled three-leg electronic ballast for Dual-HID-Lamps," *IEEE Trans. Power Electron.*, vol. 23, no. 3, pp. 1401–1404, May 2008.

[6] J. M. Alonso, J. Viña, D. G. Vaquero, G. Martínez, and R. Osorio, "Analysis and design of the integrated double buck–boost converter as a high-power-factor driver for power-LED lamps," *IEEE Trans. Ind. Electron.*, vol. 59, no. 4, pp. 1689–1697, Apr. 2012.

[7] R. Jaschke and K. F. Hoffmann, "Higher light efficacy in LED-lamps by lower LED-current," in *Proc. PCIM Eur. 2016, Int. Exhibi. Conf. Power Electron., Intell. Motion, Renewable Energy Energy Manage.*, Nuremberg, Germany, 2016, pp. 1–5.

[8] J. Choi, H.-S. Han, and K. Lee "A current-sourced LED driver compatible with fluorescent lamp ballasts," *IEEE Trans. Power Electron.*, vol. 30, no. 8, pp. 4455–4466, Aug. 2015.

[9] P. S. Almeida, H. A. C. Braga, M. A. Dalla Costa, and J. M. Alonso, "Offline soft-switched LED driver based on an integrated bridgeless boost–asymmetrical half-bridge converter," *IEEE Trans. Ind. Appl.*, vol. 51, no. 1, pp. 761–769, Jan./Feb. 2015.

[10] X. Ruan, B. Wang, K. Yao, and S. Wang, "Optimum injected current harmonics to minimize peak-to-average ratio of LED current for electrolytic capacitor-less AC–DC drivers," *IEEE Trans. Power Electron.*, vol. 26, no. 7, pp. 1820–1825, Jul. 2011.

[11] Q. Luo, S. Zhi, C. Zou, B. Zhao, and L. Zhou, "Analysis and design of a multi-channel constant current light-emitting diode driver based on high-frequency AC bus," *IET Power Electron.*, vol. 6, no. 9, pp. 1803–1811, Nov. 2013.

[12] M. Arias, D. G. Lamar, J. Sebastian, D. Balocco, and A. A. Diallo, "High-efficiency LED driver without electrolytic capacitor for street lighting," *IEEE Trans. Ind. Appl.*, vol. 49, no. 1, pp. 127–137, Jan./Feb. 2013.

[13] H. J. Chiu and S. J. Cheng, "LED backlight driving system for large-scale LCD panels," *IEEE Trans. Ind. Electron.*, vol. 54, no. 5, pp. 2751–2760, Oct. 2007.

[14] H. J. Chiu, T. H. Song, S. J. Cheng, C. H. Li, and Y. K. Lo, "Design and implementation of a single-stage high-frequency HID lamp electronic ballast," *IEEE Trans. Ind. Electron.*, vol. 55, no. 2, pp. 674–683, Feb. 2008.

[15] D. Gacio, J. M. Alonso, A. J. Calleja, J. Garcia, and M. Rico-Secades, "A universal-input single-stage high-power-factor power supply for HB-LEDs based on integrated buck–flyback converter," *IEEE Trans. Ind. Electron.*, vol. 58, no. 2, pp. 589–599, Feb. 2011.

[16] S. Moon, G. B. Koo, and G.W. Moon, "A new control method of interleaved single-stage flyback ac–dc converter for outdoor LED lighting systems," *IEEE Trans. Power Electron.*, vol. 28, no. 8, pp. 4051–4062, Aug. 2013.

[17] H. J. Round, "A note on carborundum," *Elect. World*, vol. 19, pp. 309–3010, 1907.

[18] "The road to the transistor," [Online]. Available: http: //www.jmargolin.com

[19] O. V. Losev, "Luminous carborundum [[silicon carbide]] detector and detection with crystals," *Telegrafiya i Telefoniya bez Provodov*, vol. 19, pp. 485–494, 1927.

[20] M. Pilkuhn, H. Rupprecht, and J. Woodall, "Continuous stimulated emission from GaAs diodes at 77K," *Proc. IEEE*, vol. 51, no. 9, pp. 1243–1243, Sep. 1963.

[21] N. Holonyak and S. F. Bevacqua, "Coherent (visible) light emission from Ga (As1−x Px) junctions," *Appl. Phys. Lett.*, vol. 1, no. 4, pp. 82–83, 1962.

[22] H. Wolinsky "U. of I.'s Holonyak out to take some of Edison's luster." *Chicago Sun-Times*, Feb. 2, 2005.

[23] M. G. Craford *et al.*, "Radiative recombination mechanisms in GaAsP diodes with and without nitrogen doping," *J. Appl. Phys.*, vol. 43, pp. 4075–4083, 1972.

[24] C. B. Duke and J. N. Holonyak, "Advances in light-emitting diodes," *Phys. Today*, vol. 26, pp. 23–31, 1973.

[25] W.O. Groves *et al.*, "GaAsP electroluminescent device doped with iso-electronic impurities," U.S. Patent 29 845, Nov. 11, 1978.

[26] C. Y. Hsieh, C. Y. Yang, and K. H. Chen, "A charge-recycling buck-store and boost-restore (BSBR) technique with dual outputs for RGB LED backlight and flashlight module," *IEEE Trans. Power Electron.*, vol. 24, no. 8, pp. 1914–1925, Aug. 2009.

[27] D. Buso, S. Bhosle, Y. Liu, M. Ternisien, C. Renaud, and Y. Chen, "OLED electrical equivalent device for driver topology design," *IEEE Trans. Ind. Appl.*, vol. 50, no. 2, pp. 1459–1468, Mar./Apr. 2014.

[28] A. E. Moe, N. Banani, L. A. Lee, B. Marquardt, and D. M. Wilson, "Enhanced fluorescence emission using a programmable, reconfigurable LED-array based light source," in *Proc. Int. Conf. Eng. Med. Biol. Soc.*, vol. 3, pp. 2090–2093, Sep. 2004.

[29] K. Saucke, G. Pausch, J. Stein, H.-G. Ortlepp, and P. Schotanus, "Stabilizing scintillation detector systems with pulsed LEDs: a method to derive the LED temperature from pulse height spectra," *IEEE Trans. Nuclear Sci.*, vol. 52, no. 6, pp. 3160–3165, Dec. 2005.

[30] C. C. Chen, C-Y. Wu, and T-F. Wu, "LED back-light driving system for LCD panels," in *Proc. IEEE Appl. Power Electron. Conf: Expo.*, 2006, pp. 381–385.

[31] S. K. Ng, K. H. Loo, Y. M. Lai, and C. K. Tse, "Color control system for RGB LED with application to light sources suffering from prolonged aging," *IEEE Trans. Ind. Electron.*, vol. 61, no. 4, pp. 1788–1798, Apr. 2014.

[32] Y. Zhang, H. Chen, and D. Ma, "A VO-Hopping reconfigurable RGB LED driver with automatic ΔVO detection and predictive peak current control," *IEEE J. Solid-State Circuits*, vol. 50, no. 5, pp. 1287–1298, May 2015.

Authorized licensed use limited to: Winston Huff. Downloaded on July 29,2023 at 16:34:46 UTC from IEEE Xplore. Restrictions apply.

[33] K. Modepalli and L. Parsa, "A scalable N-color LED driver using single inductor multiple current output topology," *IEEE Trans. Power Electron.*, vol. 31, no. 5, pp. 3773–3783, May 2016.

[34] J. H. Chen, S. C. Wang, Y. H. Liu, Y. S. Cheng, and Z. Z. Yang, "RGB LED backlight driving system with dynamic voltage regulation capability," in *Proc. Power Electron. Drive Syst.*, Kitakyushu, Japan, 2013, pp. 349–353.

[35] H. T. Chen, W. C. H. Choy, and S. Y. Hui, "Characterization, modeling, and analysis of organic light-emitting diodes with different structures," *IEEE Trans. Power Electron.*, vol. 31, no. 1, pp. 581–592, Jan. 2016.

[36] M. Dong and L. Zhong, "Chameleon: A color-adaptive web browser for mobile OLED displays," *IEEE Trans. Mobile Comput.*, vol. 11, no. 5, pp. 724–738, May 2012.

[37] C. Wang, C. Leng, L. Wang, W. Lu, and S. Zhang, "An accurate and fast current-biased voltage-programmed AMOLED pixel circuit with OLED biased in AC mode," *J. Display Technol.*, vol. 11, no. 7, pp. 615–619, Jul. 2015.

[38] J. Jacobs, D. Hente, and E. Waffenschmidt, "Drivers for OLEDs," in *Proc. IEEE Ind. Appl. Soc. Annu. Meeting*, New Orleans, LA, USA, 2007, pp. 1147–1152.

[39] Y. C. Li, "A novel control scheme of quasi-resonant valley-switching for high-power-factor AC-to-DC LED drivers," *IEEE Trans. Ind. Electron.*, vol. 62, no. 8, pp. 4787–4794, Aug. 2015.

[40] K. H. Loo, W. K. Lun, S. C. Tan, Y. M. Lai, and C. K. Tse, "On driving techniques for LEDs: Toward a generalized methodology," *IEEE Trans. Power Electron.*, vol. 24, no. 12, pp. 2967–2976, Dec. 2009.

[41] S.-K. Ki, D. K.-W. Cheng, and D. D.-C. Lu, "Analysis and design of a single-phase hybrid mode power factor correction converter," *IET Power Electron*., vol. 1, no. 1, pp. 72–73, Jun. 2008.

[42] C.-A. Cheng, C.-H. Chang, T.-Y. Chung, and F.-L. Yang, "Design and implementation of a single-stage driver for supplying an LED street-lighting module with power factor corrections," *IEEE Trans. Power Electron.*, vol. 30, no. 2, pp. 956–957, Feb. 2015.

[43] X. Wu, J. Yang, J. Zhang, and Z. Qian, "Variable on-time (VOT)-controlled critical conduction mode buck PFC converter for high-input AC-DC HB-LED lighting applications," *IEEE Trans. Power Electron.*, vol. 27, no. 11, pp. 4530–4531, Nov. 2012.

[44] X. Xie, C. Zhao, L. Zheng, and S. Liu, "An improved buck PFC converter with high power factor," *IEEE Trans. Power Electron.*, vol. 28, no. 5, pp. 2277–2279, May 2013.

[45] N. Kondrath and M. K. Kazimierczuk, "Comparison of wide- and high-frequency duty-ratio-to-inductor-current transfer functions of DC-DC PWM buck converter in CCM," *IEEE Trans. Ind. Electron.*, vol. 59, no. 1, pp. 641–642, Jan. 2012.

[46] M. A. Dalla Costa, J. M. Alonso, J. Cardesín, J. García, and D. G. Lamar, "A single-stage high-power-factor electronic ballast based on integrated buck flyback converter to supply metal Halide lamps," *IEEE Trans. Ind. Electron.*, vol. 55, no. 3, pp. 1112–1122, Mar. 2008.

[47] F. Zhang and J. Xu, "A novel PCCM boost PFC converter with fast dynamic response," *IEEE Trans. Ind. Electron.*, vol. 58, no. 9, pp. 4207–4211, Sep. 2011.

[48] Z. Chen, P. Yang, and G. Zhou "Variable duty cycle control for quadratic boost PFC converter," *IEEE Trans. Ind. Electron.*, vol. 63, no. 7, pp. 4222–4225, Jul. 2011.

[49] B. Bryant and M. K. Kazimierczuk, "Voltage-loop power-stage transfer functions with MOSFET delay for boost PWM converter operating in CCM," *IEEE Trans. Ind. Electron.*, vol. 54, no. 1, pp. 347–349, Feb. 2007.

[50] K. H. Liu and Y. L. Lin, "Current waveform distortion in power factor correction circuits employing discontinuous-mode boost converters," in *Proc. 20th Annu. IEEE Power Electron. Spec. Conf.*, Milwaukee, WI, USA, 1989, vol. 2, pp. 825–829.

[51] Y.-L. Chen and Y.-M. Chen, "Line current distortion compensation for DCM/CRM boost PFC converters," *IEEE Trans. Power Electron.*, vol. 31, no. 3, pp. 2026–2038, Mar. 2016.

[52] B. Zhao, A. Abramovitz, and K. Smedley, "Family of bridgeless buck-boost PFC rectifiers," *IEEE Trans. Power Electron.*, vol. 30, no. 12, pp. 6524–6527, Dec. 2015.

[53] M. O. Badawy, Y. Sozer, and J. A. De Abreu-Garcia, "A novel control for a cascaded buck-boost PFC converter operating in discontinuous capacitor voltage mode," *IEEE Trans. Ind. Electron.*, vol. 63, no. 7, pp. 4198–4200, Jul. 2016.

[54] H.-J. Chiu, Y.-K. Lo, J.-T Chen, S.-J. Cheng, C.-Y. Lin, and S.-C. Mou, "A high-efficiency dimmable LED driver for low-power lighting applications," *IEEE Trans. Ind. Electron.*, vol. 57, no. 2, pp. 735–743, Feb. 2010.

[55] G. Tibola and I. Barbi, "Isolated three-phase high power factor rectifier based on the SEPIC converter operating in discontinuous conduction mode," *IEEE Trans. Power Electron.*, vol. 28, no. 11, pp. 4962–4963, Nov. 2013.

[56] B. Poorali and E. Adib, "Analysis of the integrated SEPIC-Flyback converter as a single-stage single-switch power-factor-correction LED driver," *IEEE Trans. Ind. Electron.*, vol. 63, no. 6, pp. 3562–3570, Jun. 2016.

[57] H. Ma, J.-S. Lai, Q. Feng, W. Yu, C. Zheng, and Z. Zhao, "A novel valley-fill SEPIC-derived power supply without electrolytic capacitors for LED lighting," *IEEE Trans. Power Electron.*, vol. 27, no. 6, pp. 3057–3071, Jun. 2012.

[58] C. Zhao, J. Zhang, and X. Wu, "An improved variable on-time (VOT) control strategy for CRM flyback PFC converter," *IEEE Trans. Power Electron.*, vol. 32, no. 2, pp. 915–919, Feb. 2017.

[59] P. S. Saranya and L. R. Chandran, "Analysis of bidirectional fly-back converter," in *Proc. Comput. Power, Energy Inf. Commun.,* 2015, pp. 0425–0429.

[60] H. Wu and Y. Xing, "Families of forward converters suitable for wide input voltage range applications," *IEEE Trans. Power Electron.*, vol. 29, no. 11, pp. 6006–6010, Nov. 2014.

[61] X. Wei, S. Kuroiwa, T. Nagashima, M. K. Kazimierczuk, and H. Sekiya, "Push-pull class-em power amplifier for low harmonic-contents and high output-power applications," *IEEE Trans. Circuits Syst.*, vol. 59, no. 9, pp. 2137–2139, Sep. 2012.

[62] M. Pahlevaninezhad, P. Das, J. Drobnik, P. K. Jain, and A. Bakhshai, "A novel ZVZCS full-bridge DC/DC converter used for electric vehicles," *IEEE Trans. Power Electron.*, vol. 27, no. 6, pp. 2752–2755, Jun. 2012.

[63] K. I. Hwu and T. J. Peng, "A novle buck-boost converter combing KY and buck converters," *IEEE Trans. Power Electron.*, vol. 27, no. 5, pp. 2236–2239, May 2012.

[64] E. Selwan, G. Park, and Z. Gajic, "Optimal control of the Cuk converter used in solar cells via a jump parameter technique," *IET Control Theory Appl.*, vol. 9, no. 6, pp. 893–896, Sep. 2014.

[65] M. B. F. Prieto, S. P. Litran, E. D. Aranda, and J. M. E. Gomez, "New single-input, multiple-output converter topologies: Combing single-switch nonisolated dc-dc converters for single-input, multiple-output applications," *IEEE Trans. Ind. Electron. Mag.*, vol. 10, no. 2, pp. 6–20, Jun. 2016.

[66] Q. Ji, X. Ruan, L. Xie, and Z. Ye, "Conducted EMI spectra of average-current-controlled boost PFC converters operating in both CCM and DCM," *IEEE Trans. Ind. Electron*, vol. 62, no. 4, pp. 2184–2194, Apr. 2015.

[67] K. I. Hwu and S.-C. Chou, "A simple current-balancing converter for LED lighting," in *Proc. 24th Annu. IEEE Appl. Power Electron. Conf. Expo.*, 2009, pp. 587–590.

[68] Y. Hu and M. M. Jovanović, "A new current-balancing method for paralleled LED strings," in *Proc. 26th Annu. IEEE Appl. Power Electron. Conf. Expo.*, Fort Worth TX, USA, 2011, pp. 705–712.

[69] Y. Yu, F. Zhang, and J. Ni, "Capacitor clamped current sharing circuit for multistring LEDs," in *Proc. 4th Annu. IEEE Energy Convers. Congr. Expo.*, Raleigh, NC, USA, 2012, pp. 3568–3574.

[70] R. A. Pinto, J. M. Alonso, M. S. Perdigão, M. F. Da Silva, and R. N. Do Prado, "A new technique to equalize branch currents in multiarray LED lamps based on variable inductors," *IEEE Trans. Ind. Appl.*, vol. 52, no. 1, pp. 521–530, Jan./Feb. 2016.

[71] S. Li and S. Y. R. Hui, "Self-configurable current-mirror circuit with short-circuit and open-circuit fault tolerance for balancing parallel light emitting diode (LED) string currents," *IEEE Trans. Power Electron.*, vol. 29, no. 10, pp. 5498–5507, Oct. 2014.

[72] D. Gacio, J. M. Alonso, J. Garcia, D. García-Llera, and J. Cardesin, "Study on passive self-equalization of parallel-connected LED strings," in *Proc. New Concepts Smart Cities: Fostering Public Private Alliances*, 2013, pp. 1–7.

[73] M. S. Perdigao, M. F. Menke, A. R. Seidel, R. A. Pinto, and J. M. Alonso, "A review on variable inductors and variable transformers: Applications to lighting drivers," in *IEEE Trans. Ind. Electron.*, vol. 52, no. 1, pp. 531–547, Jan./Feb. 2016.

[74] A. Shagerdmootaab and M. Moallem, "Filter capacitor minimization in a flyback LED driver considering input current harmonics and light flicker characteristics," *IEEE Trans. Power Electron.*, vol. 30, no. 8, pp. 4467–4476, Aug. 2015.

[75] J. W. Kim, J. P. Moon, and G. W. Moon, "Analysis and design of a single-switch forward-flyback two-channel LED driver with resonant-blocking capacitor," *IEEE Trans. Power Electron.*, vol. 31, no. 3, pp. 2314–2323, Mar. 2016.

[76] F. Zhang, J. Ni, and Y. Yu, "High power factor AC–DC LED driver with film capacitors," *IEEE Trans. Power Electron.*, vol. 28, no. 10, pp. 4831–4840, Oct. 2013.

[77] Y. Wang, Y. Guan, D. Xu, and W. Wang, "A CLCL resonant DC/DC converter for two-stage LED driver system," *IEEE Trans. Ind. Electron.*, vol. 63, no. 5, pp. 2883–2886, May 2014.

Authorized licensed use limited to: Winston Huff. Downloaded on July 29,2023 at 16:34:46 UTC from IEEE Xplore. Restrictions apply.

[78] D. Camponogara, D. R. Vargas, M. A. D. Costa, J. M. Alonso, J. Garcia, and T. Marchesan, "Capacitance reduction with an optimized converter connection applied to LED drivers," *IEEE Trans. Ind. Electron.*, vol. 62, no. 1, pp. 184–191, Jan. 2015.
[79] G. G. Pereira, M. F. De Melo, M. A. D. Costa, and J. M. Alonso, "High-power-factor LED driver based on input current shaper using a flyback converter," in *Proc. IEEE Ind. Appl. Soc. Annu. Meeting*, Addison, TX, USA, 2015, pp. 1–6.
[80] A. J. Calleja, J. M. Alonso, J. Ribas, E. L. Corominas, M. Rico-Secades, and J. Sebastian, "Design and experimental results of an input-current-shaper based electronic ballast," *IEEE Trans. Power Electron.*, vol. 18, no. 2, pp. 547–557, Mar. 2003.
[81] Y. Wang, Y. Guan, K. Ren, W. Wang, and D. Xu, "A single-stage LED driver based on BCM boost circuit and LLC converter for street lighting system," *IEEE Trans. Ind. Electron.*, vol. 62, no. 9, pp. 5446–5448, Sep. 2015.
[82] Y. Wang, J. Huang, W. Wang, and D. Guo, "A single-stage single-switch LED driver based on Class-E converter," *IEEE Trans. Ind. Appl.*, vol. 52, no. 3, pp. 2618–2620, May/Jun. 2016.
[83] B. Lehman and A. J. Wilkins, "Designing to mitigate effects of flicker in LED lighting: Reducing risks to health and safety," *IEEE Ind. Electron. Mag.*, vol. 1, no. 3, pp. 18–26, Sep. 2014.
[84] P. S. Almeida, D. Camponogara, M. Dalla Costa, H. Braga, and J. M. Alonso, "Matching LED and driver life spans: A review of different techniques," *IEEE Ind. Electron. Mag.*, vol. 9, no. 2, pp. 36–47, Jun. 2015
[85] S. Y. R. Hui, S. N. Li, X. H. Tao, W. Chen, and W. M. Ng, "A novel passive off-line light-emitting diode (LED) driver with long lifetime," in *Proc. IEEE Appl. Power Electron. Conf.*, 2010, pp. 594–600.
[86] J. Shao, "Single stage offline LED driver," in *Proc. IEEE Appl. Power Electron. Conf.*, 2009, pp. 582–586.
[87] L. Gu, X. Ruan, M. Xu, and K. Yao, "Means of eliminating electrolytic capacitor in ac/dc power supplies for LED lighting," *IEEE Trans. Power Electron.*, vol. 24, no. 5, pp. 1399–1408, May 2009.
[88] P. T. Krein and R. S. Balog, "Cost-effective hundred-year life for single phase inverter and rectifiers in solar and LED lighting applications based on minimum capacitance requirements and a ripple power port," in *Proc. IEEE Appl. Power Electron. Conf.*, 2009, pp. 620–625.
[89] R. Wang, F. Wang, D. Boroyevich, and P. Ning, "A high power density single phase PWM rectifier with active ripple energy storage," in *Proc. IEEE Appl. Power Electron. Conf.*, 2010, pp. 1378–1383.
[90] E. Gurpinar and A. Castellazzi, "Single-phase T-type inverter performance benchmark using Si IGBTs, SiC MOSFETs, and GaN HEMTs," *IEEE Trans. Power Electron.*, vol. 31, no. 10, pp. 7148–7152, Oct. 2016.
[91] R. Pittini, Zhe Zhang, and M. A. E. Andersen, "Switching performance evaluation of commercial SiC power devices (SiC JFET and SiC MOSFET) in relation to the gate driver complexity," in *Proc. ECCE Asia Downunder*, 2013, pp. 233–239.
[92] D. Reusch, D. Gilham, Y. Su, and F. C. Lee, "Gallium nitride based 3D integrated non-isolated point of load module," in *Proc. IEEE Appl. Power Electron. Conf. Expo.*, pp. 38–45, 2012.
[93] D. Reusch and J. Strydom, "Evaluation of gallium nitride transistors in high frequency resonant and soft-switching DC–DC converters," *IEEE Trans. Power Electron.*, vol. 30, no. 9, pp. 5151–5158, Sep. 2015
[94] V. Shrotriya and Y. Yang, "Capacitance–voltage characterization of polymer light-emitting diodes," *J. Appl. Phys.*, vol. 97, no. 5, Feb. 2005, Art. no. 054504.
[95] C. Pinot *et al.*, "Electrical modeling and numerical simulation of doped multilayer OLEDs," *SID Symp. Dig. Tech. Papers*, vol. 38, no. 1, pp. 792–795, May 2007.
[96] V. C. Bender, T. B. Marchesan, and J. M. Alonso, "Solid-State Lighting: A concise review of the state of the art on LED and OLED modeling," *IEEE Ind. Electron. Mag.*, vol. 9, no. 2, pp. 6–16, Jun. 2015.
[97] Y. Wu, M. Jacob-Mitos, M. L. Moore, and S. Heikman, "A 97.8% efficient GaN HEMT boost converter with 300-W output power at 1 MHz," *IEEE Electron. Device Lett.*, vol. 29, no. 8, pp. 824–826, Aug. 2008.
[98] S. Xu, S. Cheng, C. Wang, S. Lu, and W. Sun, "Digital regulation scheme for multimode primary-side controlled flyback converter," *IET Power Electron.*, vol. 9, no. 4, pp. 782–785, Sep. 2016.

Yijie Wang (S'09–M'15–SM'15) was born in Heilongjiang Province, China, in 1982. He received the B.S., M.S., and Ph.D. degrees in electrical engineering from Harbin Institute of Technology, Harbin, China, in 2005, 2007, and 2012, respectively.

From 2012 to 2014, he was a Lecturer in the Department of Electrical and Electronics Engineering, Harbin Institute of Technology, where since 2015, he has been an Associate Professor. His research interests include dc–dc converters, soft-switching power converters, power factor correction circuits, digital control electronic ballasts, and LED lighting systems.

J. Marcos Alonso (S'94–M'98–SM'03) received the M.Sc. and Ph.D. degrees in electrical engineering from the University of Oviedo, Spain, in 1990 and 1994, respectively.

Since 2007, he has been a Full Professor in the Electrical Engineering Department, University of Oviedo, Oviedo, Spain. He is a coauthor of more than 370 journal and conference publications, including 90 publications in highly referenced journals. His research interests include electronic lighting, dc–dc converters, power factor correction, resonant inverters, and power electronics in general. He is the holder of seven Spanish patents.

Prof. Alonso has received seven IEEE awards. He serves as an Associate Editor of the IEEE Transactions on Power Electronics and the IEEE Journal on Emerging and Selected Topics In Power Electronics. He is currently the Chair of the IEEE Industry Applications Society (IAS) Industrial Lighting and Displays Committee. He is also serving as Chair of the IAS Awards Department.

Xinbo Ruan (M'97–SM'02–F'16) received the B.S. and Ph.D. degrees in electrical engineering from Nanjing University of Aeronautics and Astronautics (NUAA), Nanjing, China, in 1991 and 1996, respectively.

In 1996, he joined the College of Automation Engineering, NUAA, where he became a Professor in 2002. From 2008 to 2011, he was also with the College of Electrical and Electronic Engineering, Huazhong University of Science and Technology, China. He is the author or coauthor of eight books and more than 200 technical papers published in journals and conference proceedings. His main research interests include soft-switching power electronic converters, power electronic system integration, and renewable energy generation systems.

Prof. Ruan served as Vice President of the China Power Supply Society from 2005 to 2013. He is an Associate Editor for the IEEE Transactions on Industrial Electronics, IEEE Journal of Emerging and Selected Topics In Power Electronics, IEEE Transactions on Power Electronics, and IEEE Transactions on Circuits and Systems–II: Express Briefs.

Authorized licensed use limited to: Winston Huff. Downloaded on July 29,2023 at 16:34:46 UTC from IEEE Xplore. Restrictions apply.