US009313809B2

(12) **United States Patent**
Pelletier et al.

(10) **Patent No.: US 9,313,809 B2**
(45) **Date of Patent: *Apr. 12, 2016**

(54) **METHOD AND APPARATUS FOR TERMINATING TRANSMISSION OF A MESSAGE IN AN ENHANCED RANDOM ACCESS CHANNEL**

(71) Applicant: **Signal Trust for Wireless Innovation**, Wilmington, DE (US)

(72) Inventors: **Benoit Pelletier**, Roxboro (CA); **Diana Pani**, Montreal (CA); **Rocco DiGirolamo**, Laval (CA); **Christopher R. Cave**, Dollard-des-Ormeaux (CA); **Vincent Roy**, Longueuil (CA); **Paul Marinier**, Brossard (CA); **Eldad M. Zeira**, Huntington, NY (US)

(73) Assignee: **Signal Trust for Wireless Innovation**, Wilmington, DE (US)

(*) Notice: Subject to any disclaimer, the term of this patent is extended or adjusted under 35 U.S.C. 154(b) by 0 days.

This patent is subject to a terminal disclaimer.

(21) Appl. No.: **14/319,608**

(22) Filed: **Jun. 30, 2014**

(65) **Prior Publication Data**

US 2014/0307683 A1 Oct. 16, 2014

Related U.S. Application Data

(63) Continuation of application No. 12/238,910, filed on Sep. 26, 2008, now Pat. No. 8,774,104.

(60) Provisional application No. 60/975,985, filed on Sep. 28, 2007, provisional application No. 60/982,528,

(Continued)

(51) **Int. Cl.**
H04W 4/00 (2009.01)
H04W 74/08 (2009.01)

(Continued)

(52) **U.S. Cl.**
CPC ***H04W 74/0833*** (2013.01); ***H04L 5/0053*** (2013.01); ***H04W 28/04*** (2013.01);
(Continued)

(58) **Field of Classification Search**
CPC H04W 76/046; H04W 76/062; H04W 76/068
USPC 370/328, 329, 338, 341, 348; 455/450, 455/464; 709/226, 229
See application file for complete search history.

(56) **References Cited**

U.S. PATENT DOCUMENTS

6,167,248 A 12/2000 Hamalainen et al.
6,246,692 B1 6/2001 Dai et al.

(Continued)

FOREIGN PATENT DOCUMENTS

CA 2 615 915 3/2004
GB 2 371 179 7/2002

(Continued)

OTHER PUBLICATIONS

Ericsson, "Contention resolution for enhanced uplink in CELL_FACH," 3GPP TSG RAN WG2 #60bis, R2-080043, Sevilla, Spain (Jan. 14-18, 2008).

(Continued)

Primary Examiner — Kan Yuen
(74) *Attorney, Agent, or Firm* — Volpe and Koenig, P.C.

(57) **ABSTRACT**

A method and an apparatus is provided for terminating an enhanced random access channel (E-RACH) message in an E-RACH transmission. Triggers for terminating the E-RACH message are provided. The actions upon termination of the E-RACH messages are provided to release enhanced dedicated channel (E-DCH) resources while in cell forward access channel (CELL_FACH) state or transition to cell dedicated channel (CELL_DCH) state.

73 Claims, 9 Drawing Sheets

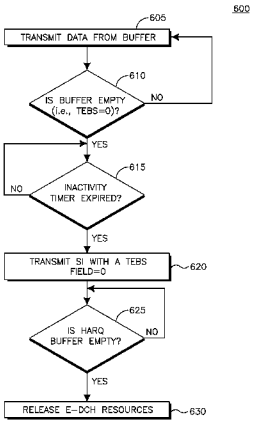

Related U.S. Application Data

filed on Oct. 25, 2007, provisional application No. 61/018,999, filed on Jan. 4, 2008, provisional application No. 61/025,441, filed on Feb. 1, 2008, provisional application No. 61/038,576, filed on Mar. 21, 2008, provisional application No. 61/074,288, filed on Jun. 20, 2008, provisional application No. 61/083,409, filed on Jul. 24, 2008.

(51) **Int. Cl.**

H04W 76/04	(2009.01)
H04W 76/06	(2009.01)
H04W 28/04	(2009.01)
H04L 5/00	(2006.01)
H04W 72/04	(2009.01)
H04W 72/12	(2009.01)

(52) **U.S. Cl.**

CPC ***H04W 72/04*** (2013.01); ***H04W 72/0406*** (2013.01); ***H04W 76/046*** (2013.01); ***H04W 76/068*** (2013.01); *H04W 72/12* (2013.01)

(56) **References Cited**

U.S. PATENT DOCUMENTS

6,721,566	B2	4/2004	Longoni et al.	
6,845,238	B1	1/2005	Muller	
7,079,489	B2	7/2006	Massie et al.	
7,406,314	B2	7/2008	Sharma	
7,477,609	B2	1/2009	Agin	
7,480,269	B2	1/2009	Heo et al.	
7,508,792	B2	3/2009	Petrovic et al.	
7,643,515	B2	1/2010	Willenegger	
7,890,094	B2	2/2011	Iwamura	
7,894,390	B2	2/2011	Nakamata et al.	
2004/0052229	A1	3/2004	Terry et al.	
2004/0068505	A1	4/2004	Lee et al.	
2004/0117860	A1	6/2004	Yi et al.	
2005/0026623	A1	2/2005	Fisher	
2005/0053035	A1	3/2005	Kwak et al.	
2005/0054298	A1	3/2005	Chen	
2005/0101299	A1	5/2005	Farnsworth	
2005/0180371	A1	8/2005	Malkamaki et al.	
2005/0249163	A1*	11/2005	Kim et al.	370/335
2005/0250504	A1	11/2005	Mikola	
2006/0023629	A1	2/2006	Kim et al.	
2006/0039326	A1	2/2006	Jeong et al.	
2006/0140154	A1	6/2006	Kwak et al.	
2006/0251027	A1	11/2006	Chun et al.	
2007/0047445	A1*	3/2007	Usuda et al.	370/236
2007/0115871	A1	5/2007	Zhang et al.	
2007/0135113	A1	6/2007	Moinet et al.	
2007/0213059	A1	9/2007	Shaheen	
2007/0223609	A1	9/2007	Obuchi et al.	
2008/0008152	A1	1/2008	Lohr et al.	
2008/0049669	A1	2/2008	Lundby et al.	
2008/0125043	A1	5/2008	Karmanenko et al.	
2008/0192766	A1	8/2008	Ranta-Aho et al.	
2008/0268852	A1	10/2008	Petrovic et al.	
2009/0061881	A1	3/2009	Gonsa et al.	
2009/0086671	A1	4/2009	Pelletier et al.	
2009/0135769	A1	5/2009	Sambhwani et al.	
2009/0143074	A1	6/2009	Pelletier et al.	
2009/0168704	A1	7/2009	Lee et al.	
2009/0168724	A1	7/2009	Umesh et al.	
2009/0219868	A1	9/2009	Lee et al.	
2009/0225709	A1	9/2009	Wager et al.	
2009/0225739	A1	9/2009	Yeo et al.	
2010/0091652	A1	4/2010	Lin	
2010/0215005	A1	8/2010	Pradas et al.	
2010/0216471	A1	8/2010	Meyer et al.	
2010/0278143	A1	11/2010	Chun et al.	
2011/0164540	A1	7/2011	Lee et al.	
2012/0327833	A1	12/2012	Kim et al.	

FOREIGN PATENT DOCUMENTS

WO	2004/100598	11/2004
WO	2005/006829	1/2005
WO	2005/020474	3/2005
WO	2005/089050	9/2005
WO	2005/101886	10/2005
WO	2006/043782	4/2006
WO	2007/048470	5/2007
WO	2007/077250	7/2007
WO	2007/078155	7/2007
WO	2008/097489	8/2008
WO	2008/137421	11/2008

OTHER PUBLICATIONS

Ericsson, "Enhanced Uplink for CELL_FACH," 3GPP TSG RAN WG1 #50-bis, R1-073954, Shanghai, China (Oct. 8-12, 2007).

Ericsson, "Implicit release for enhanced uplink in CELL_FACH," 3GPP TSG RAN WG2 #61bis, R2-081501 (Mar. 31-Apr. 8, 2008).

Ericsson, "Resource release of common E-DCH in CELL_FACH," 3GPP TSG RAN WG2 #60bis, R2-080044 (Jan. 14-18, 2008).

Huawei, "Release procedure of E-RACH," 3GPP TSG RAN2 #60bis, R2-080262 (Jan. 14-18, 2008).

Infineon Technologies, "Multiplexing option selection in case of E_DCH_TRANSMISSION equal FALSE," 3GPP TSG-RAN WG2 Meeting #58, R2-072054, Kobe, Japan, (May 7-11, 2007).

Infineon, "CELL_FACH E-DCH scheduling simplifications," 3GPP TSG-RAN WG2 Meeting #61, R2-080894, Sorrento, Italy, (Feb. 11-15, 2008).

Infineon, "Resource release mechanisms for CELL_FACH E-DCH," 3GPP TSG-RAN WG2 Meeting #60bis, R2-080148 (Jan. 14-18, 2008).

Nokia Corporation et al., "Introduction of Enhanced Uplink in CELL_FACH in 25.319," 3GPP TSG RAN WG2 meeting #62, R2-082368, Kansas City, USA (May 5-9, 2008). (See pp. 5-7 and 30-35).

Nokia Corporation, et al., "Introduction of Uplink Enhanced CELL_FACH in 25.321 (Draft CR)", Change Request, 25-23, CR CRNum, Current Version: 8.1.0, 3GPP TSG-RAN WG2 Meeting #62, R2-082371, (Kansas City, USA, May 5-9, 2008).

Nokia et al., "CELL_FACH state E-DCH—coverage comparison," 3GPP TSG-RAN WG1 Meeting #50bis, R1-074302 (Oct. 8-12, 2007).

Nokia et al., "Enhanced CELL_FACH State with E-DCH," 3GPP TSG-RAN WG2 Meeting #59bis, R1-074300 (Oct. 8-12, 2007).

Nokia et al., "Resource assignment for E-DCH access in CELL_FACH state," 3GPP TSG-RAN WG1 Meeting #50-BIS, R1-074303 (Oct. 8-12, 2007).

Nokia Siemens Networks, "Draft CR on TS25.435 for Enhanced Uplink in CELL_FACH", Change Request, 25.435, CR, Current Version: 7.8.0, 3GPP TSG-RAN WG3 Meeting #60, R3-081276, (Kansas City, USA, May 5-9, 2008).

Nokia Siemens Networks, "Introduction of Enhanced CELL_FACH state," 3GPP TSG-2 Meeting #57, R2-071556, St. Julian's, Malta (Mar. 26-30, 2007).

NSN et al, "Further Discussion on Enhanced CELL_FACH in REL8", 3GPP TSG-RAN WG-2 Meeting #59, R2-073254, (Athens, Greece, Aug. 20-24, 2007).

NTT Docomo, Inc., "Issues regarding persistent scheduling," 3GPP TSG RAN WG2 #59, R2-073567, Athens, Greece (Aug. 20-24, 2007).

Qualcomm Europe, "L1/2 aspects for enhanced UL for CELL_FACH," 3GPP TSG-RAN WG1 #50-bis, R1-074126 (Oct. 8-12, 2007).

Qualcomm Europe, "E-DCH Resource Release in CELL_FACH," 3GPP TSG-RAN WG3 #60, R3-081091, Kansas City, Missouri, US (May 5-9, 2008).

Qualcomm Europe, "Empty Buffer Status reporting and Implicit release for CCCH messages using enhanced uplink in CELL_FACH," 3GPP TSG-RAN WG2 #61-bis, R2-081581, Shenzhen, China (Mar. 31-Apr. 4, 2008).

(56) **References Cited**

OTHER PUBLICATIONS

Qualcomm Europe, "E-RNTI handling in Active Set Update procedure," 3GPP TSG-RAN WG 2 Meeting #51, R2-060682 (Feb. 13-17, 2006).
Qualcomm Europe, "Layer 1/2 aspects for enhanced UL for CELL_FACH," 3GPP TSG-RAN WG2 #59bis, R2-074390 (Oct. 8-12, 2007).
Third Generation Partnership Project Support Team, "Minutes of the 59bis TSG-WG2 Meeting (Shanghai, China, Oct. 8-12, 2007)", TSG-RAN WG2 meeting #60, R2-075189, (Korea Nov. 5-9, 2007).
Third Generation Partnership Project Work Area, "Enhanced Uplink for CELL_FACH State in FDD", TSG-RAN #37 Meeting, RP-070677, (Riga, Latvia, Sep. 11-14, 2007).
Third Generation Partnership Project, "Technical Specification Group Radio Access Network; Enhanced Uplink; Overall Description; Stage 2 (Release 7)", 3GPP TS 25.319, V7.2.0, (Mar. 2007).
Third Generation Partnership Project, "Technical Specification Group Radio Access Network; Enhanced Uplink; Overall Description; Stage 2 (Release 7)", 3GPP TS 25.319, V7.6.0, (May 2007).
Third Generation Partnership Project, "Technical Specification Group Radio Access Network; Enhanced Uplink; Overall Description; Stage 2 (Release 7)", 3GPP TS 25.319, V8.3.0, (Sep. 2008).
Third Generation Partnership Project, "Technical Specification Group Radio Access Network; Physical Channels and Mapping of Transport Channels Onto Physical Channels (FDD) (Release 7)", TS 25.211, V7.3.0, (Sep. 2007).
Third Generation Partnership Project, "Technical Specification Group Radio Access Network; Physical Channels and Mapping of Transport Channels Onto Physical Channels (FDD) (Release 8)", TS 25.211, V8.2.0, (Sep. 2008).
Third Generation Partnership Project, Technical Specification Group Radio Access Network; Medium Access Control (MAC) Protocol Specification (Release 7), 3GPP TS 25.321, V7.5.0, (Jun. 2007).
Third Generation Partnership Project, Technical Specification Group Radio Access Network; Medium Access Control (MAC) Protocol Specification (Release 7), 3GPP TS 25.321, V7.10.0, (Jun. 2008).
Third Generation Partnership Project, Technical Specification Group Radio Access Network; Medium Access Control (MAC) Protocol Specification (Release 7), 3GPP TS 25.321, V8.3.0, (Sep. 2008).
Third Generation Partnership Project, "Technical Specification Group Radio Access Network; UTRAN lur Interface User Plane Protocols for Common Transport Channel Data Streams (Release 6)," 3GPP TS 25.425 V6.4.0 (Dec. 2006).
Third Generation Partnership Project, "Technical Specification Group Radio Access Network; UTRAN lur Interface User Plane Protocols for Common Transport Channel Data Streams (Release 6)," 3GPP TS 25.425 V6.5.0 (Sep. 2008).
Third Generation Partnership Project, "Technical Specification Group Radio Access Network; UTRAN lur Interface User Plane Protocols for Common Transport Channel Data Streams (Release 7)," 3GPP TS 25.425 V7.8.0 (Sep. 2008).
Third Generation Partnership Project, "Technical Specification Group Radio Access Network; UTRAN lur Interface User Plane Protocols for Common Transport Channel Data Streams (Release 8)," 3GPP TS 25.425 V8.0.0 (Sep. 2008).
Third Generation Partnership Project, "Technical Specification Group Radio Access Network; Medium Access Control (MAC) protocol specification (Release 1999)," 3GPP TS 25.321 V3.17.0 (Jun. 2004).
Third Generation Partnership Project, "Technical Specification Group Radio Access Network; Medium Access Control (MAC) protocol specification (Release 4)," 3GPP TS 25.321 V4.10.0 (Jun. 2004).
Third Generation Partnership Project, "Technical Specification Group Radio Access Network; Medium Access Control (MAC) protocol specification (Release 5)," 3GPP TS 25.321 V5.13.0 (Mar. 2007).
Third Generation Partnership Project, "Technical Specification Group Radio Access Network; Medium Access Control (MAC) protocol specification (Release 5)," 3GPP TS 25.321 V5.14.0 (Sep. 2008).
Third Generation Partnership Project, "Technical Specification Group Radio Access Network; Medium Access Control (MAC) protocol specification (Release 6)," 3GPP TS 25.321 V6.13.0 (Jun. 2007).
Third Generation Partnership Project, "Technical Specification Group Radio Access Network; Medium Access Control (MAC) protocol specification (Release 6)," 3GPP TS 25.321 V6.16.0 (Sep. 2008).
Third Generation Partnership Project, "Technical Specification Group Radio Access Network; Physical channels and mapping of transport channels onto physical channels (FDD) (Release 1999)", 3GPP TS 25.211 V3.12.0 (Sep. 2002).
Third Generation Partnership Project, "Technical Specification Group Radio Access Network; Physical channels and mapping of transport channels onto physical channels (FDD) (Release 4)", 3GPP TS 25.211 V4.6.0 (Sep. 2002).
Third Generation Partnership Project, "Technical Specification Group Radio Access Network; Physical channels and mapping of transport channels onto physical channels (FDD) (Release 5)", 3GPP TS 25.211 V5.8.0 (Dec. 2005).
Third Generation Partnership Project, "Technical Specification Group Radio Access Network; Physical channels and mapping of transport channels onto physical channels (FDD) (Release 6)", 3GPP TS 25.211 V6.8.0 (Sep. 2007).
Third Generation Partnership Project, "Technical Specification Group Radio Access Network; Physical channels and mapping of transport channels onto physical channels (FDD) (Release 6)", 3GPP TS 25.211 V6.9.0 (Nov. 2007).
Third Generation Partnership Project, "Technical Specification Group Radio Access Network; Physical channels and mapping of transport channels onto physical channels (FDD) (Release 7)", 3GPP TS 25.211 V7.6.0 (May 2008).
Third Generation Partnership Project, "Technical Specification Group Radio Access Network; UTRAN lur Interface User Plane Protocols for Common Transport Channel Data Streams (Release 7)," 3GPP TS 25.425 V7.4.0 (Jun. 2007).
Third Generation Partnership Project; "Technical Specification Group Radio Access Network; UTRAN lub/lur interface user plane protocol for DCH data streams (Release 7)," 3GPP TS 25.427 V7.4.0 (Mar. 2007).
Third Generation Partnership Project; "Technical Specification Group Radio Access Network; UTRAN lub/lur interface user plane protocol for DCH data streams (Release 8)," 3GPP TS 25.427 V8.0.0 (Mar. 2008).
Third Generation Partnership Project; "Technical Specification Group Radio Access Network; UTRAN lub/lur interface user plane protocol for DCH data streams (Release 7)," 3GPP TS 25.427 V7.5.0 (Sep. 2007).
Third Generation Partnership Project; "Technical Specification Group Radio Access Network; UTRAN lub/lur interface user plane protocol for DCH data streams (Release 5)," 3GPP TS 25.427 V5.5.0 (Jun. 2005).
Third Generation Partnership Project; "Technical Specification Group Radio Access Network; UTRAN lub/lur interface user plane protocol for DCH data streams (Release 6)," 3GPP TS 25.427 V6.8.0 (Dec. 2006).
Third Generation Partnership Project; "Technical Specification Group Radio Access Network; UTRAN lub/lur interface user plane protocol for DCH data streams (Release 4)," 3GPP TS 25.427 V4.5.0 (Dec. 2003).
Third Generation Partnership Project; "Technical Specification Group Radio Access Network; UTRAN lub/lur interface user plane protocol for DCH data streams (Release 1999)," 3GPP TS 25.427 V3.11.0 (Dec. 2003).
Third Generation Partnership Project; "Technical Specification Group Radio Access Network; UTRAN lur interface user plane protocols for Common Transport Channel data streams (Release 1999)," 3GPP TS 25.425 V3.8.0 (Dec. 2003).

(56) **References Cited**

OTHER PUBLICATIONS

Third Generation Partnership Project; "Technical Specification Group Radio Access Network; UTRAN lur interface user plane protocol for Common Transport Channel data streams (Release 4)," 3GPP TS 25.425 V4.4.0 (Dec. 2003).

Third Generation Partnership Project; "Technical Specification Group Radio Access Network; UTRAN lur interface user plane protocol for Common Transport Channel data streams (Release 5)," 3GPP TS 25.425 V5.8.0 (Jun. 2005).

Third Generation Partnership Prorgam Support Team, "Current Minutes of the 59bis TSG-RAN WG2 Meeting (Shanghai, China, Oct. 8-12, 2007)", TSG-RAN WG2 Meeting #60, R2-7xxxx, (Korea, Nov. 5-9, 2007).

TSG-RAN-WG2, "Reply LS on Enhanced Uplink for CELL_FACH state in FDD," 3GPP TSG-RAN-WG2 Meeting #60, R2-075472 (Nov. 5-9, 2007).

* cited by examiner

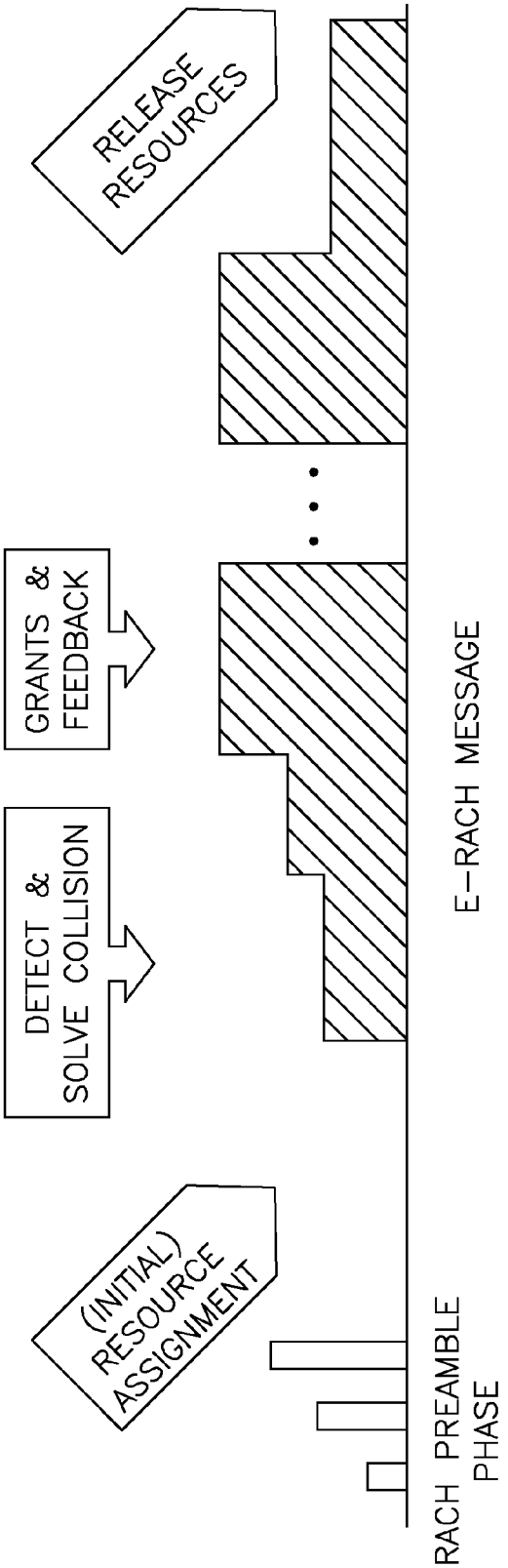

FIG. 1 (PRIOR ART)

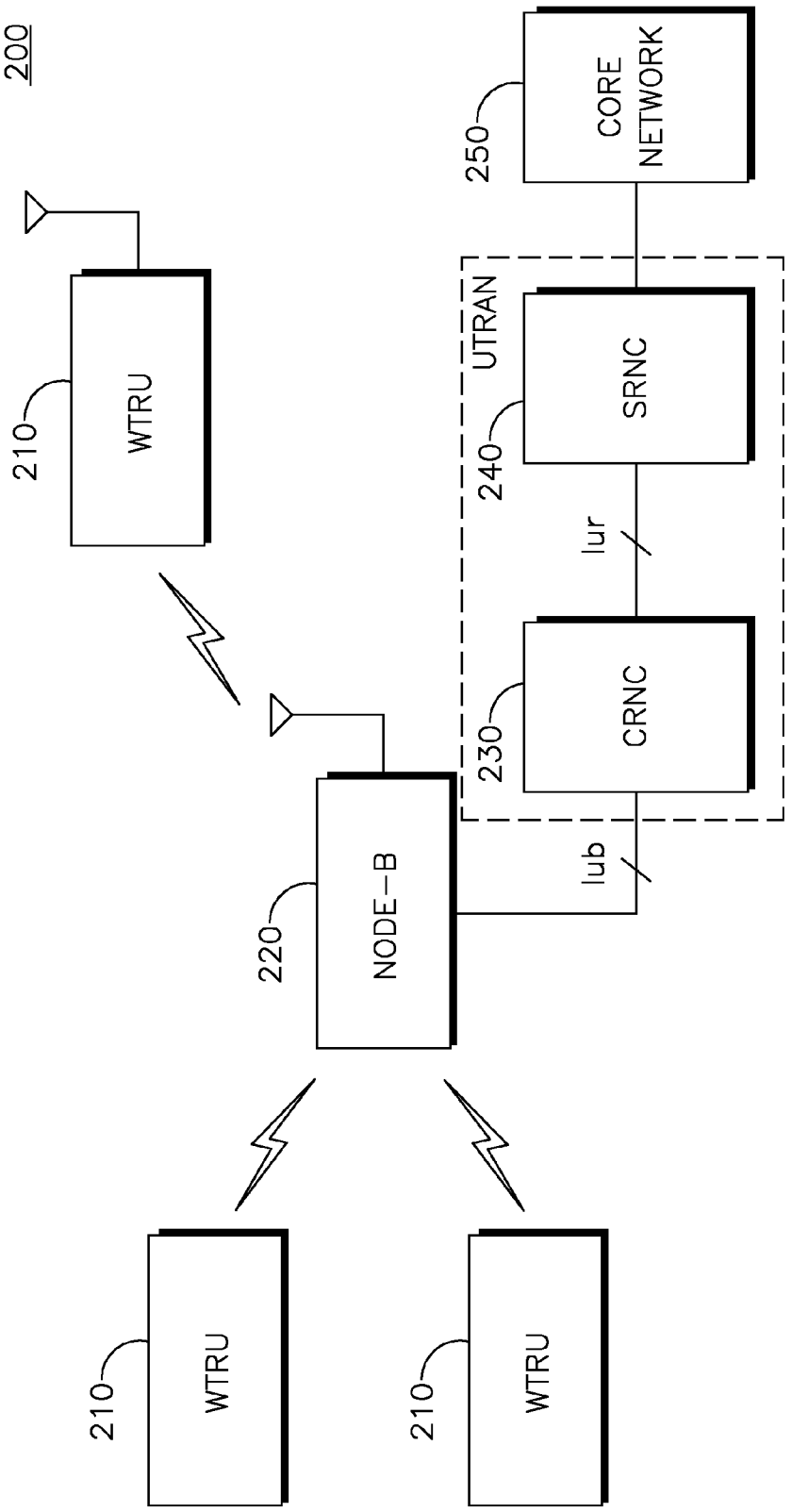
200
210
WTRU
250
CORE NETWORK
UTRAN
240
SRNC
Iur
230
CRNC
Iub
220
NODE-B
210
WTRU
210
WTRU

FIG. 2

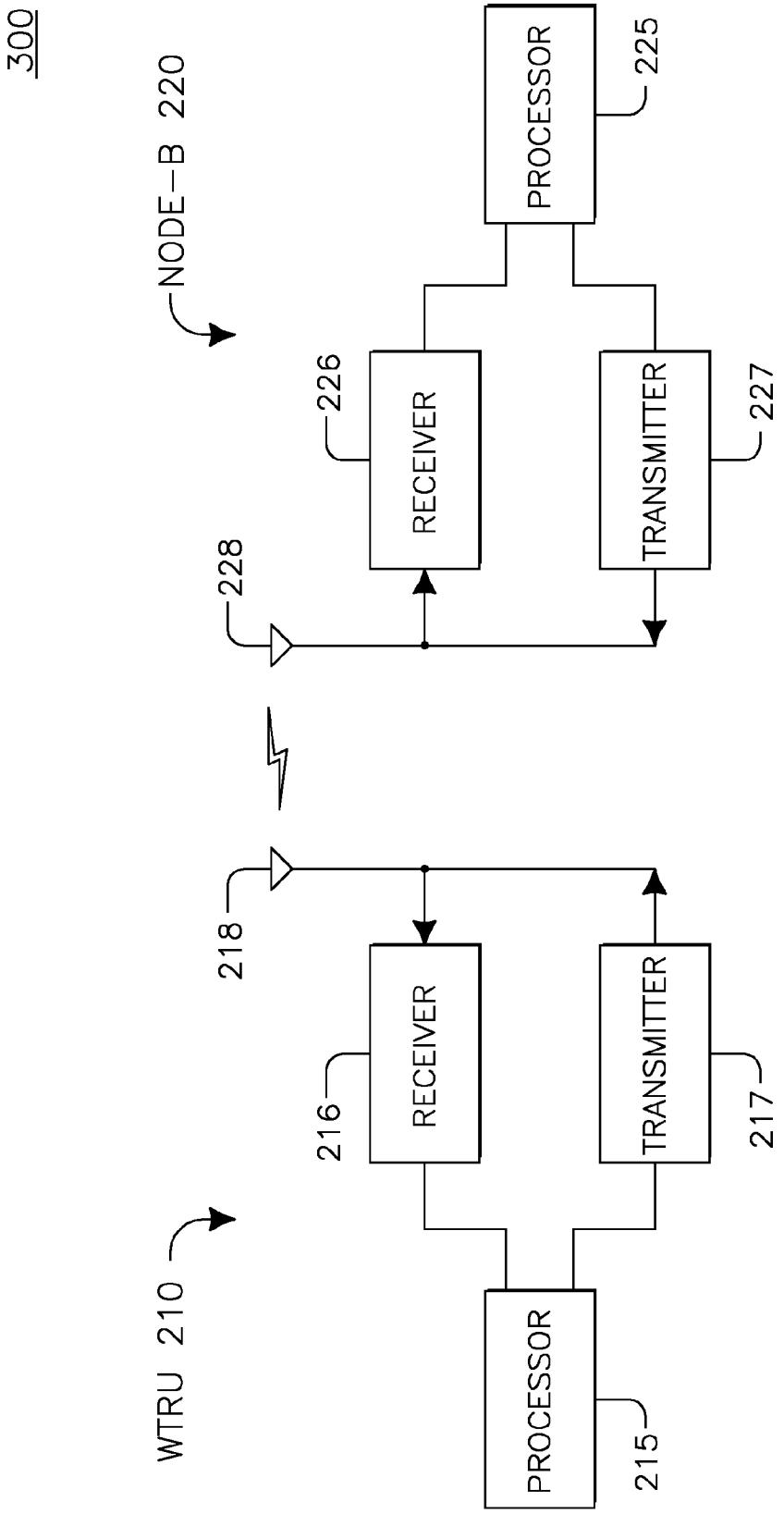
300
NODE-B 220
PROCESSOR
225
226
RECEIVER
TRANSMITTER
227
228
218
RECEIVER
216
TRANSMITTER
217
WTRU 210
PROCESSOR
215

FIG. 3

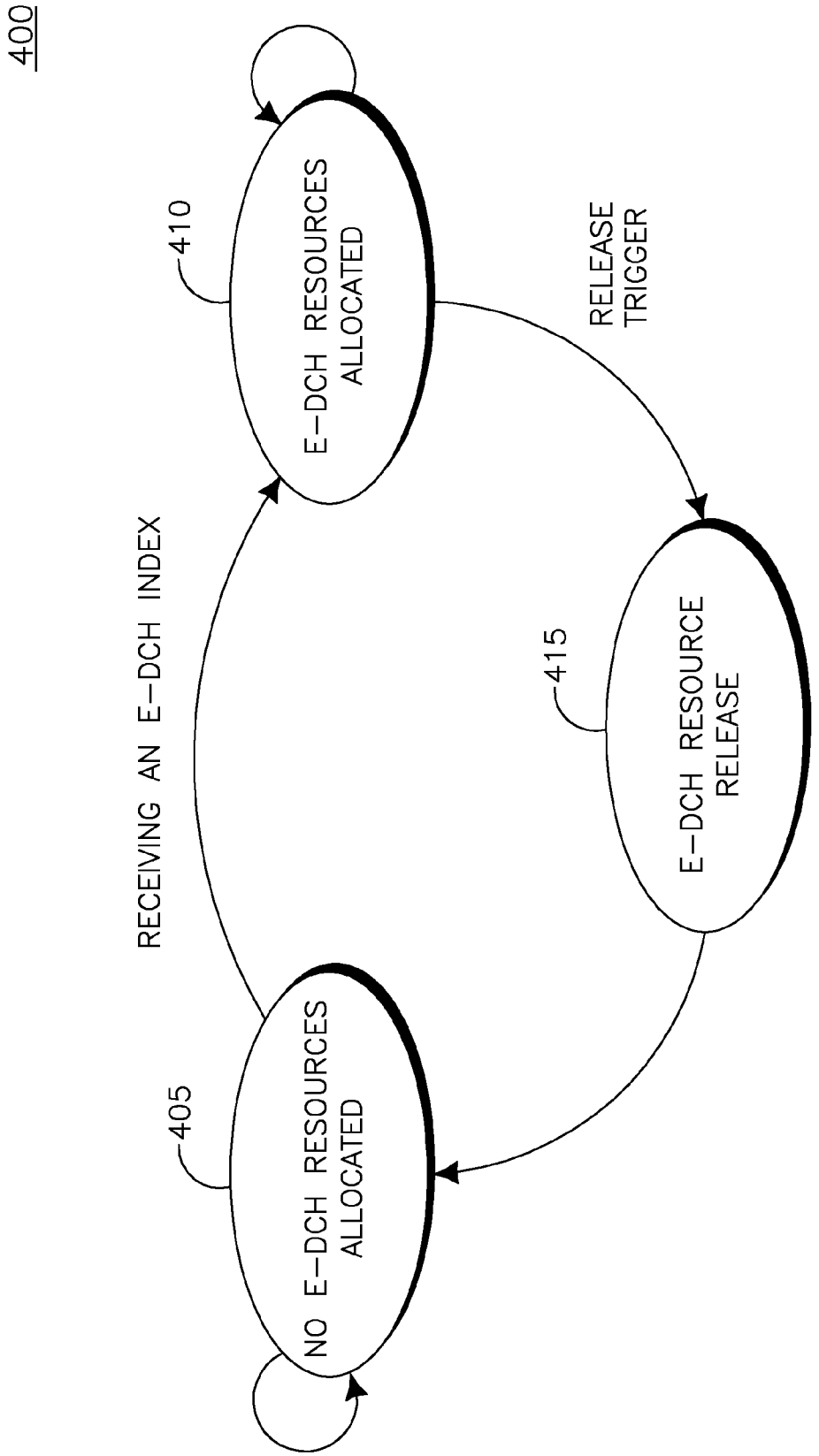
400
410
E-DCH RESOURCES ALLOCATED
RELEASE TRIGGER
415
E-DCH RESOURCE RELEASE
RECEIVING AN E-DCH INDEX
405
NO E-DCH RESOURCES ALLOCATED

FIG. 4

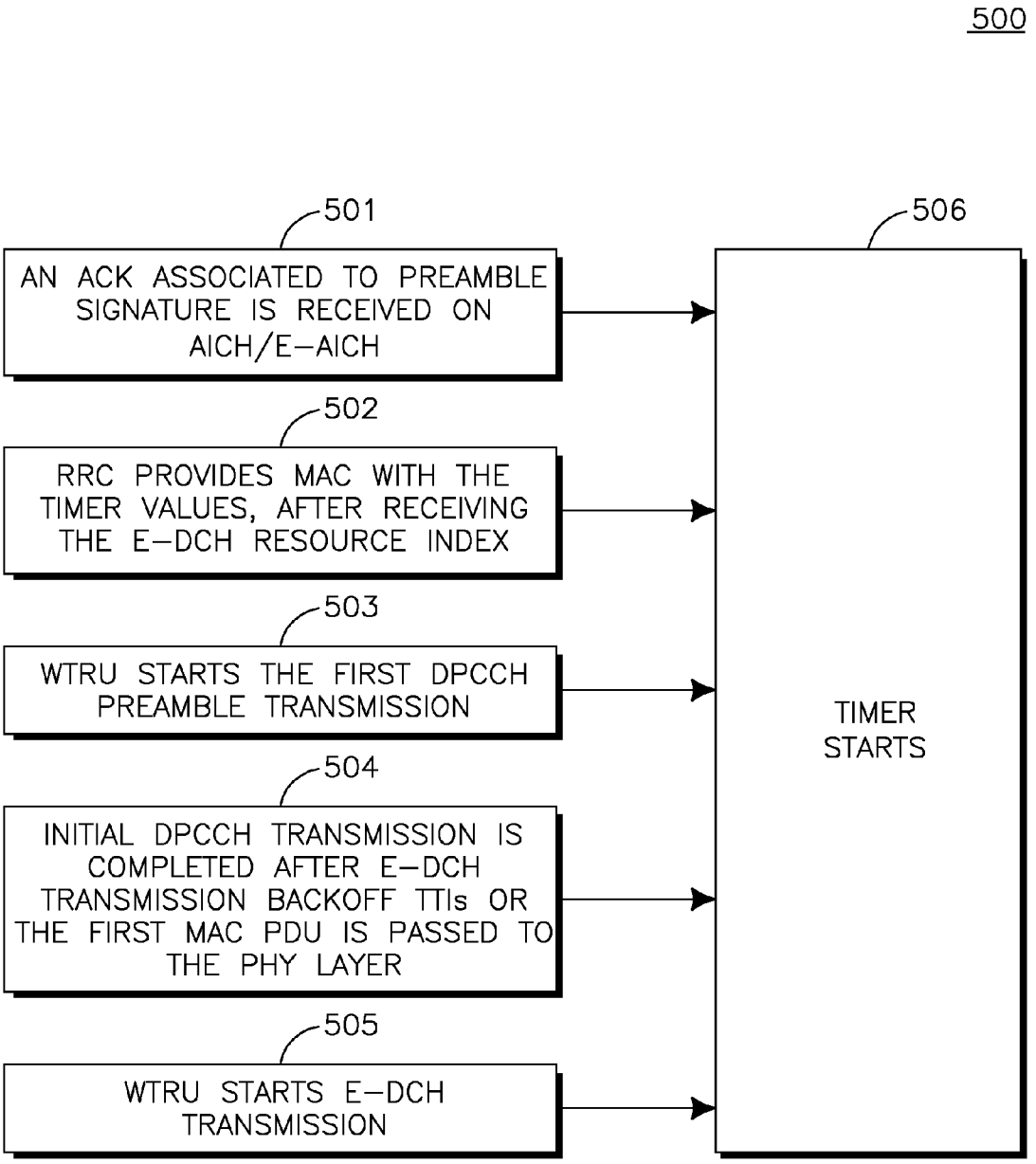
500
501
AN ACK ASSOCIATED TO PREAMBLE SIGNATURE IS RECEIVED ON AICH/E-AICH
502
RRC PROVIDES MAC WITH THE TIMER VALUES, AFTER RECEIVING THE E-DCH RESOURCE INDEX
503
WTRU STARTS THE FIRST DPCCH PREAMBLE TRANSMISSION
504
INITIAL DPCCH TRANSMISSION IS COMPLETED AFTER E-DCH TRANSMISSION BACKOFF TTIs OR THE FIRST MAC PDU IS PASSED TO THE PHY LAYER
505
WTRU STARTS E-DCH TRANSMISSION
506
TIMER STARTS

FIG. 5

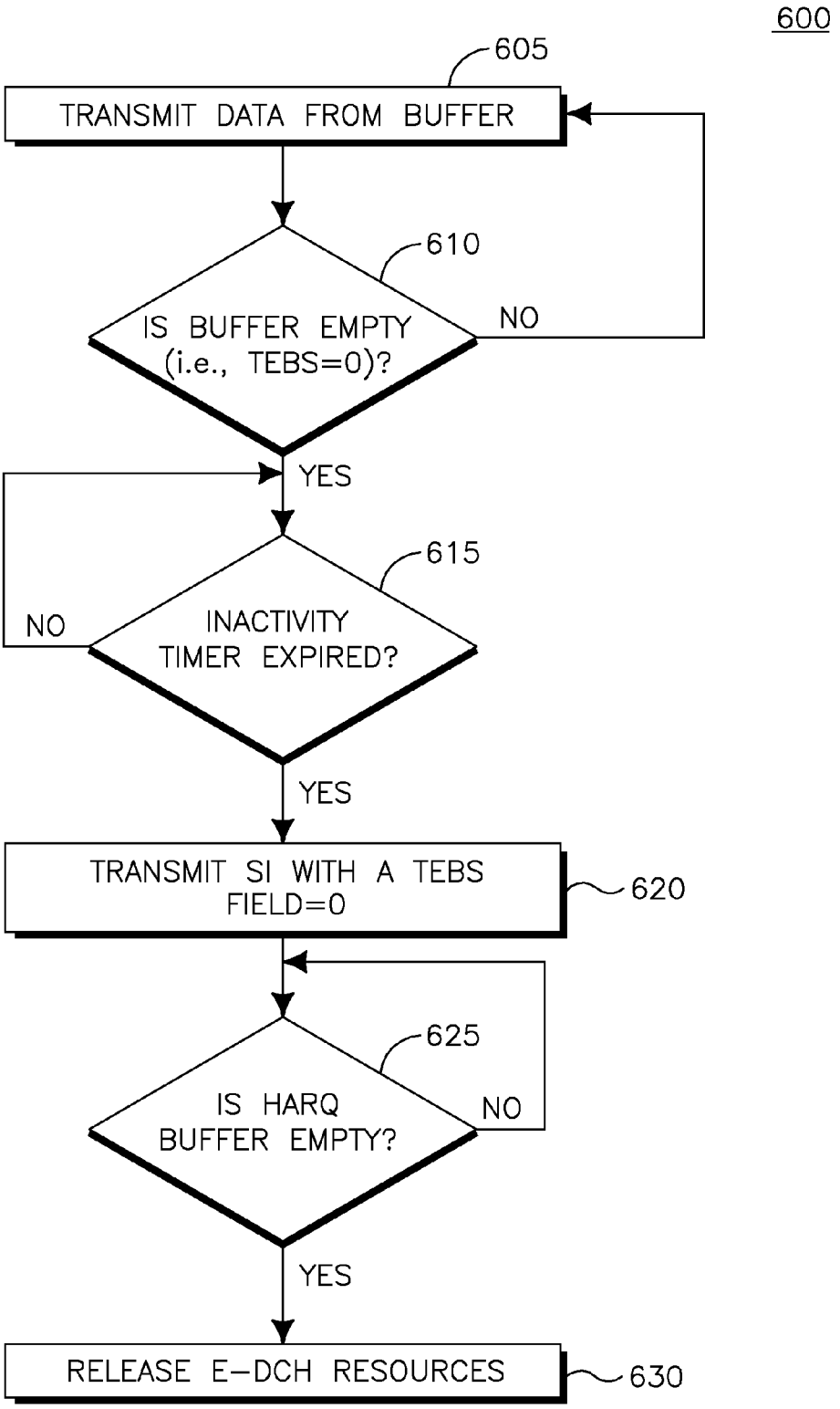
600
605
TRANSMIT DATA FROM BUFFER
610
IS BUFFER EMPTY (i.e., TEBS=0)?
NO
YES
615
INACTIVITY TIMER EXPIRED?
NO
YES
TRANSMIT SI WITH A TEBS FIELD=0
620
625
IS HARQ BUFFER EMPTY?
NO
YES
RELEASE E-DCH RESOURCES
630

FIG. 6

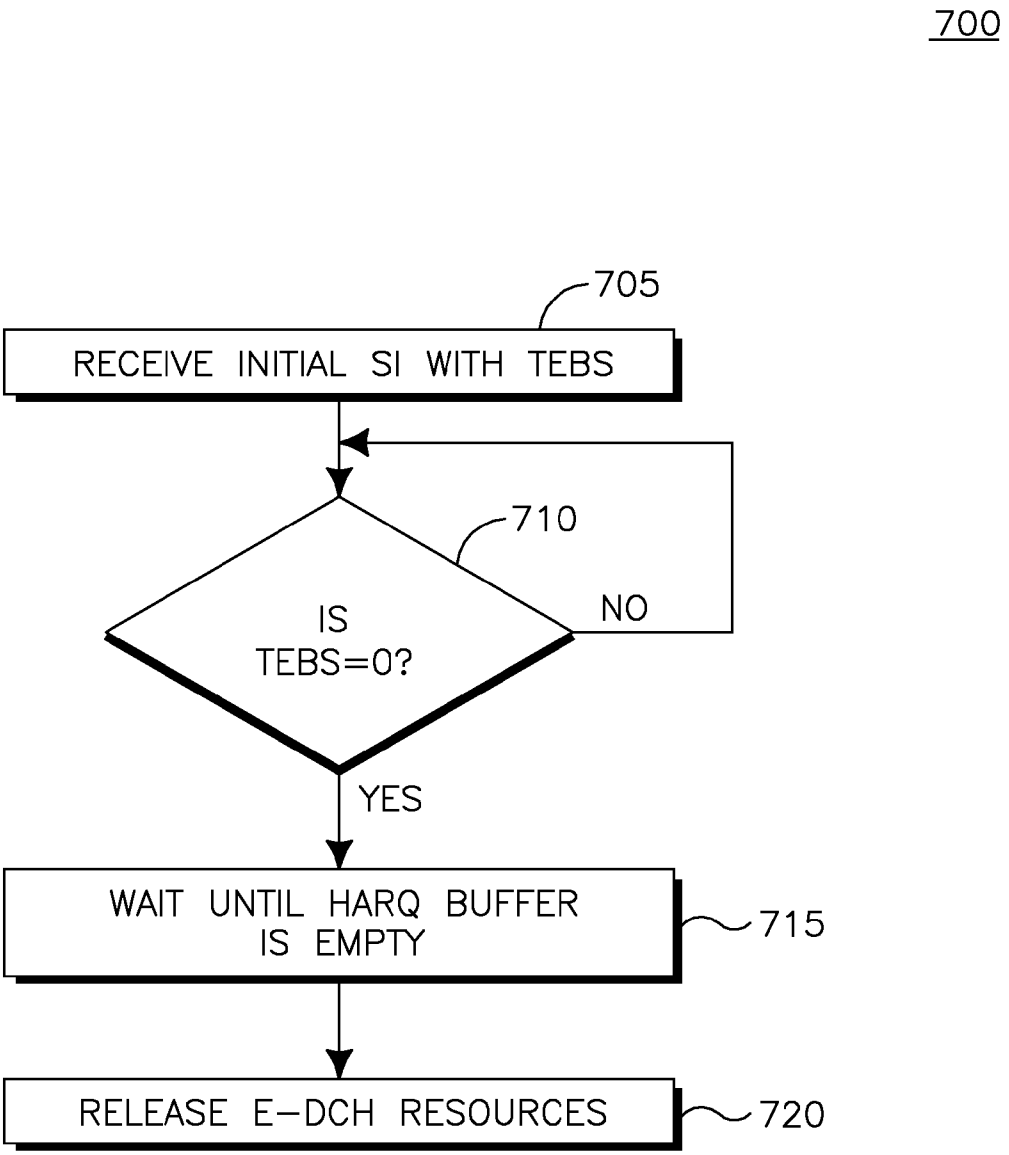
700
705
RECEIVE INITIAL SI WITH TEBS
710
IS
TEBS=0?
NO
YES
WAIT UNTIL HARQ BUFFER
IS EMPTY
715
RELEASE E-DCH RESOURCES
720

FIG. 7

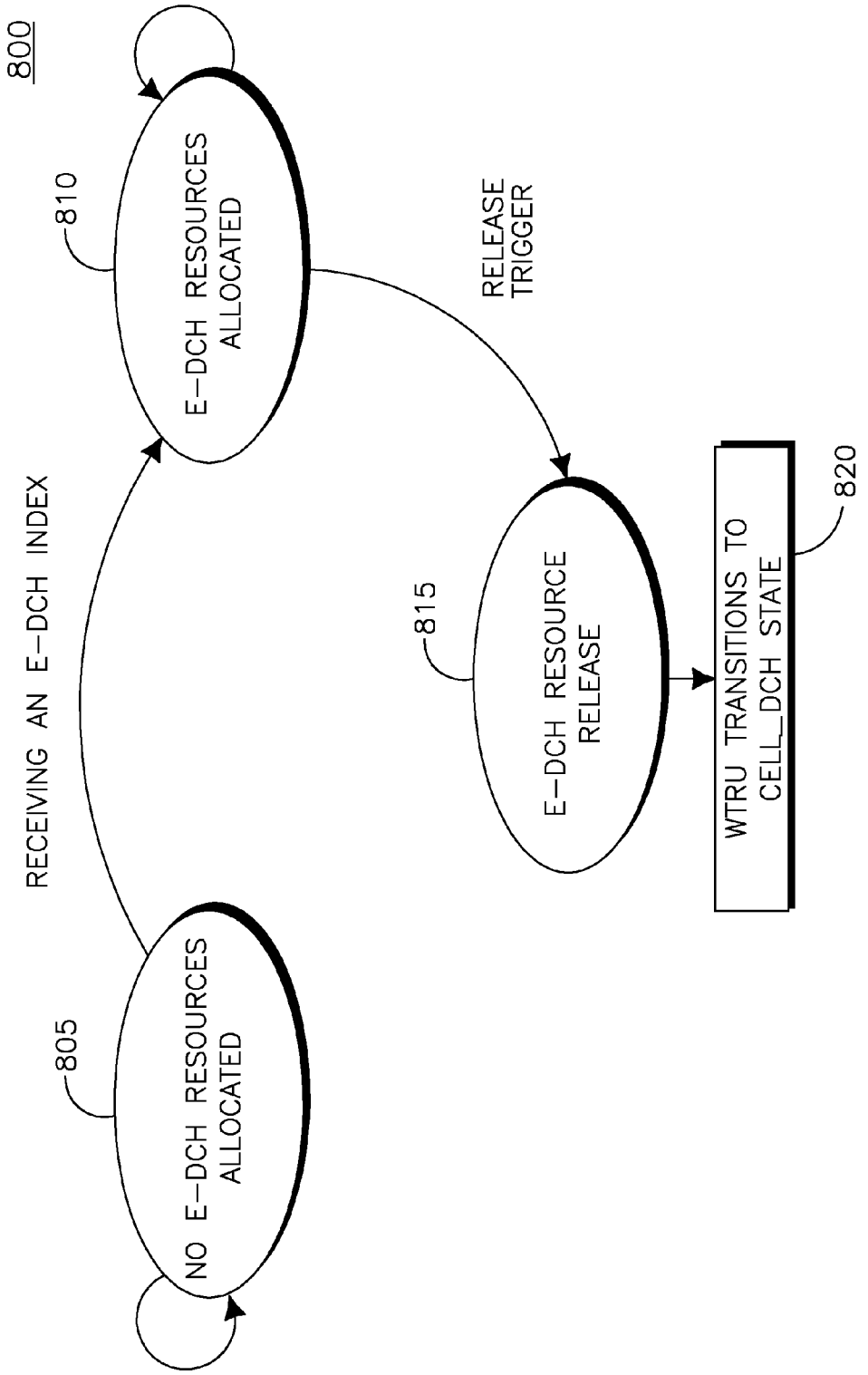
800
810
E-DCH RESOURCES ALLOCATED
RECEIVING AN E-DCH INDEX
805
NO E-DCH RESOURCES ALLOCATED
RELEASE TRIGGER
815
E-DCH RESOURCE RELEASE
820
WTRU TRANSITIONS TO CELL_DCH STATE

FIG. 8

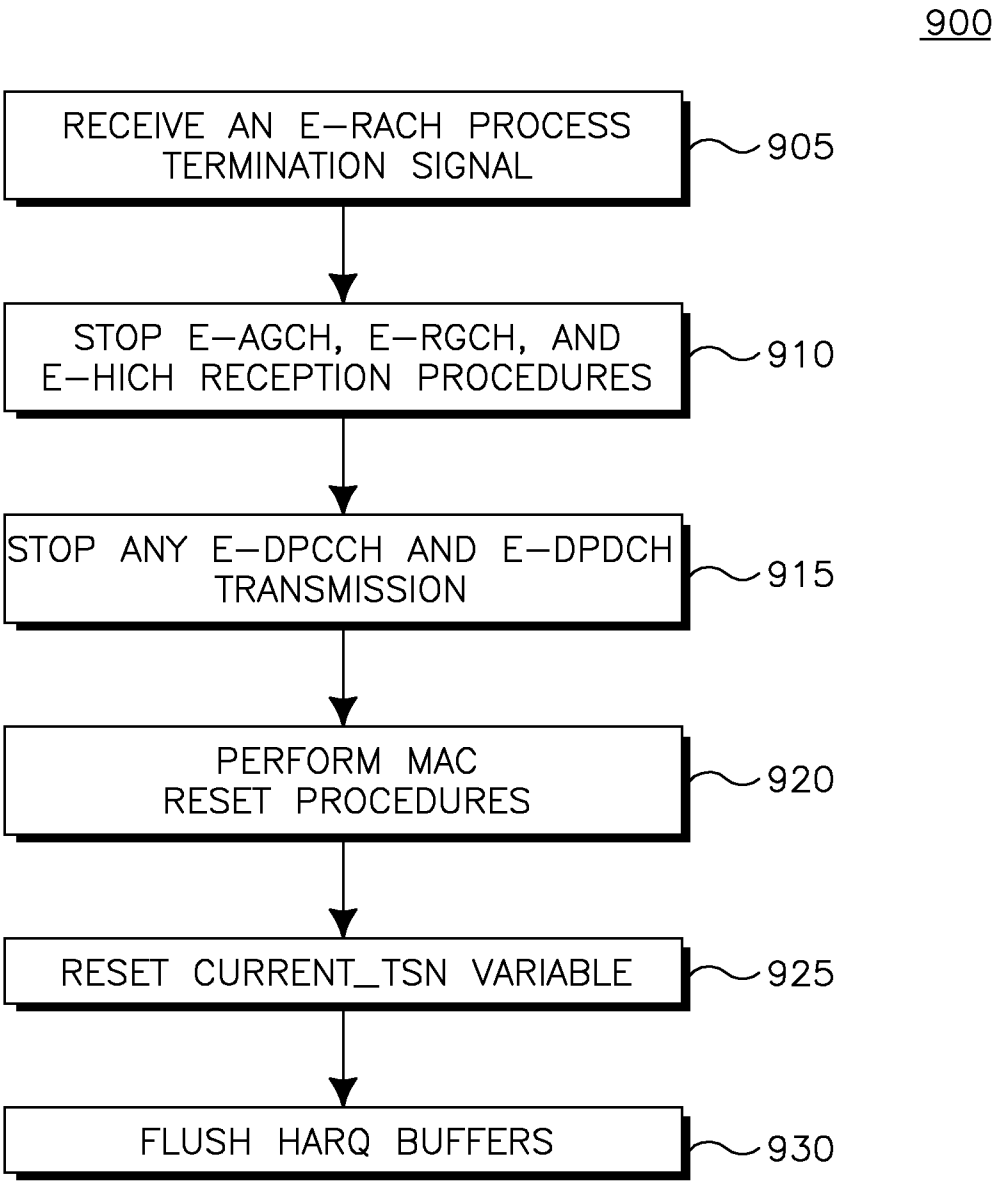
900
RECEIVE AN E-RACH PROCESS TERMINATION SIGNAL
905
STOP E-AGCH, E-RGCH, AND E-HICH RECEPTION PROCEDURES
910
STOP ANY E-DPCCH AND E-DPDCH TRANSMISSION
915
PERFORM MAC RESET PROCEDURES
920
RESET CURRENT_TSN VARIABLE
925
FLUSH HARQ BUFFERS
930

FIG. 9

METHOD AND APPARATUS FOR TERMINATING TRANSMISSION OF A MESSAGE IN AN ENHANCED RANDOM ACCESS CHANNEL

CROSS REFERENCE TO RELATED APPLICATIONS

This application is a continuation of U.S. patent application Ser. No. 12/238,910 filed Sep. 26, 2008, which claims the benefit of U.S. Provisional Application No. 60/975,985 filed on Sep. 28, 2007; U.S. Provisional Application No. 60/982,528 filed on Oct. 25, 2007; U.S. Provisional Application No. 61/018,999, filed on Jan. 4, 2008; U.S. Provisional Application No. 61/025,441 filed on Feb. 1, 2008; U.S. Provisional Application No. 61/038,576 filed on Mar. 21, 2008; U.S. Provisional Application No. 61/074,288 filed on Jun. 20, 2008; and U.S. Provisional Application No. 61/083,409 filed on Jul. 24, 2008, which are incorporated by reference as if fully set forth. This application is also related to the application referred to as Ser. No. 14/319,975 filed on the same date herewith and is incorporated by reference as if fully set forth.

FIELD OF INVENTION

The present application is related to wireless communication.

BACKGROUND

In wireless communications systems, access to radio resources is controlled by a radio network. When a wireless transmit receive unit (WTRU) has data to transmit to the network, the WTRU requires access to the radio resources before transmitting its data payload. In a Third Generation Partnership Project (3GPP) network, the WTRU may transmit on the uplink using a contentious channel known as a random access channel (RACH). Because access to the RACH is contentious, a collision might occur when multiple WTRUs are accessing the resources simultaneously.

The current RACH access procedure in the 3GPP comprises a preamble phase with power ramp-up, followed by channel acquisition information and message transmission for random access. Because the RACH is a shared channel, in order to avoid WTRUs holding the shared radio resource for a long time, only relatively short message payloads are transmitted on the RACH; this leads to a relatively small data rate. The RACH is thus used for the transmission of short control messages. Typically, the WTRUs demanding larger data rates may be configured by the network to use dedicated resources.

The data rate provided by the RACH is sufficient for the transmission of short control messages supporting mostly speech communications, however it may be inefficient for transmission of data messages associated to the new non real-time data services such as internet browsing, e-mail, etc. For such data services, the traffic is ruptured by nature and long periods of inactivity may exist between successive transmissions. For example, applications requiring frequent transmission of keep-alive messages, may result in an inefficient utilization of dedicated resources. In such cases, it may be advantageous for the network to use shared resources for data transmission instead. The difficulty however, resides in the low data rate offered by the RACH.

To overcome these difficulties, it was proposed to use the enhanced dedicated channel (E-DCH) in the CELL_FACH state to increase the data rate of the shared channel.

FIG. **1** is a diagram of an enhanced RACH (E-RACH) access. The E-RACH procedure may include, a RACH preamble phase and an E-RACH message phase. During the initial RACH preamble phase, a WTRU transmits a RACH preamble, it continues transmitting the preamble while ramping up the power of the transmission until it receives an initial resource assignment. The WTRU may also perform collision detection and resolution, if other WTRUs are attempting to access the RACH during this time. Once the WTRU has received permission to access the RACH, the WTRU may transmit data until the resources are released or the WTRU transitions to another state.

As mentioned above, it was proposed to use the E-DCH in a CELL_FACH state to increase the data rate of the shared channel. However, in the current standard, there are no methods to terminate the E-RACH message phase. Accordingly, it would be beneficial to provide a method and apparatus to terminate an E-RACH message phase in an E-RACH.

SUMMARY

A method and an apparatus is provided for terminating an E-RACH message in an E-RACH transmission. Triggers for terminating the E-RACH message are also provided. The actions upon termination of the E-RACH messages or transition to CELL_DCH state are provided in order to release the shared E-DCH resources while in the CELL_FACH state.

A method for terminating an enhanced random access channel (E-RACH) message in an E-RACH transmission determining that a buffer is empty; triggering a transmission of a scheduling information (SI) with the value of total enhanced dedicated channel (E-DCH) buffer status (TEBS) equal to zero; determining last hybrid automatic repeat request (HARQ) data transmission; and releasing the E-DCH resources allocation is provided.

A method for terminating an enhanced random access channel (E-RACH) message in an E-RACH transmission where the network waits until a HARQ buffer is empty and when the SI with a value of zero is received, the resources are released.

BRIEF DESCRIPTION OF THE DRAWINGS

A more detailed understanding may be had from the following description, given by way of example and to be understood in conjunction with the accompanying drawings wherein:

FIG. **1** is a diagram of an E-RACH access with an E-DCH;

FIG. **2** shows a wireless communication system;

FIG. **3** is a functional block diagram of a WTRU and the base station of the wireless communication system shown in FIG. **2**;

FIG. **4** is a flow diagram of a E-DCH resource allocation and de-allocation;

FIG. **5** is a diagram of triggers for starting the timer that the WTRU may initiate for the timers;

FIG. **6** is a flow diagram of a method to release E-DCH resources based on the status of a WTRU's queue or buffer;

FIG. **7** is a flow diagram of a network configured to determine termination of an E-RACH message transmission;

FIG. **8** is a flow diagram of E-DCH resources release when the WTRU transitions from the CELL_FACH state to the CELL_DCH state; and

FIG. **9** is a flow diagram for releasing the E-DCH resources while in the CELL_FACH state.

DETAILED DESCRIPTION

When referred to hereafter, the terminology "wireless transmit/receive unit (WTRU)" includes but is not limited to

a user equipment (UE), a mobile station, a fixed or mobile subscriber unit, a pager, a cellular telephone, a personal digital assistant (PDA), a computer, or any other type of user device capable of operating in a wireless environment. When referred to hereafter, the terminology "base station" includes but is not limited to a Node-B, a site controller, an access point (AP), or any other type of interfacing device capable of operating in a wireless environment.

When referred to herein, the term RACH and E-RACH may be used to describe a resource that is selected by a WTRU for uplink contention based access. The term E-RACH resource may also indicate any combination of a scrambling code, a channelization code, a timeslot, an access opportunity, or a signature sequence that are associated to an E-RACH channel in a future system architecture. The term E-RACH may also indicate the use of the E-DCH in CELL_FACH, CELL_PCH, URA_PCH states or Idle mode.

When referred to hereafter, the term enhanced medium access control (MAC)-e/es entities may refer to the MAC entities used to perform E-DCH transmission in the CELL_FACH state, which in release 8 is referred to as MAC-i/is. MAC-e/es and MAC-i/is are the MAC entities that handle the transport channel such as the enhanced dedicated transport channel (E-DCH).

FIG. **2** shows a wireless communication system **200** including a plurality of WTRUs **210**, a base station **220**, a CRNC **230**, an SRNC **240**, and a core network **250**. As shown in FIG. **2**, the WTRUs **210** are in communication with the base station **220**, which is in communication with the CRNC **230** and the SRNC **240**. Although three WTRUs **210**, one base station **220**, one CRNC **230**, and one SRNC **240** are shown in FIG. **3**, it should be noted that any combination of wireless and wired devices may be included in the wireless communication system **200**.

FIG. **3** is a functional block diagram **300** of a WTRU **210** and the base station **220** of the wireless communication system **200** of FIG. **2**. As shown in FIG. **3**, the WTRU **210** is in communication with the base station **220** and both are configured to perform a method to terminate transmission of a message in an E-RACH.

In addition to the components that may be found in a typical WTRU, the WTRU **210** includes a processor **215**, a receiver **216**, a transmitter **217**, and an antenna **218**. The processor **215** is configured to perform a method to terminate transmission of a message in an E-RACH. The receiver **216** and the transmitter **217** are in communication with the processor **215**. The antenna **218** is in communication with both the receiver **216** and the transmitter **217** to facilitate the transmission and reception of wireless data.

In addition to the components that may be found in a typical base station, the base station **220** includes a processor **225**, a receiver **226**, a transmitter **227**, and an antenna **228**. The processor **225** is configured to perform a method to terminate transmission of a message in an E-RACH. The receiver **226** and the transmitter **227** are in communication with the processor **225**. The antenna **228** is in communication with both the receiver **226** and the transmitter **227** to facilitate the transmission and reception of wireless data.

FIG. **4** is a flow diagram of E-DCH resource allocation and de-allocation **400** using triggering for a WTRU. The first state corresponds to a WTRU **210** that operates with no E-DCH resources allocated to it **405**. Once uplink (UL) data has to be transmitted, the WTRU **210** requests E-DCH resources from the network, by transmitting a preamble and waiting for the response on the acquisition indication channel (AICH). In other words, the WTRU **210** may remain in this state until it receives a positive acknowledgement (ACK) on the AICH, or a negative acknowledgement (NACK) on the AICH followed by a resource assignment index over the E-AICH, which may also be referred to as the WTRU **210** receiving an E-DCH index. After receiving the E-DCH resource assignment, the WTRU may transition to the next state wherein E-DCH resources are allocated for enhanced uplink transmissions **410**. The WTRU **210** may use these E-DCH resources for UL transmission until it receives a trigger, at which point the WTRU **210** will release the resources **415**. After the WTRU **210** releases the resources, it returns to the initial state. As will be described in further detail hereafter, the trigger may be timer based, it may be based on the WTRU buffer status, or may be based on signaling from the RNC or the Node-B **220**.

In one embodiment, the WTRU **210** may be configured to include a timer module. The timer module may include multiple timers, wherein a timer may be associated to each logical channel or each MAC-d flow. The timer module may be configured to indicate the maximum allowable transmission time for a logical channel (i.e., dedicated control channel (DCCH), dedicated traffic channel (DTCH), common control channel (CCCH), etc.). The values for the timer module may be preconfigured or signaled to the WTRU **210**. The timers may be activated upon the WTRU's **210** first transmission, once an E-DCH resource index is received. The WTRU may be configured to release an E-DCH resource upon expiry of its associated timer. For example, the WTRU **210** may be configured to release a common E-DCH resource when the maximum common E-DCH resource allocation time for the CCCH has been reached. This embodiment would allow the flexibility to configure a smaller transmission time duration for a logical channel such as the CCCH.

The timer module may also be configured based on logical channel identity and the absence of an E-DCH radio network temporary identifier (E-RNTI). More specifically, a maximum E-DCH allocation time may be allocated to the CCCH transmission when an E-RNTI is not present. If the timer expires, and the WTRU **210** that is performing a CCCH transmission does not have the E-RNTI present, the E-RACH access is terminated and the resources are released. If a CCCH transmission is occurring and an E-RNTI is present, (which may occur during period cell update procedure) then the WTRU **210** is not configured to have a maximum E-DCH allocation time and the timer will not affect the WTRU **210**.

Alternatively, the network may configure the transmission duration timer based on the presence or absence of an E-RNTI. The WTRU **210** may be configured to have a maximum E-DCH allocation time if it has data (user plane or control plane) to transmit and no E-RNTI is present. Otherwise if an E-RNTI is present the WTRU **210** is not configured with a maximum E-DCH allocation time.

FIG. **5** shows a diagram of triggers for starting the timer that the WTRU **210** may initiate for the timers T_1 and T_2 **500**. The timers such as collision resolution T_1 and CCCH timer T_2 are started according to one of the triggers **501** to **505**. This embodiment may include any combination of at least one of the shown trigger **501-505** for starting the timer **506**. The timer may start if an ACK associated to the preamble signature transmitted is received on the AICH or E-AICH **501**. The timer may start as soon as the radio resource control (RRC) provides the MAC with the timer values, and after receiving the E-DCH resource index **502**. The timer may start if the WTRU **210** starts the first dedicated physical control channel (DPCCH) preamble transmission **503**. The timer may start when the initial DPCCH transmission is completed after E-DCH transmission backoff transmission time intervals (TTIs) or the first MAC protocol data unit (PDU) is passed to the physical layer **504**. Or, the timer may start when the

WTRU **210** starts the E-DCH transmission **505**. In addition, the WTRU **210** may initiate the timer when the collision resolution E-DCH absolute grant channel (E-AGCH) carrying the WTRU **210** E-RNTI is received. Other triggers may also be used as designed.

Alternatively, the WTRU **210** timer module may be configured such that the length of time available to the WTRU **210** is based on the number of data bits that need to be transmitted. The length of the time variable to the WTRU **210** may also be based on the number of radio link controller (RLC) or MAC PDUs. Additionally, it may also be based on the number of RLC service data units (SDUs).

Alternatively, the E-RACH message duration may be fixed at either 10 msec or 20 msec (as is specified in the current 3GPP standards). As a result, the E-RACH message phase may be active for a maximum number of frames or subframes. An E-RACH message duration information element (IE) may be broadcast as part of the system information broadcast (SIB), or may be included as part of L1 signaling. For example, the E-RACH message duration IE may be transmitted with the initial resource assignment or during the collision resolution phase. In addition, the E-RACH message duration may be linked to an access service class.

Alternatively, the WTRU **210** may count the number of transmissions and retransmissions and use the count as a trigger to stop the transmission of the E-RACH message phase. For example, if the WTRU **210** is configured for repeat automatic repeat request (ARQ) type of operation and transmission on consecutive TTIs, then the WTRU may be configured to terminate the transmission of the E-RACH message phase after K retransmissions. It is noted that the value of K may be preconfigured in the WTRU, broadcasted as part of the SIB, or signaled during the E-RACH allocation phase.

FIG. **6** is a flow diagram of a method to release E-DCH resources based on the status of a WTRU's **210** queue or buffer. When the WTRU **210** has data in the transmit buffer, the WTRU **210** may transmit the data **605**. After a transmission, the WTRUs **210** may check if the transmit buffer is empty **610**. If the transmit buffer is not empty, then the WTRU **210** will transmit the data that is in the buffer **605**. If the transmit buffer is empty **610** (i.e., the Total E-DCH Buffer Status (TEBS) is equal to zero), optionally it is checked if an inactivity timer has expired **615**. If the inactivity timer has expired, then the WTRU **210** may be configured to transmit a special or reserved value of the SI where TEBS is set to zero **620**. The WTRU **210** may be configured to release E-DCH resource **630** after the inactivity timer has expired **615**, wherein the inactivity timer is started once the TEBS is equal to zero. The WTRU **210** is considered to be inactive, if no UL or downlink (DL) traffic has been received. Alternatively, the implicit release timers (i.e., the inactivity timer) may be restarted based on a trigger mechanism when the WTRU **210** decodes its H-RNTI on the high speed shared control channel (HS-SCCH). Once the inactivity timer has expired, the WTRU **210** may be configured to transmit a special or reserved value of the SI **620**. For example, the special or reserved value of the SI may comprise a TEBS with a value set to zero **620**. The SI with the TEBS set to zero may be used to signal to the network for releasing the resources. After successfully transmitting the SI and emptying the HARQ buffers **625**, the WTRU **210** releases the E-DCH resources **630**.

Alternatively, the WTRU **210** may transmit a signal to the network indicating to release the resources. The signal may comprise a special combination of the SI and a Happy Bit, a new MAC signaling, where a special combination of MAC header fields may be re-interpreted. Alternatively, a field may be added in the enhanced MAC-e header or MAC-e trailer denoting a request to terminate transmission of the E-RACH message phase. For example, the WTRU **210** may transmit this signal to the network via a reserved data description indicator (DDI) combination. In another alternative, the signal may be a new RRC message; special value of the enhanced transport format combination index (E-TFCI) field in the E-DPCCH or a special combination of the E-DPCCH fields; or, a new L1 message. The final decision to release the resources may be determined by the network; which may indicate the release of resources back to the WTRU **210**. Alternatively, the WTRU **210** may simply stop transmission of the E-DCH as a means to indicate the termination of the E-RACH message phase, at which point the network may release the radio resources.

Alternatively, the timer module may be configured to start when the WTRU **210** has transmitted all PDUs which were present when the E-RACH was initiated, or the buffer has passed a predetermined threshold level. The threshold level may be an absolute value or based on a relative measure using the initial queue size.

Releasing the resources upon the transmission of all PDUs in the buffer that pass a predetermined threshold level, may free up the E-RACH resources for other WTRUs **210**. For example, the threshold levels may be set to allow the network to tradeoff fairness between WTRUs **210** and transmission delay. These levels may be configured through system information or they may be preconfigured in the WTRU **210**.

In addition, there may be procedures for physical layer that may trigger a termination of the E-RACH message transmission. This includes cell reselection and measurements controlled by the FACH measurement occasions or detection of radio link (RL) failure.

Alternatively, the WTRU **210** may suspend all transmission during the measurement occasion. Also, the scheduler at the Node-B **220** may be aware of the measurement occasion and may also suspend any grant, ACK, or NACK downlink transmission. Upon resuming normal operation, the network may optionally transmit an initial grant so that the power control loop may be re-established. Or, the network may wait for an indication from the WTRU **210** using a preamble power ramp or similar procedure. Optionally, the WTRU **210** may indicate the reason for termination in the termination signal or the termination message. Reasons for E-RACH termination may include a RL failure and E-RACH transmission complete.

FIG. **7** shows a flow diagram of a network configured to determine termination of an E-RACH message transmission **700**. The termination of the E-RACH message phase may be established by the network based on the reception of the amount of data indicated in an initial SI **705** by the Universal Mobile Telecommunications System (UMTS) Terrestrial Radio Access Network (UTRAN). Alternatively, it may be established based on the UTRAN receiving the amount of data indicated in subsequent SIs or indicated using a different mechanism. The UTRAN may use the values of SI to determine when to terminate the message transmission. More specifically, an SI with TEBS set to zero **710** signals to the network that the WTRU **210** is releasing the resources once the transmission of data in the HARQ buffers is completed. The UTRAN releases E-DCH resources **720** after SI with TEBS set to zero is received and there is no more HARQ transmission **715**.

Alternatively, the UTRAN may simply turn off transmission of the associated F-DPCH and explicit additional signaling is not used. This approach may be used in the case where both the WTRU **210** and the network are aware that the transmission is to be terminated.

Alternatively, SI may be transmitted every time the buffer occupancy changes. Alternatively, an SI may be transmitted every time the buffer occupancy changes by a pre-defined or signaled amount (i.e., additional data is received in the buffer), even if the new data is not from higher priority logical channels. If the TEBS is equal to zero then the SI triggering mechanism may be modified to allow the SI to be transmitted. The SI with TEBS set to zero signals to the network that the WTRU is releasing the resources once the transmission of data in the HARQ buffers is completed and the UTRAN also releases the E-DCH resources. Alternatively, an SI may be transmitted in every HARQ transmission when the WTRU **210** is in CELL_FACH state or occupying E-RACH resources.

In another termination option, the UTRAN may explicitly signal the end of the E-RACH transmission. Once the UTRAN determines the end of the E-RACH message transmission, it signals to the WTRU **210** by transmitting a special value over the E-AGCH (e.g., a 0 grant). Or, the UTRAN signals to the WTRU **210** by transmitting an RRC message over the FACH or over the High Speed Downlink Shared channel (HS-DSCH) if the WTRU **210** is configured for HS-DSCH in CELL_FACH state. Alternatively, the network signals to the WTRU **210** by using L1 signaling. This may include stopping the fractional dedicated physical channel (F-DPCH) or transmitting a flag or combination of pre-determined fields on the HS-SCCH if the WTRU **210** is configured for HS-DSCH in CELL_FACH state, for example, using an HS-SCCH order.

Alternatively, the termination of the E-RACH message may be established based on a lack of activity on the enhanced dedicated physical data channel (E-DPDCH) or enhanced DPCCH (E-DPCCH) transmission.

The termination of the E-RACH part may also be established based on the status of the WTRU **210** scheduling requests. As an example, the UTRAN may monitor the received SI or Happy Bit status. If this information indicates low usage, the network may decide to terminate the current transmission of the E-RACH message so that the other WTRUs **210** may have an opportunity to access the resources. Alternatively, if this information indicates high usage and continued need with the Happy Bit set to unhappy, then the UTRAN may decide to transition the WTRU **210** to CELL_DCH state. As another alternative, the UTRAN may use the traffic volume measurement report (such as uplink RRC measurement report) to determine that the WTRU **210** does not have any further data or a small amount of data to transmit.

Alternatively, the UTRAN may implicitly signal the WTRU **210** to release the E-RACH resource by not transmitting predefined physical channels or signals for a predetermined amount of time. In other words, the WTRU **210** releases the E-RACH resources if it does not receive any transmission from the UTRAN on either channel E-AGCH destined to the WTRU **210**, E-RGCH associated with E-RACH resource that is used by the WTRU **210**, F-DPCH associated with the E-RACH resource that is used by the WTRU **210**, and/or, HS-SCCH or high speed physical downlink shared channel (HS-PDSCH) that is destined to the WTRU **210**.

Optionally, the UTRAN may indicate the reason for termination in the termination signal or termination message. Reasons for E-RACH termination may include, but are not limited to an RL failure, completion of the E-RACH transmission, and network congestion.

FIG. **8** is a flow diagram of the E-DCH resources released when the WTRU **210** transitions from the CELL FACH state to the CELL_DCH state. The WTRU **210** operates without any E-DCH resources allocated **805**. Upon receiving an E-DCH resource assignment on the AICH or E-AICH or a NACK on the AICH followed by a resource assignment index over the E-AICH, which may also be referred to as the WTRU **210** receiving an E-DCH index, the WTRU **210** may access the E-DCH resources allocated to it in the CELL FACH state **810**. The WTRU **210** retains control of the E-DCH resources until it receives a reconfiguration message, (e.g., via the FACH or the HS-DSCH), indicating that a switch to the CELL_DCH state may be performed. The E-DCH resources are then released **815**. And, the WTRU **210** may transition to the CELL_DCH state **820**. If the UTRAN reconfigures the WTRU **210** to the CELL_DCH state with dedicated E-DCH resources while the WTRU **210** is transmitting over the E-RACH, then the WTRU **210** may release the E-RACH resources at the activation time that is specified in the reconfiguration message in the case of synchronous reconfiguration. Alternatively, the WTRU **210** may release the E-RACH resources at a fixed delay prior to or after the activation time. Alternatively, the WTRU **210** may release the E-RACH resources immediately upon reception of the RRC reconfiguration message.

Additionally, the WTRU **210** may be configured to release the E-RACH resources at the same time as it configures itself for a transmission over the dedicated E-DCH resources. Alternatively, the WTRU **210** may release the E-RACH resources at a fixed delay prior to or after configuring itself for transmission using the dedicated E-DCH resources; or, release the E-RACH resources once the WTRU **210** is fully synchronized with the UTRAN with the dedicated E-DCH resources.

FIG. **9** is a flow chart of a procedure for releasing the E-DCH resources while in the CELL_FACH state or idle mode, when the E-RACH termination triggers occur. The WTRU **210** begins the E-RACH termination process **905**. The WTRU **210** may be configured to stop any E-AGCH, E-RGCH, and E-HICH reception procedures that are occurring **910**. The WTRU **210** may be further configured to stop any E-DPCCH and E-DPDCH transmission procedures that are occurring **915**. The WTRU **210** may then perform a MAC reset procedure **920** and release HARQ buffers **930**. The enhanced MAC-e/es reset procedure may include flushing the HARQ processes, discarding any remaining segments in the segmentation entity of the enhanced MAC-e/es and resetting the CURRENT_transmission sequence number (TSN) value to zero. Alternatively, if the remaining segment is from a DTCH or a DCCH logical channel the WTRU **210** may resume transmission of the segment at a remaining process. An indication may be transmitted to the SRNC **240** via Iub signaling to discard any stored segment and reset the TSN reordering numbers.

If the E-DCH has terminated and the DTCH or the DCCH transmission is active, the WTRU **210** may flush the HARQ processes **930** and discard any remaining segments in the segmentation entity of the MAC-i/is.

The other logical channels or queues of the MAC-i/is entity that do not correspond to the CCCH are not reset. The Node-B **220** may be configured to perform a reset of the MAC-is entity of the CCCH. In other words, any segment may be discarded and the expected TSN is set to its initial value. If the MAC-is entity is in the CRNC **230**, Node-B **220** uses Iub signaling indicating to the MAC-is entity to perform a reset. In addition, the MAC-i entity associated to the E-DCH resource is reset (i.e., HARQ soft buffers are flushed).

When the WTRU **210** performs a full MAC-i/is reset, the MAC-is entity in the SRNC **240** may be notified via a new Iub/Iur signaling that E-RACH access has been terminated;

thus MAC-is entity in the SRNC **240** may also perform a reset. More specifically, when the Node-B **220** terminates the E-DCH connection with the WTRU **210**, it releases the E-DCH resources, flushes the HARQ buffers, and notifies the SRNC **240** or CRNC **230** that the connection has been terminated and thus the CRNC **230** or SRNC **240** also perform a reset of the MAC. The CRNC **230** or SRNC **240** is notified via Iub or Iur signaling. A new control bit may be introduced in the Iub or Iur frame format or a new frame format may be defined to signal to the SRNC **240** or CRNC **230** the release of the resources.

Also, optionally, the reset of the MAC-i/is or only discarding of the segments may be performed after a time interval (Tr) because the termination of the E-RACH resource. The timer is also initiated in the network side. Tr may be a system configured timer signaled to the WTRU **210** via RRC message, via system information block (SIB), or preconfigured in the WTRU **210**. The timer is initiated as soon as the E-DCH resources are terminated in the WTRU **210**.

The WTRU **210** may be configured to stop the timer if it is running and if the WTRU **210** attempts to perform E-RACH access. Also, the WTRU **210** may also stop the timer, if the WTRU **210** attempts the E-RACH access and obtains the E-DCH resources assigned, or the WTRU **210** obtains the E-DCH resources assigned and resolves the contention resolution phase.

Alternatively, the WTRU **210**, the Node-B **220** and/or the RNCs may be configured with a TSN_RESET_TIMER, wherein the WTRU **210** is configured to perform a TSN reset when the timer expires. Optionally, the WTRU **210** may perform a full enhanced MAC-e/es reset procedure when the timer expires.

The E-DCH resources are released when a transition from CELL_FACH to CELL_DCH occurs.

The WTRU **210** and the RNC may reset the value of the last used TSN number (i.e., CURRENT_TSN) to the initial value upon the release of the E-DCH resource set being used by the WTRU **210**. The WTRU **210** and the RNC may each include synchronized timers, wherein the expiry of the timer signals the release of the E-DCH resources. After the timer expires and the resources are released, the WTRU **210** may reset the TSN and optionally perform a full enhanced MAC-e/es reset procedure.

Alternatively, the UTRAN may order the release of the resources. The UTRAN may signal the WTRU indicating that the resources must be released. In this case, upon reception of the message, the WTRU **210** and UTRAN reset the TSN to an initial value.

Alternatively, the TSN number may be reset upon the expiration of an inactivity timer. In this case, an inactivity timer may be started in both the WTRU **210** and the network after the last MAC-e PDU is transmitted and received, respectively. If the timer expires, the WTRU **210** and the RNC resets the TSN to its initial value. Optionally, a full enhanced MAC-e/es reset procedure may be performed.

In another alternative, the TSN number may not reset. The last TSN values used are stored in memory and continuously incremented for each new transmission, regardless of the E-DCH resource set being used or the time in which the transmission is taking place.

Alternatively, the TSN number may be set to its initial value and optionally a full enhanced MAC-e/es reset may take place when a cell reselection occurs. Resetting the TSN or the MAC-e/es may always occur after the WTRU **210** performs cell reselection. Alternatively, it may only occur when a serving radio network subsystem (SRNS) relocation occurs. The RNC may signal the TSN reset via an explicit enhanced MAC-e/es reset indicator or the WTRU **210** may implicitly detect that SRNS relocation has occurred due to the presence or the change of a new UTRAN RNTI (U-RNTI).

Although features and elements are described above in particular combinations, each feature or element may be used alone without the other features and elements or in various combinations with or without other features and elements. The methods or flow charts provided herein may be implemented in a computer program, software, or firmware tangibly embodied in a computer-readable storage medium for execution by a general purpose computer or a processor. Examples of computer-readable storage mediums include a read only memory (ROM), a random access memory (RAM), a register, cache memory, semiconductor memory devices, magnetic media such as internal hard disks and removable disks, magneto-optical media, and optical media such as CD-ROM disks, and digital versatile disks (DVDs).

Suitable processors include, by way of example, a general purpose processor, a special purpose processor, a conventional processor, a digital signal processor (DSP), a plurality of microprocessors, one or more microprocessors in association with a DSP core, a controller, a microcontroller, Application Specific Integrated Circuits (ASICs), Field Programmable Gate Arrays (FPGAs) circuits, any other type of integrated circuit (IC), and/or a state machine.

A processor in association with software may be used to implement a radio frequency transceiver for use in a wireless transmit receive unit (WTRU), user equipment (UE), terminal, base station, radio network controller (RNC), or any host computer. The WTRU may be used in conjunction with modules, implemented in hardware and/or software, such as a camera, a video camera module, a videophone, a speakerphone, a vibration device, a speaker, a microphone, a television transceiver, a hands free headset, a keyboard, a Bluetooth® module, a frequency modulated (FM) radio unit, a liquid crystal display (LCD) display unit, an organic light-emitting diode (OLED) display unit, a digital music player, a media player, a video game player module, an Internet browser, and/or any wireless local area network (WLAN) or Ultra Wide Band (UWB) module.

What is claimed is:

1. A method performed by a wireless transmit/receive unit (WTRU) to communicate with a base station using an enhanced dedicated channel (E-DCH) resource while in a cell forward access channel (CELL_FACH) state, the method comprising:

determining if a E-DCH buffer is empty;

transmitting to the base station scheduling information (SI), wherein the SI includes a total E-DCH buffer status (TEBS) equal to zero when the E-DCH buffer is determined to be empty;

determining if a hybrid automatic repeat request (HARQ) buffer is empty;

and

releasing the E-DCH resource when the transmission of the SI with the TEBS equal to zero has been made and the HARQ buffer is empty.

2. The method as in claim **1**, further comprising starting an inactivity timer when the E-DCH buffer is empty.

3. The method as in claim **2**, further comprising triggering the transmission of the SI when the inactivity timer expires.

4. The method as in claim **1**, further comprising transmitting using the E-DCH resource when a response is received on an E-DCH acquisition indication channel (E-AICH) to a preamble transmitted by the WTRU.

5. The method as in claim 1, further comprising completing an E-DCH transmission when a cell reselection or a radio link failure occurs.

6. A wireless transmit/receive unit (WTRU) capable of communicating with a base station using an enhanced dedicated channel (E-DCH) resource while in a cell forward access channel (CELL_FACH) state, the WTRU comprising:

a E-DCH buffer;

a transmitter;

a hybrid automatic repeat request (HARQ) buffer; and

a processor;

wherein the processor:

determines if the E-DCH buffer is empty;

causes the transmitter to transmit to the base station scheduling information (SI), wherein the SI includes a total E-DCH buffer status (TEBS) equal to zero for the E-DCH buffer when the processor has determined that the E-DCH buffer is empty;

determines if the HARQ buffer is empty; and

releases the E-DCH resource when the transmission of the SI with the TEBS equal to zero has been made and the HARQ buffer is empty.

7. The WTRU as in claim 6, wherein the processor completes an E-DCH transmission when a cell reselection or a radio link failure occurs.

8. The WTRU as in claim 6, wherein the processor starts an inactivity timer when the E-DCH buffer is empty.

9. The WTRU as in claim 8, wherein the transmitter transmits the SI when the inactivity timer expires.

10. The WTRU as in claim 6, wherein the transmitter transmits using the E-DCH resource when a response is received on an E-DCH acquisition indication channel (E-AICH) to a preamble transmitted by the WTRU.

11. A wireless transmit/receive unit (WTRU) capable of communicating with a base station using an enhanced dedicated channel (E-DCH) resource, the WTRU comprising:

a transmitter; and

a processor;

wherein the processor:

determines if an E-DCH buffer is empty;

transmits to the base station scheduling information (SI), wherein the SI includes a total E-DCH buffer status (TEBS) equal to zero for the E-DCH buffer when the processor has determined that the E-DCH buffer is empty;

determines if a last hybrid automatic repeat request (HARQ) data transmission has been made; and

releases the E-DCH resource when the transmission of the SI with the TEBS equal to zero has been made and the last HARQ data transmission has been made.

12. The WTRU as in claim 11, wherein the processor completes an E-DCH transmission when a cell reselection or a radio link failure occurs.

13. The WTRU as in claim 11, wherein the processor starts an inactivity timer when the E-DCH buffer is empty.

14. The WTRU as in claim 13, wherein the transmitter transmits the SI when the inactivity timer expires.

15. The WTRU as in claim 11, wherein the transmitter transmits using the E-DCH resource when a response is received on an E-DCH acquisition indication channel (E-AICH) to a preamble transmitted by the WTRU.

16. A method performed by a wireless transmit/receive unit (WTRU) to communicate with a base station using an enhanced dedicated channel (E-DCH) resource while in a cell forward access channel (CELL_FACH) state, the method comprising:

determining that a E-DCH buffer is empty;

transmitting to the base station scheduling information (SI), wherein the SI includes a total E-DCH buffer status (TEBS) equal to zero for the empty E-DCH buffer;

determining if a last hybrid automatic repeat request (HARQ) buffer is empty; and

releasing the E-DCH resource when the transmission of the SI with the TEBS equal to zero has been made and the last HARQ buffer is empty.

17. The method as in claim 16, further comprising starting an inactivity timer when the E-DCH buffer is empty.

18. The method as in claim 17, further comprising triggering the transmission of the SI when the inactivity timer expires.

19. The method as in claim 16, further comprising transmitting using the E-DCH resource when a response is received on an E-DCH acquisition indication channel (E-AICH) to a preamble transmitted by the WTRU.

20. The method as in claim 16, further comprising completing an E-DCH transmission when a cell reselection or a radio link failure occurs.

21. A method performed by a wireless transmit/receive unit (WTRU) to communicate with a base station using an enhanced dedicated channel (E-DCH) resource while in a cell forward access channel (CELL_FACH) state, the method comprising:

determining that a E-DCH buffer is empty;

transmitting to the base station scheduling information (SI), wherein the SI includes a total E-DCH buffer status (TEBS) equal to zero for the empty E-DCH buffer; and

releasing the E-DCH resource when the transmission of the SI with the TEBS equal to zero has been made and a hybrid automatic repeat request (HARQ) buffer is empty.

22. The method as in claim 21, further comprising starting an inactivity timer when the E-DCH buffer is empty.

23. The method as in claim 22, further comprising triggering the transmission of the SI when the inactivity timer expires.

24. The method as in claim 21, further comprising transmitting using the E-DCH resource when a response is received on an E-DCH acquisition indication channel (E-AICH) to a preamble transmitted by the WTRU.

25. The method as in claim 21, wherein an E-DCH transmission is completed when a cell reselection or a radio link failure occurs.

26. A wireless transmit/receive unit (WTRU) capable of communicating with a base station using an enhanced dedicated channel (E-DCH) resource while in a cell forward access channel (CELL_FACH) state, the WTRU comprising:

a E-DCH buffer;

a transmitter;

a hybrid automatic repeat request (HARQ) buffer; and

a processor;

wherein the processor:

determines if the E-DCH buffer is empty;

causes the transmitter to transmit to the base station scheduling information (SI), wherein the SI includes a total E-DCH buffer status (TEBS) equal to zero for the E-DCH buffer when the processor has determined that the E-DCH buffer is empty; and

releases the E-DCH resource when the transmission of the SI with the TEBS equal to zero has been made and the HARQ buffer is empty.

27. The WTRU as in claim 26, wherein the processor completes an E-DCH transmission when a cell reselection or a radio link failure occurs.

28. The WTRU as in claim **26**, wherein the processor starts an inactivity timer when the E-DCH buffer is empty.

29. The WTRU as in claim **28**, wherein the processor causes the transmitter to transmit the SI when the inactivity timer expires.

30. The WTRU as in claim **26**, wherein the transmitter transmits using the E-DCH resource when a response is received on an E-DCH acquisition indication channel (E-AICH) to a preamble transmitted by the WTRU.

31. A wireless transmit/receive unit (WTRU) capable of communicating with a base station using an enhanced dedicated channel (E-DCH) resource, the WTRU comprising:

a transmitter; and

a processor;

wherein the processor:

determines if an E-DCH buffer is empty;

causes the transmitter to transmit to the base station scheduling information (SI), wherein the SI includes a total E-DCH buffer status (TEBS) equal to zero for the E-DCH buffer when the processor has determined that the E-DCH buffer is empty; and

releases the E-DCH resource when the transmission of the SI with the TEBS equal to zero has been made and a last hybrid automatic repeat request (HARQ) data transmission has been made.

32. The WTRU as in claim **31**, the processor completes an E-DCH transmission when a cell reselection or a radio link failure occurs.

33. The WTRU as in claim **31**, wherein the processor starts an inactivity timer when the E-DCH buffer is empty.

34. The WTRU as in claim **33**, wherein the processor causes the transmitter to transmit the SI when the inactivity timer expires.

35. The WTRU as in claim **31**, wherein the transmitter transmits using the E-DCH resource when a response is received on an E-DCH acquisition indication channel (E-AICH) to a preamble transmitted by the WTRU.

36. A method performed by a wireless transmit/receive unit (WTRU) to communicate with a base station using an enhanced dedicated channel (E-DCH) resource while in a cell forward access channel (CELL_FACH) state, the method comprising:

determining that a E-DCH buffer is empty;

transmitting to the base station scheduling information (SI), wherein the SI includes a total E-DCH buffer status (TEBS) equal to zero for the empty E-DCH buffer; and

releasing the E-DCH resource when the transmission of the SI with the TEBS equal to zero has been made and a last hybrid automatic repeat request (HARQ) buffer is empty.

37. The method as in claim **36**, further comprising starting an inactivity timer when the E-DCH buffer is empty.

38. The method as in claim **37**, further comprising triggering the transmission of the SI when the inactivity timer expires.

39. The method as in claim **36**, further comprising transmitting using the E-DCH resource when a response is received on an E-DCH acquisition indication channel (E-AICH) to a preamble transmitted by the WTRU.

40. The method as in claim **36**, further comprising completing an E-DCH transmission when a cell reselection or a radio link failure occurs.

41. A method performed by a wireless transmit/receive unit (WTRU) to communicate with a base station using an enhanced dedicated channel (E-DCH) resource while in a cell forward access channel (CELL_FACH) state, the method comprising:

transmitting to the base station scheduling information (SI) including a total E-DCH buffer status (TEBS) equal to zero; and

releasing the E-DCH resource when the transmission of the SI with the TEBS equal to zero has been made and a hybrid automatic repeat request (HARQ) buffer is empty.

42. The method as in claim **41**, further comprising starting an inactivity timer when the E-DCH buffer is empty.

43. The method as in claim **42**, further comprising triggering the transmission of the SI when the inactivity timer expires.

44. The method as in claim **41**, further comprising transmitting using the E-DCH resource when a response is received on an E-DCH acquisition indication channel (E-AICH) to a preamble transmitted by the WTRU.

45. The method as in claim **41**, further comprising completing an E-DCH transmission when a cell reselection or a radio link failure occurs.

46. An apparatus capable of communicating with a base station using an enhanced dedicated channel (E-DCH) resource while in a cell forward access channel (CELL_FACH) state, the apparatus comprising:

an E-DCH buffer;

a transmitter;

a hybrid automatic repeat request (HARQ) buffer; and

a processor,

wherein the processor:

causes the transmitter to transmit to the base station scheduling information (SI) including a total E-DCH buffer status (TEBS) equal to zero; and

releases the E-DCH resource when the transmission of the SI with the TEBS equal to zero has been made and the HARQ buffer is empty.

47. The apparatus as in claim **46**, wherein the processor completes an E-DCH transmission when a cell reselection or a radio link failure occurs.

48. The apparatus as in claim **46**, wherein the processor starts an inactivity timer when the E-DCH buffer is empty.

49. The apparatus as in claim **48**, wherein the processor causes the transmitter to transmit the SI when the inactivity timer expires.

50. The apparatus as in claim **46**, wherein the processor causes the transmitter to transmit an E-DCH transmission to the base station when a response is received on an E-DCH acquisition indication channel (E-AICH) to a preamble transmitted by the WTRU.

51. A wireless transmit/receive unit (WTRU) capable of communicating with a base station using an enhanced dedicated channel (E-DCH) resource, the WTRU comprising:

a transmitter; and

a processor,

wherein the processor:

causes the transmitter to transmit to the base station scheduling information (SI) including a total E-DCH buffer status (TEBS) equal to zero; and

releases the E-DCH resource when the transmission of the SI with the TEBS equal to zero has been made and a last hybrid automatic repeat request (HARQ) data transmission has been made.

52. The WTRU as in claim **51**, wherein the processor completes an E-DCH transmission when a cell reselection or a radio link failure occurs.

53. The WTRU as in claim **51**, wherein the processor starts an inactivity timer when the E-DCH buffer is empty.

54. The WTRU as in claim **53**, wherein the processor causes the transmitter to transmit the SI when the inactivity timer expires.

55. The WTRU as in claim **51**, wherein the transmitter transmits using the E-DCH resource to the base station when a response is received on an E-DCH acquisition indication channel (E-AICH) to a preamble transmitted by the WTRU.

56. A method performed by a wireless transmit/receiver unit (WTRU) to communicate with a base station using an enhanced dedicated channel (E-DCH) resource while in a cell forward access channel (CELL_FACH) state, the method comprising:

transmitting to the base station scheduling information (SI) including a total E-DCH buffer status (TEBS) equal to zero; and

releasing the E-DCH resource when the transmission of the SI with the TEBS equal to zero has been made and a last hybrid automatic repeat request (HARQ) buffer is empty.

57. The method as in claim **56**, further comprising starting an inactivity timer when the E-DCH buffer is empty.

58. The method as in claim **57**, further comprising triggering the transmission of the SI when the inactivity timer expires.

59. The method as in claim **56**, further comprising transmitting using the E-DCH resource to the base station when a response is received on an E-DCH acquisition indication channel (E-AICH) to a preamble transmitted by the WTRU.

60. The method as in claim **56**, further comprising completing an E-DCH transmission when a cell reselection or a radio link failure occurs.

61. An apparatus comprising:

a receiver;

a transmitter; and

a processor,

wherein the processor:

allocates an enhanced uplink (EU) resource and an associated hybrid automatic repeat request (HARQ) process for a wireless transmit receive unit (WTRU) based on a request received from the WTRU by the receiver;

causes the transmitter-to transmit to the WTRU information regarding the allocated EU resource, and

releases the allocated EU resource when a scheduling information (SI) is received from the WTRU by the receiver with an E-DCH buffer status (TEBS) equal to zero and a HARQ transmission associated with the HARQ process is completed.

62. The apparatus of claim **61**, wherein the processor causes the transmitter to transmit the allocated EU resources information to the WTRU via an enhanced acquisition indication channel.

63. The apparatus of claim **61**, wherein the receiver receives a random access channel preamble from the WTRU and the transmitter transmits a response to the random access channel preamble prior to the transmission of the allocated EU resources information.

64. The apparatus of claim **63**, wherein the receiver receives EU data from the WTRU after the transmission of the allocated EU resources information.

65. The apparatus of claim **64**, wherein the HARQ process generates acknowledgments (ACKs) and negative acknowledgements (NACKs) in response to the received EU data, and the transmitter transmits the HARQ ACKs and NACKs to the WTRU.

66. The apparatus of claim **61**, wherein the HARQ process is completed when a HARQ buffer controlled by the HARQ process is empty.

67. The apparatus of claim **61**, wherein the apparatus is a base station.

68. A method performed by a base station to communicate with a wireless transmit/receive unit (WTRU), the method comprising:

receiving a request from the WTRU;

allocating an enhanced uplink (EU) resource and an associated hybrid automatic repeat request (HARQ) process for the WTRU based on the received request;

transmitting information regarding the allocated EU resources to the WTRU;

and

releasing the allocated EU resource when a scheduling information (SI) is received from the WTRU with an E-DCH buffer status (TEBS) equal to zero and a HARQ transmission associated with the HARQ process is completed.

69. The method of claim **68**, further comprising transmitting the allocated EU resources information to the WTRU via an enhanced acquisition indication channel.

70. The method of claim **68**, further comprising:

receiving a random access channel preamble from the WTRU; and

transmitting a response to the random access channel preamble prior to the transmission of the allocated EU resources information.

71. The method of claim **70**, further comprising:

receiving EU data from the WTRU after the transmission of the allocated EU resources information.

72. The method of claim **71**, further comprising:

generating, by the HARQ process, acknowledgments (ACKs) and negative acknowledgements (NACKs) in response to the received EU data; and

transmitting the HARQ ACKs and NACKs to the WTRU.

73. The method of claim **68**, wherein the HARQ process is completed when a HARQ buffer controlled by the HARQ process is empty.

* * * * *