UNITED STATES PATENT AND TRADEMARK OFFICE

BEFORE THE PATENT TRIAL AND APPEAL BOARD

LG ELECTRONICS INC.

Petitioner,

v.

PANTECH WIRELESS, LLC

Patent Owner.

Case IPR2023-01267

U.S. Patent No. 9,313,809

DECLARATION OF DR. BERTRAND HOCHWALD IN SUPPORT OF PETITION FOR *INTER PARTES* REVIEW OF U.S. PATENT NO. 9, 313,809

TABLE OF CONTENTS

I. INTRODUCTION 1
II. QUALIFICATIONS 6
III. LEGAL UNDERSTANDING 11
A. My Understanding of Claim Construction 11
B. My Understanding of Obviousness 12
C. My Understanding of Written Description and Enablement 17
D. My Understanding of the Priority Date of a Patent for Prior Art Purposes 18
IV. BACKGROUND OF THE TECHNOLOGY 19
V. '809 PATENT AND PROSECUTION HISTORY 24
A. Overview of the '809 Patent 24
B. Prosecution History 29
VI. THE '809 PATENT PRIORITY DATE 32
VII. LEVEL OF ORDINARY SKILL 34
VIII. CLAIM CONSTRUCTION 36
IX. GROUNDS OF UNPATENTABILITY 37
A. Ground 1: Wager in view of TS25.321 (Claims 1, 4, 6, 10) 40
1. Wager's Effective Date 40
2. Wager 47
3. TS25.321; Motivation to Modify Wager with TS25.321's Teachings 51
4. Invalidity of Claims 1, 4, 6, 10 Over Wager in view of TS25.321 60
(a) Element [1.pre] 60
(b) Element [1.a] 67
(c) Element [1.b] 74
(d) Element [1.c] 82
(e) Element [1.d] 91
(f) Claim 4 102
(g) Element [6.pre] 108
(h) Element [6.a] 108
(i) Element [6.b] 108
(j) Element [6.c] 111
(k) Element [6.d] 111
(l) Element [6.e] 114
(m) Element [6.f] 114
(n) Element [6.g] 115
(o) Element [6.h] 116
(p) Claim 10 117
B. Ground 2: Lee in view of Nokia and TS25.321 (Claims 1, 4, 6, 10) 117
1. Lee 120

Table of Contents
(continued)

Page

2. Nokia; Motivation to Modify Lee with Nokia's Teachings 121
3. TS25.321; Motivation to Modify Lee (and Nokia) with TS25.321's Teachings 127
4. Invalidity of Claims 1, 4, 6, 10 Over Lee in View of Nokia and TS25.321 134
(a) Element [1.pre] 134
(b) Element [1.a] 140
(c) Element [1.b] 144
(d) Element [1.c] 148
(e) Element [1.d] 154
(f) Claim 4 160
(g) Element [6.pre] 164
(h) Element [6.a] 164
(i) Element [6.b] 165
(j) Element [6.c] 167
(k) Element [6.d] 167
(l) Element [6.e] 168
(m) Element [6.f] 168
(n) Element [6.g] 169
(o) Element [6.h] 169
(p) Claim 10 170

C. Grounds 3-4: Grounds 1-2 in view of Sarkkinen (Claims 2-3, 5, 7-9) 171
1. Sarkkinen 171
2. Motivation to Modify Wager (in view of TS25.321) with Sarkkinen's Teachings 174
3. Motivation to Modify Lee (in view of Nokia/TS25.321) with Sarkkinen's Teachings 180
4. Claims 2-3/8-9: Inactivity Timer Teachings 182
5. Claims 5/7: Radio Link Failure Teachings 187

D. Grounds 5-6: Grounds 1-2 in view of TS25.331 (Claims 5/7) 191
1. TS25.331 191
2. Motivation to Modify Wager (and TS25.321) with TS25.331's Teachings 194
3. Motivation to Modify Lee (in view of Nokia/TS25.321) with TS25.331's Teachings 196
4. Claims 5/7 199

E. Grounds 7-12: Grounds 1-6 in view of Chun 201

X. SECONDARY CONSIDERATIONS 205

XI. CONCLUSION 206

I. INTRODUCTION

1. I have been retained by LG Electronics Inc. (which I will refer to as "LGE") to provide my opinions on certain issues related to U.S. Patent No. 9,313,809 (the "'809 patent," which I understand has been designated as Exhibit 1001) in connection with the above-captioned *inter partes* review (IPR) proceeding. In particular, I have been asked to provide my insights, analysis, and opinions regarding whether claims 1-10 of the '809 patent ("Challenged Claims") are obvious over the prior art references identified below and as to whether persons interested and ordinarily skilled in the subject matter or art exercising reasonable diligence could have located these references.

2. I understand the '809 patent is titled "Method and apparatus for terminating transmission of a message in an enhanced random access channel" identifies as its named inventors Benoit Pelletier, Diana Pani, Rocco DiGirolamo, Christopher R. Cave, Vincent Roy, Paul Marinier, and Eldad M. Zeira, and is currently owned by Pantech Wireless, LLC ("Pantech"). I have considered the '809 patent.

3. I understand that the file history of the '809 patent has been designated as Exhibit 1002. I have considered this file history, and I will refer to it as the "'809 File History" or by its exhibit number. I also considered the prosecution history of

the ’809’s parent (the ’104 patent), which I will refer to as “’104 File History” or by its exhibit number.

4. I understand that the ’809 patent was filed as U.S. Patent Application No. 14/319,608 on June 30, 2014.

5. I have considered the following non-exhaustive list of references in preparing my declaration. I have been instructed to assume that each of these references qualifies as prior art.

- U.S. Patent Application Publication No. 2009/0225709 to Wager (“Wager”), titled “Managing Uplink Resources in a Cellular Radio Communications System,” filed December 5, 2008 and published September 10, 2009. I understand that a copy of this reference has been designated as Exhibit 1005.
- U.S. Provisional Application No. 61/015,316 to Wager (“Wager-Prov.”), titled “Method and Arrangement in a Telecommunication System,” filed December 20, 2007. I understand that a copy of this reference has been designated as Exhibit 1006.
- International Publication No. WO 2007/078155 to Lee (“Lee”), titled “Method for Scheduling Radio Resources in Mobile Communication System,” filed January 4, 2007 and published July 12, 2007. I understand that a copy of this reference has been designated as Exhibit 1007.

- R2-073254, *Further discussion on enhanced CELL_FACH in REL8,* 3GPP TSG-RAN WG2#59 (dated August 20-24, 2007) ("Nokia")**.** I understand that a copy of this reference has been designated as Exhibit 1008.
- 3GPP **TS 25.321 v7.5.0 (2007-06) ("TS25.321")**, 3rd Generation Partnership Project; Technical Specification Group Radio Access Network; Access Control (MAC) Protocol Specification (Release 7). I understand that a copy of this reference has been designated as Exhibit 1009.
- U.S. Patent Application Publication No. 2006/0176845 to Sarkkinen ("Sarkkinen"), titled "User Equipment-Based Resource Management Method and System," filed January 5, 2006 and published August 10, 2006. I understand that a copy of this reference has been designated as Exhibit 1010.
- 3GPP TS 25.331 v7.5.0 (2007-06) ("TS25.331"), 3rd Generation Partnership Project; Technical Specification Group Radio Access Network, 3GPP Technical Specification. I understand that a copy of this reference has been designated as Exhibit 1011.
- U.S. Patent Application Publication No. 2006/0251027 to Chun ("Chun"), titled "Communicating Control Information in Mobile Communication System," filed May 4, 2006 and published November 9, 2006. I understand that a copy of this reference has been designated as Exhibit 1012.

- U.S. Patent Application Publication No. 2009/0131052 to Hakola ("Hakola"), titled "Method and Apparatus for Providing Cell Re-selection," filed November 5, 2008 and published May 21, 2009. I understand that a copy of this reference has been designated as Exhibit 1013.
- U.S. Provisional Application No. 60/985,537 to Hakola ("Hakola-Prov."), titled "Method and Apparatus for Providing Cell Re-selection" filed November 5, 2007. I understand that a copy of this reference has been designated as Exhibit 1014.
- International Publication No. WO 2008/081222 to Lindskog ("Lindskog"), titled "Next Data Indicator Handling," filed December 28, 2006 and published July 10, 2008. I understand that a copy of this reference has been designated as Exhibit 1015.
- International Publication No. WO 2005/018241 to Seidel ("Seidel"), titled "Time Monitoring of Packet Retransmissions During Soft Handover," filed June 17, 2004 and published July 14, 2005. I understand that a copy of this reference has been designated as Exhibit 1016.
- U.S. Patent Application Publication No. 2009/0006778 to Sidi ("Sidi"), titled "Methods and Apparatus for H-ARQ Process Memory Management," filed June 29, 2007 and published January 1, 2009. I understand that a copy of this reference has been designated as Exhibit 1017.

- U.S. Patent Application Publication No. 2005/0276266 to Terry ("Terry-266"), titled "Method and Apparatus for Dynamically Adjusting Data Transmission Parameters and Controlling H-ARQ Processes," filed May 27, 2005 and published December 15, 2005. I understand that a copy of this reference has been designated as Exhibit 1018.
- International Publication No. WO 2009/022855 to Sung ("Sung"), titled "Method for Transmitting VOIP Packet," filed August 13, 2008 and published February 19, 2009. I understand that a copy of this reference has been designated as Exhibit 1019.
- U.S. Patent Application Publication No. 2005/0251722 to Terry ("Terry-722"), titled "Method and Apparatus for Assigning Hybrid-Automatic Repeat Request Processes," filed May 5, 2005 and published November 10, 2005. I understand that a copy of this reference has been designated as Exhibit 1020.

6. I am being compensated by LGE at my standard hourly consulting rate of $675 for my time on this matter. My compensation is not dependent on the outcome of this proceeding.

7. In forming my opinions, I relied on the documents cited in this declaration and the documents identified in the attached Appendix B. These documents comprise patents, file histories, printed publications, and other related documents. As discussed below, each document is a type that experts in my field

would have reasonably relied upon when forming their opinions. Further, experts in my field would have had access to each document either through the applicable patent offices and/or well-known libraries, conferences, or publications in the field. My opinions are also based upon my personal and professional experience.

8. In parallel with this declaration, I have prepared declarations for IPR2023-01272 and IPR2023-01273. I also understand that declarations are being prepared by other experts in IPR2023-01268, IPR2023-01269, IPR2023-01270, and IPR2023-01271. Due to overlap in subject matter and prior art references and similarities in corresponding analyses, I understand that some parts of my declaration may bear superficial similarities to documents filed in these other IPRs, but all analysis and opinions presented herein are my own.

II. QUALIFICATIONS

9. My qualifications for forming the opinions in this report are summarized here and also noted in my Curriculum Vitae ("CV"), which is submitted as **Appendix A**.

10. In 1995, I received a Ph.D. in Electrical Engineering from Yale University. My Ph.D. work involved the analysis and processing of electromagnetic and audio signals for the estimation of the location of electromagnetic and audio sources. In 1993, I received a M.A. in Statistics from Yale University. My primary area of study was Signal Processing and Communications. I received a M.S. in

Electrical Engineering from Duke University in 1986, and a B.S. in Engineering from Swarthmore College in 1984.

11. I have twenty-eight years of combined industry and academic experience in the research and design of hardware, software, and systems for various technologies, including electronic devices, sensors, signal and image processing, networking and wireless communications. I have worked in various industry jobs, including at the Department of Defense, Bell Labs, and a start-up in California before joining the University of Notre Dame in 2011. As I explain below, much of my work has been in the general areas of audio/video signal processing and communications.

12. My most recent appointment, starting in 2011, is with the University of Notre Dame, where I am currently a Freimann Chaired Professor of Electrical Engineering. I have taught both graduate and undergraduate classes in signal processing, information theory, communications, and in systems theory. I have also taught courses in electronics, analog and digital signal sensing, processing, computation, and electronic forms of wireline and wireless networking and communications. My primary areas of research include the design and analysis of wireless systems, sensors, and signal processing. I advise graduate students who are attaining Ph.D. degrees through research and coursework. My research work now

includes processing of high data rate signals (similar to those used to transmit and receive coded signals) in communication systems.

13. An example of my current work at the University includes a project that I lead called RadioHound distributed spectrum sensor system for remote monitoring using radio signals, which is a multi-year effort involving several students, faculty, and technicians. Ex. 1034 (https://wireless.nd.edu/research/radiohound-distributed-spectrum-sensing/) (last accessed: July 12, 2023). The RadioHound system captures data from hundreds of sensors and displays it in a real-time setting for human interpretation and assessment. This project, which is funded by government and industrial sponsors, involves the design of hardware sensors, and software communications transceivers. The project has become an educational and research tool used by laboratories inside and outside the University of Notre Dame.

14. Prior to Notre Dame, I worked from 2005-2010 at Beceem Communications, a 4G WiMax and LTE cellular communication chipset start-up company in Santa Clara, California, where I was Chief Scientist and Vice President of Systems Engineering. I was an integral part of the chipset development team. Beceem was bought by Broadcom Corporation in 2010 and no longer exists as a separate company. Several aspects of channel coding and wireless communications for our products were developed within this team.

15. From 1996-2005, I worked at Lucent Bell Laboratories in New Jersey, where I was a Distinguished Member of the Technical Staff doing research into various communication and networking systems. For example, my work in Bell Labs included wireless communications and multi-antenna signal processing and coding.

16. Before Bell Laboratories, I was a Visiting Assistant Professor at the University of Illinois in Urbana-Champaign during the 1995-1996 school year, where I worked on a broad range of research topics related to signal processing and wireless communications.

17. Prior to completing my Ph.D., during 1986-1989 I worked at the Department of Defense as a system engineer for signal processing and wireless communication systems. In this role I designed wireless communication equipment for audio and video signal monitoring and processing. Much of this work is classified for security reasons.

18. As a result of my research, I have obtained 50 patents, and I have published more than one-hundred articles in scholarly journals, many of them within the journals of the Institute of Electrical and Electronic Engineers (IEEE), one of the premier societies for electrical engineers. I have been an invited and plenary speaker at several international conferences throughout the world and have received awards and recognition for my research and publications. An example relevant publication

includes B. Hochwald and S. ten Brink, "Achieving near-capacity on a multiple-antenna channel," *IEEE Transactions on Communications*, vol. 53, pp. 389-399, March 2003. An example relevant publication includes A. Ashikhmin, A. van Wijngaarden, Z. Haibo, B. Hochwald, T. Marzetta, V. Purohit, C. Qinghong, P. Wilford, S-R. Zhou, M. Zuniga, E. Zuranski, "Design and development of a terrestrial digital video broadcast demodulation core: An international collaborative effort," *Bell Labs Technical Journal*, vol. 12, pp. 97-118, 2007.

19. Since 2012, I have engaged in consulting work as an expert in various litigation matters including acoustic echo cancelling, multi-antenna technologies, cellular and wireless local-area-net standards and technologies, and touch-screen technologies. I have served as an expert on behalf of both plaintiffs and defendants in patent cases. I have served as a technology expert in various aspects of the litigation process, including trade secret disputes, trial testimony, *Markman* hearings, and IPRs.

20. Some of my patents deal with coding for multi-antenna communications. An example is US Patent No. 6,363,121 (Ex. 1041), which describes multidimensional constellations with a unitary structure for transmission across multiple antennas.

III. LEGAL UNDERSTANDING

A. My Understanding of Claim Construction

21. I have been informed that patent claims are construed from the viewpoint of a person of ordinary skill in the art of the patent at the time of the invention. I have been informed that patent claims generally should be interpreted consistent with their plain and ordinary meaning as understood by a person of ordinary skill in the art in the relevant time period (*i.e.*, at the time of the purported invention, or the so called "effective filing date" of the patent application), after reviewing the patent claim language, the specification, and the prosecution history (*i.e.*, the intrinsic record).

22. I have further been informed that a person of ordinary skill in the art must read the claim terms in the context of the claim itself, as well as in the context of the entire patent specification. I understand that in the specification and prosecution history, the patentee may specifically define a claim term in a way that differs from the plain and ordinary meaning. I understand that the prosecution history of the patent is a record of the proceedings before the U.S. Patent and Trademark Office, and may contain explicit representations or definitions made during prosecution that affect the scope of the patent claims. I understand that an applicant may, during the course of prosecuting the patent application, limit the scope of the claims to overcome prior art or to overcome an examiner's rejection, by

clearly and unambiguously arguing to overcome or distinguish a prior art reference, or clearly and unambiguously disavowing claim coverage.

23. In interpreting the meaning of the claim language, I understand that a person of ordinary skill in the art may also consider "extrinsic" evidence, including expert testimony, inventor testimony, dictionaries, technical treatises, other patents, and scholarly publications. I understand this evidence is considered to ensure that a claim is construed in a way that is consistent with the understanding of those of ordinary skill in the art at the time of the claimed invention. For example, this can be useful for a technical term whose meaning may differ from its ordinary English meaning. I understand that extrinsic evidence may not be relied on if it contradicts or varies the meaning of claim language provided by the intrinsic evidence, particularly if the applicant has explicitly defined a term in the intrinsic record.

B. My Understanding of Obviousness

24. I understand that a claim may be invalid if the subject matter described by the claim as a whole would have been obvious to a hypothetical person of ordinary skill in the art in view of a prior art reference or in view of a combination of references at the time the claimed invention was made. Therefore, I understand that obviousness is determined from the perspective of a hypothetical person of ordinary skill in the art and that the asserted claims of the patent should be read from the point of view of such a person at the time the claimed invention was made. I

further understand that a hypothetical person of ordinary skill in the art is assumed to know and to have all relevant prior art in the field of endeavor covered by the patent in suit.

25. I have been informed that there are two criteria for determining whether prior art is analogous and thus can be considered prior art: (1) whether the art is from the same field of endeavor, regardless of the problem addressed, and (2) if the reference is not within the field of the patentee's endeavor, whether the reference still is reasonably pertinent to the particular problem with which the patentee is involved. I have also been informed that the field of endeavor of a patent is not limited to the specific point of novelty, the narrowest possible conception of the field, or the particular focus within a given field. I have also been informed that a reference is reasonably pertinent if, even though it may be in a different field from that of the patentee's endeavor, it is one which, because of the matter with which it deals, logically would have commended itself to a patentee's attention in considering their problem.

26. I have also been advised that an analysis of whether a claimed invention would have been obvious should be considered in light of the scope and content of the prior art, the differences (if any) between the prior art and the claimed invention, and the level of ordinary skill in the pertinent art involved. I understand as well that a prior art reference should be viewed as a whole.

27. I have also been advised that in considering whether a claimed invention could be obvious over a combination of prior art references, I may assess whether there are apparent reasons to combine known elements in the prior art in the manner claimed in view of interrelated teachings of multiple prior art references, the effects of demands known to the design community or present in the marketplace, and/or the background knowledge possessed by a person of ordinary skill in the art. I understand that other principles may be relied on in evaluating whether a claimed invention would have been obvious, and that these principles include the following:

- A combination of familiar elements according to known methods is likely to be obvious when it does no more than yield predictable results;
- When a device or technology is available in one field of endeavor, design incentives and other market forces can prompt variations of it, either in the same field or in a different one, so that if a person of ordinary skill can implement a predictable variation, the variation is likely obvious;
- If a technique has been used to improve one device, and a person of ordinary skill in the art would recognize that it would improve similar devices in the same way, using the technique is obvious unless its actual application is beyond their skill;
- An explicit or implicit teaching, suggestion, or motivation to combine two prior art references to form the claimed combination may demonstrate

obviousness, but proof of obviousness does not depend on or require showing a teaching, suggestion, or motivation to combine;

- Market demand, rather than scientific literature, can drive design trends and may show obviousness;
- In determining whether the subject matter of a patent claim would have been obvious, neither the particular motivation nor the avowed purpose of the named inventor controls whether the claim is obvious;
- One of the ways in which a patent's subject can be proved obvious is by noting that there existed at the time of invention a known problem for which there was an obvious solution encompassed by the patent's claims;
- Any need or problem known in the field of endeavor at the time of invention and addressed by the patent can provide a reason for combining the elements in the manner claimed;
- "Common sense" teaches that familiar items may have obvious uses beyond their primary purposes, and in many cases a person of ordinary skill will be able to fit the teachings of multiple patents together like pieces of a puzzle;
- A person of ordinary skill in the art is also a person of ordinary creativity, and is not an automaton;
- A patent claim can be proved obvious by showing that the claimed combination of elements was "obvious to try," particularly when there is a

design need or market pressure to solve a problem and there are a finite number of identified, predictable solutions such that a person of ordinary skill in the art would have had good reason to pursue the known options within his or her technical grasp; and

- One should be cautious of using hindsight in evaluating whether a claimed invention would have been obvious.

28. I further understand that, in making a determination as to whether the claimed invention would have been obvious to a person of ordinary skill, the Board may consider certain objective factors if they are present, such as: commercial success of products practicing the claimed invention; long-felt but unsolved need; teaching away; unexpected results; copying; and praise by others in the field. These factors are generally referred to as "secondary considerations" or "objective indicia" of nonobviousness. I understand, however, that for such objective evidence to be relevant to the obviousness of a claim, there must be a causal relationship (called a "nexus") between the claim and the evidence and that this nexus must be based on a novel element of the claim rather than something in the prior art. I also understand that even when they are present, secondary considerations may be unable to overcome primary evidence of obviousness (such as motivation to combine with predictable results) that is sufficiently strong.

C. My Understanding of Written Description and Enablement

29. I understand that the written description and enablement requirements are set forth in Pre-AIA 35 U.S.C. §112. This section provides:

> The specification shall contain a written description of the invention, and of the manner and process of making and using it, in such full, clear, concise, and exact terms as to enable any person skilled in the art to which it pertains, or with which it is most nearly connected, to make and use the same, and shall set forth the best mode contemplated by the inventor of carrying out his invention.

30. I have been informed that to have an adequate written description, the patent must convey with reasonable clarity to a person skilled in the art that, as of the filing date sought, the named inventor was in possession of the invention.

31. I have also been advised that, to demonstrate possession of the invention, the specification must permit a person with ordinary skill in the art to visualize or recognize the identity of the subject matter purportedly described. Although the specification need not describe the claimed subject matter verbatim to demonstrate possession of the invention, generalized language will not suffice if it does not convey the detailed identity of an invention.

32. I have also been advised that, to have an adequate written description, each limitation of the claimed invention must be disclosed expressly or inherently in the specification. It is not sufficient that the missing claim limitation may be obvious from the specification.

33. To be an enabling disclosure, the specification must adequately disclose to a person skilled in the art how to make or carry out the claimed invention without undue experimentation.

34. The omission of minor details from a patent specification's written description does not cause the specification to fail to meet the enablement requirement. However, when there is no disclosure of any specific starting material or of any of the conditions under which a process can be carried out, undue experimentation is required and there is a failure to meet the enablement requirement that cannot be rectified by asserting that all the disclosure related to the process is within the skill of the art.

D. My Understanding of the Priority Date of a Patent for Prior Art Purposes

35. I understand that for a prior art patent or patent application to be entitled to the priority date of a provisional application to which that patent or patent application claims priority, the specification of the provisional must contain a written description of the invention and the manner and process of making and using it, in such full, clear, concise, and exact terms, to enable a person of ordinary skill in the art to practice the invention claimed in the non-provisional application. To satisfy this requirement, I understand that the disclosure of the provisional application must

provide enabling written description support for both the claims of the patent and the subject matter of the patent relied upon for prior art purposes.

36. My understanding is that, similarly, a patent can claim priority to an earlier filing date of a foreign patent application if the patent expressly claims the benefit of the earlier filing date, and if disclosure of the foreign patent application provides support for the claims of the patent. I also understand, however, that a patent reference cannot claim the benefit of a filing date of a foreign priority document to establish the patent as prior art.

IV. BACKGROUND OF THE TECHNOLOGY

37. The ’809 patent (Ex. 1001) is directed to methods for managing radio resources in a cellular network, which are allocated to user devices such as cell phones, which are referred to as either “Wireless Transmit/Receive Units” (“WTRUs”) or user equipment (“UE”). ’809 patent, 1:32-36; 2:66-3:8.

38. The ’809 patent is directed particularly to radio resources that are used by the UE to transmit data on an **e**nhanced **d**edicated **ch**annel (or “E-DCH”) while the UE operates in a state called “CELL_FACH,” (a cell **f**orward **a**ccess **ch**annel). The Challenged Claims recite a method of triggering the release of these resources after determining that there isn’t any further data to transmit or retransmit. ’809 patent, Abstract, 1:65-67, 2:21-38, 3:27-30, 3:59-4:9. This condition is satisfied by checking the status of two UE buffers: (1) an “E-DCH buffer,” which is a

transmission buffer that stores data that is to be transmitted by the UE over the E-DCH channel ('809 patent, 2:54-55, 5:34-36, Fig. 6); and (2) a "HARQ buffer," which holds a queue of data associated with prior transmissions that may be requested to be retransmitted by the UE if the prior transmission is not successfully received by the base station as part of a **H**ybrid **A**utomatic **R**epeat re**Q**uest (HARQ) procedure that supports error detection and correction ('809 patent, 2:27-38, 5:59-61, 6:46-62, 8:56-64). These steps of the '809 patent's resource trigger release are depicted in exemplary Figure 6 (color-coded, below). As shown, the WTRU checks **(a)** whether the transmission buffer is empty (which the UE indicates to the base station in a "Scheduling Information" message that includes a data entry field relating to the status of the transmit buffer, the **Total E-DCH Buffer Status field, set to zero (i.e., "TEBS=0")**); and **(b)** no data associated with previous transmissions is stored in the HARQ buffer that needs to be retransmitted to the base station as part of the HARQ procedure **("HARQ buffer is empty")**. '809 patent, Fig. 6, 2:27-38, 5:34-61, 6:46-62. If both these conditions are satisfied, the **WTRU releases the E-DCH resources**. *Id.*

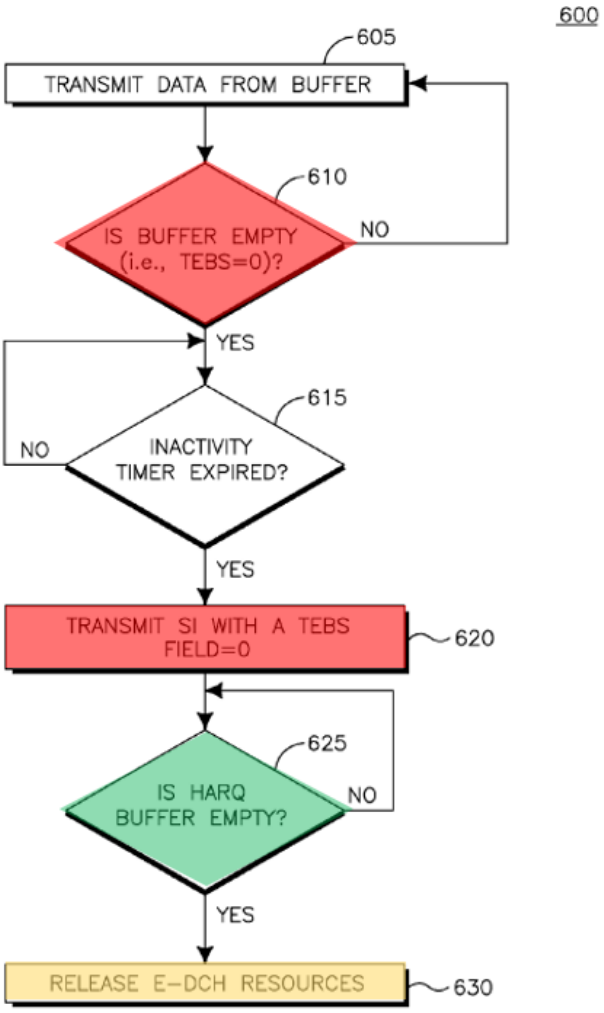

FIG. 6

39. But a person of ordinary skill in the art would have understood that the ’809 patent’s resource release mechanism was already known in the prior art. I set forth multiple examples in this declaration. For example, **Wager** (Ex. 1005) discloses a “UE triggered resource release” mechanism in which a UE initiates the resource release “as quickly as possible after complet[ing] transmission”; this release takes place once the UE “has emptied” its “transmit buffer” (by sending a “Scheduling Information” message to the base station with the TEBS field set to

zero to indicate its "transmit buffer" is empty), and the UE has confirmed that "all HARQ processes have finished," which does not take place until the UE receives an acknowledgement signal (ACK) for HARQ processes from a base station. Wager-Prov., 2:9-10, 2:13-15, 4:8-20, 4:27-28; Wager, ¶¶6-7, 26-28, 31. After emptying its transmit buffer and receiving an ACK, the "UE shall…release the…resources." *Id.* **TS25.321** (Ex. 1009) provides additional detailed teachings of a HARQ procedure in the UE, such as **Wager's** UE, and teaches that a UE will "flush" its HARQ buffer after receiving the aforementioned ACK from a base station of a HARQ process. TS25.321, 99-100. For at least the reasons I discuss in more detail below, a person of ordinary skill in the art would have been motivated to modify **Wager** with **TS25.321's** teachings, thus rendering obvious this claimed process.

40. In forming my opinions, I also analyzed the prosecution history of the '809 patent's parent (the '104 patent (Ex. 1026)), which further supports my opinion that **Wager** at least renders obvious the '809 patent's Challenged Claims for at least the reasons I discuss in this declaration. Indeed, throughout the prosecution history, the Examiner maintained that claims in the '104 patent that recited several similar limitations are anticipated by **Wager**, and allowed the Challenged Claims only due to a priority date issue that is inapplicable here. See Ex. 1027, 12/06/2011 Office Action, pp. 2-6 (PDF pp. 366-370); see also Section VI (The '809 Patent Priority Date).

41. As set forth in greater detail below, combinations of references based on **Lee** also render obvious the Challenged Claims. **Lee** (Ex. 1007) also discloses a resource release mechanism that entails not "unnecessarily wast[ing]" radio resources and "reduc[ing the] amount of wasted radio resources." Lee, Abstract, 8:8-17, 17:1-6. To achieve this, **Lee** discloses a resource release mechanism in which "resources [are] released by [a] UE" once a UE "completes uplink data transmission using the allocated radio resources in an uplink transmission," and thus has "no data left for transmission over an uplink path," meaning the UE has completed all transmissions, and thus does not need to transmit any data or retransmit any data as part of a HARQ procedure or otherwise. Lee, Fig. 6, 8:18-9:22, 10:9-11, 13:12-14, 13:18-23, 15:8-17. **TS25.321** further provides additional teachings regarding the implementation of HARQ in a UE, including that when there is no data left the E-DCH buffer is empty, and when transmissions are successful, the UE flushes its HARQ buffer such that the HARQ buffer is empty. TS25.321, 67-68, 99-100. For at least the reasons I discuss in this expert declaration, a person of ordinary skill in the art would have been motivated to modify **Lee** with **TS25.321's** teachings (and **Nokia's** additional teachings of operating in the claimed CELL_FACH state while using the claimed E-DCH resources), again rendering obvious the Challenged Claims.

42. As set forth in this declaration, **Wager**, **Lee**, **TS25.321**, and **Nokia**, along with **TS25.331** (Ex. 1011) and **Sarkinnen** (Ex. 1010) (which disclose certain additional features recited in the dependent Challenged Claims) render obvious to a person of ordinary skill in the art each of the Challenged Claims.

V. '809 PATENT AND PROSECUTION HISTORY

A. Overview of the '809 Patent

43. The '809 patent purports to disclose methods for releasing radio resources by a cellular device, called a wireless transmit/receive unit ("WTRU") such as a user equipment ("UE"). '809 patent, Abstract, 1:32-36, 2:21-38, 2:66-3:4, 3:59-4:9; *see* Section IV (Background of the Technology). These methods are performed while the WTRU is operating in a **cell f**orward **a**ccess **ch**annel ("CELL_FACH") state and using **e**nhanced **d**edicated **ch**annel ("E-DCH") resource(s) to transmit to an element in the network referred to as a "base station." '809 patent, Abstract, 1:65-67, 2:12-14, 2:66-3:8; 3:59-4:9; *see* Section IV (Background of the Technology).

44. Specifically, the Challenged Claims are directed to a method of triggering the release of E-DCH resources when certain conditions are met that indicate the resources are no longer being utilized by a WTRU. '809 patent, 2:34-38, 5:34-61, 6:46-62. The triggering mechanism is based on the state of fullness of the WTRU's buffers (recited in the independent Challenged Claims) or expiration

of an inactivity timer that tracks the duration of a WTRU's inactivity (recited in certain dependent Challenged Claims). *Id*. Regarding the former, the trigger is based on two WTRU buffers: (1) a transmission buffer, also called a E-DCH buffer, which stores data that the WTRU is to transmit to a base station (*i.e.*, in the "uplink" direction); and (2) a **H**ybrid **A**utomatic **R**epeat re**Q**uest (HARQ) buffer, which stores data associated with prior transmissions that the WTRU may be requested to retransmit as part of a conventional HARQ procedure used for error detection and correction. '809 patent, 5:36-37, 5:39-40; *see* Section IV (Background of the Technology). The status of the E-DCH buffer is indicated in a "scheduling information (SI)" message transmitted by the WTRU to the base station. '809 patent, 2:29, 5:40-45. SI message includes a "Total E-DCH Buffer Status (TEBS)" field, which is set to zero to indicate when the E-DCH buffer is "empty." '809 patent, 5:40-42. The status of a HARQ buffer is indicated by whether all required HARQ transmissions have completed such that there is no data that needs to be transmitted stored in a UE's HARQ buffer. '809 patent, 2:34-38, 5:59-61, 6:56-62. As recited by independent Challenged Claims 1 and 6, the **WTRU releases E-DCH resources** ('809 patent, 4:7-10, 5:34-61, 6:46-62) when two conditions are met: (1) there is no new data left to transmit from its transmission buffer, at which point the WTRU communicates this to the base station by transmitting "scheduling information (SI)" that sets the **"Total E-DCH Buffer Status (TEBS)" field equal**

to zero ('809 patent, 2:29, 5:40-45); and (2) there are no prior transmissions to retransmit from its Hybrid Automatic Repeat reQuest buffer, as indicated by the **HARQ buffer being empty**. '809 patent, 2:34-38, 5:59-61, 6:46-69.

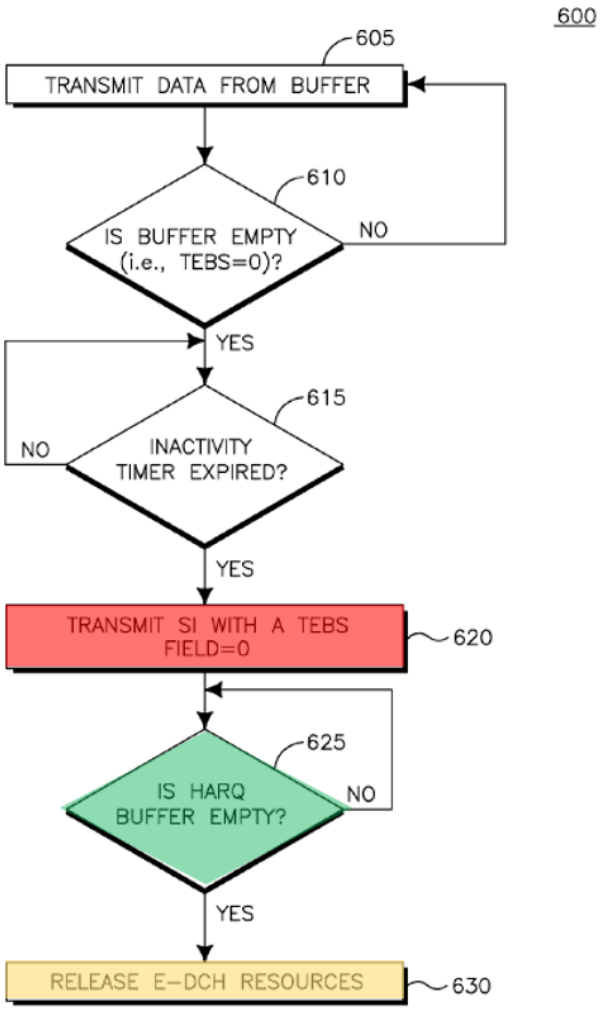

FIG. 6

45. The release trigger may be based on an inactivity timer. After **determining that the WTRU's E-DCH buffer is empty** and, optionally (as recited in certain dependent Challenged Claims), after the **expiration of an inactivity**

timer, **SI with TEBS equal to 0 is transmitted**. ’809 patent, 5:34-61. Upon then also **determining that the WTRU’s HARQ buffer is empty**, the **WTRU releases its E-DCH resource**, as depicted in Fig. 6 (color-coded) below. ’809 patent, 5:34-61. The dependent Challenged Claims (2-3 and 8-9) concern a release mechanism that delays the release until after the WTRU’s inactivity timer expires. *See, e.g.*, ’809 patent, Fig. 6, 5:34-61. Specifically, the WTRU “check[s] if an inactivity timer has expired,” which occurs when the WTRU has “no UL [uplink] or downlink (DL) traffic.” ’809 patent, 5:40-50. If that is the case, the WTRU begins the release process by transmitting the SI, as I discussed above. ’809 patent, Fig. 6, 5:54-61.

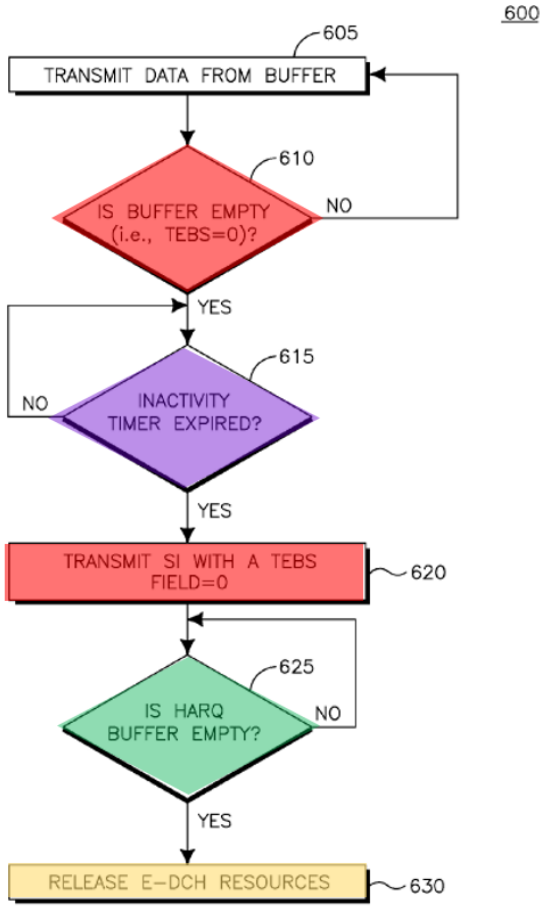

FIG. 6

46. Dependent Challenged Claims 5 and 7 recite completing an E-DCH transmission when "radio link failure" and/or "cell reselection" occurs. '809 patent, 6:28-32, 6:43-45, 7:60-64, 9:61-10:3. A "cell reselection" procedure is, *e.g.*, a procedure in which a UE cellular device such as a cell phone is transferred from one base station to another to ensure that the UE continues to be connected to the cellular network, for example, while the UE moves from one cell coverage area (serviced by one base station) to another cell coverage area (serviced by another base station).

And a radio link failure is, *e.g.*, a failure that results in a UE having a faulty or no radio link (*e.g.*, connection) with its serving base station.

47. And finally, dependent Challenged Claims 4 and 10 recite a method for a WTRU to access an E-DCH resource using a "PRIOR ART" procedure (labeled in Figure 1), called a **R**andom **A**ccess **CH**annel (RACH) preamble procedure. '809 patent, 1:42-45, 2:1-12, 3:62-4:8, Fig. 1. This procedure entails a WTRU **transmitting RACH preambles, receiving a response on an E-DCH acquisition channel (E-AICH) granting the WTRU access to E-DCH resources**, and **using the allocated resource for uplink transmission to the base station**. *Id.*

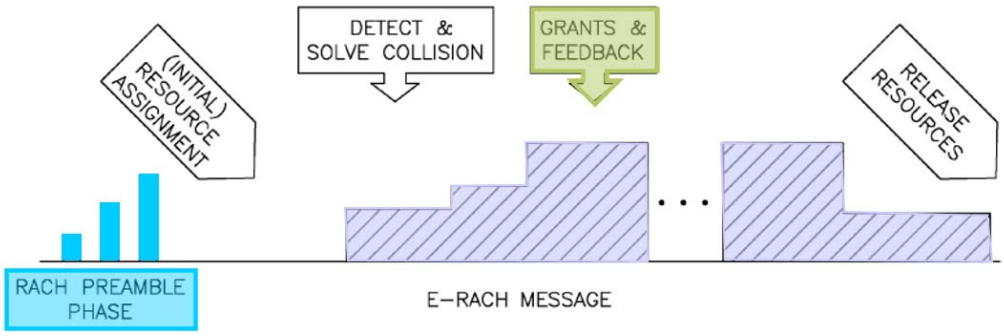

FIG. 1 (PRIOR ART)

B. Prosecution History

48. There was no substantive prosecution of the application leading to the '809 patent. The '809 patent's Challenged Claims were allowed after Applicant filed a terminal disclaimer to overcome a double patenting rejection in view of issued

claims in its parent patent (USP 8,774,104 (Ex. 1026, "'104"). Ex. 1002 at 152-58, 178, 185-91, 365-83. Besides this double patenting rejection, the Examiner issued no other rejections of the '809 patent's Challenged Claims.

49. During prosecution of the parent '104 patent, the Examiner rejected then-pending independent claims 1, 4, 6, and 32 (similar to the '809 patent's Challenged Claims), as anticipated by **Wager**. Ex. 1027, 366-68. After multiple rejections and responses from the Applicant, and several claim amendments, the claims of the '104 patent were ultimately allowed. Ex. 1027, 366-68, 381-88, 537-42, 586-87, 684-86, 703-09, 722, 726.[1] Note that, as issued, the claims of the '104

[1] In the Applicant's October 21, 2013 remarks, the Applicant made the statement that **Wager's** provisional application "does not support all of the subject matter disclosed in the cited **Wager** publication." Ex. 1027, 754. However, the Applicant cited to the Applicant's remarks in its October 12, 2012 supplemental response as explaining the support for this argument. *Id*. That earlier response argued that the claims of the '104 patent were entitled to claim priority to an earlier provisional application, U.S Provisional Patent Application Nos. 60/975,985, filed 9/28/2007 ("'985 Provisional" (Ex.1029)). *See* Ex. 1027, at 560-562. Applicant did not separately make any arguments about **Wager's** entitlement to its own provisional.

patent do not recite claim elements that are recited in the ’809 patent that affect the ’809 patent’s priority date.[2] As a result, as discussed in greater detail below, the

---

As I discuss separately below in Section IX.A.1, **Wager** is entitled to claim priority to the filing date of Wager-Prov.

[2] Claim 1 of the ’104 patent does recite determining “a last hybrid automatic repeat request (HARQ) data transmission.” *See* Ex. 1026, Claim 1. However, this claim language does not recite a HARQ “buffer,” let alone recite that any such “HARQ” buffer is empty. This is a material difference between the claim language of the ’104 patent and the ’809 patent because the ’104 patent’s claim language does not require an “empty” HARQ buffer. For example, “determining a last hybrid automatic repeat request (HARQ) data transmission” recites several circumstances in which the HARQ buffer may not be empty, including (1) determining what was the most recently sent HARQ data transmission (i.e., the last-sent HARQ data transmission); and (2) determining that the next HARQ data transmission to be made is the last (i.e., final) HARQ data transmission to be sent. In each of these circumstances, the HARQ buffer is not required to be empty: for the last/previously-sent HARQ data transmission, the determination is agnostic to whether the HARQ buffer is empty or not, whereas the HARQ buffer should not be empty if a determination is being made that the next HARQ data transmission will be the last/final HARQ data transmission.

Examiner's findings regarding **Wager's** disclosure support my opinion that **Wager** renders obvious the Challenged Claims, but do not have any bearing on my opinion that **Wager** qualifies as prior art to the '809 patent.

VI. THE '809 PATENT PRIORITY DATE

50. I was asked to consider whether the Challenged Claims are entitled to the filing dates of either of the two earliest-filed provisional patent applications to which the '809 patent purports to claim priority—namely, U.S Provisional Patent Application Nos. 60/975,985, filed 9/28/2007 ("'985 Provisional" (Ex.1029)) and 60/982,528, filed 10/25/2007 ("'528 Provisional" (Ex. 1028)). I was not asked to formulate an opinion as to whether the '809 patent is entitled to claim priority to any

---

This understanding is also consistent with the teachings of the '985-Prov. as well, because the '985-Prov. discloses emptying, via "flushing," the HARQ buffers as part of a resource release process, and does not disclose making a separate determination that a HARQ buffer is empty as a precondition to releasing such resources. '985 Prov., ¶¶36-37. As a result, the '104 patent's claims do not recite any claim element requiring that any HARQ buffer is empty. Any arguments that the '985-Prov. supports the concept of a HARQ buffer being empty therefore would be grounded in obviousness, which I have been informed is insufficient to show the written description support requisite to claim priority to the '985-Prov's filing date.

of the later-filed provisional applications to which the ’809 patent purports to claim priority to, and have not formulated any such opinion. I reserve the right to formulate such opinions at a later time if asked to do so.

51. Based upon my review of the ’985 Provisional and the ’528 Provisional, the Challenged Claims are not entitled to claim priority to the filing date of these two provisional applications. Each of these two provisional applications do not provide written description support for at least the following limitation: “releasing the E-DCH resource when…the HARQ buffer is empty.” The ’528 Provisional does not discuss HARQ buffers at all. And though the ’985 Provisional mentions that resource release involves “flushing the HARQ buffers,” there is no discussion of releasing resources ***when*** the HARQ buffer is empty. Ex. 1029, ¶¶37, 39. Rather, the ’985 Provisional discloses that the HARQ buffer is flushed after the release procedure has begun in response to a “WTRU-initiated triggers” for terminating E-RACH communications, such as having “emptied” the E-DCH transmission buffer, having “transmitted all protocol data units (PDUs) which were present when the E-RACH was initiated,” or having a transmission buffer that “passed a certain threshold level.” Ex. 1029, ¶¶24-28. The ’985 Provisional discloses that once a trigger occurs, the WTRU will clear all of its E-RACH resources, which includes “resetting the MAC-es/e” which normally controls E-DCH features, “flushing the HARQ buffers” to remove remaining data, and “stop monitoring the E-RACH

downlink channels" that are used to communicate HARQ information and resource grants between the device and a node. Ex. 1029, ¶37. The '985 Provisional describes a similar release process occurring in response to a Node-B sending a "reconfiguration message" to the WTRU to terminate an E-RACH communication. *See* Ex. 1029, '985 Provisional, ¶39 (after receiving a reconfiguration message the WTRU "releases the resources associated with the E-RACH (resetting the Mac es/e, flushing the soft buffer, stop listening to the downlink E-RACH, etc.)"). Those disclosures from the '985 Provisional at most support that a HARQ buffer is flushed ***after*** the resource release process has begun, and there is nothing to suggest that the release occurs ***when*** the HARQ buffer is already empty.

VII. LEVEL OF ORDINARY SKILL

52. In rendering the opinions set forth in this declaration, I was asked to consider the Challenged Claims of the '809 patent and the prior art cited in this declaration through the eyes of a person of ordinary skill in the art at the time of the alleged invention. I understand determining the ordinary level of skill in a field of art includes looking at multiple factors including: (1) the level of education and practical experience; (2) the types of problems encountered in the field; (3) the teachings of the prior art; and (4) and the sophistication of the technology at the time of the alleged invention. I understand that a person of ordinary skill in the art is not a real individual, rather a hypothetical individual having a certain set of qualities that

embody the aforementioned factors listed. I understand that a person of ordinary skill in the art would also have knowledge from the teachings of the prior art, including the prior art cited in this declaration.

53. With respect to all of the Grounds set forth in this declaration, I have been asked to assume that the ’809 patent is entitled to the priority date of January 4, 2008. Based on the above, it is my opinion that on or before this priority date, a person of ordinary skill in the art as of the claimed priority date of the ’809 patent would have had a bachelor’s degree in electrical and computer engineering, computer science, or the equivalent thereof, and, least two years of experience with networking and wireless communications systems. Additional graduate education could substitute for professional experience, and significant experience in the field could substitute formal education. *See, e.g.*, ’809 patent, 1:25-2:17, 10:4-41.

54. I am qualified to opine concerning what a person of ordinary skill in the art would have known and understood at that time of the alleged invention. Indeed, by January 4, 2008, my level of skill in the art was at least that of a person of ordinary skill, as I have defined above. My analysis and conclusions herein are from the perspective of a person of ordinary skill in the art as of January 4, 2008. Additionally, to the extent that the ’809 Patent is entitled to a different priority date (e.g., if it were not entitled to claim priority to any of its provisional applications),

my opinions herein would remain the same so long as the prior art references that I have identified in this declaration qualify as prior art.

VIII. CLAIM CONSTRUCTION

55. In rendering the opinions set forth in this declaration, I have been instructed that the Challenged Claims of the ’809 patent are to be given their ordinary and customary meaning as understood by one of ordinary skill in the art at the time of the alleged invention. I understand this meaning may shift in light of the ’809 patent’s specification and prosecution history pertaining to it and its patent family. I have followed these principles in the analysis I lay out in this declaration.

56. I understand that there is a pending district court litigation between Petitioner and Pantech (“LGE Litigation”) involving the ’809 patent. As reflected in Ex. 1033, Petitioner and Pantech have agreed that the preambles of Challenged Claims 1 and 6 are limiting in the LGE Litigation, and have not identified any claim construction disputes involving the ’809 patent.

57. I have been instructed to assume that the preambles are limiting. To the extent that any preamble is found to be limiting, the prior art discloses or renders obvious the preamble for the reasons discussed below in Section IX (Grounds of Unpatentability).

IX. GROUNDS OF UNPATENTABILITY

58. In this section, I explain why the teachings from the following references alone or in combination disclose and/or render obvious each of the Challenged Claims under the following grounds (listed below). I have been instructed to assume that each of these references qualifies as prior art. I understand that LGE has retained Dr. Friedhelm Rodermund, an expert on 3GPP proceedings, to provide testimony regarding public accessibility of **TS25.321**, **TS25.331**, and **Nokia**. The table below incorporates his analysis. *See* Declaration of Friedhelm Rodermund in Support of Petition for Inter Partes Review of U.S. Patent No. 9,313,809 ("Rodermund"), a copy of which I understand is included as Exhibit 1004. I have reviewed Dr. Rodermund's declaration and agree with his analysis, which is incorporated into the table below with respect to **TS25.321**, **TS35.331**, and **Nokia**. Rodermund, ¶¶1-141. It is my opinion that Challenged Claims of the '809 patent are unpatentable as explained below. I note that in this discussion, I may focus on the particular language in the specific claims, but it should be understood that my analysis applies to the corresponding elements of all Challenged Claims containing identical or substantially identical language.

Name	US Patent/ Title	Exhibit	Filed	Published/ Issued
Wager	US 2009/0225709	1005	12/05/2008	09/10/2009

Name	US Patent/ Title	Exhibit	Filed	Published/ Issued
TS25.321	TS25.321 v7.5.0	1009	N/A	By 7/17/2007[3]
Lee	WO 2007/078155	1007	01/04/2007	07/12/2007
Nokia	R2-073254	1008	N/A	By 8/24/2007
Sarkkinen	US 2006/0176845	1010	01/05/2006	08/10/2006
TS25.331	TS25.331 v7.5.0	1011	N/A	By 7/31/2007[4]
Chun	US 2006/0251027	1012	05/04/2006	11/09/2006

[3] I understand from Dr. Rodermund's analysis that in addition to publication of TS25.321 by the 3rd Generation Partnership Project (3GPP), the ETSI organization also published a substantively identical version TS 125.321 (Ex. 1082). My analysis with respect to TS25.321 applies equally to ETSI's TS 125.321. Ex. 1082; Rodermund, ¶¶98-102.

[4] I understand from Dr. Rodermund's analysis that in addition to publication of TS25.331 by the 3rd Generation Partnership Project (3GPP), the ETSI organization also published a substantively identical version TS 125.331 (Ex. 1091). My analysis with respect to TS25.331 applies equally to ETSI's TS 125.331. Ex. 1091; Rodermund, ¶¶119-123.

As I explain below, the Challenged Claims are invalid based upon the following prior art grounds:

- **Ground 1:** Challenged Claims 1, 4, 6, 10 of the ’809 patent are rendered obvious by **Wager** in view of **TS25.321**.
- **Ground 2:** Challenged Claims 1, 4, 6, 10 of the ’809 patent are rendered obvious by **Lee** in view of **Nokia** and **TS25.321**.
- **Ground 3:** Challenged Claims 2-3, 5, 7-9 of the ’809 patent are rendered obvious by **Wager** in view of **TS25.321** and **Sarkkinen**.
- **Ground 4:** Challenged Claims 2-3, 5, 7-9 of the ’809 patent are rendered obvious by **Lee** in view of **Nokia**, **TS25.321**, and **Sarkkinen**.
- **Ground 5:** Challenged Claims 5, 7 of the ’809 patent are rendered obvious by **Wager** in view of **TS25.321** and **TS25.331**.
- **Ground 6:** Challenged Claims 5, 7 of the ’809 patent are rendered obvious by **Lee** in view of **Nokia**, **TS25.321**, and **TS25.331**.
- **Grounds 7-12:** Challenged Claims 6-10 of the ’809 patent and rendered obvious by Grounds 1-6 in further view of **Chun**.

59. It is my opinion that the Challenged Claims of the ’809 patent are unpatentable for at least the reasons I have provided below. In my discussion below, I note that I may focus on the particular language in specific claims, but it should be

understood that my analysis applies to the corresponding elements of all Challenged Claims containing identical or substantially identical language.

A. Ground 1: Wager in view of TS25.321 (Claims 1, 4, 6, 10)

1. Wager's Effective Date

60. In forming my opinions, I was asked to consider whether **Wager** is entitled to claim priority to the filing date of Wager-Prov., including by considering whether Wager-Prov. provides written description and enablement support for at least one claim of **Wager**, as well as written description and enablement support for those portions of **Wager** that I rely upon for my opinions. It is my opinion that **Wager** is entitled to the priority date of Wager-Prov.

61. First, it is my opinion that Wager-Prov. provides enabling written description support for at least claim 1 of Wager. In the table below, and having reviewed the intrinsic evidence, I have identified example disclosures from Wager-Prov. that provide such enabling written description support for each element of claim 1 of **Wager**. Moreover, based on the disclosures in the Wager-Prov.**,** including the disclosures identified in the table below, a person of ordinary skill in the art at that time (relative to the Wager-Prov.) would have been able to practice claim 1 of Wager without undue experimentation. By that timeframe, these concepts were well-understood in the field. Note that in preparing this table, it was unnecessary to construe any of the claim terms of **Wager**, including by determining whether or not

the preamble of claim 1 is limiting, because under any reasonable interpretation of the claim, Wager-Prov. provides sufficient enabling written description support.

Wager Claim 1	Wager-Prov.
[1.pre] A method in a User Equipment (UE) of releasing a common Enhanced Dedicated Channel (E-DCH) resource allocated to the UE by a radio network node, the UE being in a CELL_FACH state, further comprising:	**Wager-Prov. discloses a method in a User Equipment (UE) of releasing a common Enhanced Dedicated Channel (E-DCH) resource allocated to the UE by a radio network node, the UE being in a CELL_FACH state.** For example, Wager-Prov. discloses "a method and arrangement that allows a user equipment to release the common E-DCH resources in a fast and reliable manner." Wager-Prov. 1:1-6, 3:3-5, 4:7-20. The "common E-DCH resources" are "temporarily assigned" to a UE in a "CELL_FACH state" by a NodeB until a release is triggered by the UE. *See* Wager-Prov. 1:8-2:2, 4:7-20. ***E.g.*:** • **Fig. 1** 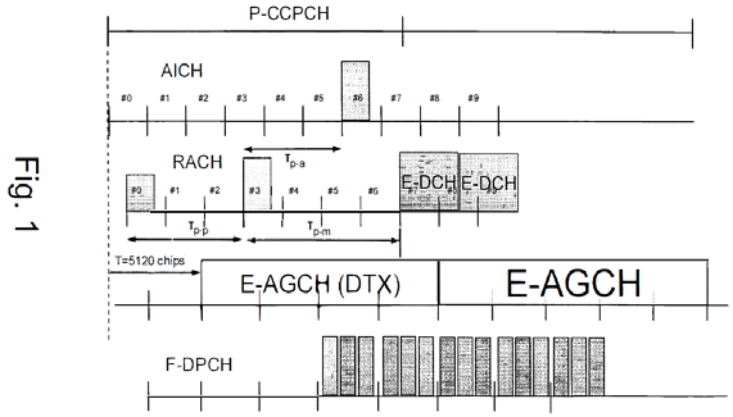 • **1:1-6** ("The present invention relates to a method and arrangement in a telecommunication system, in particular to ***a method and arrangement for a fast and reliable release of common E-DCH resources***.")

Wager Claim 1	Wager-Prov.
	• **1:8-23** ("In 3GPP Rel-8, work is ongoing to improve the uplink performance in CELL_FACH state. CELL_FACH is an RRC state in which the UE is known on cell level (i.e. has a cell id), has a layer 2 connection but no dedicated physical layer resource. Instead, common physical layer resources are shared between users in CELL_FACH state. ***The uplink improvement planned for Rel-8 is the activation also in CELL_FACH of the E-DCH physical channel***, which is normally used as a dedicated physical layer channel in CELL_DCH state, with one separate E-DCH resource allocated per user. This is performed by having ***a pool of E-DCH resources that can be temporarily assigned to a user in CELL_FACH state. These resources are called common E-DCH resources***. E-DCH resources are normally managed by a RNC (Radio Network Controller), but the pool of common E-DCH resources will be managed by NodeB without involving the RNC, in order to speed up the allocation. The common E-DCH configurations are broadcast to UEs in the cell.") • **1:24-2:2** ("The ***procedure to access the common E-DCH channel in CELL FACH*** starts in the same way as Rel 99 RACH transmission, i.e. with preamble power ramping using randomly selected preamble signatures. Having detected the preamble, the NodeB acknowledges reception with an AICH sequence. It also informs the UE which common E DCH resource it has assigned to the UE.") • **3:3-5** ("It is a first object of the present invention to achieve ***a method and arrangement that allows***

Wager Claim 1	Wager-Prov.
	a user equipment to release the common E-DCH resources in a fast and reliable manner.”) • **4:7-20** (“***UE triggered resource release*** Once a UE in CELL_FACH transmitting on a common E-DCH resource has emptied its RLC transmit buffer, it shall include the Scheduling Information (SI) field in the last MAC PDU, indicating Total E-DCH Buffer Status (TEBS) = 0. For users in CELL FACH, the NodeB will interpret this as the UE has finished transmission, and will release the common E-DCH resource, once all HARQ processes have finished. Note that even when the HARQ process carrying the last MAC PDU with the SI field have completed, there may still be previous HARQ processes that have not yet completed. The NodeB shall release the common E-DCH resource, making it available for use by other users, once all HARQ processes have finished or when the reordering timer T1 have expired for the last MAC PDU.”)
[1.a] determining that the common E-DCH resource allocated to the UE should be released; and	**Wager-Prov. discloses determining that the common E-DCH resource allocated to the UE should be released.** For example, Wager-Prov. discloses a method for “user equipment to release the common E-DCH resources.” Wager-Prov. 2:26-35, 4:7-5:4. For a “UE triggered resource release,” the UE determines that resources should be released “once a UE in CELL_FACH transmitting on a common E-DCH resource has emptied its RLC transmit buffer” and “it has received an ACK for all HARQ processes, or reached the maximum number of HARQ transmissions.” Wager 4:7-5:4. ***E.g.*:** • **2:26-3:5** (“One reason for the lack of resources has shown to be that UE s are keeping the assigned common E-DCH resources for a longer time period

Wager Claim 1	Wager-Prov.
	than needed, this due to lack of an reliable and fast release procedure. It is a first object of the present invention to achieve ***a method and arrangement that allows a user equipment to release the common E-DCH resources*** in a fast and reliable manner.”) • **4:7-5:4** (“***UE triggered resource release Once a UE in CELL_FACH transmitting on a common E-DCH resource has emptied its RLC transmit buffer***, ***it shall include the Scheduling Information (SI) field in the last MAC PDU, indicating Total E-DCH Buffer Status (TEBS) = 0.*** For users in CELL FACH, the NodeB will interpret this as the UE has finished transmission, and will release the common E-DCH resource, once all HARQ processes have finished. Note that even when the HARQ process carrying the last MAC PDU with the SI field have completed, there may still be previous HARQ processes that have not yet completed. The NodeB shall release the common E-DCH resource, making it available for use by other users, once all HARQ processes have finished or when the reordering timer T1 have expired for the last MAC PDU. In another embodiment, the E-TFCI or "Happy bit" on the physical layer control channel E-DPCCH is used to indicate release of the common E-DCH resource. These could however be more error prone, and could be used either as the only indication for common E-DCH resource release or in combination with the SI field in the MAC PDU. ***The UE shall not release the common E-DCH resources until it has received an ACK for all HARQ processes, or reached the maximum number of HARQ transmissions***. Once the UE has transmitted the E-DCH resource release indication,

Wager Claim 1	Wager-Prov.
	and new data is received from higher layer to be transmitted, the UE shall start by transmitting preambles to request a new common E-DCH resource.”)
[1.b] signaling to the radio network node release of the common EDCH resource.	**Wager-Prov. discloses signaling to the radio network node release of the common EDCH resource.** For example, Wager-Prov. discloses that “release of the common E-DCH resources is signaled between UE and NodeB.” Wager-Prov. 4:1-20. During a “UE triggered resource release,” the UE signals the release by transmitting “Scheduling Information (SI) … indicating Total E-DCH Buffer Status (TEBS) = 0.” Wager-Prov. 4:1-20. The NodeB will “interpret” this SI signal as “the UE has finished transmission, and will release the common E-DCH resource.” Wager-Prov. 4:1-20. ***E.g.*:** • **4:1-20** (“***The release of the common E-DCH resources is signaled between UE and NodeB using existing signaling fields*** on L2 or Ll. These signaling fields are already in use in CELL_DCH, but their interpretation is changed for users in CELL_FACH. ***UE triggered resource release*** Once ***a UE*** in CELL_FACH transmitting on a common E-DCH resource has emptied its RLC transmit buffer, it ***shall include the Scheduling Information (SI)*** field in the last MAC PDU, ***indicating Total E-DCH Buffer Status (TEBS) = 0***. For users in CELL FACH, ***the NodeB will interpret this as the UE has finished transmission, and will release the common E-DCH resource***, once all HARQ processes have finished. Note that even when the HARQ process carrying the last MAC PDU with the SI field have completed, there may still be previous HARQ processes that have not yet completed. The NodeB shall release the

Wager Claim 1	Wager-Prov.
	common E-DCH resource, making it available for use by other users, once all HARQ processes have finished or when the reordering timer T1 have expired for the last MAC PDU.”)

62. Second, it is my opinion that Wager-Prov. provides enabling written description support for those portions of **Wager** that I rely upon in formulating my opinion that **Wager** in view of TS25.321 (and **Sarkkinen**, TS25.331, and/or **Chun**) renders obvious the Challenged Claims. As set forth below in Section IX.A.4 (Invalidity of Claims 1, 4, 6, 10 Over **Wager** with TS25.321's Teachings), I rely on disclosures both from Wager-Prov. and **Wager** in formulating my opinion. Because Wager-Prov. is incorporated by reference into **Wager**, the disclosures in Wager-Prov. that I rely on are part of **Wager** (and thus constitute portions of **Wager** that are enabled by Wager-Prov.). **Wager**, ¶1. With respect to those disclosures that I rely upon from **Wager**, I have included citations to example portions of Wager-Prov. that provide support for the cited disclosures.

63. Accordingly, as set forth in this section and below in Section IX.A.4 (Invalidity of Claims 1, 4, 6, 10 Over Wager with TS25.321's Teachings), Wager-Prov. provides enabling written description support for both claim 1 of **Wager**, as well those disclosures from **Wager** that render the Challenged Claims invalid as obvious.

2. Wager

64. **Wager**, titled "Managing Uplink Radio Resources in Cellular Radio Communications System," discloses a "UE triggered resource release" scheme that addresses problems of "UEs [] keeping the assigned common E-DCH resources for a longer timer period than needed" by providing a "fast and reliable release of common E-DCH resources," thereby improving "uplink performance" in a UMTS-based system ("3GPP Rel-8"). Wager-Prov., 2:23-3:2, 2:13-15; *see also* **Wager**, ¶45.

65. To achieve a "fast and reliable" resource release, **Wager** teaches that a UE, while operating in a CELL_FACH state," releases its resources once it has "completed transmission[s]" to a base station (e.g., "NodeB") and thus no longer needs its assigned resources for transmission. Wager-Prov., 1:3-8, 2:9-10, 2:13-15, 4:8-5:4; Wager, Abstract, ¶¶4, 6-11, 33, 40, 45, 47. In particular, a UE has "completed transmission[s]" when it has "emptied" its transmission buffer, which **Wager** discloses is an "E-DCH Buffer." Wager-Prov., 4:8-15 (UE sets "Total E-DCH Buffer Status" to 0 when the UE "has emptied its RLC transmit buffer"), Figure 1 ("E-DCH transmission in CELL_FACH state"); Wager, ¶31. Specifically, **Wager** teaches that once the UE has determined that its "E-DCH Buffer" has "emptied," it communicates this to the NodeB by transmitting the Node-B "Scheduling Information (SI)" with a "Total E-DCH Buffer Status" field set to zero

("TEBS=0"). *Id*. Upon receiving the SI, the NodeB "interpret[s] this as the UE has finished transmission," and the NodeB "will release the common E-DCH resource[] once all HARQ processes have finished" so that the resource can be used by "other users" (*i.e.*, other UEs) to carry out transmissions. Wager-Prov., 4:12-20; Wager, ¶36. Specifically, **Wager** states that "there may still be previous HARQ processes that have not yet completed," meaning that certain prior transmissions need to be retransmitted by the UE because the NodeB did not properly receive them. Wager-Prov. 4:12-20; Wager, ¶32. "[O]nce all HARQ processes have finished," meaning that all previous transmissions made by the UE have been successfully received by the NodeB, the UE "receive[s] an ACK" from the NodeB acknowledging that "all HARQ processes" have completed, which causes the UE to "release the common E-DCH resources" that is has been assigned so that they can be made "available for use by other users." Wager-Prov. 4:12-5:4; Wager, ¶¶25, 32-34. By enabling a UE to proactively release the common E-DCH resources once all the transmissions (and HARQ retransmissions) are completed, **Wager's** method enables resources to be released and reassigned "as quickly as possible," and "increases the E-DCH capacity" for devices in CELL_FACH overall." Wager-Prov. 2:13-15, 3:13-16; Wager, Abstract, ¶¶7, 26, 51.

66. For a UE in CELL_FACH to use E-DCH resources to carry out transmissions, a UE is first granted access to the E-DCH resources. To that end,

Wager discloses a process for accessing E-DCH resources using an already existing "procedure" used in "Rel-99" to perform "[Random Access Channel] transmission" ("*i.e*. with preamble power ramping using randomly selected preamble signatures"). Wager-Prov., Fig. 1, 1-24-2:2, 3:24-25, 4:8-10; Wager, Figs. 2-3, ¶¶25-26, 30, 33. A person of ordinary skill in the art would have understood "Rel-99," short for "Release-99," refers to the first release of UMTS. Thus, **Wager** teaches a method for accessing E-DCH resources that builds off the implementation for doing so in UMTS systems that were already in existence. As depicted in Figure 1 below (color-coded), this procedure entails the following request and response between the UE and base station: (1) the UE transmits "**randomly selected preamble signatures**" to the NodeB requesting access to the E-DCH channel, and (2) the NodeB "acknowledges reception" of the preambles by transmitting back to the UE "**an AICH sequence**" to "inform[]" the UE of the "**E-DCH resource" the UE has been assigned to make uplink (UL) transmissions**. *Id*.

Fig. 1

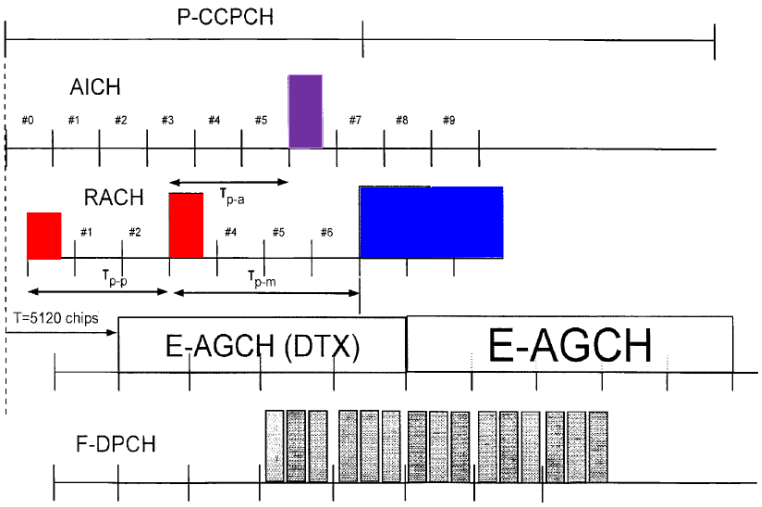

67. Additionally, **Wager** teaches that certain "error cases," such as those that commonly arise due "signaling errors or UEs moving out of coverage," may interfere with the prompt release of resources. Wager-Prov, 5:6-8; Wager, Fig. 4, ¶¶25, 35-37. For example, such error cases may cause the NodeB to not properly receive the UE's signals (*e.g.*, transmission of SI with TEBS=0) that triggers resource release, or the UE to not properly receive the NodeB's acknowledgement of the UE's resource release signals such that the resources assigned to the UE may not be promptly released. To avoid unnecessary delay, **Wager** teaches that the "NodeB can also use a release timer to release the common E-DCH resource" to detect uplink inactivity and prompt the release of resources that otherwise would've been delayed. *Id*; Wager, Fig. 4. This release timer is "started when the common E-DCH resource is assigned to a UE" and "stopped" once "UL transmission has been detected." Wager-Prov., 5:8-16; Wager, ¶37. In other words, **Wager's** timer

is used, *e.g.*, to confirm that the UE and NodeB truly have no further transmissions to carry out (rather than their communications being temporarily halted due "error cases," such as "signaling errors" that could be corrected during that buffer period). Wager-Prov, 5:6-8; Wager, ¶¶25, 35-37. And if no activity occurs over some predetermined period of time, the NodeB's timer determines that the resources assigned to the UE can be released.

3. TS25.321; Motivation to Modify Wager with TS25.321's Teachings

68. As I discussed above in Section IX.A.2 (Wager), **Wager** teaches a "UE triggered resource release" method for a UMTS system that entails releasing E-DCH resources when "all HARQ processes" have been completed and an "ACK" has been received by the UE for all HARQ processes, but leaves it to a person of ordinary skill in the art to determine how the HARQ processes are managed by the UE. **TS25.321** discloses detailed teachings for efficiently managing resources used for HARQ processes implemented in a UE.

69. **TS25.321** is a technical specification related to UMTS radio technology that was made publicly available by the Third Generation Partnership Project (3GPP), which is a Standard Setting Organization (SSO) in the cellular communications space and responsible for drafting, approving, and maintaining UMTS specifications. TS25.321, 2, 7-8. The scope of **TS25.321** is to specify the

Medium **A**ccess ***C***ontrol (MAC) protocol, the protocol for sending transmissions between devices in a UMTS network, such as a user equipment ("UE") and its serving base station ("[serving] Node-B"). *Id.* Specifically, **TS25.321** sets forth a protocol for implementing a HARQ procedure, which entails a UE sending retransmissions of prior transmissions that were "unsucessful[ly] rece[ived]" by a base station. TS25.321, 99 (Section 11.8.1.1.1). In this regard, **TS25.321** teaches that each UE has a "HARQ entity" that manages a "number of parallel HARQ processes," and "each HARQ process is associated with a physical buffer (HARQ buffer)" that stores data associated with prior transmissions to aid in error checking and control. *Id.* More specifically, the HARQ buffer allows the base station to correct for errors in the UE's prior transmissions (e.g., if the UE's transmission was lost or erroneously received by the base station) by temporarily storing copies of prior data transmissions so that the UE can easily retrieve that data if requested for retransmission by the base station. TS25.321, 99 (Section 11.8.1.1.1). **TS25.321** teaches that "if an ACK is received from the [Radio Link Set ("RLS")] containing the serving cell," indicating that a prior transmission was "successful[ly] rece[ived]," the data associated with this successful transmission would not be requested to be transmitted again, and the UE shall "flush the HARQ buffer," which empties the HARQ buffer. TS25.321, 12, 99-100 (Sections 11.8.1.1.1, 11.8.1.1.2). **TS25.321** also discloses a procedure for how the HARQ entity handles subsequent

transmissions "if the buffer of the HARQ process corresponding to the next [transmission time interval] is empty." TS25.231, 99 (Section 11.8.1.1.1).

70. **Wager** and **TS25.321** are in the same field as the '809 patent, which includes wireless communication, and are reasonably pertinent to the alleged problems identified in the '809 patent (*e.g.*, implementing an efficient release of radio resources in a wireless communications system). '809 patent, 1:25-33, 3:59-4:15, 5:34-61, 6:21-27, 6:46-63; Wager-Prov., 1:3-6, 2:19-21; TS25.321, 2, 99-100 (Sections 11.8.1.1.1, 11.8.1.1.2); Wager, Abstract, ¶¶7, 45-46. For example, **Wager** is directed to a "method and arrangement in a telecommunication system, in particular to a method and arrangement for a fast and reliable release of common E-DCH resources" that entails "signaling the release of common E-DCH resources between UE and NodeB" when "all HARQ processes have finished." Wager-Prov., 1:3-6, 2:19-21, 4:14-15; Wager, Abstract, ¶¶7, 45-46; *compare with* '809 patent, 1:25-33, 4:7-13 ("The present application is related to wireless communication" in which "WTRU 210 may use these E-DCH resources for UL transmission until it receives a trigger, at which point the WTRU 210 will release the resources 415. . . . [T]he trigger may be…based on signaling from the RNC or the Node-B 220."), 5:34-36 ("…a method to release E-DCH resources [is] based on the status of a WTRU's 210 queue or 35 buffer."), 6:56-59 ("…the WTRU 210 is releasing the resources once the transmission of data in the HARQ buffers is completed."). And **TS25.321**,

which pertains to technical specifications for a "UMTS" wireless network, provides more details regarding the implementation of a HARQ process in a UE: *e.g.*, "[a] number of parallel HARQ processes are used in the UE to support" the "one HARQ entity at the UE," and "[e]ach HARQ process is associated with a physical buffer" that is "flush[ed]." TS25.321, 2, 99-100 (Sections 11.8.1.1.1, 11.8.1.1.2). As I discuss below, a person of ordinary skill in the art would have been motivated to modify **Wager** with the above teachings of implementing HARQ processes in a UE from **TS25.321**, yielding a system in which a UE employs a HARQ buffer and determines when it is empty, which occurs after it's been flushed, once an ACK signal is received.

71. First, a person of ordinary skill in the art would have been motivated to modify **Wager's** HARQ-based evolved UMTS system ("3GPP Rel-8") with existing, compatible 3GPP protocols, such as UMTS protocols (Release 7) defined by **TS25.321**. TS25.321, cover page ("Release 7"), 2 ("UMTS" listed as one of two "Keywords"), 7, 99-100. Indeed, as I discussed in Section IX.A.2 (Wager), **Wager** teaches reusing existing UMTS protocols, such as the "RACH transmission" protocol employed in "Rel-99" (Release 99), to grant access to a UE to use E-DCH resources, indicating that it would have been desirable and functionally compatible to use UMTS Release 99 signaling mechanisms in **Wager's** system for evolved UMTS Release 8. Accordingly, a person of ordinary skill in the art would have been

motivated to look to **TS25.321's** teachings, which are directed toward UMTS (Release 7), based on **Wager's** explicit reference to using such UMTS teachings with its disclosures. TS25.321, cover page; Wager-Prov., 1:8-2:2, Wager, ¶¶3 ("Evolved UMTS Terrestrial Radio Access (E-UTRA) is the air interface of 3GPP's Long Term Evolution (LTE) upgrade path for mobile networks."; "***E-UTRA is the successor to High Speed Downlink Packet Access (HSDPA) and High Speed Uplink Packet Access (HSUPA) technologies specified in 3GPP releases 5, 6 and 7.***"), 4, 25, 36 (emphasis added). Indeed, 3GPP, the organization that published TS25.321 and other technical specifications, aims to promote systems that are "backwards and forward compatible where possible, to ensure that the operation of user equipment is uninterrupted"—which would have further motivated a person of ordinary skill in the art to look to 3GPP UMTS technical specifications, including TS25.321. *See* Ex. 1035 (https://www.3gpp.org/about-us/introducing-3gpp) ("The major focus for all 3GPP Releases is to make the system backwards and forwards compatible where possible, to ensure that the operation of user equipment is uninterrupted.") (last accessed: July 12, 2023).

72. Second, a person of ordinary skill in the art would have been motivated to modify **Wager** with **TS25.321's** teachings of using a physical HARQ buffer to advantageously provide for error checking functionality by storing previously transmitted data until it has been successfully received and ACK'ed by the base

station (TS25.321, 99-100 (Sections 11.8.1.1.1, 11.8.1.1.2)) to **Wager** in order to improve accuracy and speed of **Wager's** communication system. For example, as I discussed above in Section IX.A.2 (Wager), a HARQ buffer improves accuracy of communications because it helps the base station correct errors by retransmitting data transmissions that were originally incorrectly received. Additionally, the local implementation of a HARQ buffer at the UE improves communication speeds and reduces latency because it allows the UE to more quickly retrieve previous data for retransmissions if requested by the base station.

73. Third, a person of ordinary skill in the art would have been motivated to modify **Wager's** HARQ-based signaling scheme according to **TS25.321's** teachings of emptying the HARQ buffer after the UE receives an "ACK" from the base station acknowledging successful reception of the UE's prior transmissions because doing so would yield numerous benefits such as: (1) improving reliability of **Wager's** resource release mechanisms, (2) improving overall data integrity in the network, (3) improving UE memory utilization, and (4) lowering UE production cost. Wager-Prov., 4:7-20, 4:27-5:4; TS25.321, 99-100 (Sections 11.8.1.1.1, 11.8.1.1.2); Wager, Abstract, ¶¶7-11, 27, 31, 45-46, 51. **First**, releasing resources *after* an ACK is received for HARQ processes improves the reliability of **Wager**'s resource releasing system by ensuring that the UE has resources to use to send the required HARQ-related retransmissions. Otherwise, the UE would not have the

resources necessary to retransmit data that was unsuccessfully received by the base station, and the base station would not be able to correct errors in those transmissions, resulting in inaccurate and unreliable communications. **Second,** a person of ordinary skill in the art would have understood that flushing the HARQ buffer improves data integrity by preventing old data from being combined with new data. *See, e.g.,* Seidel (Ex. 1016), 16:12-14 ("flushing the buffer region" will "ensure[] that when reusing the buffer region a new data packet is not combined with the 'old' content—i.e. a data packet and its related retransmissions received previously—of this buffer region"); Lindskog (Ex. 1015), 20:9-11 ("flush[ing] … HARQ processes" would "minimize the risk of combining incorrect (or correct) data" associated with earlier transmissions with "with incorrect (or correct) data" associated with later transmissions"). **Third,** a person of ordinary skill in the art would have understood that flushing HARQ buffer of unnecessary data would improve memory utilization, as well as reduce production costs associated with maintaining a larger memory buffer. *See, e.g.*, Sidi (Ex. 1017), ¶8 ("utiliz[ing] memory in an intelligent and flexible manner" would lead to having "more memory" for other non-HARQ processes, "permit the design of UEs having smaller buffer memories, which may lead to lower production costs and/or reduced UE [] power consumption").

74. Additionally, a person of ordinary skill in the art would have found it obvious to release E-DCH resources when a HARQ buffer is empty (after it has been flushed) because they would have understood there to be only a finite number of ways to time the release with respect to flushing the HARQ buffer once an ACK is received from the Node-B. For example, the release can be triggered before the HARQ buffer is flushed (but after the ACK is received), simultaneously with the flushing of the HARQ buffer, or after the flushing of the HARQ buffer. Knowing these limited possibilities, a person of ordinary skill in the art it would have found it obvious to at least try each of these options—thereby rendering obvious each option. Moreover, upon trying each option a POSITA would have been motivated to time the release of resources to occur *after* the HARQ buffer is emptied (after it has been flushed) because **TS25.321** teaches a UE empties its HARQ buffer upon successful reception (by the base station) of a retransmission sent (by the UE) using the resource, and a person of ordinary skill in the art would have appreciated the need to release a resource once all transmissions are completed so that the resources could be more effectively utilized by other UEs in the network, but not before as to allow the UE to complete sending HARQ retransmissions. TS25.321, 99-100 (Sections 11.8.1.1.1, 11.8.1.1.2).

75. A person of ordinary skill in the art would have had a reasonable expectation of success modifying **Wager** with **TS25.321's** teachings because doing

so would have been straightforward for at least the reasons that **TS25.321** provides fulsome implementation details necessary for standardizing UMTS Release 7 system protocols, aligned with the 3GPP's overall mission of "provid[ing] a complete system description for mobile telecommunications," and that these implementation details are functionally compatible with **Wager's** UMTS Release 8 system (Wager-Prov., 1:8-2:2; Wager, ¶¶3-5, 48). *See* Ex. 1036 (https://www.3gpp.org/about-3gpp) (last accessed: July 12, 2023); Ex. 1035 (https://www.3gpp.org/about-us/introducing-3gpp) ("The major focus for all 3GPP Releases is to make the system backwards and forwards compatible where possible, to ensure that the operation of user equipment is uninterrupted.") (last accessed: July 12, 2023). Indeed, **Wager**, itself, discloses reusing UMTS protocols for its system. For example, **Wager** discloses that "[t]he procedure to access the common E-DCH channel in CELL_FACH starts in the same way as Rel-99 RACH transmission," where Release 99 refers to the UMTS standard. Wager-Prov., 1:24-25; Wager, ¶¶3-4, 25-26, 48. Thus, a person of ordinary skill in the art would have understood that it would have been desirable and functionally compatible to apply existing UMTS signaling mechanisms, as appropriate, such as those set forth in **TS25.321**, in implementing **Wager's** UMTS system.

4. Invalidity of Claims 1, 4, 6, 10 Over Wager in view of TS25.321

76. As set forth in my analysis below, **Wager** in view of **TS25.321** renders obvious Challenged Claims 1, 4, 6, and 10. **Wager-Prov.** is incorporated by reference into **Wager** (Wager, ¶1) and I have been instructed to treat it as part of **Wager's** disclosure. In addition to Sections IX.A.2 (Wager) and IX.A.3 (TS25.321; Motivation to Modify Wager with TS25.321's Teachings), I provide the following example disclosures (and bulleted excerpts) that disclose and/or render obvious this subset of the Challenged Claims.

(a) Element [1.pre]

77. Element [1.pre] recites "**A method performed by a wireless transmit/receive unit (WTRU) to communicate with a base station using an enhanced dedicated channel (E-DCH) resource while in a cell forward access channel (CELL_FACH) state, the method comprising.**" This element is met by **Wager**.

78. **Wager discloses a method performed by a wireless transmit/receive unit (WTRU)** (*e.g.*, "UE") **to communicate with a base station** (e.g., "NodeB") **using an enhanced dedicated channel (E-DCH) resource while in a cell forward access channel (CELL_FACH) state** (e.g., UE uses "common E-DCH resources" when "in [a] CELL_FACH" state to transmit to the "NodeB").

79. **Wager** discloses a "method…in a telecommunication system" that includes two devices that are in communication: (1) a "UE"; and (2) a "NodeB." Wager-Prov., 1:3-6, 2:19-21; Wager, ¶¶7-8, 42. This UE discloses the claimed WTRU. Indeed, the '809 explicitly teaches that the claimed "wireless transmit/receive unit (WTRU)" "includes but is not limited to a user equipment (UE)." '809 patent, 2:66-3:4. **Wager's** method is designed to "improve the uplink performance" for the specific case in which a UE sends uplink transmissions when operating in a "CELL_FACH state." Wager-Prov., 1:8-16; Wager, ¶¶4-5. Because these transmissions are made in the "uplink" direction, a person of ordinary skill in the art would have understood that these transmissions constitute communications from a UE to the "NodeB" base station taught in **Wager**. *Id.* To improve uplink performance, **Wager** discloses "activati[ng]" the "E-DCH physical channel" such that the UE in CELL_FACH is permitted to transmit data using dedicated resources on the E-DCH channel. *Id*. In order for a UE in CELL_FACH to have access to the E-DCH channel, **Wager** discloses "temporarily assign[ing]" the UEs "E-DCH resources" from a "pool of E-DCH resources" and informing the "UEs in the cell" of these assignments. Wager-Prov., 1:12-23; Wager, ¶¶5-6. As color-coded in Figure 1 above, the **"UE" then uses its assigned "common E-DCH resource[s]" to make uplink transmissions to the NodeB**. *See, e.g.*, Wager-Prov., Fig. 1, 1:24-

2:2, 2:19-21, 3:8-13, 3:24-4:5, 4:9-12, 4:17-20, 5:8-9, 5:12-16, 5:17-19; Wager, ¶¶4-5, 7-8, 27, 42, 44.

80. *See, e.g.,* **Wager** (emphasis added):

- **Wager-Prov., Fig. 1**

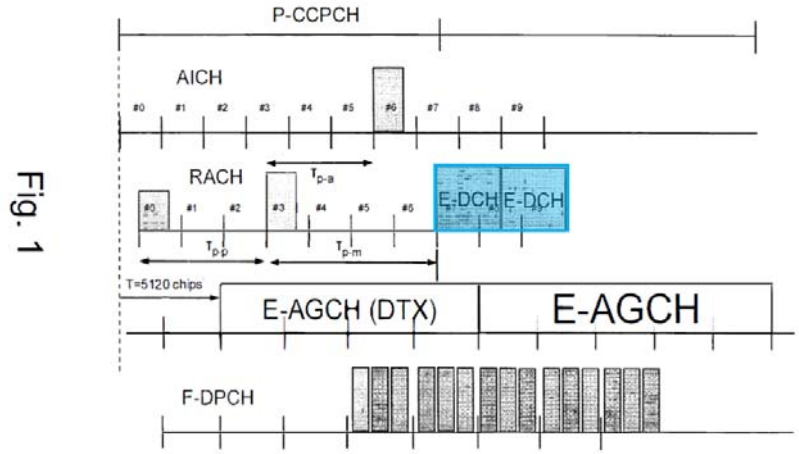

- **Wager-Prov., 1:8-23** ("In 3GPP Rel-8, work is ongoing to improve the uplink performance in CELL_FACH state. CELL_FACH is an RRC state in which the UE is known on cell level (i.e. has a cell id), has a layer 2 connection but no dedicated physical layer resource. Instead, common physical layer resources are shared between users in CELL_FACH state. The uplink improvement planned for Rel-8 is the ***activation also in CELL_FACH of the E-DCH physical channel***, which is normally used as a dedicated physical layer channel in CELL_DCH state, with one separate E-DCH resource allocated per user. This is performed by ***having a pool of E-DCH resources that can be temporarily assigned to a user in CELL_FACH state. These resources are called common E-DCH resources***. E-DCH resources are normally managed by a RNC (Radio Network Controller), but the pool of common E-DCH resources will be managed by NodeB without involving the RNC, in order to speed up the allocation. ***The common E-DCH configurations are broadcast to UEs in the cell.***")

- **Wager-Prov., 3:24-4:5** ("Figure 1 A diagram over *common E-DCH transmission in CELL_FACH state*[.] *The release of the common E-DCH resources is signaled between UE and NodeB* using existing signaling fields

on L2 or L1. These signaling fields are already in use in CELL-DCH, but their interpretation is changed for users in CELL_FACH.")

- **Wager-Prov., 4:9-12** ("Once ***UE in CELL FACH transmitting on a common E-DCH resource*** has emptied its RLC transmit buffer, it shall include the Scheduling Information (SI) field in the ***last MAC PDU***, indicating Total E-DCH Buffer Status (TEBS)= 0. ***For users in CELL_FACH, the NodeB*** will interpret this as the UE has finished transmission…")

- **Wager-Prov., 5:8-9** ("For example, the release timer can be started when ***the common E-DCH resource is assigned to a UE***.")

- **Wager-Prov., 5:17-19** ("The NodeB may also have the option to stop ***a UE from transmitting on a common E-DCH resource*** by sending a grant on E-AGCH with the primary E-RNTI, indicating INACTIVE on all HARQ processes.")

- **Wager, Fig. 1**

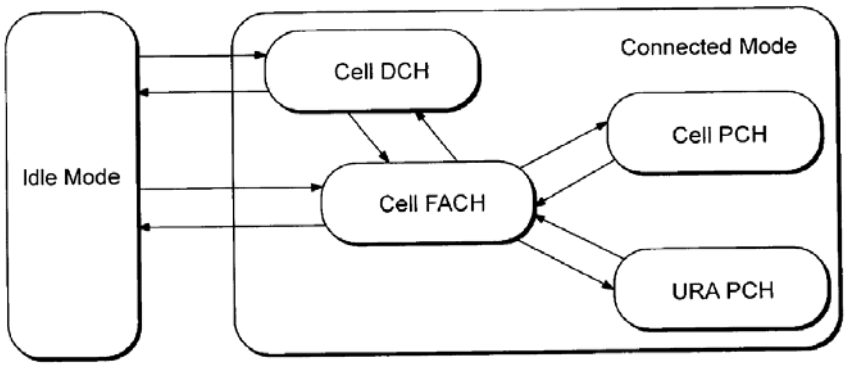

Figure 1

- **Wager, Figs. 5A-B**

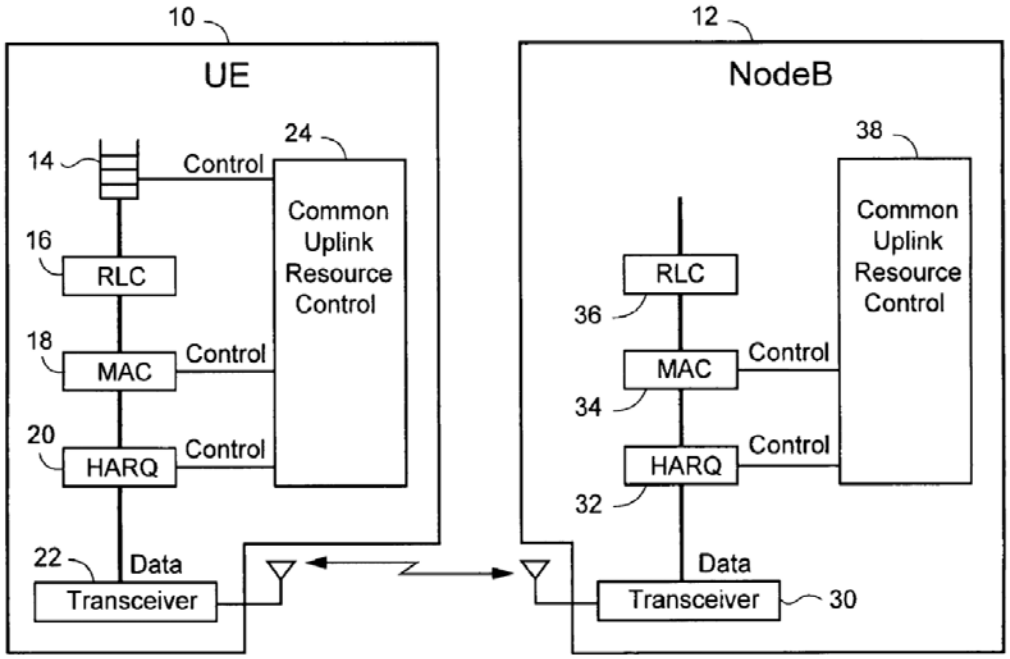

Figure 5A Figure 5B

- **Wager, ¶4** (“***In 3GPP Release-8, work is ongoing to improve the uplink performance in what is called the CELL FACH state.*** At the radio resource control (RRC) level, two basic operation modes of a mobile radio terminal. Sometimes called a user equipment (UE), are idle mode and connected mode as shown in FIG.1. The connected mode is divided into service states, which define what kind of physical radio channels a UE is using. FIG. 1 also shows the main RRC service states in the connected mode and the transitions between states and between modes. In the CELL_FACH state, no dedicated physical channel is allocated to the UE, but the random access and forward access common channels (RACH and FACH respectively) are used instead. The UE is known on cell level (i.e., it has a cellid), has a protocol layer 2 connection (including media access control (MAC) and radio link control (RLC) protocol layers), but does not have dedicated physical (PHY) layer 1 radio resources. Instead, common physical layer radio resources are shared between mobile terminals in the CELL_FACH state for transmitting both signaling messages and small amounts of userplane data to UE's in the CELL FACH state.”)

- **Wager, ¶5** (***"An uplink improvement planned for future cellular radio systems is activation in the CELL_FACH state of an uplink enhanced-dedicated channel (E-DCH) physical channel*** established with HSUPA. The E-DCH is normally used as a dedicated physical layer channel in CELL_DCH state (shown in FIG. 1) with one separate E-DCH resource allocated per UE. This can be performed by using a pool of E-DCH resources that can be temporarily assigned to a UE in the CELL FACH state. Such a pool of E-DCH resources is termed "common E-DCH resources." The E-DCH resources may be managed by a Radio Network Controller (RNC) in 3G UMTS type systems, but the pool of common E-DCH resources may be managed by the radio base station, sometimes referred to as a NodeB, to speed up the allocation of radio resources by not having to involve an RNC or other management node in the allocation procedure.")

- **Wager, ¶7** ("The technology in this application provides ***a method and apparatus for efficiently using E-DCH resources.*** A UE can release common E-DCH resources very quickly after a completed transmission. In addition or alternatively, a base station may release common E-DCH configurations from the network side to free up common E-DCH resources for use by other UES. Various signaling schemes for quickly and effectively releasing common E-DCH resources between a UE and a base station are also provided. ***For example, existing signaling fields already in use in a CELL DCH service state may be given a different meaning for UES in a CELL FACH service state so that common E-DCH resources are quickly and effectively released.*** Alternatively, a new message or a new field in an existing message may be used.")

- **Wager, ¶8** ("In one example embodiment, ***a UE in a CELL FACH state releases an E-DCH resource allocated to the UE***. When the UE determines that the common E-DCH resource allocated to the UE should be released, it signals to the base station release of the common E-DCH resource on existing protocol layer 1 or protocol layer 2 message fields already in use in a CELL DCH state for other purposes. In one example scenario, the common E-DCH resource is released when the UE detects that its transmit buffer is empty. ***The UE may signal the release to the base station*** by including a Scheduling Information (SI) field in a last Media Access Control (MAC) Packet Data Unit (PDU) stored in the transmit buffer which is sent by the UE using the common E-DCH resource. If the transmit buffer is an E-DCH buffer, the SI field indicates a total E-DCH buffer status of Zero. The UE can signal the release

of the common E-DCH resource to the base station by setting an E-DCH-Transport Format Combination Identifier (E-TFCI) or a happy bit on a physical layer control channel to indicate release of the common E-DCH resource.")

- **Wager, ¶27** ("The technology in this application solves this and other problems by either the UE or the base station or both nodes detecting a condition that results in the UE stopping use of and releasing a common uplink radio resource so that the common uplink radio resource can by used by other UEs. For purposes of description only, the common E-DCH resource is used as a non-limiting example of Such a common uplink radio resource. ***UEs that are using the common uplink resource are typically in a state similar to the CELL FACH service state discussed above***, but other states where the UE is using a common uplink radio resource like the E-DCH are included.")

- **Wager, ¶42** ("FIG. 5A is non-limiting function block diagram o***f a UE 10 for using and managing a common E-DCH or other uplink radio resource assuming the common E-DCH or other uplink radio resource is allocated to the UE***. The UE 10 includes a transmission buffer 14 with packets or other data units to be sent to the radio network via the NodeB base station 12 shown in FIG. 5B. These packets are sent to a radio link controller (RLC) 16 which performs various radio link control layer functions such as retransmission and segmentation. The RLC 16 sends RLC packets to a media access controller (MAC) 18 which performs various MAC layer functions such as logical channel multiplexing, priority handling and Transport Format Combination (TFC) selection. The MAC generates MAC packet data units (PDUs) that are processed by an HARQ controller 20 shown separately though it is part of the MAC protocol. The HARQ controller 20 establishes a corresponding HARQ process for each MAC PDU transmitted and sends the MAC PDUs to a radio transceiver 22 for transmission via an antenna over the radio interface to the base station 12.")

- **Wager, ¶44** ("FIG. 5B is non-limiting function block diagram of a NodeB base station 12 for controlling a common E-DCH resource assumed to have been allocated to the UE 10 shown in FIG. 5A. ***The base station 12 receives control signaling and data (baseband information) from the UE 10*** over the radio interface via an antenna and one or more transceivers 30. The baseband information is processed in an HARQ controller 32 which detects successfully received PDUs and retires their corresponding HARQ processes. For incomplete HARQ processes, the HARQ controller 32 requests

retransmission of the corresponding PDUs. The HARQ controller 32 sends the successfully received PDUs to a MAC controller 34 which performs reordering, reassembly, and logical channel de-multiplexing. The RLC controller 36 performs retransmission Support and re-segmentation. A common uplink radio resource controller 38 controls the HARQ controller 32 and MAC controller 34 to detect whether to release the common E-DCH resource allocated to the UE 10. For error cases, like signaling errors or UES moving out of coverage, the uplink radio resource controller 38 can use a release timer to release the common E-DCH resource. The uplink radio resource controller 38 can stop ***a UE from transmitting on a common E-DCH resource*** by sending a grant on the E-AGCH with the primary E-RNTI indicating INACTIVE on all HARQ processes.")

- *See also* **Wager-Prov.**, 1:3-6, 1:24-2:2, 2:3-8, 2:19-21, 3:8-13, 4:17-20, 5:12-16.

(b) Element [1.a]

81. Element [1.a] recites **"determining if a E-DCH buffer is empty."** This element is met by **Wager**.

82. **Wager discloses determining if a E-DCH buffer is empty** (*e.g.*, setting "Total E-DCH Buffer Status (TEBS) = 0" "[o]nce a UE…has emptied its RLC transmit buffer" and thus has determined its RLC transmit buffer is empty)**.**

83. **Wager** further discloses that "[o]nce a UE in CELL_FACH transmitting on a common E-DCH resource has emptied its RLC transmit buffer," the UE "shall include the Scheduling Information (SI) field in the last MAC [Medium Access Control] PDU [Protocol Data Unit], indicating Total E-DCH Buffer Status (TEBS) = 0." Wager-Prov., 4:9-15; Wager, ¶31. In other words, the UE sets the "E-DCH Buffer" status to 0 to reflect its determination that the RLC

transmit buffer is empty, which indicates that the RLC transmit buffer that is "emptied" is an E-DCH buffer. Wager-Prov., 1:3-22, 3:6-13, 4:7-20; Wager, ¶¶31, 41, 43, 45-46.

84. More specifically, "RLC" stands for **R**adio **L**ink **C**ontrol, which is a layer 2 radio link protocol used to transmit communication signals between a UE and NodeB on the "E-DCH physical channel." Wager-Prov., 1:8-23; Wager, ¶8. As such, a UE's "RLC transmit buffer" is a E-DCH buffer because it is used to transmit on a "E-DCH physical channel" using a E-DCH resource. Wager-Prov., 1:3-6, 1:8-23, 3:6-13, 4:9-20; Wager, Figs. 3, 4, 5A-B, 6, ¶¶8, 31, 33, 41, 43, 45-46.

85. *See, e.g.,* **Wager** (emphasis added):

- **Wager-Prov., 4:7-20** ("*UE triggered resource release*

  Once a UE in CELL_FACH transmitting on a common E-DCH resource has emptied its RLC transmit buffer, it shall include the Scheduling Information (SI) field in the last MAC PDU, indicating Total E-DCH Buffer Status (TEBS) = 0. For users in CELL FACH, the NodeB will interpret this as the UE has finished transmission, and will release the common E-DCH resource, once all HARQ processes have finished. Note that even when the HARQ process carrying the last MAC PDU with the SI field have completed, there may still be previous HARQ processes that have not yet completed. The NodeB shall release the common E-DCH resource, making it available for use by other users, once all HARQ processes have finished or when the reordering timer T1 have expired for the last MAC PDU.")

- **Wager, Fig. 3**

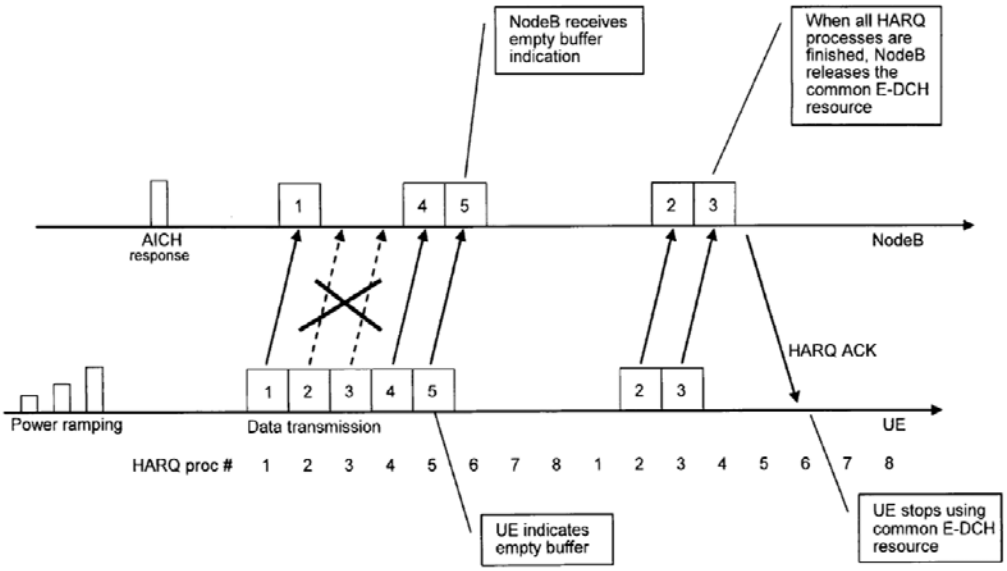

Figure 3

- **Wager, Fig. 4**

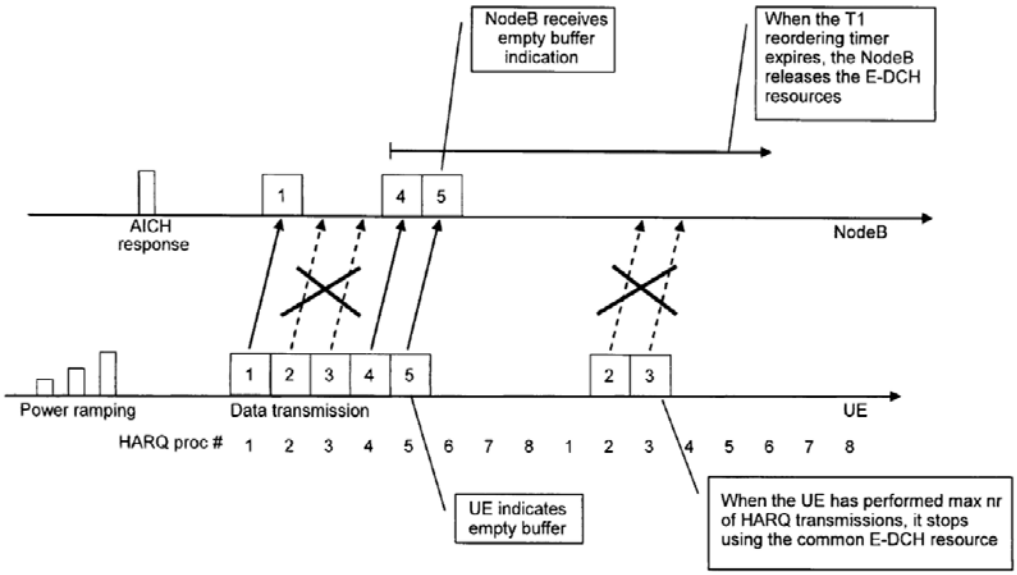

Figure 4

- **Wager, Figs. 5A-B**

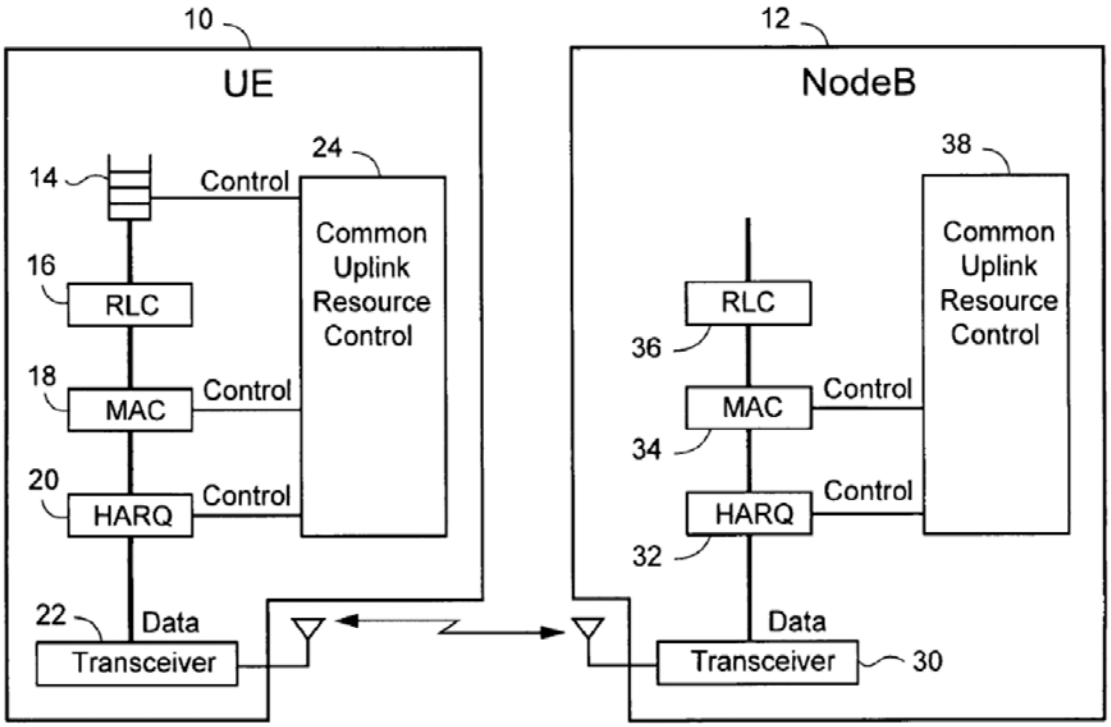

Figure 5A Figure 5B

- **Wager, Fig. 6**

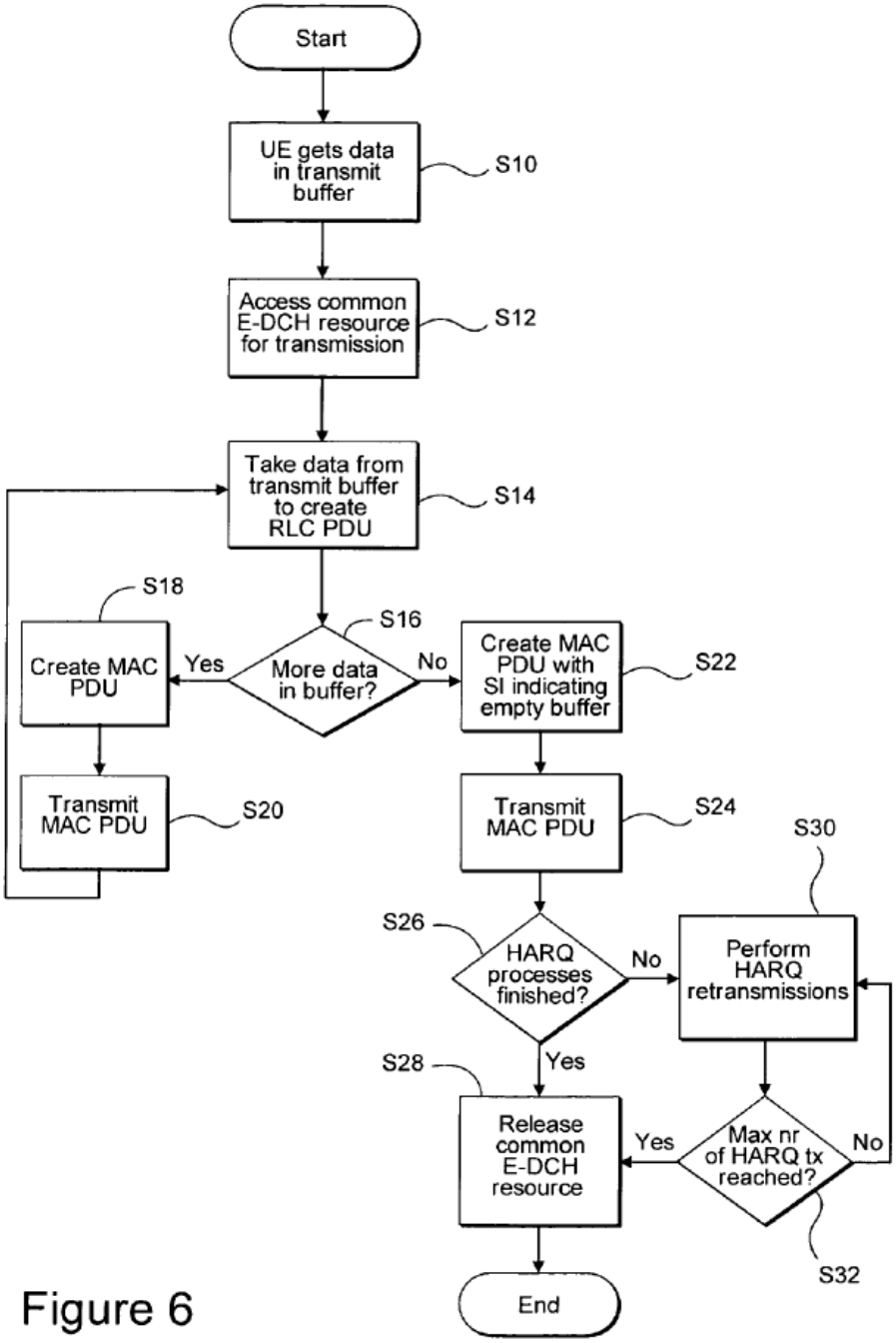

Figure 6

- **Wager, ¶8** ("In one example embodiment, a UE in a CELL FACH state releases an E-DCH resource allocated to the UE. ***When the UE determines that the common E-DCH resource allocated to the UE should be released, it signals to the base station release of the common E-DCH resource on***

existing protocol layer 1 or protocol layer 2 message fields already in use in a CELL DCH state for other purposes. In one example scenario, the common E-DCH resource is released when the UE detects that its transmit buffer is empty. The UE may signal the release to the base station by including a Scheduling Information (SI) field in a last Media Access Control (MAC) Packet Data Unit (PDU) stored in the transmit buffer which is sent by the UE using the common E-DCH resource. If the transmit buffer is an E-DCH buffer, the SI field indicates a total E-DCH buffer status of Zero. The UE can signal the release of the common E-DCH resource to the base station by setting an E-DCH-Transport Format Combination Identifier (E-TFCI) or a happy bit on a physical layer control channel to indicate release of the common E-DCH resource.")

- **Wager, ¶31** ("In accordance with one non-limiting example embodiment, a UE in CELL FACH state triggers release of the common E-DCH resource when the UE has emptied its Radio Link Protocol (RLC) transmit buffer. The UE includes an indicator in the already existing Scheduling Information (SI) field in the ***last Media Access Control (MAC) Packet Data Unit (PDU) transmitted from the RLC buffer indicating a transmit buffer status=0. The SI field is part of an existing message already used for the E-DCH. In particular, the Total E-DCH Buffer Status (TEBS), which is already used to request scheduling for E-DCH, can be set to 0 to indicate an empty buffer.*** This informs the base station that the UE is releasing the common E-DCH resource. For UEs in CELL FACH state, the base station interprets TEBS=0 in the SI field of the last MAC PDU as a signal that the UE is finished transmitting on the common E-DCH resource. In this way, both the UE and the base station promptly release the common E-DCH resource. An added benefit is achieved if already-existing signaling fields can be used to communicate this information as in this non-limiting example. But the indication may be communicated using a new message field or a new message altogether.")

- **Wager, ¶33** ("FIG.3 is a diagram showing a non-limiting example context for reliably and efficiently ending a UE's use of common E-DCH resource. The UE is in a CELL FACH service state (described above) and performs the power ramping procedure on the RACH sending a request for the common E-DCH until an AICH response from the base station (NodeB) is received. If a positive acquisition indicator corresponding to the selected signature is detected on the AICH, the UE starts transmitting data uplink frames 1-5, e.g.,

packet data units (PDUs) 1-5, with the common E-DCH resource using multiple HARQ processes. Here, five HARQ processes are running, one for each transmitted uplink PDUs 1-5. The base station satisfactorily receives PDUs 1, 4, and 5 and so ends HARQ processes 1, 4, and 5. ***In addition, the UE includes an "empty buffer indication in the last PDU 5 to indicate to the base station that the UE does not have any immediate data to send on the common E-DCH.*** As a result, the quicker the base station can release the common E-DCH resource being used by this UE, the sooner other UEs with immediate data to send via the common E-DCH resource can be serviced. In one example embodiment, as soon as the UE sends the empty buffer indication, the UE may release the common E-DCH resource.")

- **Wager, ¶41** ("In summary***, when the UE determines that a common E-DCH resource is to be released, e.g., the UE's transmit buffer is empty, the UE signals to radio base station the release of the common E-DCH resource.*** In response, the base station releases the corresponding common E-DCH resource which then can be used for another user. Alternatively or in addition, the base station determines that a common E-DCH resource is to be released and sends a suitable "stop and release" command to the UE. A release timer is started when a common E-DCH resource is assigned to a UE. If uplink transmission is detected before the timer expires, the timer is stopped and preferably reset. If not, the common E-DCH resource is released by the base station and the UE. Preferably, existing message fields can be used for any signaling between the UE and base station related to releasing the common E-DCH resource.")

- **Wager, ¶43** ("A common uplink resource controller 24, (e.g., the uplink resource may be the common E-DCH resource), can ***monitor the RLC transmit buffer 14, and if it detects no more data packets in the buffer 14, i.e., an empty buffer***, it instructs the MAC controller 18 to insert an empty buffer indicator in the last MAC PDU for this UE to be transmitted. The MAC controller 18 may insert the indicator into an existing control field of the MAC PDU, or there may be a dedicated field for the empty buffer indicator. Preferably, the empty buffer indicator is included in an already existing field Such as fields that have been established for control messages in another service state like the DCH state. The non-limiting example given above included the SI field of the last MAC PDU. The common uplink resource controller 24 also may employ one or more timers to determine whether a time

period for using the common E-DCH resource has expired, and if so, to stop sending data for this UE using the common E-DCH resource.")

- **Wager, ¶45** ("FIG. 6 is a flowchart illustrating non-limiting example steps that may be implemented in a UE, such as the non-limiting example UE shown in FIG. 5A, for reliably and efficiently managing common E-DCH resources. Initially, the UE receives data in a transmit buffer such as the buffer 14 shown in FIG. 5A (steps S10). The UE sends a message on the RACH to the base station requesting access to a common E-DCH resource for uplink transmission (step S12). The RLC controller 16 then takes data from its transmit buffer to create RLC PDUs (step S14). A decision is made in step S16 whether there is any more data in the RLC buffer 14. If so, the MAC controller 18 creates a MAC_PDU from the RLC_PDU (step S18). The MAC_PDU is then transmitted over the radio interface of the UE's transceiver (step S20) and control returns to step S14.")

- **Wager, ¶46** ("If there is no more data in the UE's transmit buffer 14, the MAC controller 18 creates a MAC PDU that includes an indicator indicating that the mobile's transmit buffer is empty (step S22). The MAC controller 18 then provides that last MAC PDU to the transceiver 22 for transmission over the radio interface (step S24). A decision is made in the UE in step S26 whether all of the HARQ processes for this UE uplink transmission have been completed (step S26). If they are, the UE releases the common E-DCH resource (step S28). If the HARQ processes are not finished, the HARQ controller 32 in the base station performs the necessary HARQ retransmissions for the still pending HARQ processes (step S30). A decision is made in step S32 whether a maximum number of HARQ (re)transmissions has been reached. If not, HARQ (re)transmissions are continued in step 30. But if the maximum number has been reached, the common E-DCH resource is released (step S28).")

- *See also* **Wager-Prov., 1:3-23, 3:6-13, 4:2-5.**

(c) Element [1.b]

86. Element [1.b] recites **"transmitting to the base station scheduling information (SI), wherein the SI includes a total E-DCH buffer status (TEBS)**

equal to zero when the E-DCH buffer is determined to be empty." This element is met by **Wager**.

87. **Wager discloses transmitting to the base station scheduling information (SI), wherein the SI includes a total E-DCH buffer status (TEBS) equal to zero when the E-DCH buffer is determined to be empty** (*e.g.*, transmitting a "(SI) field" "indicating … (TEBS) = 0" when the E-DCH buffer is determined to be empty (*see* [1.a])**.**

88. **Wager** further discloses that "[o]nce a UE in CELL_FACH transmitting on a common E-DCH resource has emptied its RLC transmit buffer," which I discussed in connection with element [1.a] above is a E-DCH buffer (*see* [1.a]), the UE "shall. . . [in] the Scheduling Information (SI) field in the last MAC PDU" "indicat[e] Total E-DCH Buffer Status (TEBS) = 0." Wager-Prov., 4:9-12; Wager, ¶31. The UE transmits this SI to the base station. *Id.* Thus, **Wager** discloses that when the UE determines that its E-DCH buffer is empty, it sets TEBS=0 in the SI that it transmits to the NodeB in a MAC PDU. *See* [1.a]; Wager-Prov., 4:9-12; Wager, ¶31.

89. *See, e.g.*, **Wager** (emphasis added):

- **Wager-Prov.**, **4:7-20** ("UE triggered resource release

  Once a UE in CELL_FACH transmitting on a common E-DCH resource has emptied its RLC transmit buffer, it shall include the Scheduling Information (SI) field in the last MAC PDU, indicating Total E-DCH

Buffer Status (TEBS) = 0. For users in CELL FACH, the NodeB will interpret this as the UE has finished transmission, and will release the common E-DCH resource, once all HARQ processes have finished. Note that even when the HARQ process carrying the last MAC PDU with the SI field have completed, there may still be previous HARQ processes that have not yet completed. The NodeB shall release the common E-DCH resource, making it available for use by other users, once all HARQ processes have finished or when the reordering timer T1 have expired for the last MAC PDU.”")

- **Wager, Fig. 3**

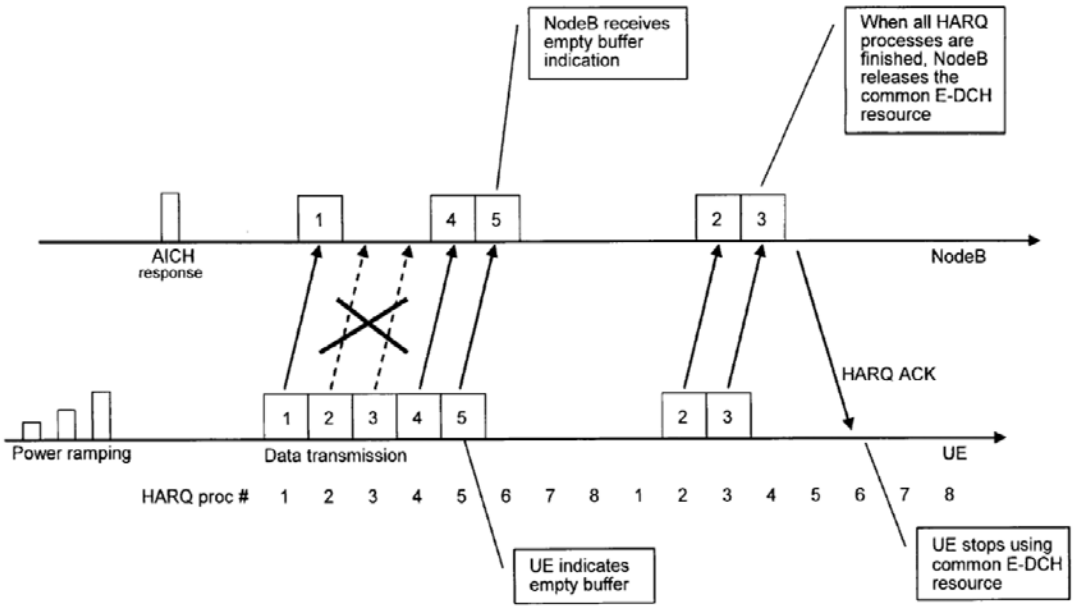

Figure 3

- **Wager, Fig. 4**

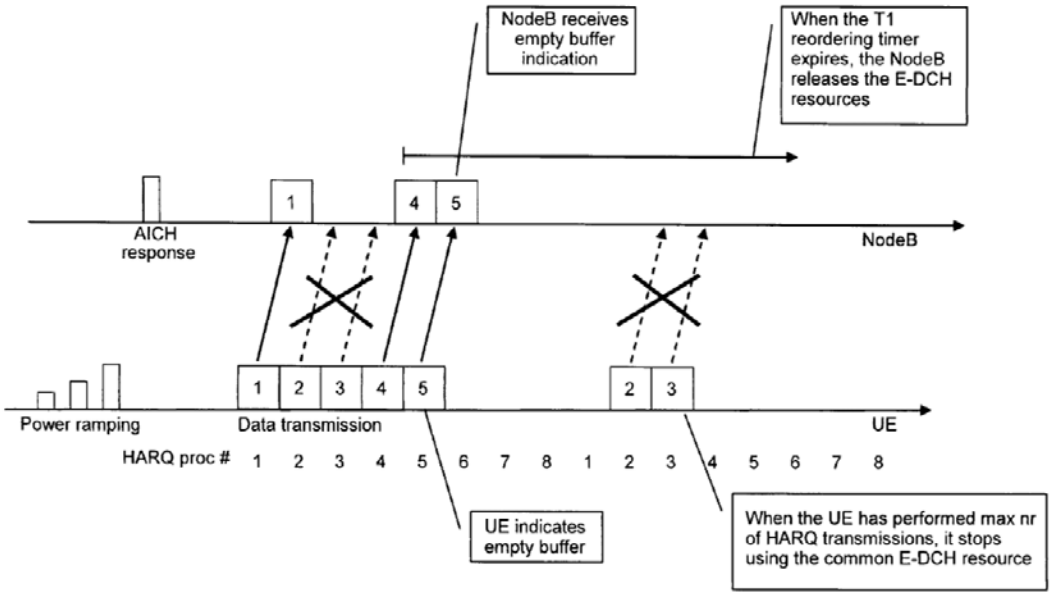

Figure 4

- **Wager, Fig. 6**

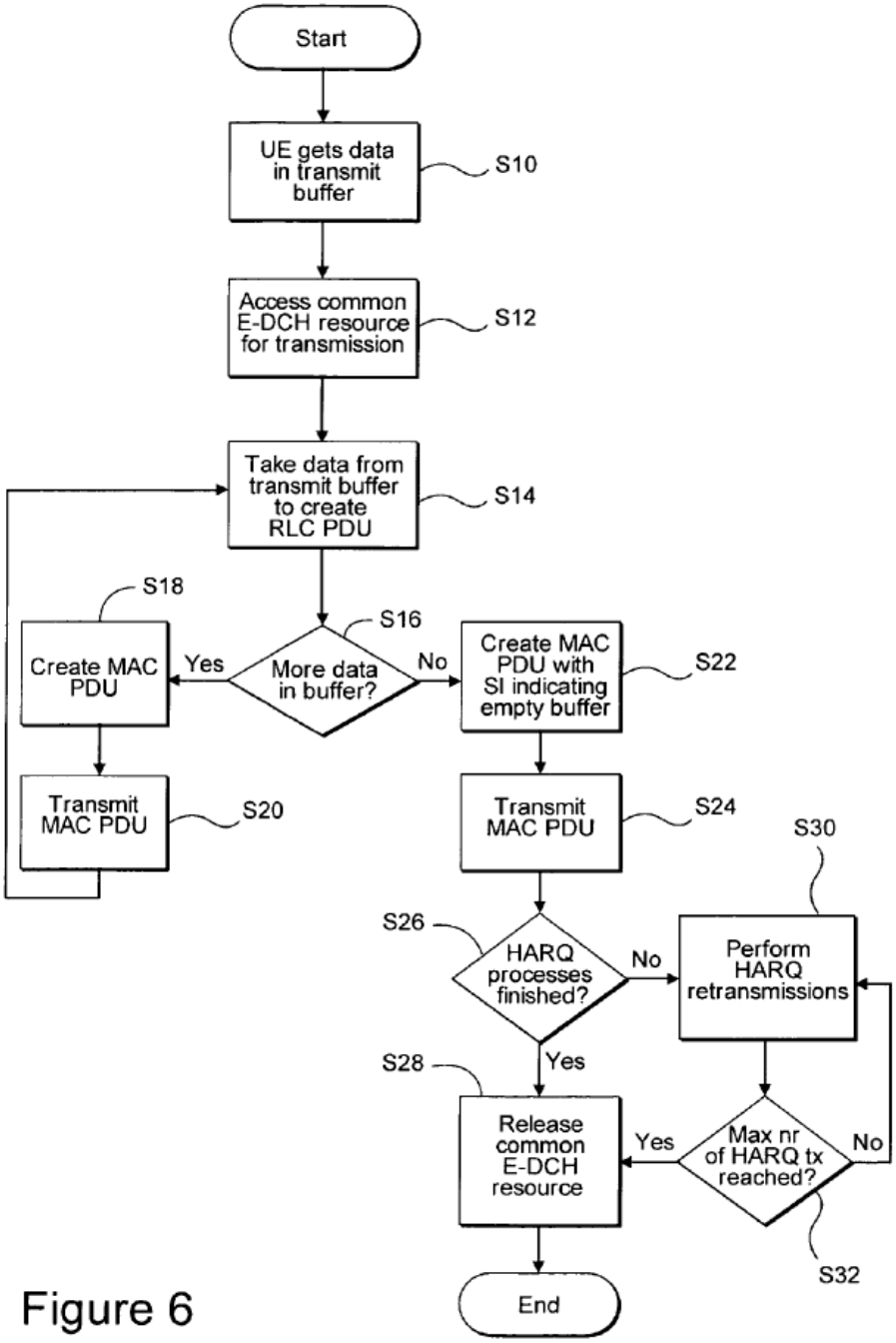

Figure 6

- **Wager, ¶8** ("In one example embodiment, a UE in a CELL FACH state releases an E-DCH resource allocated to the UE. ***When the UE determines that the common E-DCH resource allocated to the UE should be released, it signals to the base station release of the common E-DCH resource on***

existing protocol layer 1 or protocol layer 2 message fields already in use in a CELL DCH state for other purposes. In one example scenario, the common E-DCH resource is released when the UE detects that its transmit buffer is empty. The UE may signal the release to the base station by including a Scheduling Information (SI) field in a last Media Access Control (MAC) Packet Data Unit (PDU) stored in the transmit buffer which is sent by the UE using the common E-DCH resource. If the transmit buffer is an E-DCH buffer, the SI field indicates a total E-DCH buffer status of Zero. The UE can signal the release of the common E-DCH resource to the base station by setting an E-DCH-Transport Format Combination Identifier (E-TFCI) or a happy bit on a physical layer control channel to indicate release of the common E-DCH resource.")

- **Wager, ¶31** ("In accordance with one non-limiting example embodiment, a UE in CELL FACH state triggers release of the common E-DCH resource when the UE has emptied its Radio Link Protocol (RLC) transmit buffer. The UE includes an indicator in the already existing Scheduling Information (SI) field in the ***last Media Access Control (MAC) Packet Data Unit (PDU) transmitted from the RLC buffer indicating a transmit buffer status=0. The SI field is part of an existing message already used for the E-DCH. In particular, the Total E-DCH Buffer Status (TEBS), which is already used to request scheduling for E-DCH, can be set to 0 to indicate an empty buffer.*** This informs the base station that the UE is releasing the common E-DCH resource. For UEs in CELL FACH state, the base station interprets TEBS=0 in the SI field of the last MAC PDU as a signal that the UE is finished transmitting on the common E-DCH resource. In this way, both the UE and the base station promptly release the common E-DCH resource. An added benefit is achieved if already-existing signaling fields can be used to communicate this information as in this non-limiting example. But the indication may be communicated using a new message field or a new message altogether.")

- **Wager, ¶33** ("FIG.3 is a diagram showing a non-limiting example context for reliably and efficiently ending a UE's use of common E-DCH resource. The UE is in a CELL FACH service state (described above) and performs the power ramping procedure on the RACH sending a request for the common E-DCH until an AICH response from the base station (NodeB) is received. If a positive acquisition indicator corresponding to the selected signature is detected on the AICH, the UE starts transmitting data uplink frames 1-5, e.g.,

packet data units (PDUs) 1-5, with the common E-DCH resource using multiple HARQ processes. Here, five HARQ processes are running, one for each transmitted uplink PDUs 1-5. The base station satisfactorily receives PDUs 1, 4, and 5 and so ends HARQ processes 1, 4, and 5. ***In addition, the UE includes an "empty buffer indication in the last PDU 5 to indicate to the base station that the UE does not have any immediate data to send on the common E-DCH.*** As a result, the quicker the base station can release the common E-DCH resource being used by this UE, the sooner other UEs with immediate data to send via the common E-DCH resource can be serviced. In one example embodiment, as soon as the UE sends the empty buffer indication, the UE may release the common E-DCH resource.")

- **Wager, ¶42** ("FIG. 5A is non-limiting function block diagram o***f a UE 10 for using and managing a common E-DCH or other uplink radio resource assuming the common E-DCH or other uplink radio resource is allocated to the UE***. The UE 10 includes a transmission buffer 14 with packets or other data units to be sent to the radio network via the NodeB base station 12 shown in FIG. 5B. These packets are sent to a radio link controller (RLC) 16 which performs various radio linkcontrol layer functions such as retransmission and segmentation. The RLC 16 sends RLC packets to a media access controller (MAC) 18 which performs various MAC layer functions such as logical channel multiplexing, priority handling and Transport Format Combination (TFC) selection. The MAC generates MAC packet data units (PDUs) that are processed by an HARQ controller 20 shown separately though it is part of the MAC protocol. The HARQ controller 20 establishes a corresponding HARQ process for each MAC PDU transmitted and sends the MAC PDUs to a radio transceiver 22 for transmission via an antenna over the radio interface to the base station 12.")

- **Wager, ¶45** ("FIG. 6 is a flowchart illustrating non-limiting example steps that may be implemented in a UE. Such as the non-limiting example UE shown in FIG.5A, for reliably and efficiently managing common E-DCH resources. Initially, the UE receives data in a transmit buffer such as the buffer 14 shown in FIG. 5A (steps S10). The UE sends a message on the RACH to the base station requesting access to a common E-DCH resource for uplink transmission (step S12). The RLC controller 16 then takes data from its transmit buffer to create RLC PDUs (step S14). ***A decision is made in step S16 whether there is any more data in the RLC buffer 14. If so, the MAC controller 18 creates a MAC PDU from the RLC PDU (step S18). The MAC***

PDU is then transmitted over the radio interface of the UE's transceiver (step S20) and control returns to step S14.")

- **Wager, ¶46** ("***If there is no more data in the UE's transmit buffer 14, the MAC controller 18 creates a MAC PDU that includes an indicator indicating that the mobile's transmit buffer is empty (step S22). The MAC controller 18 then provides that last MAC PDU to the transceiver 22 for transmission over the radio interface (step S24).*** A decision is made in the UE in step S26 whether all of the HARQ processes for this UE uplink transmission have been completed (step S26). If they are, the UE releases the common E-DCH resource (step S28). If the HARQ processes are not finished, the HARQ controller 32 in the base station performs the necessary HARQ retransmissions for the still pending HARQ processes (step S30). A decision is made in step S32 whether a maximum number of HARQ (re)transmissions has been reached. If not, HARQ (re)transmissions are continued in step 30. But if the maximum number has been reached, the common E-DCH resource is released (step S28).")

- **Wager, ¶50** ("FIG. 9 illustrates a non-limiting example protocol architecture for supporting efficient and reliable use and release of the common E-DCH resource by UEs. ***The UE uses the MAC-i protocol to transmit the Scheduling Information (SI) field indicating an empty buffer to the NodeB***, thus implicitly indicating that it will release the common E-DCH resource after successful completion of all HARQ processes. The NodeB uses the physical control channel E-AGCH, terminated in the PHY layer, to explicitly indicate the release of the common E-DCH resources to the UE.")

- **Wager, ¶51** ("The technology in this application provides many different ways to efficiently use and release a common uplink radio resource like the common E-DCH resource. Several example embodiments use existing message fields and timers to accomplish these ends. Several example embodiments also enhance the reliability of the release by providing an opportunity for all HARQ processes to complete even though a UE buffer empty indicator is signaled and/or by using one or more timers to ensure that release is not held up for too long. Also, ***the fact that the scheduling information is included in the MAC-i header means that it is covered by the HARQ transmissions, thus making the indication very reliable.*** The added possibility for the base station to explicitly release common E-DCH resources by using the E-AGCH provides a good mechanism for managing common E-

DCH resources.") For instance, in case of overload, the base station can use the explicit release mechanism to quickly free up resources.")

90. See my discussion for elements [1.pre], [1.a].

(d) Element [1.c]

91. Element [1.c] recites "**determining if a hybrid automatic repeat request (HARQ) buffer is empty.**" This element is met by **Wager** in view of **TS25.321**.

92. **Wager discloses determining if all HARQ processes have finished** (*e.g.*, determining if "all HARQ processes have finished" by receiving "an ACK for all HARQ processes").

93. **TS25.321 discloses determining if a hybrid automatic repeat request (HARQ) buffer is empty** (*e.g.*, UE "flush[es] the HARQ buffer").

94. **Wager** discloses a "UE triggered resource release" scheme that employs "HARQ" signaling to release resources that were assigned to a UE. *See, e.g.*, Wager-Prov., 4:7-5:4; Wager, ¶36. **Wager** discloses that once a UE receives an "ACK for all HARQ processes" from the NodeB, it determines that "all HARQ processes have finished" and releases its assigned common E-DCH resource. Wager-Prov., 4:12-19, 4:27-28; Wager, ¶36. **Wager's** ACK refers to an acknowledgement signal that indicates to a recipient device (in this case, the UE) that the transmitting device (in this case, the NodeB) has acknowledged something.

Specifically, this ACK in **Wager** indicates the NodeB's acknowledgement that the HARQ processes have finished. Wager-Prov., 4:12-19, 4:27-28; Wager, ¶36.

95. As I mentioned above, **Wager** discloses that the UE receives an ACK from the NodeB after all HARQ processes are completed, but **Wager** leaves to a person of ordinary skill in the art the details regarding how the HARQ processes are managed in the UE. Wager-Prov., 4:7-20, 4:27-5:4. **TS25.321** provides implementation details for HARQ processes at the UE, including how to carry out the HARQ processes using a HARQ buffer. TS25.321, 99-100.

96. **TS25.321** discloses that a UE has a HARQ buffer that it uses to implement HARQ processes. TS25.321, 99-100. Specifically, **TS25.321** teaches that a UE has a "HARQ entity" that implements HARQ processes, where "[e]ach HARQ process … [is] associated with a physical buffer (HARQ buffer)." *Id.* **TS25.321** teaches that "if an ACK is received from the RLS containing the serving cell," the UE will "flush the HARQ buffer." TS25.231, 100. A person of ordinary skill in the art would have understood this disclosure to teach that the UE flushes its HARQ buffer if the UE receives an ACK from the RLS (*i.e.*, radio link set), which contains the UE's serving cell. As discussed in Section IX.A.2 (Wager), a person of ordinary skill in the art would have understood that the UE's flushing of the HARQ buffer empties the HARQ buffer, and therefore not only renders obvious but affirmatively discloses that the UE determines that the HARQ buffer is empty

because a UE flushing its HARQ buffer would determine that the buffer is empty when completing the flushing process, either as part of the flushing process itself or through a routine checking the status of the buffer. *See also* TS25.321, 99, 100. And at minimum, it would have been obvious for a person of ordinary skill in the art to determine that the HARQ is empty once the UE flushes its HARQ buffer so that the UE can keep an accurate record of the status of the HARQ buffer for further transmissions. Indeed, as **TS25.321** explicitly discloses, the UE determines "if the buffer of the HARQ process corresponding to the next TTI [transmission time interval] is empty" in order to process additional subsequent transmissions. TS25.321, 99. For example, **TS25.321** discloses that "if the buffer of the HARQ process corresponding to the next TTI is empty," the UE "notif[ies] the E-TFC [evolved-transport format combination] selection entity that the next TTI is available for a new transmission" and obtains the necessary transmission-related information to "instruct the HARQ process corresponding to this TTI to trigger transmission of this new payload." TS25.321, 99. Otherwise, if the HARQ buffer is determined *not* to be empty, the UE "instruct[s] the HARQ process to generate a re-transmission." TS25.321, 99.

97. Furthermore, a person of ordinary skill in the art would have further understood that **TS25.321's** teachings of a "HARQ process" that entail "flush[ing] the HARQ buffer" when "an ACK is received" (TS25.321, 100) would have

indicated that the HARQ process is finished (and thus that the base station successfully received the UE's prior data transmissions). Moreover, a person of ordinary skill in the art would have understood **TS25.321's** teachings as indicating that, because the UE has made a determination that it no longer needs to transmit additional messages as part of the HARQ process and flushed the buffer, the UE has made the determination that the HARQ buffer is empty (and thus available for a new HARQ process). Accordingly, a person of ordinary skill in the art would have understood that **TS25.321** discloses and renders obvious a UE determining whether its HARQ buffer is empty once the UE's HARQ processes have finished.

98. As discussed in Section IX.A.3 (TS25.321; Motivation to Modify Wager with TS25.321's Teachings), a person of ordinary skill in the art would have been motivated to modify **Wager's** resource release system according to **TS25.321's** HARQ process teachings, yielding a system where the UE receives an ACK, flushes its HARQ buffer, and determines if its HARQ buffer is empty.

99. *See, e.g.,* **Wager** (emphasis added).

- **Wager-Prov., 4:7-20** ("*UE triggered resource release*

  Once a UE in CELL_FACH transmitting on a common E-DCH resource has emptied its RLC transmit buffer, it shall include the Scheduling Information (SI) field in the last MAC PDU, indicating Total E-DCH Buffer Status (TEBS) = 0. For users in CELL FACH, the NodeB will interpret this as the UE has finished transmission, and will release the common E-DCH resource, ***once all HARQ processes have finished***. Note that even when the HARQ process carrying the last MAC PDU with the SI field have completed, there

may still be previous HARQ processes that have not yet completed. The NodeB shall release the common E-DCH resource, making it available for use by other users, ***once all HARQ processes have finished*** or when the reordering timer T1 have expired for the last MAC PDU.")

- **Wager-Prov., 4:27-5:4** ("***The UE shall not release the common E-DCH resources until it has received an ACK for all HARQ processes***, or reached the maximum number of HARQ transmissions. Once the UE has transmitted the E-DCH resource release indication, and new data is received from higher layer to be transmitted, the UE shall start by transmitting preambles to request a new common E-DCH resource.")
- **Wager, Figs. 5A-B**

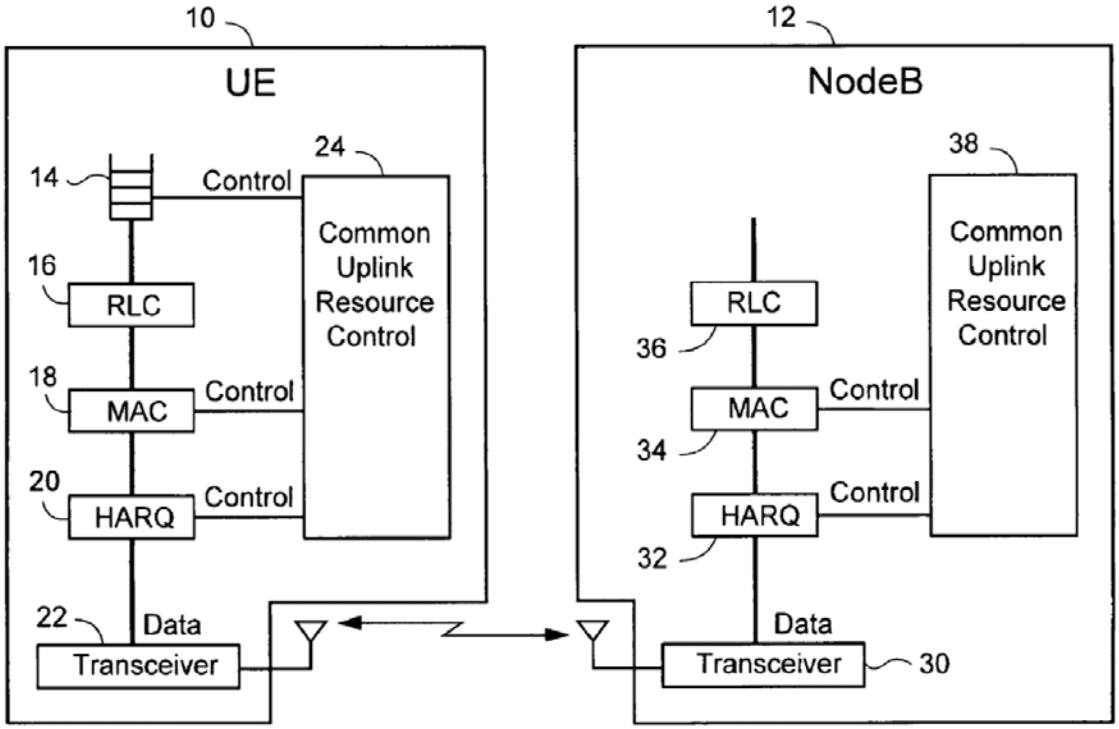

Figure 5A Figure 5B

- **Wager, Fig. 6**

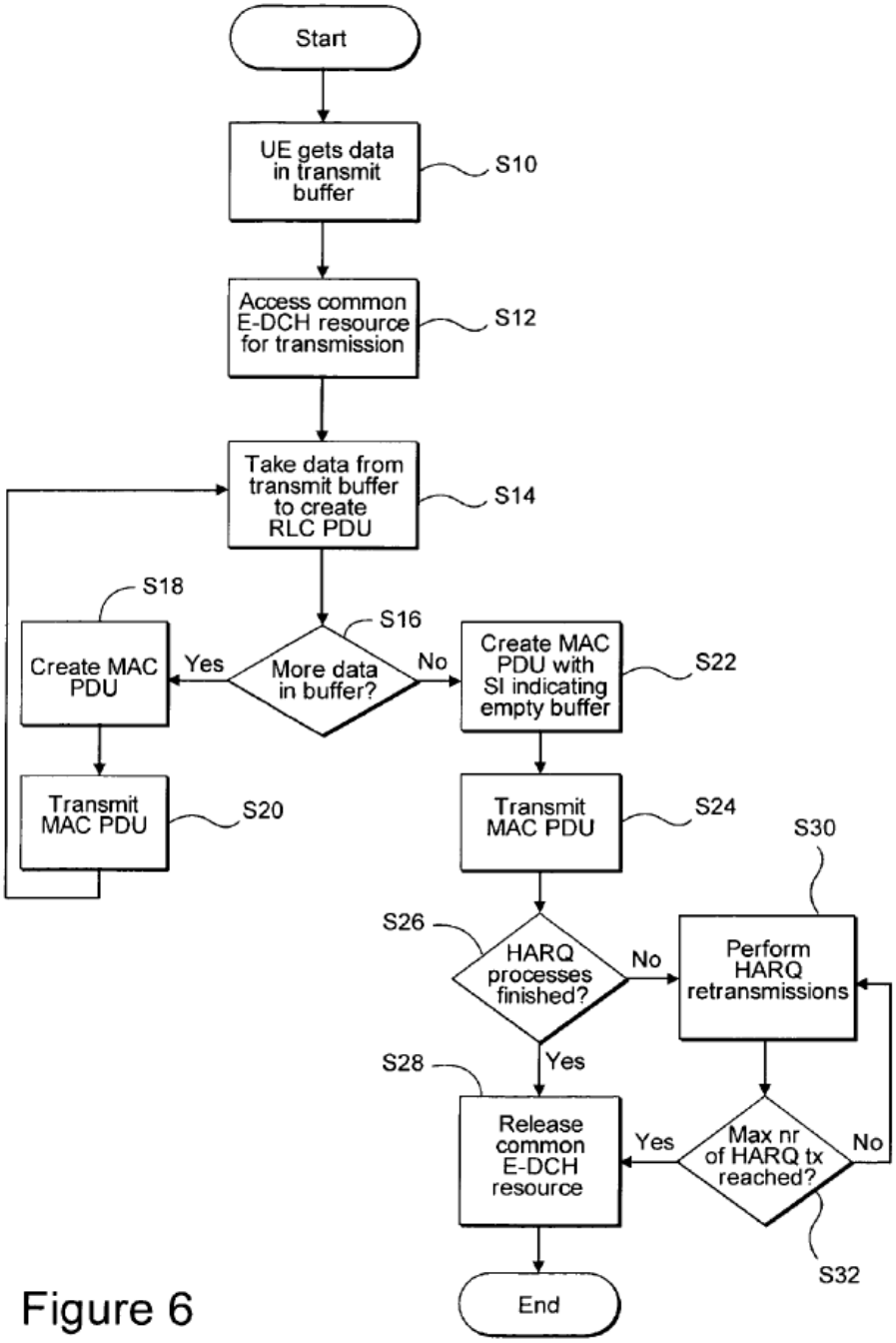

Figure 6

- **Wager, ¶7** ("The technology in this application provides a method and apparatus for efficiently using E-DCH resources***. A UE can release common E-DCH resources very quickly after a completed transmission.*** In addition or alternatively, a base station may release common E-DCH configurations

from the network side to free up common E-DCH resources for use by other UES. Various signaling schemes for quickly and effectively releasing common E-DCH resources between a UE and a base station are also provided. For example, existing signaling fields already in use in a CELL DCH service state may be given a different meaning for UES in a CELL FACH service state so that common E-DCH resources are quickly and effectively released. Alternatively, a new message or a new field in an existing message may be used.")

- **Wager, ¶34** ("On the other hand, data frames 2 and 3 were not satisfactorily received by the base station in this example. So rather than immediately freeing up the common E-DCH resources after receiving PDU 5, the base station may wait until data frames 2 and 3 are received, thereby ***finishing two "open' HARQ processes for the common E-DCH resource for this UE. The base station then sends an HARQ acknowledgement to the UE, which then stops using the common E-DCH resource***."

- **Wager, ¶36** ("FIG. 4 shows an example where an HARQ reordering timer (e.g., a T1 timer in 3GPP) is used as a timeout mechanism. The T1 timer controls "stall avoidance' in a MAC PDU reordering buffer to ensure in-sequence delivery of MAC PDUs to the RLC layer in case of HARQ retransmissions. If a gap in the MAC PDU Transmit Sequence Number (TSN) is detected, MAC SDU reassembly is stopped, and the T1 timer is started. If the missing TSN is received, then the MAC PDU reassembly continues, and the T1 timer is reset. If the missing TSN(s) are not received by the time the T1 timer expires, then the MAC PDU reassembly continues with missing or incomplete MAC SDUs being dropped and the T1 timer reset. The scenario is similar to that described for FIG. 3, except that the second transmission of MAC PDUs 2 and 3 is also unsuccessful. The UE may release the common E-DCH resource once it has received an acknowledgement (ACK) for all HARQ processes. But it may be undesirable for retransmissions to continue after a predetermined time period. If a UE empty buffer indication is received and/or the reordering timer or other suitable timer times out, then the base station may release the common E-DCH resource even though PDUs 2 and 3 have not yet been correctly received.")

- **Wager, ¶38** ("The radio base station may also stop a UE from transmitting on a common E-DCH resource by sending a Scheduling or grant message, e.g., by sending a grant message on the E-AGCH, indicating INACTIVE. The grant value set to INACTIVE functions as a common E-DCH resource release

command to the UE. For example, when the UE receives an E-AGCH identifying the UE, (e.g., with the UE's E-RNTI), with the absolute grant value set to INACTIVE on all HARQ processes, the UE releases the common E-DCH resource to make it available for use by other UEs.")

- **Wager, ¶44** ("FIG. 5B is non-limiting function block diagram of a NodeB base station 12 for controlling a common E-DCH resource assumed to have been allocated to the UE 10 shown in FIG. 5A. The base station 12 receives control signaling and data (baseband information) from the UE 10 over the radio interface via an antenna and one or more transceivers 30. The baseband information is processed in an HARQ controller 32 which detects successfully received PDUs and retires their corresponding HARQ processes. For incomplete HARQ processes, the HARQ controller 32 requests retransmission of the corresponding PDUs. The HARQ controller 32 sends the successfully received PDUs to a MAC controller 34 which performs reordering, reassembly, and logical channel de-multiplexing. The RLC controller 36 performs retransmission Support and re-segmentation. A common uplink radio resource controller 38 controls the HARQ controller 32 and MAC controller 34 to detect whether to release the common E-DCH resource allocated to the UE 10. For error cases, like signaling errors or UES moving out of coverage, the uplink radio resource controller 38 can use a release timer to release the common E-DCH resource. The uplink radio resource controller 38 can stop a UE from transmitting on a common E-DCH resource by sending a grant on the E-AGCH with the primary E-RNTI indicating INACTIVE on all HARQ processes.")

- **Wager, ¶45** ("FIG. 6 is a flowchart illustrating non-limiting example steps that may be implemented in a UE. Such as the non-limiting example UE shown in FIG.5A, for reliably and efficiently managing common E-DCH resources. Initially, the UE receives data in a transmit buffer such as the buffer 14 shown in FIG. 5A (steps S10). The UE sends a message on the RACH to the base station requesting access to a common E-DCH resource for uplink transmission (step S12). The RLC controller 16 then takes data from its transmit buffer to create RLC PDUs (step S14). A decision is made in step S16 whether there is any more data in the RLC buffer 14. If so, the MAC controller 18 creates a MAC PDU from the RLC PDU (step S18). The MAC PDU is then transmitted over the radio interface of the UE's transceiver (step S20) and control returns to step S14.")

- **Wager, ¶46 (**"If there is no more data in the UE's transmit buffer 14, the MAC controller 18 creates a MAC PDU that includes an indicator indicating that the mobile's transmit buffer is empty (step S22). The MAC controller 18 then provides that last MAC PDU to the transceiver 22 for transmission over the radio interface (step S24). ***A decision is made in the UE in step S26 whether all of the HARQ processes for this UE uplink transmission have been completed (step S26).*** If they are, the UE releases the common E-DCH resource (step S28). If the HARQ processes are not finished, the HARQ controller 32 in the base station performs the necessary HARQ retransmissions for the still pending HARQ processes (step S30). A decision is made in step S32 whether a maximum number of HARQ (re)transmissions has been reached. If not, HARQ (re)transmissions are continued in step 30. But if the maximum number has been reached, the common E-DCH resource is released (step S28).")

- **Wager, ¶50** ("FIG. 9 illustrates a non-limiting example protocol architecture for supporting efficient and reliable use and release of the common E-DCH resource by UEs. The UE uses the MAC-i protocol to transmit the Scheduling Information (SI) field indicating an empty buffer to the NodeB, thus implicitly indicating that it will release the common E-DCH resource ***after successful completion of all HARQ processes***. The NodeB uses the physical control channel E-AGCH, terminated in the PHY layer, to explicitly indicate the release of the common E-DCH resources to the UE.")

100. *E.g.,* **TS25.321** (emphasis added):

- **TS25.321 99** ("There is one HARQ entity at the UE. A number of parallel HARQ processes are used in the UE to support the HARQ entity, allowing transmissions to take place continuously while waiting for the feedback on the successful or unsuccessful reception of previous transmissions.

  At a given TTI, the HARQ entity identifies the HARQ process for which a transmission should take place. Also, based on the timing, it routes the receiver feedback (ACK/NACK information), relayed by the physical layer, to the appropriate HARQ process.")

- **TS25.321 99** ("After each TTI, ***the HARQ entity shall***:

  > - ***if the buffer of the HARQ process corresponding to the next TTI is empty***:

- notify the E-TFC selection entity that the next TTI is available for a new transmission;)

- **TS25.321 99** ("***Each HARQ process is associated with a physical buffer (HARQ buffer***).

  Each HARQ process maintains the state variable CURRENT_TX_NB, which indicates the number of transmissions that have taken place for the MAC-e PDU currently in the buffer. When the HARQ process is established, CURRENT_TX_NB shall be initialized to 0.

  At the time of a new transmission, the HARQ entity provides the HARQ profile to use for all transmissions and re-transmissions of this MAC-e PDU. This HARQ profile includes information on the maximum number of transmissions to perform, and the power offset with which to configure the physical layer.")

- **TS25.321 100** ("***The HARQ process shall:* [] *if an ACK is received from the RLS containing the serving cell***;…***flush the HARQ buffer***;")

- *See also* **TS25.321 at 19.**

(e) Element [1.d]

101. Element [1.d] recites **"releasing the E-DCH resource when the transmission of the SI with the TEBS equal to zero has been made and the HARQ buffer is empty."** This element is met by **Wager** in view of **TS25.321**.

102. **Wager discloses releasing the E-DCH resource** (*e.g.*, the UE will "trigger" the "release [of] common E-DCH resources") **when the transmission of the SI with the TEBS equal to zero has been made** (*e.g.*, when the UE includes the "(SI) field" indicating "(TEBS) = 0"; *see* [1.b]) **and all HARQ processes have finished** (*see* [1.c]).

103. **TS25.321 discloses that the HARQ buffer is empty** (*e.g.,* HARQ "buffer" is "flush[ed]" such that the "buffer … is empty"; *see* [1.c])**.**

104. **Wager** discloses a "UE triggered resource release" scheme in which the UE triggers the "release of … common E-DCH resources." Wager-Prov., 4:2-3, 4:8-28; Wager, ¶¶8, 31. As the name suggests, the scheme entails the UE triggering the release of a "common E-DCH resource[]" when the UE receives "an ACK for all HARQ processes," which occurs when "all HARQ processes have finished." *Id*. Once all HARQ processes have finished, the NodeB has successfully received all prior transmissions, and thus the UE no longer needs to utilize E-DCH resources to retransmit prior data. Thus, rather than have the UE hold onto E-DCH resources that are not being used, **Wager** teaches having the UE release them. As part of this scheme, the UE transmits MAC PDUs to the NodeB that "include[s] the Scheduling Information (SI) field in the last MAC PDU" "indicating that Total E-DCH Buffer Status (TEBS)=0." Wager-Prov., 4:7-20; Wager, ¶31; *see* [1.b].

105. As I mentioned above, **Wager** discloses that the UE—from the NodeB—receives an ACK after all HARQ processes are completed, but **Wager** leaves to a person of ordinary skill in the art the details regarding how the HARQ processes are managed in the UE. Wager-Prov., 4:7-20, 4:27-5:4. **TS25.321**

provides implementation details for HARQ processes at the UE, including how to carry out the HARQ processes using a HARQ buffer. TS25.321, 99-100.

106. As I discussed above pertaining to element [1.c], **Wager** in view of **TS25.321** renders obvious a system where a UE flushes, thus empties, its HARQ buffer when "all HARQ processes have finished," as indicated by the ACK received from the NodeB.

107. As discussed in Section IX.A.3 (TS25.321; Motivation to Modify Wager with TS25.321's Teachings), a person of ordinary skill in the art would have been motivated to apply **TS25.321's** HARQ buffer teachings to **Wager's** "UE triggered resource release" scheme, yielding a system in which the UE triggers the release of an E-DCH resource when its has transmitted SI with the TEBS field equal to zero (indicating that its E-DCH buffer is empty) and the UE's HARQ buffer is empty after it has flushed its HARQ buffer once receiving an ACK signal from the base station indicating that "all HARQ processes have finished." *See* [1.b], [1.c].

108. *See, e.g.,* **Wager** (emphasis added).

- **Wager-Prov., 2:9-15** ("In existing solutions the set of common E-DCH re sources available in each cell are limited. It is not be possible to indicate an unlimited number of configurations in the AICH response and also NodeB and air inter£ ace resource s need to be re served for each common E-DCH resource. Thus, it is preferable if ***each UE releases the common E-DCH resource as quickly as possible after completed transmission***.")

- **Wager-Prov., 3:3-5** ("It is a first object of the present invention to achieve a method and arrangement that allows a user equipment to release the common E-DCH resources in a fast and reliable manner.")

- **Wager-Prov., 4:2-3** ("***The release of the common E-DCH resources is signaled between UE and NodeB*** using existing signaling fields on L2 or L1.")

- **Wager-Prov., 4:7-20** ("***UE triggered resource release***

  Once a UE in CELL_FACH transmitting on a common E-DCH resource has emptied its RLC transmit buffer, it shall include the Scheduling Information (SI) field in the last MAC PDU, indicating Total E-DCH Buffer Status (TEBS) = 0. For users in CELL FACH, the NodeB will interpret this as the UE has finished transmission, and will release the common E-DCH resource, once all HARQ processes have finished. Note that even when the HARQ process carrying the last MAC PDU with the SI field have completed, there may still be previous HARQ processes that have not yet completed. The NodeB shall release the common E-DCH resource, making it available for use by other users, once all HARQ processes have finished or when the reordering timer T1 have expired for the last MAC PDU.")

- **Wager-Prov., 4:27-5:4** ("***The UE shall not release the common E-DCH resources until it has received an ACK for all HARQ processes,*** or reached the maximum number of HARQ transmissions. Once the UE has transmitted the E-DCH resource release indication, and new data is received from higher layer to be transmitted, the UE shall start by transmitting preambles to request a new common E-DCH resource.")

- **Wager, Fig. 3**

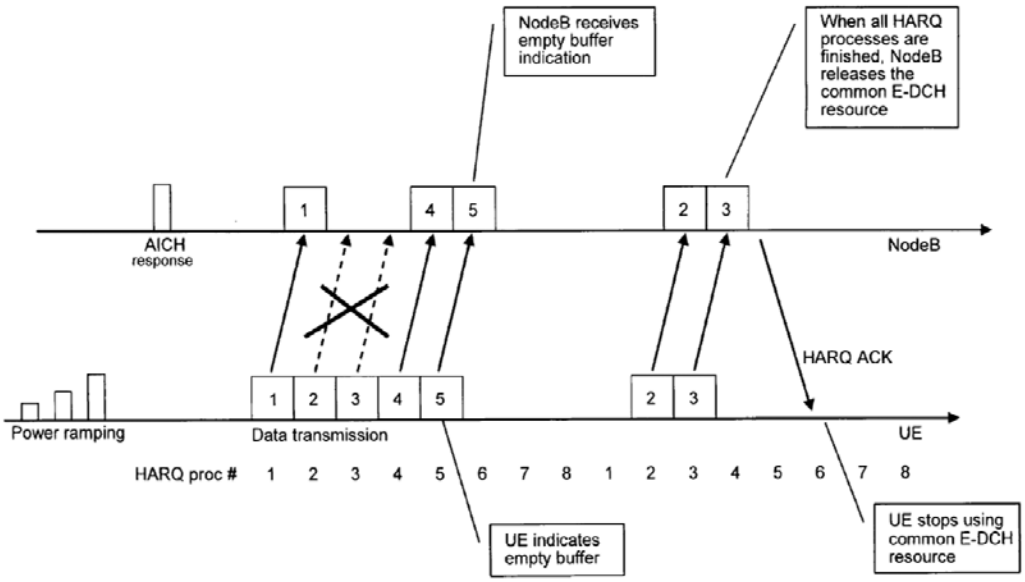

Figure 3

- **Wager, Fig.** 4

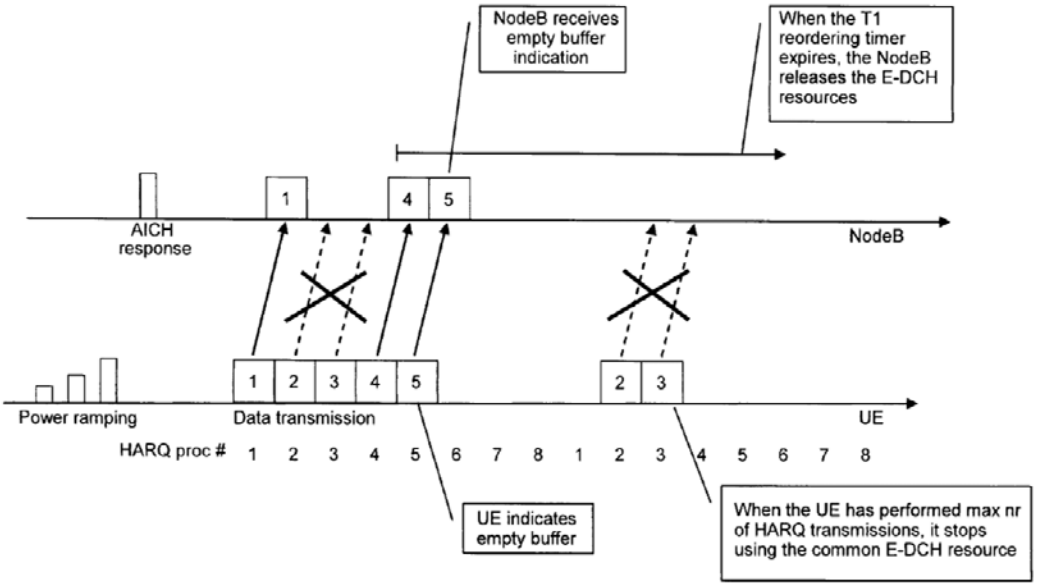

Figure 4

- **Wager, Fig. 6**

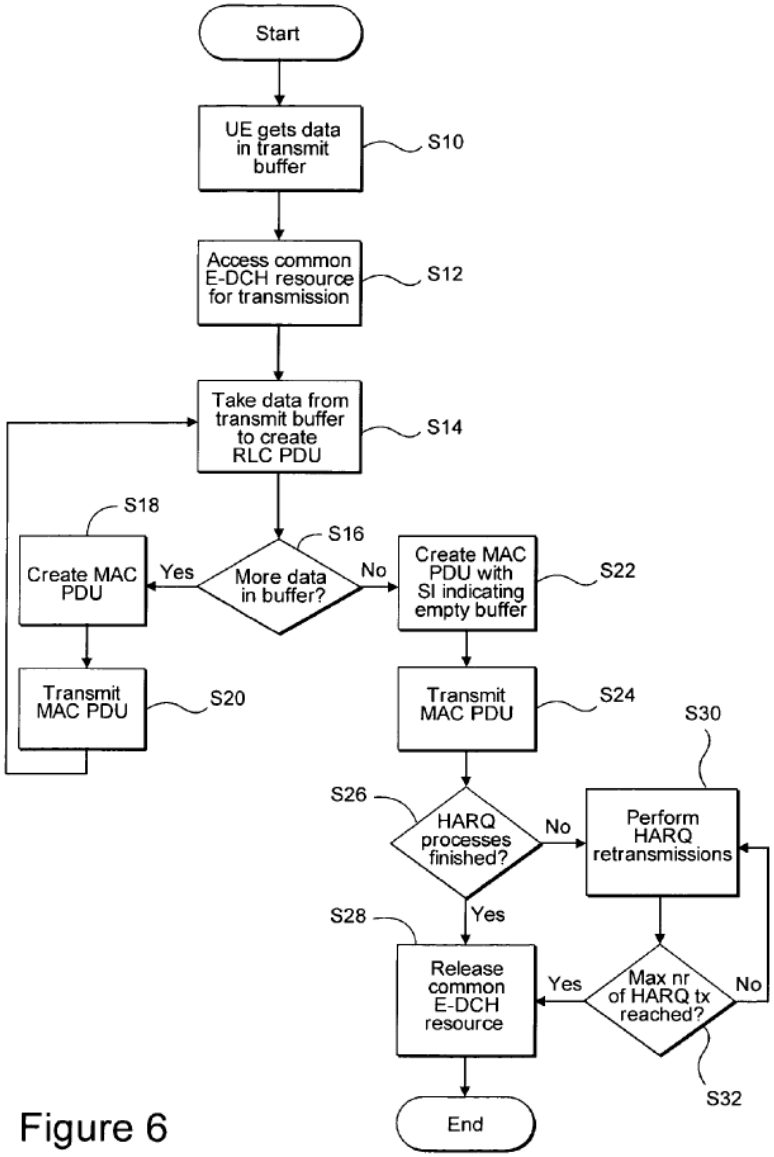

Figure 6

- **Wager, ¶7** ("The technology in this application provides a method and apparatus for efficiently using E-DCH resources***. A UE can release common E-DCH resources very quickly after a completed transmission***. In addition or alternatively, a base station may release common E-DCH configurations from the network side to free up common E-DCH resources for use by other UES. Various signaling schemes for quickly and effectively releasing common E-DCH resources between a UE and a base station are also provided. For example, existing signaling fields already in use in a CELL DCH service state may be given a different meaning for UES in a CELL FACH service

state so that common E-DCH resources are quickly and effectively released. Alternatively, a new message or a new field in an existing message may be used.")

- **Wager, ¶9** ("In one example variation, ***the UE releases the common E-DCH resource upon receiving an Acknowledgement (ACK) for all outstanding Hybrid Automatic Repeat Request (HARQ) processes associated with the UE's transmissions to the base station using the allocated common E-DCH resource HARO transmissions***. The common E-DCH resource may also be released when an HARQ reordering timer has expired for the last MAC PDU.")

- **Wager, ¶26** ("A common E-DCH resource is defined in the non limiting example of Release 8 by: an Uplink (UL) scrambling code, a Fractional-Dedicated Physical Channel (F-DPCH) code and timing offset, an E-DCH Absolute Grant Channel (E-AGCH)/E-DCH Relative Grant Channel (E-RGCH)/EDCH HARQ Acknowledgement Indicator Channel (E-HICH) codes and signatures, and High Speed Dedicated Physical Control Channel (HS-DPCCH) parameters such as power offsets and Channel Quality Indicator (CQI). The UE may transmit on the common E-DCH after receiving the AICH acknowledgement. The E-DCH Absolute Grant Channel (E-AGCH) from the base station to the UEs is also shown at the bottom of FIG.2. In the first E-AGCH frame, there is no transmission to the requesting UE, i.e., a discontinuous transmission (DTX). But in the second E-AGCH frame, the UE starts to monitor the E-AGCH for a confirmation of the uplink common E-DCH transmission which provides contention resolution. Before contention resolution, all transmissions on the common E-DCH resource must include the UE-specific E-RNTI in the MAC PDU to identify the UE. The uplink common E-DCH transmission is confirmed by the NodeB sending a grant on the E-AGCH with the UE specific E-RNTI. When contention is resolved in this way, the UE's E-RNTI is no longer needed in each MAC PDU. But contention resolution is not the problem addressed in this application. Rather, that problem relates to how the common E-DCH resource is released after completed uplink transmission by the UE. Because there is a limited set of common E-DCH resources in a system, a quick release is important to achieve good efficiency and increase capacity.")

- **Wager, ¶28** ("***The UE can make the decision to release the common uplink radio resource implicitly based on one or more detected conditions***. One example condition is that the UE detects it has no more data in its transmit

buffer to send. Another example condition is that a maximum time for using the common uplink radio resource has expired.")

- **Wager, ¶31** ("I***n accordance with one non-limiting example embodiment, a UE in CELL FACH state triggers release of the common E-DCH resource when the UE has emptied its Radio Link Protocol (RLC) transmit buffer.*** The UE includes an indicator in the already existing Scheduling Information (SI) field in the last Media Access Control (MAC) Packet Data Unit (PDU) transmitted from the RLC buffer indicating a transmit buffer status=0. The SI field is part of an existing message already used for the E-DCH. In particular, the Total E-DCH Buffer Status (TEBS), which is already used to request scheduling for E-DCH, can be set to 0 to indicate an empty buffer**.** This informs the base station that the UE is releasing the common E-DCH resource. For UEs in CELL FACH state, the base station interprets TEBS=0 in the SI field of the last MAC PDU as a signal that the UE is finished transmitting on the common E-DCH resource. In this way, both the UE and the base station promptly release the common E-DCH resource. An added benefit is achieved if already-existing signaling fields can be used to communicate this information as in this non-limiting example. But the indication may be communicated using a new message field or a new message altogether.")

- **Wager, ¶32** ("***In a variation on this example embodiment, the radio base station releases the common E-DCH resource after all Hybrid Automatic Repeat Request (HARQ) processes associated with this UE's transmission on the common E-DCH resource are finished.*** Parallel HARQ processes are used in many modern wireless communications systems to detect and correct data errors caused during transmission over the radio interface. Even when the HARQ process carrying the last MAC PDU with the SI field is completed, there may still be previous HARQ processes that are not yet completed.")

- **Wager, ¶33** ("***FIG.3 is a diagram showing a non-limiting example context for reliably and efficiently ending a UE's use of common E-DCH resource.*** The UE is in a CELL FACH service state (described above) and performs the power ramping procedure on the RACH sending a request for the common E-DCH until an AICH response from the base station (NodeB) is received. If a positive acquisition indicator corresponding to the selected signature is detected on the AICH, the UE starts transmitting data uplink frames 1-5, e.g., packet data units (PDUs) 1-5, with the common E-DCH resource using multiple HARQ processes. Here, five HARQ processes are running, one for each transmitted uplink PDUs 1-5. The base station satisfactorily receives

PDUs 1, 4, and 5 and so ends HARQ processes 1, 4, and 5. ***In addition, the UE includes an "empty buffer indication in the last PDU 5 to indicate to the base station that the UE does not have any immediate data to send on the common E-DCH.*** As a result, the quicker the base station can release the common E-DCH resource being used by this UE, the sooner other UEs with immediate data to send via the common E-DCH resource can be serviced. In one example embodiment, as soon as the UE sends the empty buffer indication, the UE may release the common E-DCH resource.")

- **Wager, ¶34** ("On the other hand, data frames 2 and 3 were not satisfactorily received by the base station in this example. So rather than immediately freeing up the common E-DCH resources after receiving PDU 5, the base station may wait until data frames 2 and 3 are received, thereby finishing two "open" HARQ processes for the common E-DCH resource for this UE. The base station then sends an HARQ acknowledgement to the UE, which then stops using the common E-DCH resource.")

- **Wager, ¶36** ("FIG. 4 shows an example where an HARQ reordering timer (e.g., a T1 timer in 3GPP) is used as a timeout mechanism. The T1 timer controls "stall avoidance' in a MAC PDU reordering buffer to ensure in-sequence delivery of MAC PDUs to the RLC layer in case of HARQ retransmissions. If a gap in the MAC PDU Transmit Sequence Number (TSN) is detected, MAC SDU reassembly is stopped, and the T1 timer is started. If the missing TSN is received, then the MAC PDU reassembly continues, and the T1 timer is reset. If the missing TSN(s) are not received by the time the T1 timer expires, then the MAC PDU reassembly continues with missing or incomplete MAC SDUs being dropped and the T1 timer reset. The scenario is similar to that described for FIG. 3, except that the second transmission of MAC PDUs 2 and 3 is also unsuccessful. ***The UE may release the common E-DCH resource once it has received an acknowledgement (ACK) for all HARQ processes.*** But it may be undesirable for retransmissions to continue after a predetermined time period. If a UE empty buffer indication is received and/or the reordering timer or other suitable timer times out, then the base station may release the common E-DCH resource even though PDUs 2 and 3 have not yet been correctly received.")

- **Wager, ¶40** ("Since such indicators can be prone to error because they are not covered by physical layer error correcting and error detecting codes used for higher layer data, in another example embodiment, the E-TCFI is used in combination with the UE sending an empty buffer indicator in the SI field in

the last PDU as described above. In this way, both explicit (command from the base station) and ***implicit (indicator from the UE) techniques are used to ensure fast and reliable release of the common E-DCH resource***.')

- **Wager, ¶45** ("***FIG. 6 is a flowchart illustrating non-limiting example steps that may be implemented in a UE. Such as the non-limiting example UE shown in FIG.5A, for reliably and efficiently managing common E-DCH resources.*** Initially, the UE receives data in a transmit buffer such as the buffer 14 shown in FIG. 5A (steps S10). The UE sends a message on the RACH to the base station requesting access to a common E-DCH resource for uplink transmission (step S12). The RLC controller 16 then takes data from its transmit buffer to create RLC PDUs (step S14). A decision is made in step S16 whether there is any more data in the RLC buffer 14. If so, the MAC controller 18 creates a MAC PDU from the RLC PDU (step S18). The MAC PDU is then transmitted over the radio interface of the UE's transceiver (step S20***)*** and control returns to step S14.")

- **Wager, ¶46** ("***If there is no more data in the UE's transmit buffer 14, the MAC controller 18 creates a MAC PDU that includes an indicator indicating that the mobile's transmit buffer is empty (step S22). The MAC controller 18 then provides that last MAC PDU to the transceiver 22 for transmission over the radio interface (step S24). A decision is made in the UE in step S26 whether all of the HARQ processes for this UE uplink transmission have been completed (step S26). If they are, the UE releases the common E-DCH resource (step S28).*** If the HARQ processes are not finished, the HARQ controller 32 in the base station performs the necessary HARQ retransmissions for the still pending HARQ processes (step S30). A decision is made in step S32 whether a maximum number of HARQ (re)transmissions has been reached. If not, HARQ (re)transmissions are continued in step 30. But if the maximum number has been reached, the common E-DCH resource is released (step S28).")

- **Wager, ¶51**. ("T***he technology in this application provides many different ways to efficiently use and release a common uplink radio resource like the common E-DCH resource.*** Several example embodiments use existing message fields and timers to accomplish these ends. Several example embodiments also enhance the reliability of the release by providing an opportunity for all HARQ processes to complete even though a UE buffer empty indicator is signaled and/or by using one or more timers to ensure that release is not held up for too long. Also, the fact that the scheduling

information is included in the MAC-i header means that it is covered by the HARQ transmissions, thus making the indication very reliable**.** The added possibility for the base station to explicitly release common E-DCH resources by using the E-AGCH provides a good mechanism for managing common E-DCH resources.")

- See my discussion for elements [1.pre], [1.b]-[1.c].

109. See, *e.g.*, **TS25.321** (emphasis added):

- **TS25.321 99** ("There is one HARQ entity at the UE. A number of parallel HARQ processes are used in the UE to support the HARQ entity, allowing transmissions to take place continuously while waiting for the feedback on the successful or unsuccessful reception of previous transmissions.

  At a given TTI, the HARQ entity identifies the HARQ process for which a transmission should take place. Also, based on the timing, it routes the receiver feedback (ACK/NACK information), relayed by the physical layer, to the appropriate HARQ process.")

- **TS25.321 99** ("After each TTI, ***the HARQ entity shall***:

  > - ***if the buffer of the HARQ process corresponding to the next TTI is empty***:
  >
  > - notify the E-TFC selection entity that the next TTI is available for a new transmission;)

- **TS25.321 99** ("***Each HARQ process is associated with a physical buffer (HARQ buffer***).

  Each HARQ process maintains the state variable CURRENT_TX_NB, which indicates the number of transmissions that have taken place for the MAC-e PDU currently in the buffer. When the HARQ process is established, CURRENT_TX_NB shall be initialized to 0.

  At the time of a new transmission, the HARQ entity provides the HARQ profile to use for all transmissions and re-transmissions of this MAC-e PDU. This HARQ profile includes information on the maximum number of

transmissions to perform, and the power offset with which to configure the physical layer.")

- **TS25.321 100** ("***The HARQ process shall:* [] *if an ACK is received from the RLS containing the serving cell***;…***flush the HARQ buffer***;")
- *See also* **TS25.321 at 19.**

(f) Claim 4

110. Claim 4 recites **"The method as in claim 1, further comprising transmitting using the E-DCH resource when a response is received on an E-DCH acquisition indication channel (E-AICH) to a preamble transmitted by the WTRU."** This additional limitation is met by **Wager**.

111. **Wager discloses transmitting using the E-DCH resource when a response is received on an E-DCH acquisition indication channel (E-AICH) to a preamble transmitted by the WTRU** (*e.g.*, UE transmits "preambles" to "access the common E-DCH channel"; the NodeB "having detected the preamble[s,]…acknowledges reception" by transmitting an "AICH sequence" to the UE and "informs the UE which common E-DCH resource it has [been] assigned"; the UE transmits using assigned "common E-DCH resource"). See my discussion for claim 1.

112. As I discussed in connection with element [1.pre], for **Wager's** UE in CELL_FACH state to transmit on the E-DCH, it needs to have access to the E-DCH

channel such that it is "temporarily assign[ed]" a E-DCH resource it can use to transmit. *See* [1.pre]; Wager-Prov., 1:12-23; Wager, ¶¶5-6. **Wager** further discloses utilizing an existing "[Random Access Channel] transmission" mechanism in UMTS ("Rel-99") to grant a UE in CELL_FACH access to the E-DCH channel. Wager-Prov., 1:24-25. As illustrated in Figure 1 (color-coded, above), **Wager** discloses "access [to] the common E-DCH channel in CELL_FACH starts…with preamble power ramping using randomly selected preamble signatures." Wager-Prov., 1:24-27; Wager, Fig. 3, ¶25. This preamble power ramping procedure, as the name suggests, entails **the UE transmitting preambles to a NodeB**, and each successive preamble (Fig. 1's block "#3" transmitted after block "#0" on RACH) is transmitted with an incrementally higher transmission power to ensure it is properly detected by the NodeB. Wager-Prov., Fig. 1, 1:24-27, 5:1-4; Wager, Fig. 3, ¶¶25, 33. Eventually one of the preambles is sent with a high enough transmission power that it is properly detected by the Node, and "the NodeB acknowledges reception with **an AICH sequence**" (Fig. 1's block "#6" received on AICH after transmission of blocks "#0" and "#3"), meaning that the NodeB transmits **an AICH sequence** to the UE on the **A**cquisition **I**ndicator **CH**annel, AICH. *Id;* Wager-Prov., Fig. 1 ("AICH"); Wager, Fig. 3 ("AICH response"). This transmission contains information that "informs the UE which common E-DCH resource [the NodeB] has assigned to the UE." Wager-Prov., 1:24-2:2; Fig. 1; Wager, ¶¶25, 33, Fig. 3. Because the AICH channel is used

to carry information regarding E-DCH resource assignments to the UE in **Wager's** system for Release 8 (Wager-Prov, 1:8-2:2; Wager, ¶¶25, 33, Fig. 3; *see* Sections IX.A.2 (Wager) and IX.A.3 (TS25.321; Motivation to Modify Wager with TS25.321's Teachings)), a person of ordinary skill in the art would have understood that **Wager's** AICH channel is specifically an E-DCH AICH channel, which they also would have understood to be abbreviated "E-AICH. " Indeed, **Wager** uses the "E" prefix, which is consistent with the common usage of the prefix to denote an "evolved" technology and that the WTRU has been adapted for use with advanced technologies such as evolved UMTS technologies. *See, e.g.,* Wager-Prov. 1:3-6, 1:8-2:21, 2:23-3:20, 4:8-20; Wager, Abstract, ¶¶3-9, 25-26. The **UE then transmits to the NodeB using the common E-DCH resource(s) assigned to it** through the preamble/AICH procedure discussed above. Wager-Prov., 1:24-2:2, Fig. 1 ("E-DCH" blocks); Wager, ¶¶25, 33, Fig. 3. This is depicted in Fig. 1: the UE transmits "E-DCH" blocks after receiving "#6" on AICH. Wager-Prov., Fig. 1; Wager-Prov., Fig. 3.

113. *See, e.g.,* **Wager** (emphasis added):

- **Wager-Prov., Fig. 1**

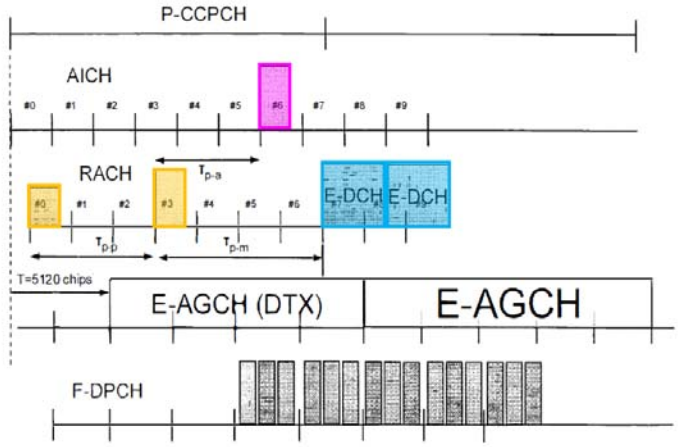

Fig. 1

- **Wager-Prov., 3:24-25** ("Figure 1 A diagram over common E-DCH transmission in CELL_FACH state")

- **Wager-Prov., 1:24-2:2** ("***The procedure to access the common E-DCH channel in CELL_FACH starts in the same way as Rel 99 RACH transmission, i.e. with preamble power ramping using randomly selected preamble signatures. Having detected the preamble, the NodeB acknowledges reception with an AICH sequence. It also informs the UE which common E DCH resource it has assigned to the UE***.")

- **Wager-Prov., 5:1-4** ("…***the UE shall start by transmitting preambles to request a new common E-DCH resource***.")

- **Wager, Fig. 2**

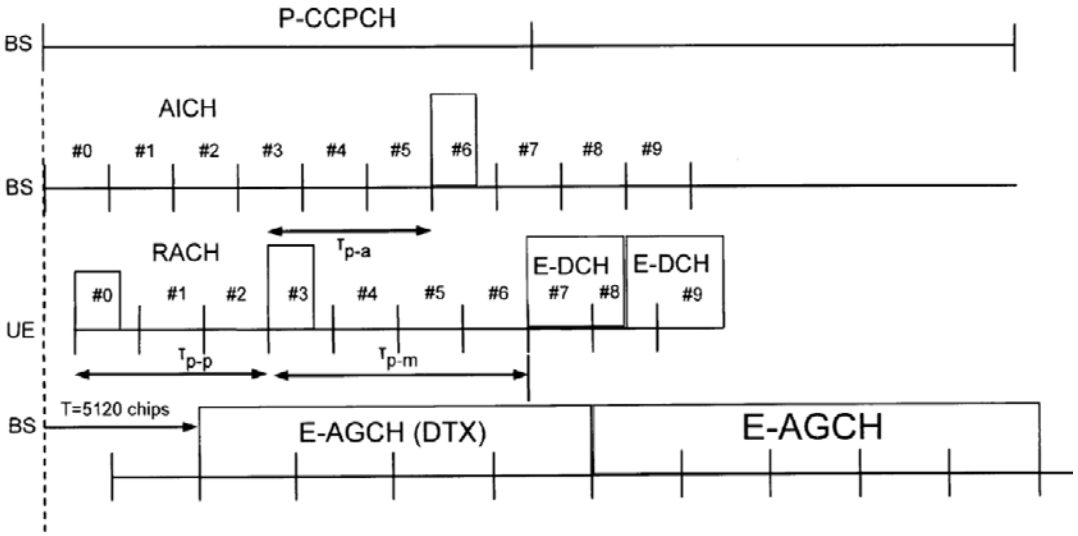

Figure 2

- **Wager, Fig. 3**

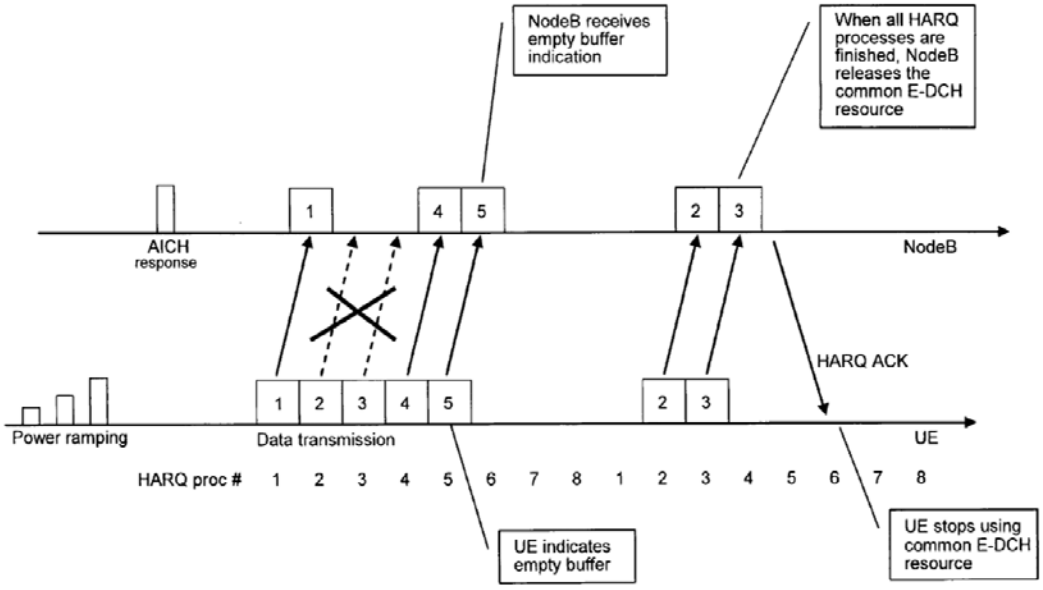

Figure 3

- **Wager, ¶25** ("As explained in the background, base stations (NodeBs) broadcast common E-DCH configurations located in their respective cells. Reference is now made to FIG. 2 to explain one proposed example of how common E-DCH resources may be acquired in 3GPP release 8. ***The base***

station (BS) transmits over a primary-common control physical channel (P-CCPCH) to provide downlink frame and acquisition indicator channel (AICH) timing information for UEs in the cell. The AICH is used by the base station to indicate reception of the RACH signature sequence over the random access channel (RACH) from a mobile terminal in the CELL FACH state. The AICH echoes back an identical signature sequence as received on the RACH. In FIG. 2, ***the UE in the CELL FACH state needs common E-DCH resources to communicate with the radio access network and sends a RACH request in time slot #0 at an initial low amplitude level. The base station does not receive that first RACH request because there is no AICH transmission. The UE sends a second preamble on the RACH after Tp-p in time slot #3 at a higher amplitude because UEs is often use a power ramping procedure on initial requests on the RACH. The base station receives and acknowledges the second preamble in time slot #6 on the AICH. In the AICH acknowledgement, the base station echoes back the same second preamble signature sequence and also informs the UE which common E-DCH resource it has assigned to the UE.***"）

- **Wager, ¶30** ("Preferably, though not necessarily, the release of the common E-DCH resource is signaled between the UE and the base station using existing signaling fields, e.g., existing signaling field(s) on protocol layer 2 (L2) or layer 1 (L1). For example, in example embodiments described below, certain signaling fields already in use in a CELL DCH state are used but with a different signaling field content interpretation for UEs in a CELL FACH state. When the common E-DCH resource is released by the UE, and new data is received from a higher protocol layer to be transmitted, the UE starts over and ***must request transmission by transmitting one or more RACH preambles to request a new common E-DCH resource***.")

- **Wager, ¶33** ("FIG.3 is a diagram showing a non-limiting example context for reliably and efficiently ending a UE's use of common E-DCH resource. ***The UE is in a CELL FACH service state (described above) and performs the power ramping procedure on the RACH sending a request for the common E-DCH until an AICH response from the base station (NodeB) is received. If a positive acquisition indicator corresponding to the selected signature is detected on the AICH, the UE starts transmitting data uplink frames 1-5, e.g., packet data units (PDUs) 1-5, with the common E-DCH resource using multiple HARQ processes.*** Here, five HARQ processes are running, one for each transmitted uplink PDUs 1-5. The base station satisfactorily receives

PDUs 1, 4, and 5 and so ends HARQ processes 1, 4, and 5. In addition, the UE includes an "empty buffer indication in the last PDU 5 to indicate to the base station that the UE does not have any immediate data to send on the common E-DCH. As a result, the quicker the base station can release the common E-DCH resource being used by this UE, the sooner other UEs with immediate data to send via the common E-DCH resource can be serviced. In one example embodiment, as soon as the UE sends the empty buffer indication, the UE may release the common E-DCH resource.")
114.

(g) Element [6.pre]

115. Element [6.pre] recites **"A wireless transmit/receive unit (WTRU) capable of communicating with a base station using an enhanced dedicated channel (E-DCH) resource while in a cell forward access channel (CELL_FACH) state, the WTRU comprising."** This element is met by **Wager**.

116. See my discussion for element [1.pre]. Element [1.pre] recites a method performed by a WTRU; element [6.pre] recites this WTRU itself. My discussion of [1.pre] therefore explains why [6.pre] is also met.

(h) Element [6.a]

117. Element [6.a] recites "**a E-DCH buffer.**" This element is met by **Wager**.

118. See my discussion for element [1.a].

(i) Element [6.b]

119. Element [6.b] recites **"a transmitter."** This element is met by **Wager**.

120. **Wager discloses that the WTRU** ("UE," *see* [6.pre]) **comprises a transmitter** (e.g., transmitter for "transmitting," *see* [1.b], claim 4). See my discussions for elements [6.pre] and [1.b] and claim 4.

121. **Wager** also discloses that a UE carries out transmissions. For example, **Wager** discloses that a UE "transmit[s] on a common E-DCH resource." Wager-Prov., 4:9; Wager, ¶25. As another example, **Wager** discloses the UE "transmit[s] the E-DCH resource release indication." Wager-Prov., 5:1-2; Wager, ¶33. As another example, **Wager** discloses the UE "transmit[s] preambles to request a new common E-DCH resource," as I discussed in connection with claim 4 above. Wager-Prov., 2:9-12, 5:1-4; Wager, ¶25; *see* claim 4. As such, a person of ordinary skill in the art would have understood that **Wager's** UE included a transmitter to perform these transmission functionalities. At minimum, a person of ordinary skill in the art would have found it obvious to implement **Wager's** UE to use a transmitter to perform these transmission functionalities because transmitters are well-known, standard components that are used for this purpose. *See, e.g.*, Chun, Fig. 8 (illustrating a "Transmitter"), ¶91, 92 ("[A] wireless communication apparatus 100 includes…an RF module 135"), 93, 94 (the "RF module 135 includes ***a transmitter***"), 95 (the "RF module 135 is used in…***transmitting information***"), 96 ("[T]he transmitter of the RF module 135 is controlled by the processor unit module 110 ***for transmitting*** the data block on a first physical channel, wherein the data

block comprises the control information. ***The transmitter is also adapted to transmit*** an indicator having a specific value on a second physical channel…"), 97 (emphasis added); *see also* Hakola-Prov, Fig. 7, ¶¶55, 56 ("FIG. 7 is a diagram of exemplary components of a mobile station (e.g., handset)… ***Pertinent internal components of the telephone include…a receiver/transmitter unit***"), 57 (emphasis added); Hakola, Fig. 10, ¶70.

122. *See, e.g.,* **Wager** (emphasis added):

- **Wager-Prov.**, **4:7-20** ("UE triggered resource release

  Once a UE in CELL_FACH transmitting on a common E-DCH resource has emptied its RLC transmit buffer, it shall include the Scheduling Information (SI) field in the last MAC PDU, indicating Total E-DCH Buffer Status (TEBS) = 0. For users in CELL FACH, the NodeB will interpret this as the UE has finished transmission, and will release the common E-DCH resource, once all HARQ processes have finished. Note that even when the HARQ process carrying the last MAC PDU with the SI field have completed, there may still be previous HARQ processes that have not yet completed. The NodeB shall release the common E-DCH resource, making it available for use by other users, once all HARQ processes have finished or when the reordering timer T1 have expired for the last MAC PDU.")

- **Wager-Prov., 4:27-5:4** ("***The UE shall not release the common E-DCH resources until it has received an ACK for all HARQ processes***, or reached the maximum number of HARQ transmissions. Once the UE has transmitted the E-DCH resource release indication, and new data is received from higher layer to be transmitted, the UE shall start by transmitting preambles to request a new common E-DCH resource.")

- **Wager, ¶2** ("The technology pertains to the cellular radio communications, and particularly, to managing uplink radio resources allocated to mobile terminals f***or transmitting information to a radio access network (RAN)***.")

- **Wager, ¶9** ("In one example variation, the UE releases the common E-DCH resource upon receiving an Acknowledgement (ACK) for all outstanding Hybrid Automatic Repeat Request (HARQ) processes associated with ***the UE's transmissions to the base station using the allocated common E-DCH resource*** HARO transmissions. The common E-DCH resource may also be released when an HARQ reordering timer has expired for the last MAC PDU.")

- **Wager, ¶25** ("As explained in the background, base stations (NodeBs) broadcast common E-DCH configurations located in their respective cells. Reference is now made to FIG. 2 to explain one proposed example of how common E-DCH resources may be acquired in 3GPP release 8. The base station (BS) transmits over a primary-common control physical channel (P-CCPCH) to provide downlink frame and acquisition indicator channel (AICH) timing information for UEs in the cell. The AICH is used by the base station to indicate reception of the RACH signature sequence over the random access channel (RACH) from a mobile terminal in the CELL FACH state. The AICH echoes back an identical signature sequence as received on the RACH. In FIG. 2, t***he UE in the CELL FACH state needs common E-DCH resources to communicate with the radio access network and sends a RACH request in time slot #0 at an initial low amplitude level.*** The base station does not receive that first RACH request because there is no AICH transmission. ***The UE sends a second preamble on the RACH after Tp-p in time slot #3 at a higher amplitude because UEs is often use a power ramping procedure on initial requests on the RACH.*** The base station receives and acknowledges the second preamble in time slot #6 on the AICH. In the AICH acknowledgement, the base station echoes back the same second preamble signature sequence and also ***informs the UE which common E-DCH resource it has assigned to the UE***.")

(j) Element [6.c]

123. Element [6.c] recites **"a hybrid automatic repeat request (HARQ) buffer."** This element is met by **Wager** in view of **TS25.321**.

124. See my discussion for element [1.c].

(k) Element [6.d]

125. Element [6.d] recites **"a processor; wherein the processor."** This element is met by **Wager**.

126. **Wager discloses that the WTRU** (*see* [6.pre]) **comprises a processor** (*e.g.*, processor that performs the "UE triggered resource release" process).

127. See my discussion for elements [6.pre], [1.a]-[1.d].

128. **Wager** also discloses the "UE" performs, as I discussed in relation to elements [1.a]-[1.d], a "UE triggered resource release" scheme (Wager-Prov., 4:2-3; Wager, ¶8). This resource release process entails several steps of making determinations and performing operations based on those determinations. As such, a person of ordinary skill in the art would have understood that **Wager's** UE used a processor to perform **Wager's** resource release process because a processor would have been used to perform the types of determinations and operations required by this resource release process. At minimum, a person of ordinary skill in the art would have found it obvious to implement **Wager's** UE to use a processor to perform these processor functionalities because processors are well-known, standard components that are used for this purpose. *See, e.g.*, Chun, Fig. 8 (illustrating a "Processing unit module"), ¶91, 92 ("[A] wireless communication apparatus 100 includes *a processing unit module 110* such as a microprocessor and a digital processor…"), 93, 94 ("[T]he processing unit module 110…process[es] the radio signal."), 95 ("[T]he processing unit module 110 is appropriately used for the wireless

communication apparatus to receive data, process the received data and transmit the processed data."), 96 ("Preferably, the processing unit module 110 is adapted to process control information…"), 97 ("Preferably, the processing unit module 110 is adapted to *determine whether a specific event has occurred and generate a data block*. The transmitter of the RF module 135 is controlled by the processing unit module 110 for transmitting an indicator…") (emphasis added); *see also* Hakola-Prov., Fig. 7, ¶¶48, 55, 56 ("Pertinent internal components of the telephone include a ***Main Control Unit (MCU) 703***…") 57-59, 60 ("Digital to Analog Converter (DAC) 743 converts the signal and the resulting output is transmitted to the user through the speaker 745, all under control of a ***Main Control Unit (MCU) 703*** -- which can be implemented as a Central Processing Unit (CPU) (not shown)."), 61; Hakola, Figs. 9, 10 (depicting "PROCESSOR"), ¶¶62-65, 67-70 (emphasis added). For example, a person of ordinary skill in the art would have understood, or at minimum found obvious, that the UE's processor determines if its E-DCH and HARQ buffers are empty. As another example, a person of ordinary skill in the art would have understood, or at minimum found obvious, that the UE's processor triggers the release of resources if certain conditions are met.

129. *See, e.g.,* **Wager** (emphasis added).

- **Wager, ¶23** ("Thus, for example, it will be appreciated by those skilled in the art that block diagrams herein represent conceptual views of illustrative circuitry embodying the principles of the technology. ***Similarly, it will be***

appreciated various processes described may be substantially represented in a computer-readable medium and can be executed by a computer or processor.")

- **Wager, ¶24** ("The functions of the various elements including functional blocks labeled or described as "processor or "controller' or "computer may be provided through the use of dedicated hardware as well as hardware capable of executing software. When provided by a processor, the function may be provided by a single dedicated processor, by a single shared processor, or by a plurality of individual processors, some of which may be shared or distributed. Moreover, a "processor" or "controller" may include, without limitation, digital signal processor (DSP) hardware, ASIC hardware, read only memory (ROM), and/or other storage media.")

(l) Element [6.e]

130. Element [6.e] recites **"determines if the E-DCH buffer is empty."** This element is met by **Wager**.

131. See my discussion for element [1.a].

132. As I discussed in connection with element [6.d], a person of ordinary skill in the art would have understood that **Wager** not only to render obvious but discloses that a UE determining that it's E-DCH buffer is empty (*see* [1.a]) is performed by the processor because a processor is a well-known and standard component that is used to perform processing functionalities such as determining whether a condition is satisfied (*e.g.*, if the E-DCH buffer is empty). *See, e.g.*, Chun, Fig. 8, ¶¶91-97; Hakola-Prov., Fig. 7, ¶¶48, 55-61; Hakola, Figs. 9-10, ¶¶62-65, 67-70.

(m) Element [6.f]

133. Element [6.f] recites **"causes the transmitter to transmit to the base station scheduling information (SI), wherein the SI includes a total E-DCH buffer status (TEBS) equal to zero for the E-DCH buffer when the processor has determined that the E-DCH buffer is empty."** This element is met by **Wager**.

134. See my discussion for element [1.b].

135. As I discussed in connection with element [6.d], a person of ordinary skill in the art would have understood that **Wager** discloses, or at minimum renders obvious, that the processor causes the transmitter (*see* 6.b]) to transmit to the base station scheduling information (SI), wherein the SI includes a total E-DCH buffer status (TEBS) equal to zero for the E-DCH buffer when the processor has determined that the E-DCH buffer is empty (*see* [1.b]) because a processor is a well-known and standard component that is used to perform processing functionalities such as determining whether certain conditions are satisfied (*e.g.*, when the E-DCH buffer is empty) and, if so, following a set of instructions for triggering **Wager's** resource release process (*e.g.*, transmitting SI with TEBS=0). *See, e.g.*, Chun, Fig. 8, ¶¶91-97; Hakola-Prov at Fig. 7, ¶¶48, 55-61; Hakola, Figs. 9-10, ¶¶62-64, 67-70.

(n) Element [6.g]

136. Element [6.g] recites **"determines if the HARQ buffer is empty."** This element is met by **Wager**.

137. See my discussion for element [1.c].

138. As I discussed in connection with element [6.d], **Wager** not only renders obvious but affirmatively discloses that determining when a HARQ buffer is empty (*see* [1.c]) is performed by a processor because a processor is a well-known and standard component that is used to perform processing functionalities such as determining whether certain conditions are satisfied (*e.g.*, if the HARQ buffer is empty). *See, e.g.*, Chun, Fig. 8, ¶¶91-97; Hakola-Prov at Fig. 7, ¶¶48, 55-61; Hakola, Figs. 9-10, ¶¶62-65, 67-70.

(o) Element [6.h]

139. Element [6.h] recites **"releases the E-DCH resource when the transmission of the SI with the TEBS equal to zero has been made and the HARQ buffer is empty."** This element is met by **Wager**.

140. See my discussion for element [1.d].

141. As I discussed in connection with [6.d], **Wager** not only renders obvious but affirmatively discloses that this release of E-DCH resources is performed by a processor because a processor is a well-known and standard component that is used to perform processing functionalities such as determining whether certain conditions are satisfied (*e.g.*, when the transmission of the SI with the TEBS equal to zero has been made and the HARQ buffer is empty), and if so, following a set of instructions for triggering **Wager's** resource release process. *See*,

e.g., Chun, Fig. 8, ¶¶91-97; Hakola-Prov at Fig. 7, ¶¶48, 55-61; Hakola, Figs. 9-10, ¶¶62-65, 67-70.

(p) Claim 10

142. Claim 10 recites **"the WTRU as in claim 6, wherein the transmitter transmits using the E-DCH resource when a response is received on an E-DCH acquisition indication channel (E-AICH) to a preamble transmitted by the WTRU."** This element is met by **Wager**.

143. See my discussion for claim 6.

144. As I discussed in connection with element [6.b], **Wager** not only renders obvious but affirmatively discloses that a transmitter performs the recited transmission because a transmitter is a well-known and standard component that performs this functionality. *See, e.g.*, Chun, Fig. 8, ¶¶91-97; *see also* Hakola-Prov, Fig. 7, ¶¶55-57; Hakola, Fig. 10, ¶70.

B. <u>Ground 2: Lee in view of Nokia and TS25.321 (Claims 1, 4, 6, 10)</u>

145. **Lee**, **Nokia**, and **TS25.321** are all directed to communication systems built upon Universal Mobile Telecommunications System (UMTS) technologies. *See, e.g.*, Lee, Figs. 1-2, 1:9-15, 1:25-2:5; Nokia, 1; TS25.321, 2, 12. The technical specifications relating to UMTS was developed and maintained by Third Generation Partnership Project (3GPP) and uses W-CDMA radio access technology for 3G cellular communications. Ex. 1037 (https://www.3gpp.org/specifications-

technologies/specifications-by-series/specifications-per-tsg-round) ("The term "3GPP specification" covers all GSM (including GPRS and EDGE), W-CDMA (including HSPA), LTE (including LTEAdvanced and LTE-Advanced Pro) and 5G specifications.") (last accessed: July 12, 2023). Though the UMTS standard preceded the LTE standard (4G cellular communication), a person of ordinary skill in the art would have understood that LTE is an evolved form of UMTS and thus employs and builds upon many existing technologies used in UMTS. Indeed, a person of ordinary skill in the art would have understood that LTE technologies were being developed while UMTS was ubiquitous and borrowed many technologies from UMTS, and thus LTE has many similarities to UMTS. For example, several technologies used in the higher layers in UMTS and LTE are very similar to one another. At the time **Lee** was filed in January 2007 and published in July 2007 (Lee, cover page), UMTS systems were widespread and LTE systems were still in the process of being developed—indeed, features of LTE were being introduced later that year with, for example, 3GPP's Release 8 (v8.0.0) around late 2007. *See* https://www.3gpp.org/ftp/Specs/archive/36_series/36.321 (Ex. 1039) (showing Release 8 (v8.0.0) released on December 20, 2007) (last accessed July 13, 2023); *see also* Ex. 1040 (cover page). Accordingly, a person of ordinary skill in the art would have understood that the LTE ("evolved UMTS") system described in **Lee** was based on UMTS technology.

146. In relevant part, **Lee** teaches a method performed by a UE to release radio resources for an "evolved UMTS system" (which is what **Lee** properly characterizes as "LTE") by communicating on an uplink (UL) channel to an eNB to indicate when the UE's transmission buffer is empty. *See* Lee, 1:9-15. A person of ordinary skill in the art would have understood that LTE is an "evolved version" of a conventional UMTS system, and that LTE is also based on "a conventional UMTS system" described in **Lee**. *See* Lee, 1:9-11. Like **Lee**, **Nokia** is also directed to improving UMTS by proposing a specific enhancement to UL transmissions in "REL8" (Release 8). Specifically, **Nokia** discloses granting UEs access to a faster dedicated channel (E-DCH) for performing UL transmission while operating in a CELL_FACH state, allowing UEs to, *e.g.*, have fast power control and reduce signaling delays without compromising UL performance. *See* Nokia, 1-3; *see also* Section IX.B.2 (Nokia; Motivation to Modify Lee with Nokia's Teachings) below. And relatedly, **TS25.321** discloses standardized ways to determine that resources are no longer needed for transmissions in a UMTS system by setting forth protocols to determine and communicate that a UE's transmission buffer (the E-DCH buffer storing data for new transmissions) and corresponding error correction buffer (the HARQ buffer storing prior data transmissions for retransmission in case they are not successfully received by the base station) are empty. *See* TS25.321, 99-100. As discussed below, a person of ordinary skill in the art would have been motivated to

apply **Nokia's** teachings to **Lee** in order to allow the UE to advantageously, *e.g.*, enable fast power control (Nokia, 1-3) and **TS25.321's** teachings to **Lee** to provide more detail on how to release resources in an evolved UMTS/LTE system.

1. Lee

147. **Lee**, titled "Method for scheduling radio resources in mobile communication system" recognizes the problem of "wasted radio resources" in prior art systems and discloses a resource release scheme for a system in which a UE is assigned dedicated resources that "improv[es the] efficiency of radio resources available for a mobile communication system." Lee, 8:8-17. Specifically, **Lee** discloses releasing radio resources that are no longer needed by a UE (*i.e.*, not required for transmission) in an "evolved version of a conventional wireless UMTS system" (which, as **Lee** states, describes an "LTE" system). Lee, 1:9-15, 8:8-9:22, 17:1-6. **Lee's** resource release scheme entails having a UE initiate a resource release, and discloses using a "conventional" HARQ error correction and control scheme on the downlink channel to do so. Lee, Figs. 1, 5. 6:19-7:14, 8:8-9:22, 13:18-15:12. Once the UE determines that "there is no data left for transmission in [its] buffer," it "transmit[s] an indication" to the eNode-B to inform the eNode-B "that [its] radio resources are no longer needed," because a UE uses radio resource to carry out transmissions, and a UE that has no transmissions to carry out does not have a use for its resources. Lee, 9:13-20, 10:9-11, 13:18-23, 15:9-17, 16:7-10, Figs.

6, 7. Accordingly, the "resources [are] released by [the] UE," and they could be "re-allocated," by the eNode-B, to "other UEs." *Id.* **Lee** also discloses that its UE functions as a "transmitter of an uplink signal." Lee, 12:12-16; 13:15-17, 15:11-12, 7:24-25, 3:21.

2. Nokia; Motivation to Modify Lee with Nokia's Teachings

148. **Lee** discloses an efficient system of releasing radio resources used for uplink transmissions in an "evolved version of a conventional UMTS system" (*i.e.*, a form of LTE) network, but leaves out details regarding how to carry out UL transmissions in a way that more efficiently utilizes the resources in the network. Lee, Abstract, 1:5-6, 1:9-15, 3:19-4:5, 8:8-17, 12:24-15:20, 17:1-6. At the time of **Lee**, features of LTE were being developed, and were first introduced starting around late 2007 with Release-8, v8.0.0. Indeed, **Lee** was disclosed at least as early as 2007,[5] _before LTE was released and while use of UMTS was widespread. *See* https://www.3gpp.org/ftp/Specs/archive/36_series/36.321 (Ex. 1039) (showing Release 8 (v8.0.0) released on December 20, 2007) (last accessed July 13, 2023); *see also* Ex. 1040 (cover page). A person of ordinary skill in the art would have also understood that **Lee's** "evolved version" (Lee, 1:9-11) is based on a "conventional

[5] **Lee's** disclosure (an international publication) was originally filed in January 2007 (Lee, cover page).

UMTS system," disclosed in **Nokia** (Nokia, 1), because each technology builds off the previous iteration (*e.g.*, LTE and/or evolved UMTS each build off UMTS). Indeed, for example, the channels disclosed in Lee's "evolved version" (*i.e*. High-Speed Shared Control Channel, HS-SCCH, and High Speed Downlink Shared Channel, HS-DSCH) are channels that are also used in UMTS. *Compare* Lee, 1:9-11, 6:24-7:2 ("The eNode-B informs the UE of the determined information over an HS-SCCH (High-Speed Downlink Shared Control Channel) and transmits a corresponding data packet (***HS-DSCH***) at a time associated with the transmission of the information over the ***HS-SCCH***.") *with* TS25.321, 86 ("There is one HARQ entity at the UE which processes the HARQ process identifiers received on the ***HS-SCCH*** transmissions associated with MAC-hs PDUs received on the ***HS-DSCH***.") (emphasis added). Accordingly, a person of skill in the art would have been motivated to look to a standard that provides details regarding how to carry out UL transmissions while "reducing…the amount of wasted radio resources" (Lee, 8:10-13), which Nokia provides, as I describe below.

149. **Nokia**, titled "Further discussion on enhanced CELL_FACH in REL8," is a 3GPP submission by Nokia to the to the 3rd Generation Partnership Project ("3GPP") Radio Access Network Working Group 2 ("WG2"). Nokia, 1. **Nokia** was a proposal submitted for a 3GPP meeting, #59, held August 20-24, 2007 in Athens, Greece. Nokia, 1. **Nokia** is directed to improving uplink transmissions in a UMTS

system ("REL99") that enabled UEs to conserve resource utilization without compromising uplink performance. Nokia, 1-2. In this regard, **Nokia** discloses "apply[ing]" faster data rate "E-DCH channels," which are dedicated, for a "CELL_FACH state for uplink transmissions," which "provide[s] HARQ" as well as various other advantages such as "reduce[d] signalling delays and increase[d] uplink data rates," "fast power control," and an increase in the "[d]elivered payload per [random access] procedure" to on the order of "[k]ilobytes." Nokia, 2-3. By allowing UEs in CELL_FACH to make UL transmissions on E-DCH channels using HARQ and power control, **Nokia** teaches that "significantly larger data amounts [are] delivered in CELL_FACH state with high reliability." Nokia, 2. In order for a UE to get "direct access to E-DCH channels," **Nokia** discloses that the UE and base station perform a "PRACH preamble/AICH acknowledgment" procedure, where the UE transmits a "PRACH preamble"[6] to the base station and receives an acknowledgement from the base station on an "acquisition indication channel"

[6] A "PRACH preamble" is a signal sent from the UE to a NodeB over the **P**hysical **R**andom **A**ccess **CH**annel (PRACH) for the purposes of establishing synchronization for uplink transmissions. Ex. 1038 (https://www.sharetechnote.com/html/RACH_LTE.html) (last accessed: July 12, 2023).

(AICH) containing "UL resource allocation[s]" (which informs the UE which resource it can use) in response. Nokia, 2. Once the UE has gained "uplink access," the UE uses the E-DCH resource it was allocated to carry out uplink data transmissions to the base station on E-DCH channels. Nokia, 2.

150. Like **Lee**, **Nokia** is analogous to and in the same field as the '809 patent, which includes wireless communication, and is reasonably pertinent to the alleged problems identified in the '809 patent (including implementing an efficient release of radio resources in a wireless communications system). '809 patent, 1:25-33, 3:59-4:13, 5:34-61, 6:21-27, 6:46-63; Lee, Abstract, 1:5-6, 8:8-17, 12:24-15:19, 17:1-6; Nokia, 1-2. For example, **Lee** is directed to a method in "a mobile communication system," that entails a UE, once it has "complete[d] uplink data transmission," "transmit[ting] a radio resource allocation release request message" to an eNode-B on the uplink before releasing its already-allocated resources. Lee, 8:9, 15:8-10; *compare with* '809 patent, 1:25-33, 4:7-13 ("The present application is related to wireless communication" in which "WTRU 210 may use these E-DCH resources for UL transmission until it receives a trigger, at which point the WTRU 210 will release the resources 415."), 5:34-36 ("a method to release E-DCH resources based on the status of a WTRU's 210 queue or 35 buffer."), 6:56-59 ("…the WTRU 210 is releasing the resources once the transmission of data in the HARQ buffers is completed."). And **Nokia** provides more details regarding the uplink transmissions:

e.g., **Nokia** pertains to a method of "apply[ing] E-DCH channels…for uplink transmissions" such that "significantly larger data amounts to be delivered…with high reliability from the UE to the network." Nokia, 3. As I discuss below, a person of ordinary skill in the art would have been motivated to modify **Lee** with **Nokia's** uplink transmission teachings, yielding a system with improved resource utilization (as taught by **Lee**) for uplink transmissions (without compromising on uplink performance) by having the UE use dedicated E-DCH resources to communicate with a base station while in a CELL_FACH state, and implementing HARQ procedures on the uplink (as taught by **Nokia**).

151. First, a person of ordinary skill in the art would have been motivated to modify **Lee** to according to **Nokia's** E-DCH and HARQ teachings to improve uplink data transmissions existing in UMTS systems. Nokia, 1-2. As **Nokia** explains, existing UMTS technologies applied a High Speed Downlink Shared Channel ("HS-DSCH") to improve "downlink transmission[s]" for UEs operating in a "CELL_FACH" state, which achieved "reduced RRC signalling delays and higher bit rates." Nokia, 2. But no similar enhancement was applied to the *uplink*. *Id.* Specifically, **Nokia** proposed "apply[ing] E-DCH channel for an enhanced CELL_FACH for uplink transmissions" in a CELL_FACH state, which would provide "HARQ and power control," thus "enabling significantly larger data amounts to be delivered in CELL_FACH state with high reliability," "fast and

dynamic UL resource allocation," and "reduce[d] signalling delays." Nokia, 1-3. Moreover, because **Lee** explicitly mentions using "HARQ" for the downlink channel (Lee, Fig, 5, 6:19-21), a person of ordinary skill in the art would have additionally found it advantageous to apply **Nokia's** HARQ implementation for uplink transmissions as well in order to realize the aforementioned performance benefits.

152. Second, **Nokia** discloses that a UE can obtain "uplink access" to dedicated E-DCH resources by performing the "PRACH [random access] preamble/AICH acknowledgement procedure," which is a "PRACH preamble" procedure combined with an "AICH acknowledgement" procedure. Nokia, 2 ("The uplink access can be initiated as in Rel'99 by PRACH preamble/AICH acknowledgement procedure"). A person of ordinary skill in the art would have understood that **Nokia's** "PRACH preamble/AICH acknowledgement procedure" is also used to enable a UE to obtain uplink (UL) resource allocations through Node B based scheduling before it starts transmitting on the uplink. A person of ordinary skill in the art would have recognized that **Nokia** provides more details of UMTS technologies incorporated in **Lee's** system and how **Lee's** system worked, specifically how WTRUs obtained "uplink access" to E-DCH resources.

153. A person of ordinary skill in the art would have had a reasonable expectation of success applying **Nokia's** teachings to **Lee** because **Nokia's** teachings were designed to be applied to evolving UMTS/nascent LTE technologies, like

Lee's. Nokia, 1 (applying E-DCH to CELL_FACH in "REL8"), 3; Lee, 1:9-15. Additionally, **Lee** and **Nokia** both disclose similar schemes for releasing allocated resources when the transmissions have been completed and the resources are no longer in use. *See* Nokia 1-2, Figs. 1-2 (illustrating that the system will "release resources" at end of an E-DCH transmission phase); Lee, 14:4-12 (UE triggers a "release" when there is "no more data for transmission"). Moreover, **Lee** was published *before* LTE was standardized. A person of ordinary skill in the art therefore would have found it at least obvious to try **Nokia's** proposed improvements to then-existing UMTS signaling mechanisms, as set forth in Release 99 and Release 7 (Nokia, 2-3), because these describe improved techniques for using the existing UMTS infrastructure on which **Lee's** "evolved UMTS"/"LTE" system was based (Lee, 1-9:13). Indeed, as I mention above, the aspects of UMTS and LTE discussed by **Lee** and **Nokia** are similar.

3. TS25.321; Motivation to Modify Lee (and Nokia) with TS25.321's Teachings

154. As discussed above in Section IX.B.1 (Lee), **Lee** discloses an "evolved version of a conventional wireless UMTS system" that entails implementing a HARQ procedure and employing signaling mechanisms to release resources when there is no data left in a UE's transmission buffer. *E.g.*, Lee, 1:9-15, 6:19-8:17, 12:24-15:19, Fig. 6. **TS25.321** provides the UMTS technical specifications for

determining and indicating to a base station when a UE's buffers are empty. TS25.321, 2, 8, 67-68, 99-100.

155. As I discussed in Section IX.A.3 (TS25.321; Motivation to Modify Wager with TS25.321's Teachings), **TS25.321** is directed to a **M**edium **A**ccess **C**ontrol (MAC) protocol, which is the protocol for sending transmissions between devices in a UMTS network, such as a user equipment ("UE") and its serving base station ("[serving] Node-B"). TS25.321, 2, 7-8. In this section, I will provide a succinct summary of **TS25.321's** teachings that are most relevant to Ground 2 of unpatentability. For instance, **TS25.321** discloses that the UE makes a determination regarding how much data is in its E-DCH transmission buffer, and communicates that information to the base station ("serving E_DCH Node-B") by transmitting "Scheduling Information" with a "Total E-DCH Buffer Status" (TEBS) field to indicate "the amount of resources the [UE] require[s]." TS25.321, 67. For example, when the UE determines that its E-DCH buffer is empty, it sets the TEBS field in SI to "0" to indicate there is 0 bytes of data in its E-DCH buffer "available for transmission." TS25.321, 67-68, Table 9.2.5.3.2-1. **TS25.321** discloses that the contents of "Scheduling Information" should "always be updated in new transmissions" so that the Node-B can have a "better view of the amount of system resources needed by the UE and the amount of resources [the UE] can actually make use of." TS25.321, 67. Additionally, as I discussed above in Section IX.A.3

(TS25.321; Motivation to Modify Wager with TS25.321's Teachings), **TS25.321** specifies how to efficiently manage resources that are used to carry out HARQ retransmission communications by providing detailed implementation teachings, such as having a UE flush its HARQ buffer when it receives an "ACK" from the base station indicating successful receipt of prior transmissions such that the UE's HARQ buffer no longer needs to store prior data transmission for retransmissions to the base station. TS25.321, 99-100.

156. Like **Lee** and **Nokia**, **TS25.321** is in the same field as the '809 patent, including wireless communications, and is reasonably pertinent to the alleged problems identified in the '809 patent (including implementing an efficient release of radio resources in a wireless communications system). TS25.321, 8, 67-68, 99-100; *see* Section IX.B.2 (Nokia; Motivation to Modify Lee with Nokia's Teachings). For example, **Lee** is directed to a method in "a mobile communication system," that entails a UE, once it has "complete[d] uplink data transmission," "transmit[ting] a radio resource allocation release request message" "contained in a Protocol Data Unit (PDU) of the MAC layer" to an eNode-B on the uplink before releasing its already-allocated resources. Lee, 8:9, 14:4-6, 15:8-10; *compare with* '809 patent, 1:25-33, 4:7-13 ("The present application is related to wireless communication" in which "WTRU 210 may use these E-DCH resources for UL transmission until it receives a trigger, at which point the WTRU 210 will release the resources 415."),

5:40-42 (a WTRU checks if the "transmit buffer is empty 610 (i.e., the Total E-DCH Buffer Status (TEBS) is equal to zero)), 5:59-61 ("After successfully transmitting the SI and emptying the HARQ buffers 625, the WTRU 210 releases the E-DCH resources 630."). Relatedly, **TS25.321**, which pertains to technical specifications for a "UMTS" wireless network, provides more details regarding the implementation of a HARQ process in a UE: *e.g.*, "[a] number of parallel HARQ processes are used in the UE to support" the "one HARQ entity at the UE," and "[e]ach HARQ process is associated with a physical buffer" that is "flush[ed]." TS25.321, 2, 99-100. Moreover, **TS25.321** provides more details regarding determining and communicating when a UE's data buffers are empty: *e.g.*, communicating to the base station ("serving E_DCH Node-B") in a "Scheduling Information" message by including a "Total E-DCH Buffer Status" (TEBS) field to indicate "the amount of resources the [UE] require[s]," such that the UE sets TEBS=0 when it determines that the E-DCH buffer is empty. TS25.321, 67-68. As I discuss below, a person of ordinary skill in the art would have been motivated to modify **Lee** with **TS25.321's** SI and HARQ buffer teachings, yielding a system in which the UE releases resources after it transmits SI indicating that its E-DCH transmission buffer is empty after determining that it has no new data to transmit and the HARQ buffer is empty.

157. First, a person of ordinary skill in the art would have recognized that **Lee** in view of **Nokia** (as discussed in Section IX.B.2 (Nokia; Motivation to Modify

Lee with Nokia's Teachings) renders obvious a communication system that implements "HARQ" for "CELL_FACH state uplink transmissions" (*e.g.*, Lee, 6:19-7:14, Fig. 5; Nokia, 2), but does not disclose how data associated with HARQ retransmissions are managed in the UE. **TS25.321** provides more details how **Lee's** "evolved version of a conventional UMTS system" (Lee, 1:10-11), which a person of ordinary skill in the art would have understood is compatible with Release 7 (UMTS) technologies, implemented HARQ processes. Thus, a person of ordinary skill in the art would have been motivated to look to a reference directed to UMTS systems, such as **TS25.321**, that provides detailed teachings of implementing HARQ processes, including **TS25.321's** specification for using a HARQ buffer to store data for retransmission if needed to aid the base station in performing error correction of unsuccessfully received prior transmissions, and flushing the buffer after the base station sends an ACK signal acknowledging successful receipt of prior transmissions. TS25.321, 99-100. As discussed in Section IX.A.3 (TS25.321; Motivation to Modify Wager with TS25.321's Teachings), it would have been advantageous to apply these HARQ teachings from **TS25.321** to **Lee** to (1) improve the reliability of **Lee's** resource release scheme, (2) improve its data integrity (by preventing old data that was already transmitted to the base station from being combined with new data that hasn't been transmitted yet), (3) improve memory utilization, and (4) reduce production costs associated with maintaining a larger

buffer in the UE for the same reasons these teachings would have benefitted **Lee's** resource release scheme. *See* Section IX.A.3 (TS25.321; Motivation to Modify Wager with TS25.321's Teachings).

158. Second, **Lee** teaches that the UE releases resources when its "transmission buffer" is empty, and **TS25.321** provides additional teachings of communicating such information to a base station (*e.g.*, by a UE transmitting Scheduling Information with the TEBS field set to 0 when it has determined its E-DCH Buffer is empty). *See* Section IX.B.1 (Lee); TS25.321, 67-68. A person of ordinary skill in the art would have been motivated to modify **Lee** according to **TS25.321's** Scheduling Information teachings so that the base station can receive more prompt and accurate information about the UE's real-time resource needs to enable the base station to more quickly reallocate unused resources to other UEs in need. TS25.321, 67; Lee, 8:13-15. By modifying **Lee's** UE to include an E-DCH buffer to store data transmissions and provide status information about the E-DCH buffer in Scheduling Information through the TEBS field, **Lee's** eNode-B would receive more up-to-date information regarding a UE's resource needs, enabling the base station to make resource allocation decisions with fewer errors and reduced latency, thereby improving the overall utilization of resources in the network. TS25.321, 67 ("UL Scheduling Information" is "control information" "used by UEs to indicate to their serving E-DCH Node-B the amount of resources they require;

"Scheduling Information…is used to provide the serving Node B with a better view of the amount of system resources needed by the UE and the amount of resources it can actually make use of"). Furthermore, a person of ordinary skill in the art would have been motivated to modify **Lee's** resource release system to initiate the release of the UE's resources when the UE's E-DCH buffer (signaled to the base station as TEBS=0 in Scheduling Information) and HARQ buffer is empty as taught by **TS25.321** (TS25.321, 99-100), to improve the accuracy and promptness resource release. By releasing the UE's resources when the E-DCH and HARQ buffers are empty, **Lee's** system ensures that resources are released at the right time, thus reducing "wasted radio resources," as desired by **Lee.** Lee, 8:8-17.

159. Third, a person of ordinary skill in the art would have been further motivated to modify **Lee's** system to trigger **Lee's** UE-initiated release when both the UE's transmission buffer holding new data (E-DCH buffer) and error-correction buffer holding old data (HARQ buffer) are empty, as taught by **TS25.321** (TS25.321, 67-68, 99-100) to improve the accuracy and promptness of resource release. By releasing the UE's resources when the E-DCH and HARQ buffers are empty, **Lee's** system ensures that resources are released at the right time—when the UE no longer has new or old data to transmit and not before—thus reducing "wasted radio resources," as desired by **Lee.** Lee, 8:13-15.

160. A person of ordinary skill in the art would have had a reasonable expectation of success modifying **Lee's** (and Nokia's) teachings with **TS25.321's** teachings because the protocols set forth in **TS25.321** were designed to be standardized across systems employing UMTS technologies, like **Lee's**. Indeed, as I mention above, **Lee** is directed to an "Evolved UMTS" system that was built upon a "conventional UMTS" system, thus was designed specifically according to UMTS protocols, like those specified in **TS25.321**. Lee, 1:9-15; *see* Section IX.B.1 (Lee). Accordingly, a person of ordinary skill in the art would have understood that the UMTS signaling mechanisms set forth in **TS25.321** are compatible with the existing UMTS infrastructure on which **Lee's** "evolved UMTS"/"LTE" system was based (Lee, 1-9:13).

4. Invalidity of Claims 1, 4, 6, 10 Over Lee in View of Nokia and TS25.321

161. As set forth in my analysis below, Lee in view of Nokia and TS25.321 renders obvious Challenged Claims 1, 4, 6, and 10. In addition to Sections IX.B.1 (Lee), IX.B.2 (Nokia; Motivation to Modify Lee with Nokia's Teachings), IX.B.3 (TS25.321; Motivation to modify Lee (and Nokia) with TS25.321's Teachings), I provide the following example disclosures (and bulleted excerpts) that each disclose and/or render obvious this subset of the Challenged Claims.

(a) Element [1.pre]

162. Element [1.pre] recites **"a method performed by a wireless transmit/receive unit (WTRU) to communicate with a base station using an enhanced dedicated channel (E-DCH) resource while in a cell forward access channel (CELL_FACH) state, the method comprising."** This element is met by **Lee** in view of **Nokia**.

163. **Lee discloses a method performed by a wireless transmit/receive unit (WTRU) to communicate with a base station using a resource** (*e.g.*, UE "perform[ing] transmission/reception of data" to/from an "eNode-B" using "allocated radio resources")**.**

164. **Nokia discloses a WTRU that communicates with a base station using an enhanced dedicated channel (E-DCH) resource while in a cell forward access channel (CELL_FACH) state** (*e.g.*, UE "appl[ies] E-DCH channels…for uplink transmissions" to the "Node B" while "in [a] CELL_FACH" state)**.**

165. **Lee** discloses "a method" in which two devices, *i.e.*, a "specific User Equipment (UE)" and "eNode-B," communicate wirelessly by "perform[ing] transmission/reception of data" using "radio resources allocated by the eNode-B." Lee, Abstract, 12:22-23, 13:10-13. A "specific…UE[]" is a wireless transmit/receive unit because it wirelessly performs "transmission/reception of data." Lee, 12:22-23, 13:15-23. A "eNode-B" is an LTE base station that

communicates with the UE, for example, by receiving data from the UE. Such communications are called uplink transmissions or uplink communications because they are sent in the uplink direction (from the UE to the eNode-B). The eNode-B assigns radio resources to a UE, which the UE uses to communicate with the eNode-B. Lee, 13:10-11, 13:15-17.

166. Whereas **Lee** discloses that a UE communicates with an eNode-B in the uplink direction, it is silent on how UEs perform these uplink transmissions in the particular scenario when UEs are operating in a CELL_FACH state. **Nokia** proposes an improvement to uplink transmissions carried out by "UEs in [a] CELL_FACH state" by granting UEs access to "E-DCH channels" for those transmissions. Nokia, 1-3. Specifically, **Nokia** proposes "apply[ing] E-DCH channels for an enhanced CELL_FACH for uplink transmissions" from "the UE to the network." Nokia, 1-3. Because **Nokia** discloses that the UE sends uplink transmissions to a "Node B" (which is a particular implementation of a base station in 3G), the UE communicates with a base station. Nokia, 1, 3. Moreover, a person of ordinary skill in the art would have understood that transmissions on "E-DCH channel" are carried out by using E-DCH resources. Nokia, 1-2. Thus, the UE uses E-DCH resources while in a CELL_FACH state by sending uplink transmissions to the base station on the E-DCH channel.

167. For at least the reasons I discuss in Sections IX.B.2 (Nokia; Motivation to Modify Lee with Nokia's Teachings) and IX.A.3 (TS25.321; Motivation to Modify Lee (and Nokia) with TS25.321's Teachings), a person of ordinary skill in the art would have been motivated to modify **Lee** with **Nokia's** teachings, yielding a system in which Lee's UE communicates with a base station by using E-DCH resources to send uplink transmissions on an E-DCH channel while operating in a CELL_FACH state. Nokia, 1-2; Lee, 1:5-6.

168. *See, e.g.*, **Lee** (emphasis added):

- **Lee Fig. 1:**

FIG. 1

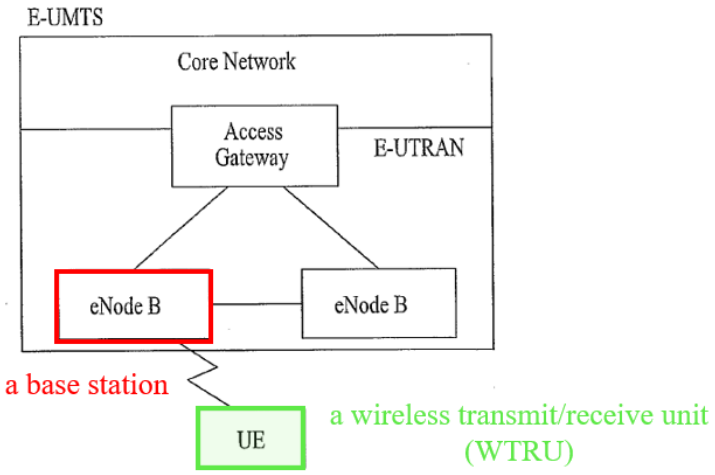

- **Lee Fig. 6:**

FIG. 6

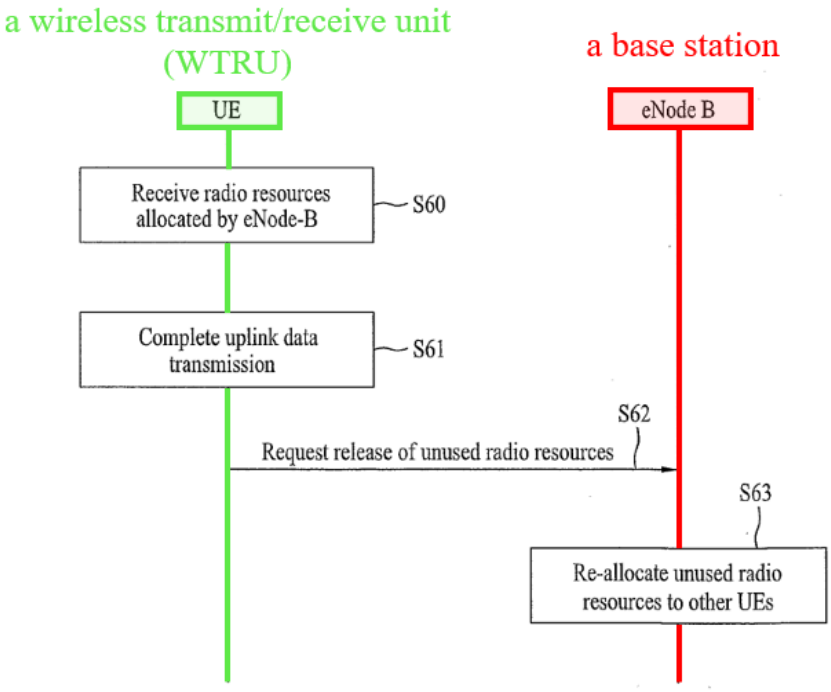

- **Lee Abstract** ("***A method for scheduling radio resources in a mobile communication system is disclosed. The method includes allocating radio resources to a specific User Equipment (UE)***, receiving a release request message of the allocated radio resources 0 from the specific UE and re-allocating unused radio resources to other UEs other than the specific UE. The method according to the present invention can re-allocate unused radio resources to other UEs using a control signal received from a specific UE such that wasted radio resources are minimized and efficiency of data communication in a mobile communication system may be enhanced.")

- **Lee 12:22-23** ("***The UE or the eNode-B can perform transmission/reception of data using the allocated RBs.***")

- **Lee 13:10-13** ("***Each UE receives uplink radio resources allocated by the eNode-B*** (step S60). ***Each UE completes uplink data transmission using the allocated radio resources*** in an uplink transmission path in which the UE is a transmitter (Step S61)."

- ***See also*** **Lee**, Fig. 7, 1:5-6, 1:12-15, 1:20-24, 1:25-2:5, 2:12-14, 3:19-21, 3:19-21, 4:3-5; 8:8-17, 8:24-9:2; 9:8-12, 9:18-22, 10:2-8, 10:14-17, 10:18-23, 12:12-16, 12:17-21, 13:4-5, 13:18-23, 15:8-12, 15:21-24; 16:11-16.

169. *See, e.g.*, **Nokia** (emphasis added):

- **Nokia Fig. 1**

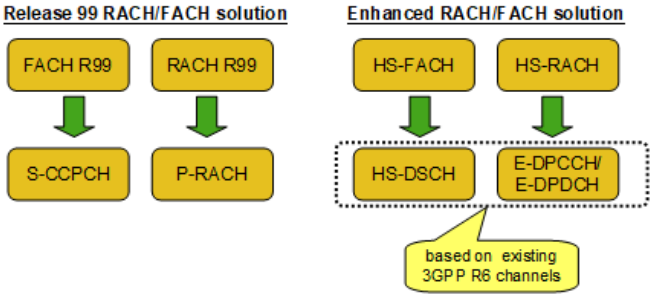

Figure 1: An illustration of data transmission in Rel'99 and Rel-8 CELL_FACH states

- **Nokia 2** (figure)

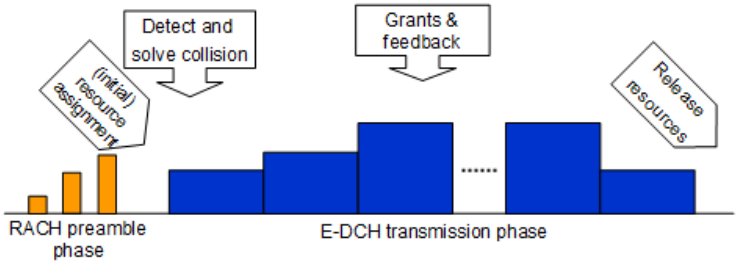

- **Nokia 1** (“***This document analyses the current state of uplink data transmissions in CELL_FACH***, CELL_PCH and URA_PCH and outlines a proposal for a way forward for improved UL for CELL_FACH state allowing a direct UE access to both HSDPA and HSUPA ***by combining the random access procedure with the E-DCH concept***.”)

- **Nokia 2** (“Rel-7 Enhanced CELL_FACH achieved reduced RRC signalling delays and higher bit rates by utilizing HS-DSCH for downlink transmission. ***A natural complement of enhanced CELL_FACH is to apply E-DCH channels for an enhanced CELL_FACH for uplink transmissions***…”)

- **Nokia 2-3** (“***Using EDCH principles for data transmission*** for extending the random access procedure allows…

- ***EDCH resource coordination for dedicated and common users can be co-ordinated within the Node B***[.]")

(b) Element [1.a]

170. Element [1.a] recites **"determining if a E-DCH buffer is empty."** This element is met by **Lee** in view of **TS25.321**.

171. **Lee discloses determining if a transmission buffer is empty** (*e.g.*, determining "there is no more data for transmission left in the buffer of the…UE")**.**

172. **TS25.321 discloses determining if an E-DCH buffer is empty** (*e.g.*, UE setting "TEBS" to 0 after determining that its E-DCH Buffer is empty)**.**

173. **Lee** discloses that the UE sends a "radio resource allocation release request message" that "employ[s] a 1-bit indicator" to "indicate" whether there is any data remaining in its buffer. Lee, 14: 4-12. For example, the UE sets the 1-bit indicator to 0 if "there is no more data for transmission left in the buffer of the specific UE." *Id.* A person of ordinary skill in the art would have understood that a transmission buffer stores "data for transmission"—and nothing else—so that when the buffer does not store any transmission data, it is indeed empty. Thus, a person of ordinary skill in the art would have understood that the UE determines that the transmission buffer is empty by setting the 1-bit indicator to 0 because the buffer has no more data left to transmit.

174. Whereas **Lee** discloses determining a UE's transmission buffer is empty, when **Nokia's** teachings (*see* [1.pre]) and **TS25.321's** teachings of using E-DCH resources to carry out uplink transmissions are applied to **Lee** as discussed in Sections IX.B.2 (Nokia; Motivation to Modify Lee with Nokia's Teachings) and IX.B.3 (TS25.321; Motivation to Modify Lee (and Nokia) with TS25.321's Teachings), a person of ordinary skill in the art would have found obvious the resulting system determining if an "E-DCH buffer" is empty because the data for uplink transmissions using E-DCH resources is stored in the E-DCH transmission buffer. Nokia, 1-3, TS25.321, 67-68. This is at least because **TS25.321** discloses that a UE updates a "Total E-DCH Buffer Status" ("TEBS") field to indicate the status of an E-DCH Buffer, so that when "the amount of data … that is available for transmission and retransmission" is "0" bytes, TEBS field is set to 0 ("TEBS=0"). TS25.321, 67-68. A person of ordinary skill in the art would have understood that in order to set TEBS equal to 0, the UE makes a determination that the E-DCH buffer is empty.

175. As discussed in Section IX.B.3 (TS25.321; Motivation to Modify Lee (and Nokia) with TS25.321's Teachings), a person of ordinary skill in the art would have been motivated to modify **Lee's** system (in view of **Nokia**, *see* [1.pre]) that determines if a UE's transmission buffer is empty with **TS25.321's** E-DCH buffer

teachings to yield a system where the UE stores data for uplink transmissions using E-DCH resources in an E-DCH buffer and determines that the E-DCH buffer is empty when there is no data left to transmit, thereby setting TEBS equal to 0.

176. *See, e.g.,* **Lee** (emphasis added):

- **Lee 14:4-12** ("For example, the above-mentioned radio resource allocation release request message may be contained in a Protocol Data Unit (PDU) of the MAC layer (hereinafter referred to as a "MAC PDU") and transmitted to the eNode-B. ***The radio resource allocation release request message may employ a 1-bit indicator*** if the radio resource allocation release request message is contained in the MAC PDU such that the MAC PDU including the radio resource allocation release request message is transmitted to a destination**.**

  The 1-bit indicator is set to '1' to indicate that data for transmission for an uplink remains in a buffer of the specific UE. ***The 1-bit indicator is set to '0' to indicate that there is no more data for transmission left in the buffer of the specific UE.***")

- ***See also*** **Lee**, 8:18-23, 9:3-7, 9:9-12, 9:13-14, 13:18-23, 14:10-12, 14:13-16, 15:4-7, 16:7-10, Figs. 6, 7.

177. *See, e.g.,* **TS25.321** (emphasis added):

- **TS25.321 67** ("9.2.5.3 UL Scheduling information
  This control information is used by UEs to indicate to their serving E-DCH Node-B the amount of resources they require.")

- **TS25.321 67** ("9.2.5.3.2 Scheduling Information
  The Scheduling Information is located at the end of the MAC-e PDU and ***is used to provide the serving Node B with a better view of the amount of system resources needed by the UE and the amount of resources it can actually make use of***. The transmission of this information will be initiated due to the quantization of the transport block sizes that can be supported or based on the triggers defined in subclause 11.8.1.6. When a Scheduling Information is transmitted, its contents shall always be updated in new

transmissions with the buffer status after application of the E-TFC selection procedure described in subclause 11.8.1.4. The logical channels for which a non-scheduled grant is configured shall never be taken into account when putting together this information. In addition, the RRC may restrict applicability for logical channels for which no non-scheduled grant was configured.

This information includes the following fields:

- Highest priority Logical channel ID (HLID):

The HLID field identifies unambiguously the highest priority logical channel with available data. If multiple logical channels exist with the highest priority, the one corresponding to the highest buffer occupancy will be reported. The length of the HLID is 4 bits. In case the TEBS is indicating index 0 (0 byte), the HLID shall indicate the value "0000".

- Fields related to amount of available data:

- Total E-DCH Buffer Status (TEBS):

The TEBS field identifies the total amount of data available across all logical channels for which reporting has been requested by the RRC and indicates the amount of data in number of bytes that is available for transmission and retransmission in RLC layer. When MAC is connected to an AM RLC entity, control PDUs to be transmitted and RLC PDUs outside the RLC Tx window shall also be included in the TEBS. RLC PDUs that have been transmitted but not negatively acknowledged by the peer entity shall not be included in the TEBS.”)

- **TS25.321 68** (“The values taken by TEBS are shown in Table 9.2.5.3.2.1.)

- **TS25.321 Table 9.2.5.3.2-1 (Partially Reproduced)**:

Table 9.2.5.3.2-1: TEBS Values

Index	TEBS Value (bytes)
0	TEBS = 0
1	0 < TEBS ≤ 10
2	10 < TEBS ≤ 14
3	14 < TEBS ≤ 18
4	18 < TEBS ≤ 24
5	24 < TEBS ≤ 32

(c) Element [1.b]

178. Element [1.b] recites **"transmitting to the base station scheduling information (SI), wherein the SI includes a total E-DCH buffer status (TEBS) equal to zero when the E-DCH buffer is determined to be empty."** This element is met by **Lee** in view of **TS25.321**.

179. **Lee discloses transmitting to the base station information when the transmission buffer is determined to be empty** (e.g., transmits "radio resource allocation release request message" with "indicator that is set to 0" when "there is no more data for transmission left in [its] buffer").

180. **TS25.321 discloses transmitting to the base station scheduling information (SI)** (*e.g.*, UE transmitting to its "serving Node-B" "Scheduling Information")**, wherein the SI includes a total E-DCH buffer status (TEBS) equal to zero when the E-DCH buffer is determined to be empty** (*e.g.*,

"Scheduling Information" specifies "TEBS" set to "0" when the UE has determined its E-DCH buffer is empty (*see* [1.a])**).**

181. **Lee** discloses that the UE transmits a "radio resource allocation release request message" to the "eNode-B" (base station) with an "indicator" that is set to 0 when the UE has determined that its buffer is empty, which occurs when "there is no more data for transmission left in [its] buffer" (*see* [1.b]). Lee, 14:6-12; 16:7-10. This resource release request is transmitted to the eNode-B in a "MAC PDU," which is a "Protocol Data Unit (PDU) of the MAC layer." *Id.* A person of ordinary skill in the art would have understood that the MAC (**M**edia **A**ccess **C**ontrol) layer supports layer 2 protocol used to transmit PDUs between a UE and a base station.

182. Like **Lee, TS25.321** also discloses signaling, in a MAC PDU, that a transmission buffer is empty, but provides more details regarding how to track and communicate whether an E-DCH buffer (which is a particular type of transmission buffer) is empty. For example, **TS25.321** discloses that a UE transmits information to the base station regarding "the amount of resources [it] requires." TS25.321, 67. For example, the UE transmits "Scheduling Information" (SI) "at the end of the MAC-e PDU," which includes "[f]ields related to amount of available data," such as "Total E-DCH Buffer Status (TEBS)," which "identifies the total amount of data available across all logical channels for which reporting has been requested by the RRC and indicates the amount of data in number of bytes that is available for

transmission and retransmission in RLC layer." TS25.321, 67. Thus, by setting "TEBS=0," the UE has determined that there is no data (*i.e.*, 0 bytes) available for transmission in the E-DCH buffer—i.e., the E-DCH buffer is empty (*see* [1.a]). TS25.321, 67-68. By signaling to the base station that a UE's E-DCH buffer is empty, the UE is indicating it no longer requires any resources because it does not have to carry out any transmissions.

183. As I discussed in Section IX.B.3 (TS25.321; Motivation to Modify Lee (and Nokia) with TS25.321's Teachings), a person of ordinary skill in the art would have been motivated to modify **Lee** with **TS25.321's** Scheduling Information teachings such that **Lee's** UE transmits a "radio resource allocation release request message" to the base station containing Scheduling Information with the TEBS field set to 0 when the E-DCH buffer is determined by the UE to be empty.

184. *See, e.g.*, **Lee** (emphasis added):

- **Lee 14:4-12** ("For example, the above-mentioned radio resource allocation release request message may be contained in a Protocol Data Unit (PDU) of the MAC layer (hereinafter referred to as a "MAC PDU") and transmitted to the eNode-B. ***The radio resource allocation release request message may employ a 1-bit indicator if the radio resource allocation release request message is contained in the MAC PDU such that the MAC PDU including the radio resource allocation release request message is transmitted to a destination.***

  The 1-bit indicator is set to '1' to indicate that data for transmission for an uplink remains in a buffer of the specific UE. ***The 1-bit indicator is set to '0' to indicate that there is no more data for transmission left in the buffer of the specific UE.***")

- **Lee 16:7-10** ("***Setting the 1-bit indicator to '0' indicates that there is no more data for transmission left in the buffer of the UE***. In this way, the UE can inform the eNode-B of information regarding the state of the buffer.")

185. *See, e.g.,* **TS25.321** (emphasis added):

- **TS25.321 67** ("9.2.5.3 UL Scheduling information
This control information is used by UEs to indicate to their serving E-DCH Node-B the amount of resources they require.")

- **TS25.321 67** ("9.2.5.3.2 Scheduling Information
The Scheduling Information is located at the end of the MAC-e PDU and ***is used to provide the serving Node B with a better view of the amount of system resources needed by the UE and the amount of resources it can actually make use of***. The transmission of this information will be initiated due to the quantization of the transport block sizes that can be supported or based on the triggers defined in subclause 11.8.1.6. When a Scheduling Information is transmitted, its contents shall always be updated in new transmissions with the buffer status after application of the E-TFC selection procedure described in subclause 11.8.1.4. The logical channels for which a non-scheduled grant is configured shall never be taken into account when putting together this information. In addition, the RRC may restrict applicability for logical channels for which no non-scheduled grant was configured.

  This information includes the following fields:

  - Highest priority Logical channel ID (HLID):

  The HLID field identifies unambiguously the highest priority logical channel with available data. If multiple logical channels exist with the highest priority, the one corresponding to the highest buffer occupancy will be reported. The length of the HLID is 4 bits. In case the TEBS is indicating index 0 (0 byte), the HLID shall indicate the value "0000".

  - Fields related to amount of available data:

  - Total E-DCH Buffer Status (TEBS):

The TEBS field identifies the total amount of data available across all logical channels for which reporting has been requested by the RRC and indicates the amount of data in number of bytes that is available for transmission and retransmission in RLC layer. When MAC is connected to an AM RLC entity, control PDUs to be transmitted and RLC PDUs outside the RLC Tx window shall also be included in the TEBS. RLC PDUs that

have been transmitted but not negatively acknowledged by the peer entity shall not be included in the TEBS.")

- **TS25.321 68** (Table 9.2.5.3.2-1)

Table 9.2.5.3.2-1: TEBS Values

Index	TEBS Value (bytes)
0	TEBS = 0
1	0 < TEBS ≤ 10
2	10 < TEBS ≤ 14
3	14 < TEBS ≤ 18
4	18 < TEBS ≤ 24
5	24 < TEBS ≤ 32

(d) Element [1.c]

186. **Element [1.c]** recites **"determining if a hybrid automatic repeat request (HARQ) buffer is empty."** This element is met by **Lee** in view of **Nokia** and **TS25.321**.

187. **Lee discloses using a hybrid automatic repeat request (HARQ) scheme to perform downlink transmissions** (*e.g.*, "implementing HARQ in the downlink physical layer").

188. **Nokia discloses using HARQ to perform uplink transmissions** (*e.g.*, "provide HARQ…for the CELL_FACH state uplink transmissions").

189. **TS25.321 discloses determining if a HARQ buffer is empty** (*e.g.*, UE "flush[es] the HARQ buffer"). *See* TS25.321 disclosures from Ground 1 (in Section IX.A.4) regarding Element [1.c].

190. As discussed above, **Lee** explicitly discusses implementing a conventional HARQ scheme for downlink transmissions but is silent on whether HARQ is used on the uplink. Specifically, **Lee** discloses implementing a "conventional hybrid ARQ (HARQ) scheme" in "the downlink physical layer of a radio packet communication system," as illustrated in Figure 5. Lee, 6:19-21, 11:25, Fig. 5. For example, **Lee's** Fig. 5 depicts a HARQ process for the downlink, that entails a UE: (1) sending a NACK to the base station whenever it was not able to properly receive a transmission from the base station prompting the base station to resend that transmission; and (2) sending a ACK to the base station whenever it has properly received a transmission from the base station, which prompts the base station to proceed sending other transmissions. Lee, Fig. 5, 6:19-7:14. **Lee** also discloses that "uplink data transmission[s]," which include HARQ retransmissions, are completed by "[e]ach UE," which indicates that the UE's transmissions were successfully received. Lee, 13:9-13. Accordingly, a person of ordinary skill in the art would have understood **Lee** to render obvious a HARQ process that entails a base station: (1) sending a NACK to the UE whenever it was not able to properly receive

a transmission from the UE prompting the UE to resend that transmission; and (2) sending a ACK to the UE whenever it has properly received a transmission from the UE, which prompts the UE to proceed sending other transmissions. Thus, a person of ordinary skill in the art would have understood that **Lee** performs HARQ, for error correction and control, for both downlink and uplink transmissions. Indeed, **Lee** describes an "evolved version of a conventional UMTS system" (Lee, 1:10-11)), which a person of ordinary skill in the art would have understood to use HARQ in both the downlink and uplink directions.

191. **Nokia** discloses "provid[ing] HARQ and power control for the CELL_FACH state uplink transmissions" to support the UE's use of "E-DCH channels" to perform uplink transmissions, such as those disclosed in **Lee** (Lee, 13:9-13). Nokia, 2.

192. As I discussed in Section IX.B.3 (TS25.321; Motivation to Modify Lee (and Nokia) with TS25.321's Teachings), a person of ordinary skill in the art would have been motivated to modify **Lee** with **Nokia's** HARQ teachings, yielding a system that uses HARQ to perform error correction and control for both downlink and uplink transmissions—such that a UE notifies a base station whenever it was not able to properly receive a transmission (prompting the base station to resend the original transmission) **and** a base station notifies a UE whenever it was not able to properly receive a transmission (prompting the UE to resend the original

transmission)—thus improving the reliability of uplink transmissions made by the UE while in a CELL_FACH state, because a person of ordinary skill in the art would have understood that HARQ procedures are conventionally carried out bi-directionally. Nokia, 2 (allowing for the use of E-DCH transmissions while a UE is in a CELL_FACH state, including with the use of HARQ to improve reliability, "enabl[es] significantly larger data amounts to be delivered in CELL_FACH state with high reliability from the UE to the network").

193. Whereas **Lee** in view of **Nokia** renders obvious the use of HARQ for downlink and uplink transmissions, **TS25.321** provides more detailed teachings for implementing HARQ in a UE. **TS25.321** teaches that a UE has a HARQ buffer that it uses to implement a HARQ procedure. TS25.321, 99-100. **TS25.321** teaches that if the UE receives an "ACK signal" to the UE (indicating the "successful…reception of previous transmissions"), the UE "flush[es]" its "HARQ buffer." TS25.231, 99-100. Thus, as I discussed in connection with element [1.c] in Section IX.A.4 (Ground 1), a person of ordinary skill in the art would have understood, or at minimum found it obvious, that **TS25.321** discloses that the UE's flushing of the HARQ buffer empties the HARQ buffer, which implies that the UE determines that the HARQ buffer is empty, so that the UE can keep an accurate record of the status of the HARQ buffer for further transmissions. TS25.321, 99-100; *see* discussion of TS25.321 in [1.c] of Section IX.A.4.

194. As I discussed in Section IX.B.3 (TS25.321; Motivation to Modify Lee (and Nokia) with TS25.321's Teachings), a person of ordinary skill in the art would have been motivated to modify **Lee** (in view of **Nokia**) with **TS25.321's** HARQ buffer teachings, yielding a system in which the UE determines if a HARQ buffer is empty once it flushes its HARQ buffer after it receives an ACK from the base station.

195. *See, e.g.,* **Lee** (emphasis added):

- **Lee Figure 5**

FIG. 5

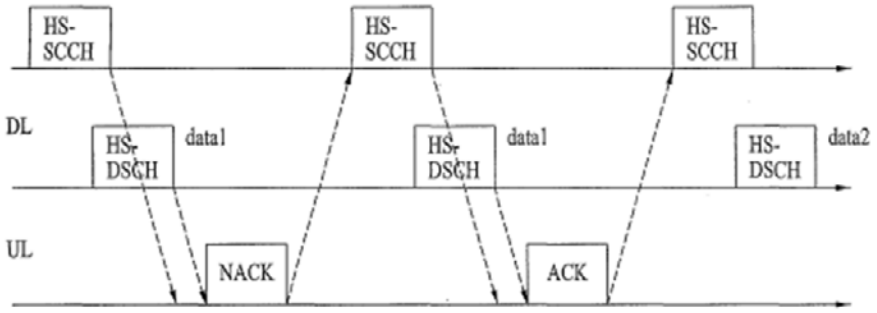

- **Lee Figure 6**

FIG. 6

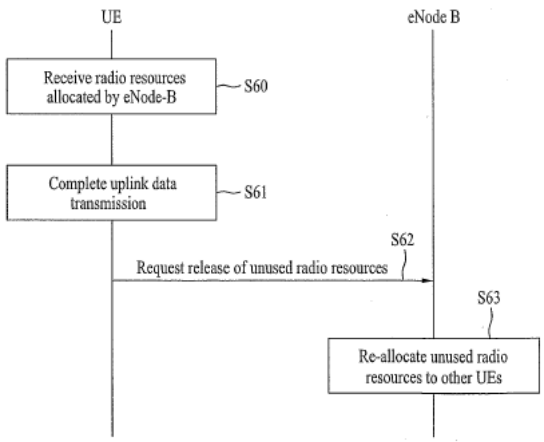

- **Lee 6:19-21** ("FIG. 5 is a conceptual diagram illustrating a ***hybrid ARQ (HARQ) scheme***. A method for implementing HARQ in the downlink physical layer of a radio packet communication system will be described with reference to FIG. 5.")

- **Lee 11:25** ("FIG. 5 is a ***conceptual diagram illustrating a conventional hybrid ARQ (HARQ) scheme***.")

- **Lee 13:12-13** ("***Each UE completes uplink data transmission*** using the allocated radio resources in an uplink transmission path in which the UE is a transmitter (Step S61)")

196. *See, e.g.,* **Nokia** (emphasis added):

- **Nokia 2** ("A natural complement of enhanced CELL_FACH is to apply E-DCH channels for an enhanced CELL_FACH for uplink transmissions. ***This would provide HARQ and power control for the CELL_FACH state uplink transmissions*** enabling significantly larger data amounts to be delivered in CELL_FACH state with high reliability from the UE to the network.")

(e) Element [1.d]

197. Element [1.d] recites **"releasing the E-DCH resource when the transmission of the SI with the TEBS equal to zero has been made and the HARQ buffer is empty."** This element is met by **Lee** in view of **Nokia** and **TS25.321**.

198. **Lee discloses releasing a resource when the transmission of information that the transmission buffer is empty has been made** (*e.g.*, "radio resources released by a specific UE" when UE transmits a "radio resource allocation release request" that "indicate[s] that there is no more data for transmission left in the [UE's] buffer," *see* [1.b]).

199. **As discussed in [1.pre], Lee in view of Nokia renders obvious using an E-DCH resource** (*e.g., see* [1.pre]). See my discussion for element [1.pre] above.

200. **TS25.321 discloses that the transmission of the SI with TEBS equal to zero has been made and determining that the HARQ buffer is empty** (*e.g.*, UE has transmitted "Scheduling Information" to "serving Node-B" with "TEBS" set to "0" (*see* [1.b]), and determined that the UE's HARQ buffer is empty (*see* [1.b]-[1.c])). See my discussions for elements [1.b]-[1.c].

201. **Lee** further discloses a UE-initiated resource release process that reduces the "amount of wasted radio resources." Lee, 8:14-15. In particular, **Lee**

discloses that when "there is no more data for transmission left in the buffer of the specific UE," the UE transmits to the eNode-B base station a "radio resource allocation release request" setting a 1-bit indicator to 0. *See, e.g.*, Lee, Fig. 6, 14:4-12, 13:9-23, 15:8-12. This request message informs the eNode-B that the UE will no longer use its allocated resources and is releasing those resources. As **TS25.321** explains, "[t]he eNode-B recognizes the presence of unused radio resources when it receives the radio resource allocation release request message" sent by the UE and then "re-allocates the unused radio resources, such as radio resources released by a specific UE, to other UEs." *See* [1.a]; Lee, 15:8-12, Fig. 6.

202. As discussed in connection with element [1.pre], **Nokia** discloses assigning E-DCH resources to a UE ("UL resource allocation"), which the UE can use to carry out uplink data transmissions. *See* [1.pre]; Nokia, 1-2.

203. As I discussed above, **Lee** discloses a UE-initiated resource release scheme whereby a UE informs the base station that the UE is no longer using its resources and thus releases them when the UE determines that there is no more data left for transmission in its buffer (*see* [1.a]). **Nokia** teaches that the UE in CELL_FACH uses E-DCH resources (*see* [1.pre]). As I explained in connection with elements [1.b]-[1.c], **TS25.321** provides additional teachings of determining and communicating when resources are no longer needed for transmission (on E-DCH) or retransmission (as part of a HARQ procedure), which is done by setting

the TEBS field in the Scheduling Information (SI) equal to zero and transmitting the SI to the base station to indicate that a UE's E-DCH buffer is empty, and flushing the UE's HARQ buffer when it receives an ACK from the base station indicating that the UE's prior transmissions were successfully received and do not need to be retransmitted.

204. As I discussed in Section IX.B.3 (TS25.321; Motivation to Modify Lee (and Nokia) with TS25.321's Teachings), a person of ordinary skill in the art would have been motivated to modify **Lee** (in view of **Nokia**) with **TS25.321's** detailed protocol teachings, yielding a system that advantageously improves the reliability, data integrity, efficiency and UE memory utilization, as well as reduces UE production costs, of **Lee's** resource release scheme by releasing E-DCH resources when the UE determines that it no longer needs E-DCH resources for further data transmissions or retransmissions, which occurs when a UE's E-DCH buffer is empty (indicated by setting TEBS equal to 0 in the UE's transmission of Scheduling Information) and HARQ buffer is empty (indicating that no further retransmissions as part of a HARQ procedure are needed). Lee, 8:8-17, 13:18-23, 14:4-9, 14:13-16, 15:8-12; TS25.321, 67-68, 99-100; *see* [1.b], [1.c].

205. *See, e.g.,* **Lee** (emphasis added):

- **Lee Fig. 6**

FIG. 6

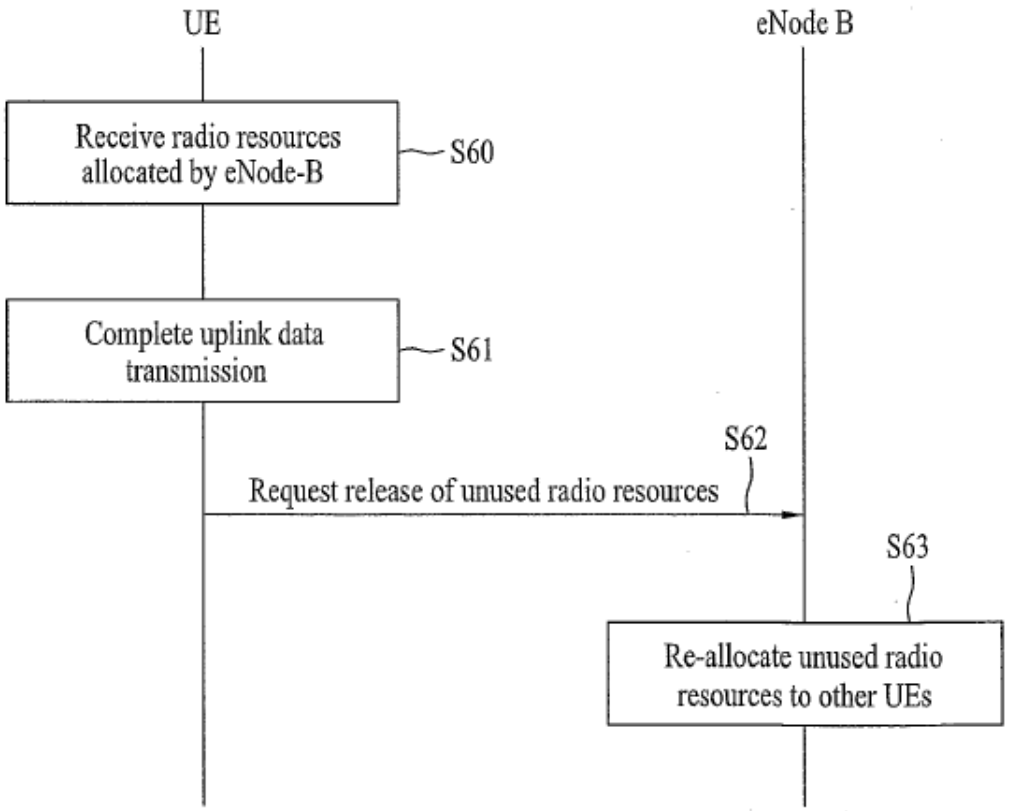

- **Lee Abstract** ("A method for scheduling radio resources in a mobile communication system is disclosed. The method includes allocating radio resources to a specific User Equipment (UE), receiving a release request message of the allocated radio resources 0 from the specific UE and re-allocating unused radio resources to other UEs other than the specific UE. The method according to the present invention can re-allocate unused radio resources to other UEs using a control signal received from a specific UE such that wasted radio resources are minimized and efficiency of data communication in a mobile communication system may be enhanced.")

- **Lee 13:9-11** ("The UE radio resource request process is executed according to RACH, CQI, ACK/NACK and data types of a second layer. Each UE receives uplink radio resources allocated by the eNode-B (step S60).").

- **Lee 13:18-23** ("***The specific UE transmits a message including a specific information to the eNode-B*** in ***order to inform the eNode-B*** of remaining radio resources (step S62) ***if there are remaining radio resources after the specific UE completes uplink data transmission***. Preferably, the specific information is included in a "Request for de-allocation of the allocated uplink radio resource" message, hereinafter referred to as ***a "radio resource allocation release request message," for requesting the eNode-B to release the allocated radio resources***.")

- **Lee 14:4-12** ("For example, the above-mentioned radio resource allocation release request message may be contained in a Protocol Data Unit (PDU) of the MAC layer (hereinafter referred to as a "MAC PDU") and transmitted to the eNode-B. ***The radio resource allocation release request message may employ a 1-bit indicator*** if the radio resource allocation release request message is contained in the MAC PDU such that the MAC PDU including the radio resource allocation release request message is transmitted to a destination**.**

  The 1-bit indicator is set to '1' to indicate that data for transmission for an uplink remains in a buffer of the specific UE. ***The 1-bit indicator is set to '0' to indicate that there is no more data for transmission left in the buffer of the specific UE.***")

- **Lee 15:9-13** ("***The eNode-B recognizes the presence of unused radio resources when it receives the radio resource allocation release request message***. The eNode-B then re-allocates the unused radio resources, such as ***radio resources released by a specific UE***, to other UEs (step S63).

  The eNode-B may re-allocate the unused radio resources to the specific UE.")

- *See also* **Lee, 6:19-21, 9:3-7, 13:12-14, 14:20-22, 14:13-14, 14:20-24, 15:9-10, 16:3-10, 16:17-19.**

- *See* my discussions for elements [1.a]-[1.b].

206. *See, e.g.,* **Nokia** (emphasis added):

- **Nokia 2** (figure)

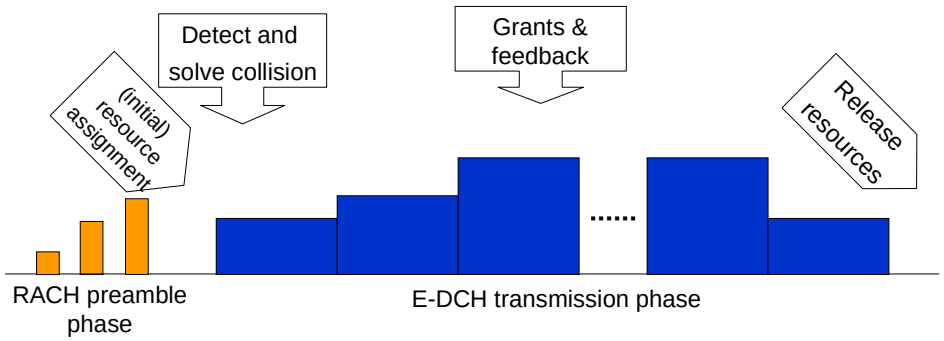

- **Nokia 1** ("This document analyses the current state of uplink data transmissions in CELL_FACH, CELL_PCH and URA_PCH and outlines a proposal for a way forward for improved UL for CELL_FACH state allowing a direct UE access to both HSDPA and HSUPA by combining the random access procedure with the E-DCH concept.")

- **Nokia 2** ("Rel-7 Enhanced CELL_FACH achieved reduced RRC signalling delays and higher bit rates by utilizing HS-DSCH for downlink transmission. A natural complement of enhanced CELL_FACH is to apply E-DCH channels for an enhanced CELL_FACH for uplink transmissions. This would provide HARQ and power control for the CELL_FACH state uplink transmissions enabling significantly larger data amounts to be delivered in CELL_FACH state with high reliability from the UE to the network.")

- **Nokia 2-3** ("Using EDCH principles for data transmission for extending the random access procedure allows
    - UL interference reduction by fast power control,
    - fast retransmission by exploiting the HARQ functionality,
    - fast and dynamic UL resource allocation using scheduling grants, thus
    - allowing variable and in comparison to REL99 RACH higher data rates
    - EDCH resource co-ordination for dedicated and common users can be co-ordinated within the Node B

- HSDPA feedback (ACK/NACK and CQI) for the enhanced CELL_FACH feature becomes possible, if the EDCH resources are allocated to a UE for several 10ms to several 100 ms.")

- *See* my discussions for elements [1.pre].

207. *See, e.g.,* **TS25.321** (emphasis added):

- See my discussions for elements [1.b]-[1.c].

(f) Claim 4

208. Claim 4 recites **"The method as in claim 1, further comprising transmitting using the E-DCH resource when a response is received on an E-DCH acquisition indication channel (E-AICH) to a preamble transmitted by the WTRU."** This claim is met by **Lee** in view of **Nokia**.

209. **Nokia further discloses transmitting using the E-DCH resource** (*see* [1.pre]; UE "deliver[ing]" message "payload" using "E-DCH channels") **when a response is received on an E-DCH acquisition indication channel (E-AICH) to a preamble transmitted by the WTRU** (*see* [1.pre]; *e.g.*, UE receives an "acquisition indication" on an AICH channel "grant[ing] … access to E-DCH channels" in response to a "PRACH preamble" transmitted by a UE").

210. In addition to **Lee's** teachings (in view of **Nokia**) of using "E-DCH channels" for uplink transmissions (*see* [1.pre]), **Nokia** discloses that before a UE can use them, it needs to be granted "uplink access" to the "E-DCH channels."

Nokia, 2. **Nokia** teaches that "uplink access can be initiated" to "E-DCH channels" by performing a "PRACH preamble/AICH acknowledgement procedure." *Id*. This procedure entails a PRACH preamble phase followed by an AICH acknowledgement phase. First, the UE transmits PRACH preambles to a "Node B," which a person of ordinary skill in the art would have understood entails having each sent with an incrementally larger transmission power until a PRACH preamble is finally received properly by the "Node B." Nokia, 1-2. Second, in response, the Node B performs an AICH acknowledge procedure which entails sending "an acquisition indication" on an **a**cquisition **i**ndication **ch**annel (AICH) to the UE containing "UL resource allocation," which informs the UE which uplink resource it has been allocated. *Id.* By being allocated a resource, the UE is "grant[ed]" "direct access to E-DCH channels for payload delivery." Nokia, 1-2. Because the AICH is used to carry information regarding E-DCH resource allocations to the UE (Nokia, 2), **Nokia's** AICH is specifically an E-DCH AICH or "E-AICH" (as recited in claim 4). As a result of the "PRACH preamble/AICH acknowledgement procedure" procedure, the UE is able transmit on the E-DCH channel using its allocated E-DCH resources. Nokia, 1-2.

211. As discussed in Sections IX.B.2 (Nokia; Motivation to Modify Lee with Nokia's Teachings) and IX.B.3 (TS25.321; Motivation to Modify Lee (and Nokia)

with TS25.321's Teachings), a person of ordinary skill in the art would have been motivated to modify **Lee** (in view of TS25.321) with **Nokia's** teachings of a "PRACH preamble/AICH acknowledgement procedure," yielding a system in which the UE sends transmissions on the E-DCH channel (*e.g.*, *see* [1.pre]) using the E-DCH resources granted by the Node-B through the E-AICH (*e.g.*, containing uplink resource allocation) in response to a PRACH preamble transmitted by the UE.

212. *See, e.g.*, **Nokia** (emphasis added):

- **Nokia 2** (annotated figure below)

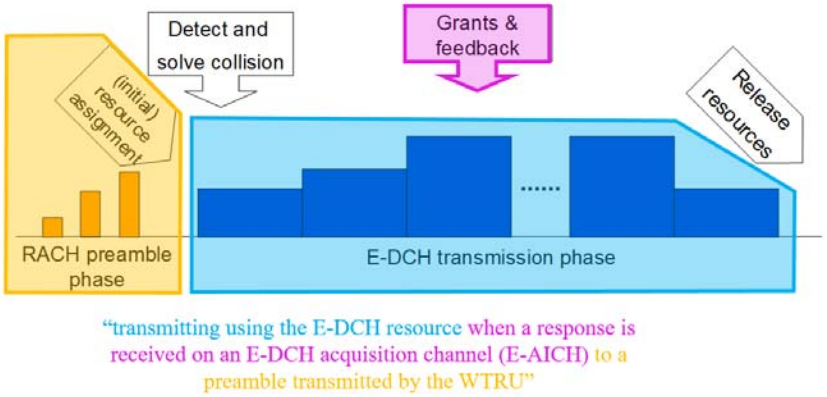

- **Nokia 1** ("This document analyses the current state of uplink data transmissions in CELL_FACH, CELL_PCH and URA_PCH and outlines a proposal for a way forward for improved UL for CELL_FACH state allowing a direct UE access to both HSDPA and HSUPA by combining the random access procedure with the E-DCH concept.")

- **Nokia 2** ("Rel-7 Enhanced CELL_FACH achieved reduced RRC signalling delays and higher bit rates by utilizing HS-DSCH for downlink transmission. ***A natural complement of enhanced CELL_FACH is to apply E-DCH channels for an enhanced CELL_FACH for uplink transmissions.*** This would provide HARQ and power control for the CELL_FACH state uplink transmissions enabling significantly larger data amounts to be delivered in CELL_FACH state with high reliability from the UE to the network.")

- **Nokia 2** ("***The uplink access can be initiated as in Rel'99 by PRACH preamble/AICH acknowledgement procedure, but after receiving the acquisition indication, instead of transmitting the message part over a PRACH channel specifically designed for this sole purpose the UE can be granted with a direct access to E-DCH channels for the payload delivery.***")

- **Nokia 2-3** ("Using EDCH principles for data transmission for extending the random access procedure allows
    - UL interference reduction by fast power control,
    - fast retransmission by exploiting the HARQ functionality,
    - fast and dynamic UL resource allocation using scheduling grants, thus
    - allowing variable and in comparison to REL99 RACH higher data rates
    - EDCH resource co-ordination for dedicated and common users can be co-ordinated within the Node B
    - HSDPA feedback (ACK/NACK and CQI) for the enhanced CELL_FACH feature becomes possible, if the EDCH resources are allocated to a UE for several 10ms to several 100 ms.")

- **Nokia 3** ("The target is to further reduce signalling delays and increase uplink data bit rates for a packet optimised radio together with Node B based scheduling, which has not been addressed for uplink with the WI "enhanced CELL_FACH for FDD" in Rel-7. ***An enhanced random access procedure was proposed, where E-DCH principles for data transmission replace the REL99 message part***. The potentials of enhanced RACH vs REL99 RACH are listed in the table below:

	REL99 RACH	**enhanced RACH**
fast retransmissions	no	yes
fast power control	no	yes
delay to start data transmission	very low	very low
resource allocation period	one TTI period (10 or 20 ms)	up to hundreds of ms (until feasible to change to CELL_DCH)
Delivered payload per procedure	40 bytes	Kilobytes
data rate	low	comparable with EDCH
method to mitigate fast fading	interleaving	fast power control, HARQ

")

- ***See also*** **Nokia, 1-3.**

(g) Element [6.pre]

213. Element [6.pre] recites **"A wireless transmit/receive unit (WTRU) capable of communicating with a base station using an enhanced dedicated channel (E-DCH) resource while in a cell forward access channel (CELL_FACH) state, the WTRU comprising."** The element is met by **Lee** in view of **Nokia**.

214. **Lee in view of Nokia renders obvious a wireless transmit/receive unit (WTRU)** (*see* [1.pre]; "UE") **capable of communicating with a base station** (*see* [1.pre]; "eNode-B") **using an enhanced dedicated channel (E-DCH) resource while in a cell forward access channel (CELL_FACH) state** (*see* [1.pre]; UE "appl[ies] E-DCH channels…for uplink transmissions" to the "eNode-B" while "in [a] CELL_FACH" state)**.**

215. See my discussion of element [1.pre]. As I previously stated, [1.pre] recites a method performed by a WTRU, and element [6.pre] recites the WTRU itself.

(h) Element [6.a]

216. Element [6.a] recites **"a E-DCH buffer."** This element is met by **Lee** in view of **TS25.321**.

217. **Lee in view of TS25.321 discloses an E-DCH buffer** (*see* [1.a]).

218. See my discussion of element [1.a].

(i) Element [6.b]

219. Element [6.b] recites **"a transmitter."** This element is met by **Lee**.

220. **Lee discloses the WTRU comprises a transmitter** (*e.g.,* UE functions as "a transmitter of an uplink signal").

221. **Lee** discloses that a UE functions as a "transmitter of an uplink signal." Lee, 12:12-16. **Lee's** teaches that such signals include "data or control signals," and **Lee's** UE uses resources allocated to it to "transmit data or control signals" on "uplink channels" to an eNode-B. Lee, 13:15-17, 7:24-25. As such, a person of ordinary skill in the art would have understood that **Lee's** UE used a transmitter to perform these transmission functionalities. At minimum, a person of ordinary skill in the art would have found it obvious to implement **Lee's** UE to use a transmitter to perform these transmission functionalities because transmitters are well-known, standard components that are used for this purpose. *See* Ground 1 (Section IX.A.4) regarding element [6.b] (discussing transmitter).

222. *See, e.g.,* **Lee** (emphasis added):

- **Lee Fig. 1**

FIG. 1

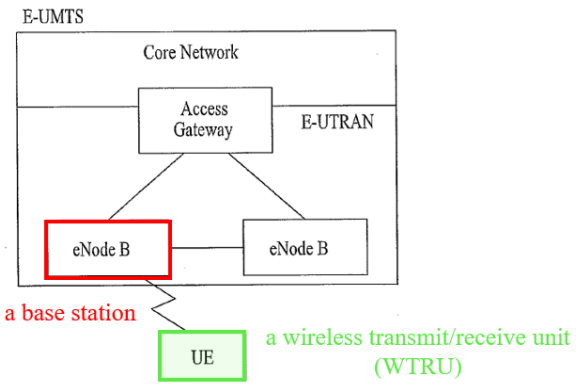

- **Lee 7:24-8:1** ("***The UEs transmit data or control signals*** using prescribed radio resources allocated by the eNode-B. The radio resources allocated by the eNode-B in an uplink transmission are prescribed for specific UEs.")

- **Lee 12:12-16** ("For the convenience of description and better understanding of the present invention, 'terminal' is used to refer to a transmitter of an uplink signal and "base station" is used as a receiver of the uplink signal However, it should be noted that the scope of 'terminal' and 'base station' is not limited to the above-mentioned terms and 'terminal' and 'base station' may also be used to refer to, respectively, a UE and Node-B or eNode-B.")

- **Lee 13:12-17** ("Each UE completes uplink data transmission using the allocated radio resources in an uplink transmission path in which ***the UE is a transmitter*** (Step S61). Uplink radio resources may be left after ***the UE completes the data transmission*** using the radio resources.

  For example, it is assumed that the eNode-B allocates 100 RBs as uplink radio resources of a specific UE. If the radio resources used for the uplink data transmission by the UE are only 80 RBs, 20 RBs may be left in the UE.")

- *See also* **Lee, Figs. 3:19-21, 2:12-14, 5:12-15, 7:6-7, 7:12-13, 8:15-17, 11:23-24, 13:12-20, 14:23-24, 15:4-7, 17:22-25.**

(j) Element [6.c]

223. Element [6.c] recites **"a hybrid automatic repeat request (HARQ) buffer."** This element is met by **Lee** in view of **Nokia** and **TS25.321**.

224. *See* my discussion for element [1.c] above.

(k) Element [6.d]

225. Element [6.d] recites **"a processor; wherein the processor."** This element is met by **Lee**.

226. **Lee discloses the WTRU** (*see* [6.pre]; "UE") **comprises a processor** (*e.g.*, processor that performs a "resource release" process, *see* [1.a]-[1.d])**.**

227. See my discussion for elements [6.pre], [1.pre]-[1.d].

228. As I discussed in connection with elements [6.pre], [1.a]-[1.d], **Lee** discloses a UE that performs a "resource release" process which entails releasing resources when certain conditions are satisfied (*e.g.*, if there is no data left in its transmission buffer). A person of ordinary skill in the art would have understood that **Lee's** UE includes a processor to perform resource release process (*e.g.*, determining whether certain conditions are satisfied in order to trigger resource release). And at minimum, a person of ordinary skill in the art would have found it obvious to use a processor to do so because processors were well-known, standard components that were used for this purpose. *See* Ground 1 (Section IX.A.4) regarding element [6.d] (discussing processor).

(l) Element [6.e]

229. Element [6.e] recites **"determines if the E-DCH buffer is empty."** This element is met by **Lee**.

230. See my discussion for element [1.a].

231. As I discussed in connection with element [6.d], **Lee** not only renders obvious but affirmatively discloses that this determination (*see* [1.a]) is performed by the processor because a processor is a well-known and standard component that is used to perform such processing functionality, such as determining whether certain conditions (*e.g.*, if the E-DCH buffer is empty) are satisfied. *See, e.g.*, Chun, Fig. 8, ¶¶91-97; Hakola-Prov., Fig. 7, ¶¶48, 55-61; Hakola, Figs. 9-10, ¶¶62-65, 67-70.

(m) Element [6.f]

232. Element [6.f] recites **"causes the transmitter to transmit to the base station scheduling information (SI), wherein the SI includes a total E-DCH buffer status (TEBS) equal to zero for the E-DCH buffer when the processor has determined that the E-DCH buffer is empty."** This element is met by **Lee**.

233. See my discussion for element [1.b].

234. As I discussed in connection with element [6.d], **Lee** discloses, or at least renders obvious, that the processor causes the transmitter (*see* [6.b]) to perform this transmission (*see* [1.b]) because a processor is a well-known and standard

component that is used to perform this processing functionality, used for processing steps such as determining whether conditions are satisfied and performing sets of instructions as required by this element. *See, e.g.*, Chun, Fig. 8, ¶¶91-97; Hakola-Prov., Fig. 7, ¶¶48, 55-61; Hakola, Figs. 9-10, ¶¶62-65, 67-70.

(n) Element [6.g]

235. Element [6.g] recites **"determines if the HARQ buffer is empty."** This element is met by **Lee**.

236. See my discussion for element [1.c].

237. As I discussed in connection with element [6.d], **Lee** not only renders obvious but affirmatively discloses that this determining when a HARQ buffer is empty (*see* [1.c]) is performed by a processor because a processor is a well-known and standard component that is used to carry out this processing functionality, such as determining whether certain conditions are met (*e.g.*, if the HARQ buffer is empty). *See, e.g.*, Chun, Fig. 8, ¶¶91-97; Hakola-Prov., Fig. 7, ¶¶48, 55-61; Hakola, Figs. 9-10, ¶¶62-65, 67-70.

(o) Element [6.h]

238. Element [6.h] recites **"releases the E-DCH resource when the transmission of the SI with the TEBS equal to zero has been made and the HARQ buffer is empty."** This element is met by **Lee**.

239. See my discussion for element [1.d].

240. As I discussed in connection with element [6.d], **Lee** not only renders obvious but affirmatively discloses that this release of E-DCH resources (*see* [1.d]) is performed by a processor because a processor is a well-known and standard component that is used to carry out processing functionalities such as executing instructions after determining that certain conditions are satisfied (*e.g.,* releasing resources when transmission of SI with the TEBS equal has been made and the HARQ buffer is empty). *See, e.g.*, Chun, Fig. 8, ¶¶91-97; Hakola-Prov., Fig. 7, ¶¶48, 55-61; Hakola, Figs. 9-10, ¶¶62-65, 67-70.

(p) Claim 10

241. Claim 10 recites **"The WTRU as in claim 6, wherein the transmitter transmits using the E-DCH resource when a response is received on an E-DCH acquisition indication channel (E-AICH) to a preamble transmitted by the WTRU."** This element is met by **Lee**.

242. As I discussed in connection with [6.b], **Lee** not only renders obvious but affirmatively discloses that a transmitter performs the transmission using the E-DCH resource (*see* claim 6) because a transmitter is a well-known and standard component that performs this functionality. *See, e.g.*, Lee, 13:15-17, 7:24-25, 3:21; Chun, Fig. 8, ¶¶91-97; *see also* Hakola-Prov, Fig. 7, ¶¶55-57; Hakola, Fig. 10, ¶70.

C. Grounds 3-4: Grounds 1-2 in view of Sarkkinen (Claims 2-3, 5, 7-9)

1. Sarkkinen

243. **Sarkkinen**, titled "User Equipment-Based Resource Management Method and System" addresses the issue of delays in releasing resources that arise from a UE unnecessarily holding on to resources that it has already determined it doesn't need. Sarkkinen, ¶¶34, 37-38, 41, 47-48.

244. Specifically, **Sarkkinen** discloses multiple ways of improving "resource release procedures" that entail "ensur[ing] that [the] proper utilization of the network resources is maintained" by releasing resources once they are no longer being utilized so that they can be allocated to other UEs in the network that require the resources to carry out transmissions. Sarkkinen, ¶¶6, 36. In this regard, **Sarkkinen** recognizes that there are problems with prior art systems that use an inactivity timer located at the Radio Network Controller (RNC)—external to and separate from a user equipment (UE)—to trigger the release of resources, explaining that these timers have inherent problems owing to "difficulty defining the optimal timer length" and "the burstness nature or packet-switched traffic" that cause "delays in releasing resources," thus "may lead to inefficient use of the resources in high bit rate channels." Sarkkinen, ¶¶6-8, 34. To overcome these problems, **Sarkkinen** proposes placing an inactivity timer internal to the user equipment ("it may be

desirable to have a timer in user equipment") in order to: (1) minimize the risk of prematurely releasing resources in the event of a "reading process" where "data transmission is stopped temporarily," but the UE has not yet completed carrying out its required transmissions using its already allocated resource; (2) trigger "faster" resource release; and (3) allow for the "valuable" and "limited resources in [the] network or system" to "be allocated to other users." Sarkkinen, ¶¶6-8, 34, 36-38, 53. **Sarkkinen** teaches that this UE-side inactivity "timer" starts "**when the last packet of a data transmission is received**" on the uplink (Fig. 2A (color-coded) below) and a person of ordinary skill in the art would have understood that this starting time indicates the point at which the UE no longer utilizes its allocated resource because it has completed its transmissions and this occurs when the UE's buffer has no data for transmission, thus is empty. Sarkkinen, ¶¶25, 34, 36-38; Fig. 2A. **Sarkkinen** also discloses that the UE-side timer **expires after an "inactivity period**" (Fig. 2A (color-coded) below), which triggers the start of the resource release process. *Id*; Sarkkinen, ¶¶27-28.

FIG. 2A

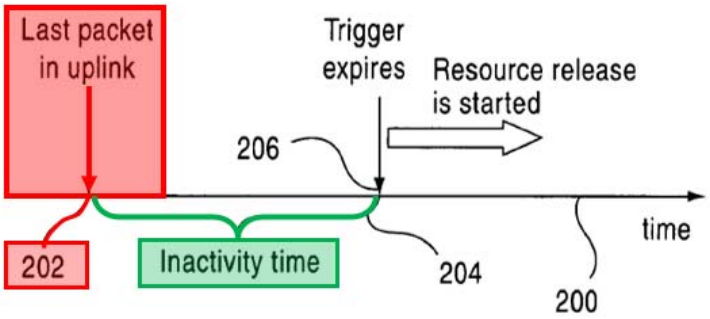

245. Relatedly, **Sarkkinen** also discloses that when "an error condition" that "compromise[s] the transmission of data" between a UE and its serving base station, such as a radio link failure (RLF) when a UE loses its connection with the base station, occurs, the UE's assigned resources are released, forcing the UE "to re-establish the connection [with a base station] with a new configuration or channel." Sarkkinen, ¶47. When such an error condition occurs, the UE sends an "indicator," which entails modifying a "field in a packet" to the base station, to "indicate that transmission should be terminated." Sarkkinen, ¶¶48-49.

246. Like **Wager**, **Lee**, **Nokia**, and **TS25.321**, **Sarkkinen** is in the same field as the '809 patent, which includes wireless communication, and is reasonably pertinent to the alleged problems identified in the '809 patent (including implementing an efficient release of radio resources). *See, e.g.*, Sarkkinen, ¶¶7-8, 32-34, 37-38; Sections IX.A.3 (TS25.321; Motivation to Modify Wager with TS25.321's Teachings), IX.B.2 (Nokia; Motivation to Modify Lee with Nokia's

Teachings), and IX.B.3 (TS25.321; Motivation to Modify Lee (and Nokia) with TS25.321's Teachings). For example, **Sarkkinen** is directed to a method for "managing network resources" in a "wireless network" that entails having "a timer in user equipment…to trigger the transmission of [an] indication" to "inform" a base station that its "uplink data transmission is finished or completed" which "start[s] resource release procedures." Sarkkinen, ¶3, 5, 25, 34; *compare with* '809 patent, 1:25-33, 4:7-13 ("The present application is related to wireless communication" in which "WTRU 210 may use these E-DCH resources for UL transmission until it receives a trigger, at which point the WTRU 210 will release the resources 415. . . . [T]he trigger may be…based on signaling from the RNC or the Node-B 220."), 5:34-36 ("…a method to release E-DCH resources based on the status of a WTRU's 210 queue or 35 buffer."), 6:56-59 ("…the WTRU 210 is releasing the resources once the transmission of data in the HARQ buffers is completed.").

2. Motivation to Modify Wager (in view of TS25.321) with Sarkkinen's Teachings

247. Like **Sarkkinen**, **Wager** contemplates using inactivity timers; specifically, **Wager** discloses using an inactivity timer ("release timer") at the NodeB to trigger the release of E-DCH resources when no "UL transmission has been detected" (*i.e.*, after some period of time where a UE does not send uplink transmissions). Wager-Prov., 3:14-16, 5:7-16; Wager, ¶¶37, 41. As I described

above, **Sarkkinen** discloses using a inactivity timer, instead, at the UE to release resources "faster" than NodeB-side timers and minimize the risk of prematurely releasing resources (*i.e.,* before a UE has completed using its already allocated resources to send uplink transmissions). Sarkkinen, ¶¶6-8, 33-34, 37-38. For at least the reasons I discuss below, a person of ordinary skill in the art would have been motivated to modify **Wager's** Node-B side timer with **Sarkkinen's** timer teachings such that the timer is, instead, implemented at the UE to yield a system where **Wager's** UE-triggered resource release begins after the inactivity timer at the UE expires.

248. First, a person of ordinary skill in the art would have been motivated, or at least had found it obvious, to modify **Wager's** system to use a timer at the UE—not at the Node-B—as taught by **Sarkkinen**, to improve **Wager's** resource release scheme such that resources are released more quickly after they are determined to be unused. For example, **Sarkkinen** critiques timers placed elsewhere other than a UE, such a **Wager's** Node-B timer, and explains they are "not…suitable for high bit rate channels" because they result in "additional delays," and a person of ordinary skill in the art would have understood this is because it takes more time for the Node-B to determine if a UE is done transmitting (by virtue of the Node-B having to wait a certain amount of time to deem the UE inactive) rather than receiving an indication from the UE to indicate it is done transmitting. Sarkkinen,

¶¶7-8. And as such, a person of ordinary skill in the art would have understood E-DCH, as **Wager** is directed to, is a faster data rate channel, and accordingly having an inactivity timer at the NodeB would not result in the most efficient resource release scheme. To avoid these problems, **Sarkkinen** teaches that "it may be desirable to have a timer in user equipment [] to trigger the transmission of" an indication that "start[s] resource release procedures" "as soon as uplink traffic is finished." Sarkkinen, ¶¶25, 34. As **Sarkkinen** explains, and as a person of ordinary skill in the art would have understood, that allowing the resource release procedure to start when uplink transmissions have completed, and thus when the resource is no longer being used by the UE, would advantageously allow the UE to "be changed faster to a specified state" such that "valuable DCH/HSDPA/HSUPA resources [are] allocated to other users" that require sending uplink transmissions but, because resources are limited, are unable to be allocated them. *Id.* Thus, a person of ordinary skill in the art would have understood and appreciated that the application of **Sarrkinen's** UE-side timer teachings to **Wager** would yield a system that improves the overall speed and efficiency of **Wager's** E-DCH resource release mechanism (as modified by **TS25.321**) and thus be more appropriate for the faster data rate E-DCH channels **Wager** is directed. Sarkkinen, ¶¶6-8, 33-34, 37-38; Wager-Prov., 4:6-5:4; Wager, ¶¶8, 28-31.

249. Second, a person of ordinary skill in the art would have been motivated to implement **Sarkkinen's** UE-side timer to **Wager's** system to ensure that resources are not released prematurely, such as when a UE's resource is released due to UE inactivity, which suggests incorrectly that the UE has completed sending all its required uplink transmissions when it is actually inactive because "data transmission [has] stopped temporarily." Sarkkinen, ¶34. For example, **Sarkkinen** recognizes such a scenario in which resources should not be released such as when "data transmission is stopped temporarily…due to a reading process," *e.g.*, a process during which the UE is listening to or reading incoming data, and therefore has temporarily suspended transmission. Sarkkinen, ¶34. "In this instance," **Sarkkinen** teaches that "it may be desirable to have a timer in user equipment" because without a timer, the temporary suspension of data transmission during the "reading process" may be incorrectly interpreted the UE having finished transmitting, and thus no longer requires the resources allocated to it, yielding a premature release of resources before the UE has an opportunity to transmit additional information in response to the received and read information. *Id.* As such, resources are not prematurely released before they are needed by the UE to resume carrying out required data transmissions on the uplink once the "reading process" completes and that the resources are released when, indeed, "uplink traffic [has] finished." *Id.*

250. Third, a person of ordinary skill in the art would have been motivated to modify **Wager** with **Sarkkinen's** teachings of transmitting an indicator to a base station to **Wager** in order to terminate **Wager's** E-DCH transmissions when an "error condition" (*e.g.*, radio link failure; *see* Section IX.C.1 (Sarkkinen)). Sarkkinen; ¶¶43-45, 47, 48-49, 54; Wager-Prov., 4:6-5:4; Wager, ¶¶8, 28-31. A person of ordinary skill in the art would have understood that sending transmissions using connections that may be "comprimise[d]" may result in transmission issues that could cause transmission failure, and that temporarily stopping such transmissions from occurring until a non-compromised connection is made would advantageously improve the "integrity" and "correctness of the data" that is transmitted. Sarkkinen, ¶7. Moreover, a person of ordinary skill in the art would have understood that terminating such transmissions would advantageously minimize the wasting resources because a UE's resources may be released during the time period in which a UE's transmission is "compromise[d]." *Id*.

251. For at least the reasons I provided above, a person of ordinary skill in the art would have had a reasonable expectation of success applying **Sarkkinen's** teachings to **Wager** (in view of **TS25.321**) because timers are standard components commonly used in communication systems (*e.g.*, to determine whether to "wait" for a radio link to be reestablished or abandoned in the event of error conditions that causes a UE to be disconnected from its serving base station) that a person of

ordinary skill in the art would have understood how to configure, or at minimum would been able to find technical resources she could refer to and follow—such as datasheets, design release guides, or configuration manuals—to implement a timer in a UE. Alternately, a person of ordinary skill in the art would have understood that timers were built into the operating systems of processors, and hence would be simple to implement as part of the existing computational processing in a UE. Moreover, **Sarkkinen's** inactivity timer teachings were, as **Sarkkinen** states, designed to be "compatible" with existing wireless communication systems (such as 3GPP's Rel-8 and Rel-99 that **Wager's** system is directed to; *see* Wager-Prov., 1:8-27; Wager, ¶¶3-4; Section IX.A.2 (Wager) as well as user equipment (such as **Wager's** UE; *see* Section IX.A.2 (Wager)), "applicable for all channel types" (such as E-DCH that **Wager** is directed to; *see* Section IX.A.2 (Wager)) and "implemented with other resource release process" (such as **Wager's** resource release scheme; *see* Section IX.A.2 (Wager)) such that **Wager's** "current release procedure[] may not be necessarily removed from existing networks, but may be improved by implementing [**Sarkkinen's**] invention." Sarkkinen, ¶¶36-37, 54. Indeed, **Wager** already provides network-side timers, confirming that the use of a timer would have been successful; it would have been at least obvious to try implementing the timer on the UE side. There are only a limited number of options for where to place an inactivity timer to trigger the release of resources: at the UE, at the Radio Network Controller,

or a base station. Accordingly, a person of ordinary skill in the art would have, at minimum, found it obvious to place an inactivity timer at the UE instead of elsewhere, as at each location the timer would be used for nothing more than a timer's conventional purpose.

3. Motivation to Modify Lee (in view of Nokia/TS25.321) with Sarkkinen's Teachings

252. As I discuss in Section IX.B.1 (Lee), **Lee** discloses a resource release scheme that entails having a UE initiate resource release after determining that "there is no data left for transmission in [its] buffer" and "transmit[ting] an indication" to the eNode-B to inform the eNode-B "that [its] radio resources are no longer needed," but **Lee** does not disclose how to carry out its resource release scheme in situations where transmission is occasionally interrupted. Lee, Figs. 1, 6, 6:19-7:14, 8:8-9:22, 9:13-20, 10:9-11, 13:18-15:12, 16:7-10. For example, **Lee** is silent as to how its resource release scheme would be implemented when a UE undergoes a "reading process" (*see* Sarkkinen, ¶34) that would incorrectly appear to be inactive when it actually has temporarily stopped transmitting data. Thus, **Lee's** system leaves open the possibility that resources may be released prematurely if, for example, the UE has temporarily stopped transmitting to perform a "reading process" while its buffer is empty, but the UE then needs its allocated resources for newly-queued transmissions in the buffer as soon as the reading process is complete. A person of

ordinary skill in the art would have been motivated to modify **Lee** with **Sarkkinen's** UE-side timer teachings, yielding a system that both minimizes the risk of prematurely releasing resources, and also more efficiently releases resources without the need for the UE to wait for a release signal from a Node B, by triggering the release of resources used for transmission after the UE-based inactivity timer expires. For example, this ensures that resources are not prematurely released by delaying the release of resources after a UE's buffer becomes empty to avoid prematurely releasing resources when transmissions take place intermittently. For at least the reasons I provided in Section IX.C.2 (Motivation to Modify Wager (in view of TS25.321) with Sarkkinen's Teachings) (and separate and apart from **Wager's** teachings), a person of ordinary skill in the art would have recognized and appreciated that modifying **Lee** to apply **Sarkkinen's** UE-side inactivity timer teachings improve the speed of resource release achieved by UE-based timers as well as minimize the risk of prematurely releasing resources for reasons similar to those that I summarized above.

253. A person of ordinary skill in the art would have had a reasonable expectation of success applying **Sarkkinen's** teachings to **Lee** because **Sarkkinen** for at least the reasons I discussed in Section IX.C.2 (Motivation to Modify Wager (in view of TS25.321) with Sarkkinen's Teachings), including that Sarkkinen expressly discloses that **Sarkkinen** is designed to be "compatible" with existing

wireless communication systems, "applicable for all channel types," and "implemented with other resource release process" such that **Wager's** "current release procedure[] may not be necessarily removed from existing networks, but may be improved by implementing [**Sarkkinen's**] invention." Sarkkinen, ¶¶36-37, 54.

4. Claims 2-3/8-9: Inactivity Timer Teachings

254. As I explained in Sections IX.A.4 and IX.B.4, Challenged Claims **1** and **6** are obvious over **Wager** in view of **TS25.321**, and **Lee** in view of **Nokia**.

255. **Regarding Challenged Claims 2 and 8 ("[starting/the processor starts] an inactivity timer when the E-DCH buffer is empty"),** with respect to Ground 3 (Wager in view of TS25.321 and Sarkkinen), **Wager discloses and renders obvious a processor** (see [6.d]) **and that the E-DCH buffer is empty when a WTRU's data transmission is complete** (e.g., setting "(TEBS)=0" once the UE has emptied its transmit buffer, *see* [1.a], [6.e]). *See, e.g.*, Wager-Prov., 4:1-5, 4:6-20; 4:27-5:4; *see also* [1.a], [6.e]; Wager, ¶¶23-24, 27-31. As I discussed above in connection with element [1.a], **Wager** discloses a "UE triggered resource release" scheme that entails a UE setting the "Total E-DCH Buffer Status" in "Scheduling Information" to zero and transmitting this SI to the NodeB once the UE has completed carrying out transmissions using its allocated E-DCH resource(s). Wager-Prov., 4:6-15; Wager, ¶31. **Wager** further discloses the use of timers to aid in resource release; specifically, **Wager** contemplates "us[ing]a release timer to

release the common E-DCH resource." *See, e.g.*, Wager-Prov., 5:5-8; Wager, ¶¶37, 44.

256. For Ground 4 (**Lee** in view of **Nokia**, **TS25.321**, and **Sarkkinen**), **Lee discloses and renders obvious a processor** (*see* [6.d]), **and Lee in view of TS25.321** renders obvious **the processor determining that a WTRU's E-DCH buffer is empty** (*see* [1.a], [6.e]). As I explained above in connection with element [1.a], **Lee** (in view of **TS25.321**) renders obvious a system where a UE determines its E-DCH buffer is empty and communicates this determination by setting the Total E-DCH Buffer Status field in "Scheduling Information," contained in the "radio resource allocation release request message" it transmits to a base station, to zero ("TEBS=0"). Lee, Fig. 6, 13:9-14, 13:18-20, 14:4-9, 14:10-12; TS25.321, 67, 68, Table 9.2.5.3.2-1.

257. For both Grounds 3 and 4, **Sarkkinen discloses the wireless transmit/receive unit (WTRU) starting an inactivity timer when its data transmission is complete** (*e.g.*, "start" a "timer…located in user equipment" "due to the inactivity on the [up]link" when "the last packet of a data transmission is received at a controller in the uplink direction"). Sarkkinen, ¶¶25, 27-28, 34, 36-38, Fig. 2A. **Sarkkinen** discloses "using a timer" at the "user equipment" to release resources based on tracking the amount of "inactivity" on the uplink (*i.e.*, based on the period of time the UE does not carry out an uplink transmission). Sarkkinen,

¶¶33-34, 37-38. **Sarkkinen's** UE-side timer is started once the UE transmits its "last packet of data transmission," and it expires after a period of uplink inactivity (meaning that the UE is not carrying out uplink transmissions). Sarkkinen, Fig. 2A, ¶¶37-38. **Sarkkinen** contemplates situations that arise, such as when "data transmission is stopped temporarily" due to a "reading process," which may otherwise have caused resources to be prematurely released (*i.e.*, before "uplink traffic [has] finished"). Sarkkinen, Fig. 2A, ¶34. A person of ordinary skill in the art would have been motivated to modify **Wager** or **Lee** with these teachings from **Sarkkinen** to implement a UE-side inactivity timer that starts when data transmission is complete for at least the reasons I provided in Sections IX.C.2 (Motivation to Modify Wager (in view of TS25.321) with Sarkkinen's Teachings) and IX.C.3 (Motivation to Modify Lee (in view of Nokia/TS25.321) with Sarkkinen's Teachings). **Sarkkinen** further not only renders obvious but affirmatively discloses that a processor starts this timer because a processor is a well-known, standard component used to control other subsystems (*e.g.*, controlling the starting of a timer that is integrated in a UE). *See*, Ground 1 (Section IX.A.4) regarding element [6.d]] (discussing processor).

258. As discussed above in Sections IX.C.2 (Motivation to Modify Wager (in view of TS25.321) with Sarkkinen's Teachings) and IX.C.3 (Motivation to Modify Lee (in view of Nokia/TS25.321) with Sarkkinen's Teachings), a person of

ordinary skill in the art would have been motivated to modify either **Wager** (in view of **TS25.321**) or **Lee** (in view of **TS25.321**) to use a UE-based inactivity timer, as taught by **Sarkkinen**, to avoid prematurely release resources, such as when data transmission appears to stop in the case a UE is carrying out a "reading process" and may be incorrectly deemed as a period of "inactivity" by a base station, yielding a system where the UE-side inactivity timer is started when its E-DCH buffer is empty to ensure that resources are not prematurely released when the "reading process" is finished but the UE still has uplink transmissions to carry out. Sarkkinen, Fig. 2A, ¶¶5, 7-8, 25-26, 34, 37-38; *see* Section IX.C.1 (Sarkkinen).

259. **Similarly, regarding Challenged Claims 3 and 9 ("[triggering the transmission of/the transmitter transmits] the SI when the inactivity timer expires"),** for Ground 3, **Wager discloses and renders obvious that the transmitter** (*see* [6.b]) **transmits the SI** (e.g., UE transmits "Scheduling Information" with TEBS=0 to NodeB to trigger resource release, *see* [1.b], [6.f]). Wager-Prov., Fig. 1, 3:24-25, 4:1-5; 4:6-20; 4:27-5:4; Wager, Figs. 3-4, 5A-B, 6, ¶¶2, 7-9, 28-31. As discussed above in connection with limitations [1.b] and [1.d], **Wager** discloses that resources are released when the UE determines that its E-DCH buffer is empty and transmits Scheduling Information (SI) with the Total E-DCH Buffer Stats set to zero (TEBS=0) to the NodeB in a MAC PDU. Wager-Prov., 4:7-12; Wager, ¶31. The NodeB receives and interprets the "SI" to mean that "the UE

has finished transmission," and accordingly "release[s] the common E-DCH resource, making it available for use by other users" (meaning that the NodeB can allocate released resources to other users). Wager-Prov., 4:12-20; Wager, ¶31.

260. A person of ordinary skill in the art would have understood, or at minimum found it obvious, to use a transmitter to transmit this Scheduling Information because transmitters are well-known, standard components that are used for this purpose. *See* Ground 1 (Section IX.A.4) regarding element [6.b] (discussing transmitter).

261. For Ground 4, **Lee discloses/renders obvious a transmitter** (*see* [6.b]) **and Lee in view of TS25.321 renders obvious that the transmitter transmits the SI** (*see* [1.b], [1.d], [6.f]). As I discussed above in connection with limitations [1.b] and [1.d], **Lee's** system (as modified by the teachings of **Nokia** and **TS25.321**) starts releasing E-DCH resources once the UE transmits a "radio resource allocation release request message" with Scheduling Information (SI) indicating that its E-DCH buffer is empty. *See* [1.d]).

262. For both Grounds 3 and 4, **Sarkkinen discloses triggering the release of resources when the inactivity timer expires** (*see* claims 2 and 8; *e.g.*, "time[] 206 indicates when the timer expires and a trigger for releasing resources to the uplink"). Sarkkinen, ¶38. **Sarkkinen** teaches that "when the timer expires" ("time[] 206" in Fig. 2A), the "releas[e of] resources to the uplink" is "trigger[ed]."

Sarkkinen, Fig. 2A, ¶38; *see* Section IX.C.1 (Sarkkinen). Applying these teachings to either Wager (Ground 3) or Lee (Ground 4) renders obvious the UE triggering the release of resources through the use of a UE-side timer upon the expiration of that timer.

263. As discussed in Sections IX.C.2 (Motivation to Modify Wager (in view of TS25.321) with Sarkkinen's Teachings) and IX.C.3 (Motivation to Modify Lee (in view of Nokia/TS25.321) with Sarkkinen's Teachings), a person of ordinary skill in the art would have been motivated to modify both **Wager's** system (in view of **TS25.321**) and **Lee's** system (in view of **Nokia** and **TS25.321**) with **Sarkkinen's** inactivity timer teachings in order to minimize the risk of prematurely releasing resources when a UE is incorrectly deemed "inactive," yielding a system in which the UE has an inactivity timer that is started once the UE determines that its E-DCH buffer is empty (*see* Challenged Claims **2/8** above), and the release of resources is triggered when the inactivity timer expires, by transmitting the Scheduling Information (SI) informing the base station that the UE is releasing its resources. *See, e.g.*, Sarkkinen, Fig. 2A, ¶¶25, 27-28, 34, 37-38, 43-44, Fig. 3.

5. Claims 5/7: Radio Link Failure Teachings

264. For the reasons I discussed in Sections IX.A.4 and IX.B.4, Challenged Claims **1** and **6** are obvious over **Wager** (in view of **TS25.321**) and **Lee** (in view of **Nokia** and **TS25.321**).

265. **Regarding Challenged Claims 5 and 7 ("[completing/the processor completes] an E-DCH transmission when a cell reselection or a radio link failure occurs")**, for Ground 3, **Wager discloses/renders obvious a processor (*see* [6.d]) that completes an E-DCH transmission** (*e.g.*, UE releases "the common E-DCH resources"; *see* [1.d], [6.h]). Wager-Prov., 4:1-5, 4:6-20; 4:27-5:4; Wager, ¶¶23-24, 27-31, 34. For the reasons I discussed in connection with element [1.d], **Wager** discloses the "release of … common E-DCH resources (Wager-Prov., 4:2-3; Wager, ¶8), specifically a "UE triggered resource release" scheme. Wager-Prov., 4:8-28; Wager, ¶3. The scheme entails the UE triggering the release of a "common E-DCH resource[]" (when it receives "an ACK for all HARQ processes," which occurs when "all HARQ processes have finished") and the UE has completed all E-DCH transmissions and its "E-DCH buffer is empty" (and the UE transmits MAC PDUs to the NodeB that "include[] the Scheduling Information (SI) field in the last MAC PDU" "indicating that Total E-DCH Buffer Status (TEBS)=0"). Wager-Prov., 4:2-28; Wager, ¶31.

266. These teachings also not only render obvious but affirmatively disclose that a processor is used to determine that transmissions should be terminated and completed when a cell reselection or a radio link failure occurs because processors are well-known, standard components that are used for such determinations. *See*, Ground 1 (Section IX.A.4) regarding element [6.d] (discussing processor).

267. For Ground 4, **Lee in view of Nokia and TS25.321 renders obvious a processor completing an E-DCH transmission** (*see* Ground 2 (Section IX.B) regarding element [6.d]) *e.g.*, UE releases "E-DCH resources" after the last E-DCH transmission; *see* Ground 2 (Section IX.B) regarding elements [1.d] and [6.h]). Lee, Abstract, 13:9-11, 13:18-23, 14:6-14, 15:9-13; Nokia, 1-2; TS25.321, 67, 68, Table 9.2.5.3.2.1. As I discussed above in connection with element [1.d], **Lee** in view of **Nokia** and **TS25.321** renders obvious a UE releasing its "E-DCH resources" after it has completed sending E-DCH transmissions by emptying its E-DCH Buffer and setting the TEBS field in Scheduling Information equal to 0. *See* Ground 2 (Section IX.B) regarding element [1.d]. And as explained above, these teachings also not only render obvious but affirmatively disclose the use of a processor, to implement completing a transmission when a cell reselection or a radio link failure occurs because processors are well-known, standard components that are used for such processes. *See* Ground 1 (Section IX.A.4) regarding element [6.d] (discussing processor).

268. For Grounds 3 and 4, **Sarkkinen discloses completing a transmission** (*e.g.*, UE sends an "indicator" to indicate that "transmission should be terminated"; UE terminates "transmission" by releasing resources) **when a radio link failure occurs** (*e.g.*, "the resource may need to be released because of an error condition" that "compromise[s] the transmission of data between the user equipment and the

controller"). Sarkkinen, Fig. 4, ¶¶47-48. **Sarkkinen** discloses that a UE "releas[es]" resources in the event of "an error condition or other problem with the user equipment, the controller, the resource and the like." Sarkkinen, ¶47. Specifically, **Sarkkinen** teaches that an "error condition[] may compromise the transmission of data between the user equipment and the controller," such that any transmission sent between a user equipment (UE) and a controller (base station) is either riddled with errors or would otherwise be indecipherable by the recipient, if even received. *Id*. A person of ordinary skill in the art would have understood that a radio link failure is a type of "error condition," because a radio link failure entails an instance of a faulty connection between a transmission sender and recipient that compromises the transmissions sent between them. Accordingly, **Sarkkinen,** by virtue of directing its system to take into account "error condition[s]," discloses a radio link failure, or at minimum renders it obvious because a person of ordinary skill in the art would have understood that radio link failures are common types of errors that occur in a network that compromise transmissions between two nodes, such as UE and a base station. **Sarkkinen** discloses a UE completing transmissions two ways. *First*, the UE completes the transmission of a packet to a network controller (base station) which includes an "indicator" in an existing field (or adds an field to the packet) to indicate that a data "transmission should be terminated" and which the controller (base station) processes and "recognize[s] that transmission is to be terminated"; and

second, because the purpose of the indicator is to terminate transmission, **Sarkkinen** also discloses that the UE completes transmission by terminating an in-process transmission such that the in-progress message is no longer being transmitted. Sarkkinen, ¶¶47-49.

269. As I discussed in Sections IX.C.2 (Motivation to Modify Wager (in view of TS25.321) with Sarkkinen's Teachings) and IX.C.3 (Motivation to Modify Lee (in view of Nokia/TS25.321) with Sarkkinen's Teachings), a person of ordinary skill in the art would have been motivated to further modify both the **Wager** and **Lee** grounds with these radio link failure teachings, yielding a system in which a UE releases its resources when it has detected a radio link failure, rendering obvious Challenged Claims 5 and 7.

D. <u>Grounds 5-6: Grounds 1-2 in view of TS25.331 (Claims 5/7)</u>

270. Separately and independently of the arguments I have set forth in Grounds 3-4, the combinations of references in Grounds 5-6 also render obvious Challenged Claims 5 and 7 based on the radio link failure and cell reselection teachings of **TS25.331**.

1. TS25.331

271. **TS25.331**, similar to **TS25.321** (*see* overview of **TS25.321** in Section IX.A.3 (TS25.321; Motivation to Modify Wager with TS25.321's Teachings), is a technical specification related to UMTS radio technology that was made publicly

available by the Third Generation Partnership Project (3GPP). TS25.331, 1-2. **TS25.331** is directed to "specif[ying] the Radio Resource Control protocol for the UE-UTRAN [UMTS Terrestrial Radio Access Network] radio interface." TS25.331, 32. Below, I will summarize a subset of teachings from **TS25.331** that are relevant to the grounds in this declaration. For example, **TS25.331** teaches releasing resources in instances where a UE's usage of its allocated resource usage is disrupted by events compromising communications between a UE and its serving base station. TS25.331, Fig. 8.3.1-7, 97-98 9 (Sections 8.1.4.5), 169-205 (Section 8.3.1), 230-231 (Sections 8.3.9.2, 8.3.9.3), 263-264 (Section 8.5.6). Such events occur, for example, when a UE moves from one cell coverage area to another and performs cell reselection, or radio link failure in which a UE has a faulty connection with its base station.

272. Specifically, **TS25.331** teaches a standardized UMTS protocol for a UE to handle resources when "reselecting a cell" or "when a radio link failure occurs." TS25.331, 230-231 (Sections 8.3.9.2, 8.3.9.3), 263-264 (Section 8.5.6); *see also* TS25.331, Fig. 8.3.1-7, 97-98 (Section 8.1.4.5), 169-205 (Section 8.3.1). Specifically, when a UE performs cell reselection or has a radio link failure, such that its previous radio link connection with a cell either should no longer be used or is no longer usable, the UE will "release[] all its radio resources" (*i.e.,* "release all UTRAN specific resources") or "clear the dedicated physical channel

configuration" such that a UE's resources are released. TS25.331, 230-231 (Sections 8.3.9.2, 8.3.9.3), 263-264 (Section 8.5.6); *see also* TS25.331, 97-98 (Section 8.1.4.5), 169-205 (Section 8.3.1), 170 (Fig. 8.3.1-7).

273. Like **Wager**, **Lee**, **Nokia**, and **TS25.321**, **TS25.331** is in the same field as the '809 patent, which includes wireless communication, and is reasonably pertinent to the alleged problems identified in the '809 patent (including implementing an efficient release of radio resources in a wireless communication system). *See, e.g.*, TS25.331, 97-98 (Section 8.1.4.5), 169-205 (Section 8.3.1), 230-231 (Sections 8.3.9.2, 8.3.9.3), 263-264 (Section 8.5.6); Sections IX.A.3 (TS25.321; Motivation to Modify Wager with TS25.321's Teachings), IX.B.2 (Nokia; Motivation to Modify Lee with Nokia's Teachings), IX.C.2 (Motivation to Modify Wager (in view of TS25.321) with Sarkkinen's Teachings), and IX.C.3 (Motivation to Modify Lee (in view of Nokia/TS25.321) with Sarkkinen's Teachings). For example, **TS25.331**, which pertains to technical specifications for a "UMTS" wireless network, provides more details regarding resource release under certain conditions, as I discussed above. TS25.331, 230-231 (Sections 8.3.9.2, 8.3.9.3), 263-264 (Section 8.5.6); *see also* TS25.331, 97-98 (Section 8.1.4.5), 169-205 (Section 8.3.1), 170 (Figure 8.3.1-7).

2. Motivation to Modify Wager (and TS25.321) with TS25.331's Teachings

274. A person of ordinary skill in the art would have been motivated to modify **Wager** (in view of **TS25.321**) with **TS25.331's** teachings of releasing resources in order to improve the efficiency and reliability of release resources in **Wager's** system for at least the reasons I provide below in this section, yielding a system in which **Wager's** UE (that operates in CELL_FACH with assigned resources) initiates the release of its assigned E-DCH resource when it undergoes a cell reselection procedure or a radio link failure occurs.

275. First, modifying **Wager** (in view of **TS25.321**) with **TS25.331's** cell reselection teachings advantageously ensures that a UE releases its allocated resources when it no longer has any use for those resources: *e.g.*, when it moves to another cell. *See* Wager-Prov., 1:3-6, 2:16-18; Wager, Abstract, ¶¶37, 44. Indeed, a person of ordinary skill in the art would have understood and appreciated that it was advantageous for the UE to release its allocated resources when a UE undergoes a cell reselection procedure. *See, e.g.*, Hakola-Prov., ¶2, 14, 17, 19, 21 (an "efficient cell re-selection procedure" that promotes the "timely" release of radio resources, thus addressing the problems of traditional systems that "wast[e] network capacity" and "unnecessarily maintain E-DCH resources,"); Hakola, ¶¶2, 3, 31.

276. Second, modifying **Wager** (in view of **TS25.321**) with **TS25.331's** "radio link failure" teachings advantageously allows the system to release its dedicated resources (e.g., any E-DCH resources that have been allocated to the UE while it is in a CELL_FACH state), which advantageously improves the integrity and correctness of data that is transmitted by eliminating unused resource allocations caused by changes in network conditions, including cell reselections or radio link failures.

277. A person of ordinary skill in the art would have had a reasonable expectation of success modifying **Wager** (in view of **TS25.321**) because the protocols set forth in **TS25.331** were designed to be standardized across systems employing UMTS technologies, like **Wager's**. TS25.331, 2; Wager-Prov., 1:8-23, 1:24-25; Wager, ¶¶3-5, 25-26, 48. Indeed, as I mention above, **Wager** is directed to a process for accessing E-DCH resources using an already existing "procedure" used in "Rel-99" to perform "[Random Access Channel] transmission" ("i.e. with preamble power ramping using randomly selected preamble signatures"), and a person of ordinary skill in the art would have understood "Rel-99," short for "Release-99," refers to the first release of UMTS. Wager-Prov., Fig. 1, 1-24-2:2, 3:24-25, 4:8-10; Wager, Figs. 2-3, ¶¶25-26, 30, 33; *see* Section IX.A.2 (Wager). Thus, **Wager** teaches a method for accessing E-DCH resources that builds off the implementation for doing so in existing UMTS systems. Indeed, **Wager** teaches

assigning E-DCH resources in a CELL_FACH state in a similar way to how such E-DCH resources are assigned in other states as taught in TS25.331. *See id.*; TS25.331, Sections 8.3.9.2, 8.3.9.3, 8.5.6. Accordingly, a person of ordinary skill in the art would have understood that the UMTS signaling mechanisms set forth in **TS25.331** are compatible with the existing UMTS infrastructure on which **Wager's** system was based. Additionally, **TS25.321** expressly references **TS25.331** and vice versa, which would have further motivated a POSITA to look to TS25.331's teachings. *See* TS25.321, 8 (listing TS25.331 as reference no. 7, "[7]"); TS25.331, 32.

3. Motivation to Modify Lee (in view of Nokia/TS25.321) with TS25.331's Teachings

278. For the reasons I discussed in Section IX.D.2 (Motivation to Modify Wager (and TS25.321) with TS25.331's Teachings), a person of ordinary skill in the art would have also been motivated to apply **TS25.331's** cell reselection and radio link failure teachings to **Lee** (in view of **Nokia** and **TS25.321**), yielding a system in which the UE in **Lee's** system initiates the release of its allocated E-DCH resources (as taught by **Nokia** and **TS25.321**, see my discussions in connection with elements [1.pre]-[1.b], [1.d] above) if cell reselection or radio link failure occurs. Indeed, a person of ordinary skill in the art would have understood and appreciated that applying **TS25.321's** teachings would address **Lee's** concern with improving the "efficiency of data communication in a mobile communication system." Lee, 7:16-

17, 8:2-5, 8:13-17, 17:1-6. Releasing resources after a cell reselection or radio link failure changes network conditions by resulting in those resources no longer being needed by the UE advantageously "reduc[es] [the] amount of wasted radio resources." *Id.* Those resources instead may be allocated to and utilized by other UEs in the network. Lee, 7:16-17, 8:2-5, 8:13-17, 17:1-6.

279. A person of ordinary skill in the art would have had a reasonable expectation of success modifying **Lee (**in view of **Nokia** and **TS25.321**) with **TS25.331's** teachings to because the protocols set forth in **TS25.331** were designed to be standardized across systems employing UMTS technologies, and **Lee's** system directed to an "evolved version of a conventional wireless UMTS system" because, as I discussed in Sections IX.B.1 (Lee) and IX.B.3 (Nokia; Motivation to Modify Lee with Nokia's Teachings), **Lee** was disclosed at least as early as 2007,[7] when the LTE standard was still being developed and before features of LTE were introduced in late 2007. *See* https://www.3gpp.org/ftp/Specs/archive/36_series/36.321 (Ex. 1039) (showing Release 8 (v8.0.0) released on December 20, 2007) (last accessed July 13, 2023); *see also* Ex. 1040 (cover page). A person of ordinary skill in the art would have also understood that **Lee's** "evolved version" (Lee, 1:9-11) is based on

[7] **Lee's** disclosure (an international publication) was originally filed in January 2007 (Lee, cover page).

a "conventional UMTS system," disclosed in **Nokia** (Nokia, 1), because each technology builds off the previous iteration (*e.g.*, LTE and/or evolved UMTS each build off UMTS). Indeed, for example, the channels disclosed in **Lee's** "evolved version" (*i.e*. High-Speed Shared Control Channel, HS-SCCH, and High Speed Downlink Shared Channel, HS-DSCH) are channels that are also used in UMTS. *See* Lee, 1:9-11, 6:24-7:2 ("The eNode-B informs the UE of the determined information over an HS-SCCH (High-Speed Downlink Shared Control Channel) and transmits a corresponding data packet (***HS-DSCH***) at a time associated with the transmission of the information over the ***HS-SCCH***."); TS25.321, 86 ("There is one HARQ entity at the UE which processes the HARQ process identifiers received on the ***HS-SCCH*** transmissions associated with MAC-hs PDUs received on the HS-DSCH.") (emphasis added). And as such, a person of ordinary skill in the art would have understood **Lee's** teachings to apply to both existing UMTS systems of the time and forward-looking LTE systems that were starting to be developed in the 2007 timeframe. Additionally, as I discussed above, **TS25.321** expressly references **TS25.331** (and vice versa), thus providing an explicit motivation to look to the teachings of TS25.331. *See* TS25.321, 8 (listing TS25.331 as reference no. 7, "[7]"); TS25.331, 32.

4. Claims 5/7

280. For the reasons I discussed in Sections IX.A and IX.B, Challenged Claims **1** and **6** are obvious over Ground 1 (**Wager** in view of **TS25.321**) and Ground 2 (**Lee** in view of **Nokia** and **TS25.321**).

281. **Regarding Challenged Claims 5 and 7 ("[completing/the processor completes] an E-DCH transmission when a cell reselection or a radio link failure occurs")**, for Ground 5, **Wager discloses and renders obvious a processor** (*see* [6.d]) **that completes an E-DCH transmission** (*e.g.*, UE releases "the common E-DCH resources"; *see* [1.d], [6.h]). Wager-Prov., 4:1-5, 4:6-20; 4:27-5:4; Wager, ¶¶23-24, 27-31, 34. *See* my discussion of Wager above in Section IX.C.5 in connection with Challenged Claims 5 and 7 of Grounds 3-4.

282. For Ground 6, **Lee discloses and renders obvious a processor** (*see* [6.d]) **and Lee in view of Nokia and TS25.321 renders obvious that the processor completes an E-DCH transmission** (*e.g.*, UE releases "E-DCH resources" after the last E-DCH transmission; *see* [1.d], [6.h]). Lee, Abstract, 13:9-11, 13:18-23, 14:6-14, 15:9-13; Nokia, 1-2; TS25.321, 67, 68, Table 9.2.5.3.2.1. *See* my discussion of Lee above in Section IX.C.5 (Claims 5/7: Radio Link Failure Teachings) in connection with Challenged Claims 5 and 7 of Grounds 3-4.

283. For both Grounds 5 and 6, **TS25.331 discloses completing a transmission when a cell reselection occurs** (*e.g.*, "[w]hen the UE has succeeded

in reselecting a cell…the UE shall[]…release all UTRAN specific resources") **or a radio link failure occurs** (*e.g.*, "[w]hen a radio link failure occurs…the "UE shall[]…clear the dedicated physical channel configuration"). TS25.331, 230-231 (Sections 8.3.9.2, 8.3.9.3), 263-264 (Section 8.5.6); *see also* TS25.331, 170 (Fig. 8.3.1-7), 97-98 (Section 8.1.4.5), 169-205 (Section 8.3.1).

284. **TS25.331** discloses that if the UE "has succeeded in reselecting a cell" (*i.e.*, cell reselection occurs), the "UE shall" "release all UTRAN specific resources," and thus complete any transmissions that use dedicated resources (e.g., E-DCH resources). TS25.331, 230-231 (Sections 8.3.9.2, 8.3.9.3); *see also* 170 (Fig. 8.3.1-7), 97-98 (Section 8.1.4.5), 169-205 (Section 8.3.1). **TS25.331** also discloses that "[w]hen a radio link failure occurs," a "UE shall[]" "clear the dedicated physical channel configuration," thus complete any transmissions that use dedicated resources. TS25.331, 263-264; *see also* 170 (Fig. 8.3.1-7), 97-98 (Section 8.1.4.5), 169-205 (Section 8.3.1).

285. For the reasons I discussed in Sections IX.D.2 (Motivation to Modify Wager (and TS25.321) with TS25.331's Teachings) and IX.D.3 (Motivation to Modify Lee (in view of Nokia/TS25.321) with TS25.331's Teachings), a person of ordinary skill in the art would have been motivated to modify **Wager** (in view of **TS25.321**) or **Lee** (in view of **Nokia** and **TS25.321**), yielding systems in which **Wager's/Lee's** UE completes an E-DCH transmission as part of a procedure of

releasing its E-DCH resources when it no longer is using those resources, either due to a cell reselection such that those resources are no longer needed, or a radio link failure occurs such that those resources can no longer be used.

E. Grounds 7-12: Grounds 1-6 in view of Chun

286. For the reasons I discussed above, Grounds 1-6 render obvious the Challenged Claims. But, to the extent further disclosure of a "transmitter" or "processor" is required, as recited in claim 6, **Chun** discloses these components. Chun, Fig. 8, ¶¶40, 51, 91-97.

287. **Chun**, titled "Communicating Control Information in Mobile Communication System," is directed to a "mobile communication system" consisting of "**a wireless communication apparatus 100" (e.g., "mobile terminal")** that "includes a **processing unit module 110" (e.g., "microprocessor and a digital processor**"), and a "RF module 135…[that] includes **a transmitter.**" Chun, Fig. 8 (shown with color annotations below), ¶¶2, 91-95. The "processing unit module" "process[es] the radio signal," "is appropriately used for the wireless communication apparatus to receive data, process the received data and transmit the processed data," and is "adapted to process control information to be transmitted and generate a data block." Chun, ¶¶94-96. The "transmitter," under the control of the "processor unit module," "transmit[s] a radio signal" that is "measured or generated by the wireless communication apparatus to the network." Chun, ¶¶94-95.

FIG. 8

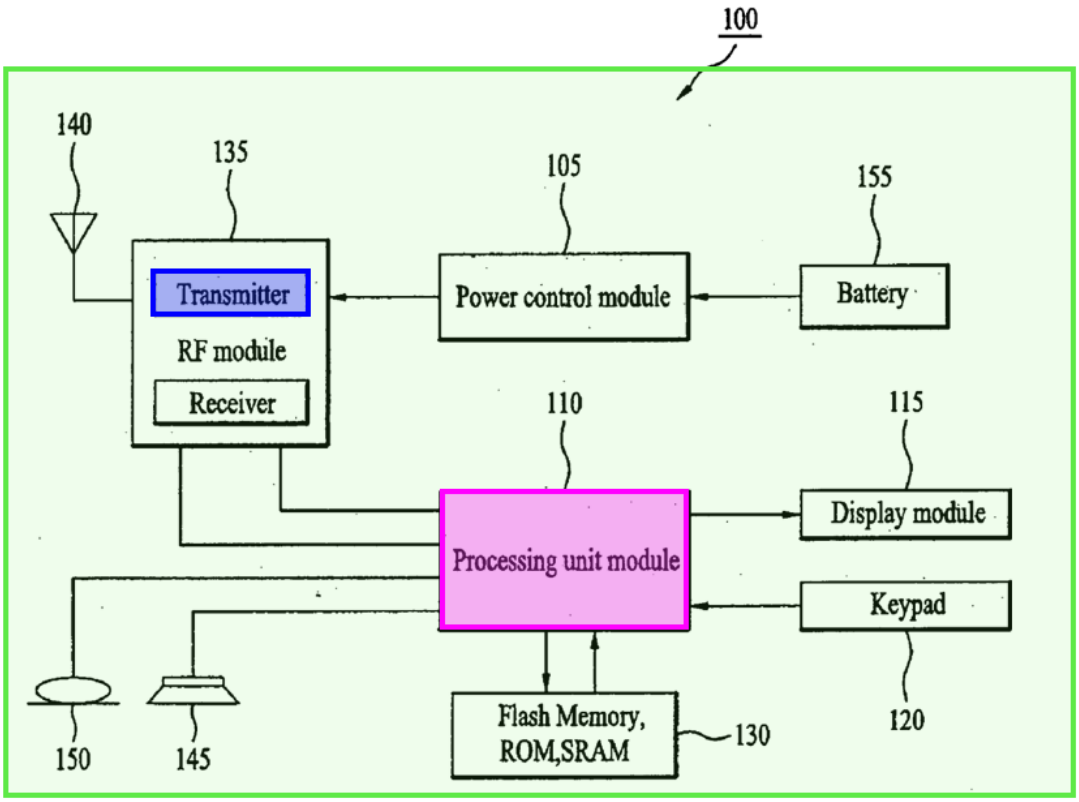

Thus, **Chun's** "processing unit module" and "transmitter" disclose the "transmitter" and "processor," respectively, of the Challenged Claims. **Chun** describes each component to have functionalities that are consistent with those performed by these components. A person of ordinary skill in the art would have been motivated to modify combinations of references based on **Wager** and **Lee** set forth in Grounds 1-6 with the hardware componentry teachings of a transmitter and processor form **Chun** to facilitate the required processing and communication in the UEs.

288. Like the references relied upon in **Grounds 1-6** (*i.e.*, **Wager**, **TS25.321, Lee**, **Nokia**, **Sarkkinen**, and **TS25.331**), **Chun** is in the same field as

the ’809 patent, which includes wireless communication, and is reasonably pertinent to the ’809 patent’s alleged problems (including implementing a wireless communications device). ’809 patent, 1:25-33, 3:59-4:15, 5:34-61, 6:21-27, 6:46-63; Chun, ¶¶67, 88. For example, **Chun** is directed to “a mobile communication system” that entails a “mobile terminal” (such as “a PDA or notebook computer provided with a wireless communication function” using “different wireless interfaces and physical layers such as TDMA, CDMA, FDMA, etc.”) that communicates “control information.” Chun, ¶¶67, 88; *compare with* ’809 patent, 3:25-3 (“…a wireless communication system 200 including a plurality of WTRUs 210, a base station 220…”), 2:37-39 (“the WTRU 210 is in communication with the base station 220”), 2:66-3:4 (“When referred to hereafter, the terminology “wireless transmit/receive unit (WTRU)” includes but is not limited to a user equipment (UE), a mobile station, a fixed or mobile subscriber unit, a pager, a cellular telephone, a personal digital assistant (PDA), a computer, or any other type of user device capable of operating in a wireless environment.”).

289. As I discussed above, **Wager** and **Lee** teach that a UE performs various processing and transmission functionalities. *See* Sections IX.A.4 (Invalidity of Claims 1, 4, 6, 10 Over Wager in view of TS25.321) and IX.B.4 (Invalidity of Claims 1, 4, 6, 10 Over Lee in view of Nokia and TS25.321) (in connection with elements [6.b], [6.d])). Thus, a person of ordinary skill in the art would have been

motivated to look to **Chun** as a reference that discusses implementing the well-known functionalities of processing and transmitting information using hardware components. Moreover, a person of ordinary skill in the art would have been motivated to apply **Chun's** teachings to the **Wager's** and **Lee's** UEs to yield devices that use processors to process information and control device functions, and transmitters in order to exchange transmissions and communicate with a base station, thus rendering obvious Challenged Claims 6-10.

290. A person of ordinary skill in the art would have had a reasonable expectation of success modifying **Wager** (in view of **TS25.321**, **Sarkkinen**, and **TS25.331**), and **Lee** (in view of **Nokia**, **TS25.321**, **Sarkkinen**, and **TS25.331**) with **Chun's** transmitter and processor teachings because these components were standard and well-understood components used for their well-understood intended purposes of transmitting and processing information. *See, e.g.*, Ground 1 (Section IX.A.4) in connection with elements [6.b] and [6.d] (discussing processor and transmitter); Terry-266 (Ex. 1018), Fig. 1, ¶¶6, 8, 16 ("FIG. 1 is a block diagram of a wireless communication System 100 operating in accordance with the present invention. The system 100 comprises a WTRU 102, a Node-B 104, and a radio network controller (RNC) 106. The WTRU 102 transmits data through an E-DCH 108 with a transmitter 120[.]"); Sung (Ex. 1019), ¶268; Terry-722 (Ex. 1020), Fig.1, ¶¶16-18; Hakola-Prov., Fig. 7, ¶¶55, 56 ("FIG. 7 is a diagram of exemplary

components of a mobile station (e.g., handset)… Pertinent internal components of the telephone include a Main Control Unit (MCU) 703 ... a receiver/transmitter unit"), 57-59, 60 ("Digital to Analog Converter (DAC) 743 converts the signal and the resulting output is transmitted to the user through the speaker 745, *all under control of a Main Control Unit (MCU) 703 -- which can be implemented as a Central Processing Unit (CPU) (not shown)*."), 61 (emphasis added); Hakola, Fig. 9, Fig. 10 (depicting "PROCESSOR"), ¶¶62-65, 67-70. Indeed, **Chun** expressly teaches that its "RF module," which includes a "transmitter," and "processing unit module" can be "readily applied to other types of apparatuses," including **Wager's** or **Lee's** devices. Chun, ¶99 ("The present teaching can be readily applied to other types of apparatuses.").

291. Thus, a person of ordinary skill in the art would have understood that Grounds 1-6, in further view of **Chun,** further render obvious Challenged Claims 6-10.

X. SECONDARY CONSIDERATIONS

292. I have found no evidence in the '809 patent's prosecution history or elsewhere supporting any secondary considerations argument, or evidence of nexus to any Challenged Claim. *See generally* '809 File History (Ex. 1002). Indeed, as demonstrated by the prior art referenced herein, any purported solutions to problems or unexpected results in the '809 patent were already well known.

XI. CONCLUSION

293. In summary, I have concluded that the Challenged Claims are rendered obvious over the prior art references as discussed above. Specifically, in my opinion, for at least the reasons above, the Challenged Claims of the ’809 patent are disclosed and rendered obvious as follows:

Ground	Claims	Anticipation or Obviousness	Prior Art References
1	1, 4, 6, 10	Obvious	**Wager** in view of **TS25.321**
2	1, 4, 6, 10	Obvious	**Lee** in view of **Nokia** and **TS25.321**
3-4	2-3, 5, 7-9	Obvious	Grounds 1-2 in further view of **Sarkkinen**
5-6	5, 7	Obvious	Grounds 1-2 in further view of **TS25.331**
7-12	1-10	Obvious	Grounds 1-6 in further view of **Chun**

294. To the extent it is argued that any further disclosure is required for an element in the Challenged Claims that I have identified as being disclosed, a person of ordinary skill in the art would certainly have found that element obvious to include based on the sample explicit disclosure or inherent disclosures and analysis I have identified above.

295. I reserve the right to supplement my opinions in the future to respond to any arguments that Patent Owner or its expert(s) may raise and to take into account new information as it becomes available to me.

296. In signing this declaration, I recognize that the declaration will be filed as evidence in a contested case before the Patent Trial and Appeal Board of the United States Patent and Trademark Office. I also recognize that I may be subject to cross-examination in the case and that cross-examination will take place within the United States. If cross-examination is required of me, I will appear for cross-examination within the United States during the time allotted for cross-examination. I hereby declare that all statements made herein of my own knowledge are true and that all statements made on information and belief are believed to be true; and further that these statements were made with the knowledge that willful false statements and the like so made are punishable by fine or imprisonment, or both, under Section 1001 of Title 18 of the United States Code.

Executed this 9th day of August 2023, in South Bend, Indiana.

Respectfully submitted,

Dr. Bertrand Hochwald

Appendix A

Bertrand M. Hochwald
Department of Electrical Engineering
University of Notre Dame
275 Fitzpatrick Hall
Notre Dame, IN 46556
office: 574-631-8875
bhochwald@nd.edu

Home:
1329 E. Jefferson Blvd
South Bend, IN 46617
cell: 574-261-1857
bhochwald@gmail.com

Degrees:

BS (Engineering) 1984, Swarthmore College
MS (Electrical Engineering) 1986, Duke University
MA (Statistics) 1993, Yale University
PhD (Electrical Engineering) 1995, Yale University

Experience:

Department of Defense, Fort Meade, Maryland. *Electrical Engineer*, 1986–1989.
Yale University, New Haven, Connecticut. *Teaching assistant*, 1990–1994.
University of Illinois, Urbana-Champaign
Postdoctoral Research Associate in data compression, 1995.
Visiting Faculty in Department of Electrical Engineering, 1996.
Bell Laboratories, Lucent Technologies, Murray Hill, New Jersey
Member of Technical Staff, 1996–2002.
Distinguished Member of Technical Staff, 2002–2005.
Columbia University, New York
Visiting Faculty in Department of Electrical Engineering, 2005.
Beceem Communications, Santa Clara, California
Chief Scientist, 2005–2009,
Vice-President Systems Engineering, 2009–2010.
Stanford University, Palo Alto, California
Consulting Professor of Electrical Engineering, 2006–2010.
University of Notre Dame, Notre Dame, Indiana
Frank M. Freimann Professor of Electrical Engineering, 2011–present.
University of Notre Dame, Notre Dame, Indiana
Co-Director of The Wireless Institute, 2016–present.

Honors:

New York State: *Regents Scholarship*, 1980.
Pennsylvania ACM computer programming competition: *Winner*, 1983.
Duke University: *Eta Kappa Nu engineering honor society*, 1985.
Department of Defense: *Special Achievement Awards*, 1988, 1989.
Yale University: *Prize Teaching Fellowship teaching award*, 1993.
Bell Laboratories: *President's Gold Award*, 2002.
Thomson Essential Science Indicators
Top one-tenth of one percent referenced papers, 2002 and 2003.
IEEE Transactions on Communications
Stephen O. Rice Best Paper Award, 2006.
IEEE
Fellow, 2008.
Thomson Reuters
World's Most Influential Scientific Minds, multiple years.

Honors (cont'd):

IEEE Transactions on Circuits and Systems
Young Author Best Paper Award, 2016 (my PhD student).

IEEE Transactions on Antennas and Propagation
H. A. Wheeler Prize Paper Award, 2018.

The Marconi Society
Paul Baran Young Scholar Award, 2018 (my PhD student).

National Academy of Inventors
Fellow, 2019.

Research Gifts, Grants and Contracts:

Principal Investigator, "NSF EAGER: Multiple Transmitter Chains to Minimize Exposure to Electromagnetic Radiation in Portable Devices," National Science Foundation CCF-1141868, August 1, 2011–July 31, 2013, $200,000.

Co-Principal Investigator, "Planning Grant: I/UCRC in Broadband Wireless Technologies and Applications," National Science Foundation IIP-1266124, April 1, 2013–March 31, 2014, $14,544.

Co-Principal Investigator, "I/UCRC Phase I: BWAC@NDWI: Broadband Wireless Access and Applications at the Notre Dame Wireless Institute," National Science Foundation, IIP-1439682, August 1, 2014–July 31, 2019, $325,000.

Principal Investigator, "Modeling, Analysis, and Code Design for Portable Wireless Transmitters Subject to an Electromagnetic Exposure Constraint," National Science Foundation, CCF-1403458, September 1, 2014–August 31, 2018, $1,200,000.

Principal Investigator, "Notre Dame Millimeter-Band Capability," Equipment Restoration and Renewal Grant, May 31, 2015–May 31, 2016, $183,000.

Principal Investigator, "Channel Estimation Technologies based on AoA/AoD in High-Frequency Wireless Communication Systems," Huawei Technologies, June 22, 2015–October 31, 2016, $181,217.

Principal Investigator, "*Radiohound*: A Low-Cost Spectrum Beacon/Sensor with Millimeter Wave Capability," Alcatel-Lucent and Interdigital Corporations, June 1, 2015–May 31, 2018, $240,000.

Principal Investigator, "Low-Complexity High-Bandwidth Multiport Matching Networks for Coupled Loads," National Science Foundation, ECCS-1509188, August 1, 2015–July 31, 2018, $400,000.

Principal Investigator, "Notre Dame Coherent RadioHound: A Distributed Spectrum Sensor Network," Laboratory for Telecommunications Sciences, May 6, 2016–May 5, 2017, $187,124.

Co-Principal Investigator, "Wideband Time-Domain Millimeter-Wave Device and Channel Characterization Testbed," Department of the Navy, July 15, 2016–July 14, 2017, $326,573.

Principal Investigator, "SpecEES: Wideband Wireless Communications with Low-Power Transceiver-Cell Circuits," National Science Foundation, ECCS-1731056, August 15, 2017–August 14, 2020, $650,000.

Principal Investigator, "Data Gathering Plan for Radio-Frequency Machine-Learning Systems," Defense Advanced Research Projects Agency, October 1, 2017–June 1, 2018, $149,332.

Principal Investigator, "REU Site: AWaRE Advanced Wireless Research Experiences at the University of Notre Dame," National Science Foundation CNS-1757804, January 15, 2018–December 31, 2020, $359,789.

Co-Principal Investigator, "Physical Layer Signature Discrimination of Transmitters," The George J Kostas Research Institute for Homeland Security at Northeastern University (KRI), March 30, 2018–October 29, 2020, $100,000.

Research Gifts, Grants and Contracts (cont'd):

Co-Principal Investigator, "An Infrastructure-less and Heterogeneous Distributed Sensor for Electromagnetic Spectrum Sensing and Emitter Geolocation," Department of the Army, June 15, 2018–June 14, 2019, $370,234.

Co-Principal Investigator, "Improving STEM Retention Through Hands-On Implementation and Red-Teaming," Office of Naval Research, August 15, 2018–August 14, 2021, $735,830.

Principal Investigator, "Ultra Low Cost/Power Massive MIMO Architecture and Algorithm," Futurewei Technologies, Inc, Gift, September 13, 2018, $200,000.

Principal Investigator, "Ultra Low-Cost Low-Power Millimeter-Wave Transceiver," AT&T Innovation Lab, September 15, 2018–September 14, 2020, $220,000.

Principal Investigator, "MLWiNS: Quality Versus Quantity in Spectrum Sensing with Distributed Sensors," National Science Foundation jointly with Intel Corporation, July 1, 2020–June 30, 2023, $665,000.

Principal Investigator, "Low-Cost Low-Power Millimeter-Wave Transceiver," AT&T Innovation Lab, January 1, 2021–December 31, 2021, $110,000.

Co-Principal Investigator, "Stationary and Aerial-Based RF/Radar Detection of Drones, Concealed Threats and Anomalous Communications," Department of Homeland Security, October 1, 2021–September 30,2031, $1,000,000.

Senior Personnel, "SpectrumX - An NSF Spectrum Innovation Center," National Science Foundation, September 15, 2021–September 14, 2026, $25,000,000.

Co-Principal Investigator, "Self-Powered Wireless Sensor System for Health Monitoring of Liquid-Sodium Cooled Fast Reactors," Department of Energy, October 1, 2021–September 30, 2024, $640,000.

Principal Investigator, "Ultra Low-Cost Low-Power Millimeter-Wave Transceiver," AT&T Innovation Lab, January 1, 2022–December 31, 2022, $110,000.

Patents:

"Multiple Antenna Communication System and Method Thereof," #6058105, May 2, 2000.
"Wireless Transmission Method for Antenna Arrays, Having Improved Resistance to Fading," #6327310, December 4, 2001.
"Antenna Array Having Reduced Sensitivity to Frequency-Shift Effects," #6349219, February 19, 2002.
"Wireless Transmission Method for Antenna Arrays Using Unitary Space-Time Signals," #6363121, March 26, 2002.
"Space-Time Spreading Method of CDMA Wireless Communication," #6452916, September 17, 2002.
"Method of Wireless Communication Using Structured Unitary Space-Time Signal Constellations," #6693976, February 17, 2004.
"Method for Wireless Differential Communication Using Multiple Transmitter Antennas," #6724842, April 20, 2004.
"Method for Wireless Communication using Unitary Space-Time Signal Constellations," #6801579, October 5, 2004.
"Method of Multiple-Antenna Wireless Communication Using Space-Time Codes," #6944236, September 13, 2005.
"Cayley-Encodation of Unitary Matrices for Differential Communication," #7170954, January 30, 2007.
"Method and Apparatus for Detection and Decoding of Signals Received from a Linear Propagation Channel," #7236536, June 26, 2007.
"Method of Signal Transmission to Multiple Users From a Multi-Element Array," #7317764, January 08, 2008.
"Downlink Coordinated Transmission in OFDMA Systems," #7706335, April 27, 2010.
"Downlink Coordinated Transmission in OFDMA Systems, Including WiMax Systems," #7764658, July 27, 2010.
"Spherical Decoder for Wireless Communications," #7822150, October 26, 2010.
"Method for Estimating Frequency Offset at a Subscriber Station Receiver in a Multi-Carrier System," #7916800, March 29, 2011.
"Estimating Frequency Offset at a Subscriber Station Receiver," #7929595, April 19, 2011.
"Method of a Receiver Estimating a Plurality of Channels," #8194774, June 5, 2012.
"Method of Aiding Uplink Beamforming Transmission," #8259672, September 4, 2012.
"Multi-Stream Priority-Based Space-Time Coding," #8284693, October 9, 2012.
"Estimating a Subscriber Location," #8290508, October 16, 2012.
"Selecting a Transmission Mode Between a Subscriber and a Base Station," #8311003, November 13, 2012.
"Noninvasive Characterization of Electrical Power Distribution Systems," #8427169, April 23, 2013.
"Method and System of Beamforming a Broadband Signal Through a Multiport Network," #8432997, April 30, 2013.
"Estimating a Subscriber Location," #8611925, December 17, 2013.
"Characterization of Electrical Power Distribution Systems," #8633705, January 21, 2014.
"Allocating Antennas for Cyclic Delay Diversity," #8675761, March 18, 2014.
"Wireless Transceivers with Filter Arrangement for WiFi and WiMax coexistence," #8681748, March 25, 2014.
"Multiple Antenna Signal Transmission," #8737529, May 27, 2014.
"Selecting a Transmission Mode Between a Subscriber and a Base Station," #8750236, June 10, 2014.
"Multiple Antenna Transceiver," #8761694, June 24, 2014.

Patents (cont'd):

"Characterization of Electrical Power Distribution Systems Using Characterization Matrices," #8810253, August 19, 2014.

"Method and System of Beamforming a Broadband Signal Through a Multiport Network," #8811530, August 19, 2014.

"Distribution of Transmit Signal to Multiple Transmit Antennas for Reduction," of Measured Specific Absorption Rate," #8811918, August 19, 2014.

"Method of Transmission from Multiple Transmit Chains Based on a Cost Function" for Electromagnetic Radiation," #8818294, August 26, 2014.

"Method and System for Uplink Coordinated Reception in Orthogonal Frequency Division Multiple Access Systems," #8855046, October 7, 2014.

"Method of Coding Using Multiple Transmit Chains for Reduced Exposure to Electromagnetic Radiation," #8929828, January 6, 2015.

"Method and Apparatus for Link Adaptation in a Wireless Communication Network," #8942184, January 27, 2015.

"Method and Apparatus for Managing Uplink Communication in Wireless Network," #9026123, May 5, 2015.

"Method of Updating Transmission of Channel Information Based on Eaves-Dropping of Beamformed Signals," #9178597, December 8, 2015.

"Adaptive Transmit Beamforming," #9209876, December 8, 2015.

"Method and Apparatus for Managing Uplink Communication in a Wireless Communication Network," #9210716, December 8, 2015.

"Wireless Transceivers with Filter Arrangement for WiFi and LTE coexistence," #9232564, January 5, 2016.

"Mobile Subscriber Information Transmission Over Multiple Uplink Frames," #9236975, January 12, 2016.

"Method of Aiding Uplink Beamforming Transmission," #9344178, May 17, 2016.

"Adaptive Transmit Beamforming for Frequency Division Duplexing Systems," #9537684, January 3, 2017.

"Mitigating Beam Squint in Millimeter Wave Wireless Communication Systems," #10819405, October 27, 2020.

"Low-Resolution, Low-Power, Radio-Frequency Receiver," #11121896, September 14, 2021.

"Ultra-Low-Power Millimeter-Wave to Baseband Receiver Module for Scalable Massive MIMO," #11296742, April 5, 2022.

"Low-Power, Self-Referenced Receiver," #11303347, April 12, 2022.

Professional Feature Videos, Projects, Web-pages, and Plenary Talks

"Multiple Antennas: How a Point-to-Point Advantage Becomes a Multi-user Advantage." Plenary Speaker at the *22nd Biennial Symposium on Communications*, Queens University, Kingston, Ontario, June 2004.

"A Random-Channel Graph-Theoretic Perspective of Wireless Networks." Plenary Speaker at the *2006 Seventh Annual IEEE Workshop on Signal Processing Advances in Wireless Communication*, Cannes, France, July 2006.

"The Role of MIMO in Fourth-Generation Mobile Wireless Systems and Beyond." Plenary Speaker at the *2009 IEEE Communication Theory Workshop*, Napa, California, May 2009.

"What Have We Learned So Far About MIMO in Mobile Wireless Systems?" Plenary Speaker at the *2009 Tenth Annual IEEE Workshop on Signal Processing Advances in Wireless Communication*, Perugia, Italy, June 2009.

"Bandwidth of Large-Scale Multiport Radio-Frequency Systems." Plenary Speaker at the *20th International ITG Workshop on Smart Antennas*, Munich, Germany, March 2016.

"Building a Better Phone," University of Notre Dame web page feature story, 2016: https://www.nd.edu/stories/building-a-better-phone/

"Notre Dame Researchers Target Cell Phone Radiation," WSBT television feature story, 2016: https://wsbt.com/news/local/notre-dame-researchers-target-cell-phone-radiation. https://engineering.nd.edu/news-publications/engineering-in-the-news/notre-dame-researchers-target-cell-phone-radiation

Principle Investigator for the *RadioHound Spectrum Sensing System*, 2015–present: https://wireless.nd.edu/research/radiohound-distributed-spectrum-sensing

Editorial, Panelist, and Professional Service Activities

Owner and Editor of `http://mars.bell-labs.com`, the *Multiple-Antenna Research and Solutions* web-site dedicated to promoting research into space-time techniques, 1998–2005. (800 subscribers)

Guest Associate Editor, *IEEE Transactions on Signal Processing Special Issue on Signal Processing for Communications,* with N. Al-Dhahir, G. Giannakis, B. Hughes and T. Marzetta, vol. 50, October 2002.

Guest Editor, *IEEE Transactions on Information Theory Special Issue on Space-Time Transmission, Reception, Coding and Signal Design,* with G. Caire, B. Hassibi and T. Marzetta, vol. 49, October 2003.

Associate Editor for MIMO Techniques, *IEEE Transactions on Communications*, November 2003–2005.

Associate Editor for *IEEE Transactions on Information Theory*, 2011–2012.

IEEE Fellows Committee for the Information Theory Society, 2016–2017.

Panelist, National Science Foundation Signal Processing Systems Faculty Early Career Development Program (CAREER), November 2002; Computer and Information Science Communications/Signal-Processing Research Program, April 2004; Theoretical Foundations of Communications and Signal-Processing Research Program, May 2007; Computing and Communication Foundations (CCF): Core Programs, February 2010; Communications and Information Foundations (CIF), December 2011; Communications and Signal Processing, April 2014; Computer and Network Systems Research Experience for Undergraduates (CNS-REU), November 2018.

Technical Program Chair, *2018 IEEE Communication Theory Workshop*, Miramar Beach, Florida, May 2018.

University Service Activities

Graduate Admissions Committee, 2012–present.
Graduate Committee, 2012–2013, 2016–2018.
College Council, 2014–2017.
Committee for Appointments and Promotions, 2016–2017.

CRADA (Cooperative Research and Development Agreement) between University of Notre Dame and Crane Naval Base, Crane, Indiana, 2016–present.

Co-Director, University of Notre Dame Wireless Institute, 2016–present. In 2017–2018, approximately $4M/yr in expenditures was routed through the Institute in various projects, including *RadioHound*.

Principal Investigator of an ongoing (2018–) National Science Foundation-funded Research Experience for Undergraduates (REU), sponsoring ten undergraduates from around the United States that visit the University of Notre Dame Wireless Institute for a ten-week research program every summer.

Past Co-Advised PhD Students:

Ibrahim Abou-Faycal (Massachusetts Institute of Technology), 1998
Sriram Vishwanath (Stanford University), 2002
Christian Peel (Brigham-Young University), 2003
Radhika Gowaikar (Caltech), 2005
Heunchul Lee and Kyoung Jae Lee (Korea University), 2007

MS and PhD Students at University of Notre Dame:

Luyu Zhao, MS 2013
Ding Nie, PhD 2015
Kang Gao, PhD 2020
Arash EbadiShahrivar, PhD 2021
Abbas Termos, PhD 2022
Mir Sahariat, MS 2022
Xiangbo Meng, PhD
Christopher Wahl, PhD

Courses, Book Chapters, Tutorials

"Probabilistic Methods in Signal and System Analysis." Senior-level undergraduate course, University of Illinois, Urbana-Champaign, January–May 1996.

"Multi-Antenna Wireless Communications—from Theory to Algorithms," with B. Hassibi and T. Marzetta. Tutorial at *IEEE Conference on Acoustics, Speech and Signal Processing*, Orlando, FL, May 2002.

"Communication Theory." Senior-level undergraduate course, Columbia University, September–December 2005.

"Linear and Dirty-Paper Techniques for the Multiuser MIMO Downlink," with Christian B. Peel, Quentin H. Spencer, A. Lee Swindlehurst and Martin Haardt. Book chapter in *Space-Time Processing for MIMO Communications*, A. B. Gershman and N. D. Sidiropoulos (editors), Chichester: John Wiley & Sons, 2005.

Theses and Journal Papers

"Aspects of Vector-Sensor Processing." PhD thesis, Yale University, 1995.

B. Hochwald and A. Nehorai, "Concentrated Cramér-Rao bound expressions," *IEEE Transactions on Information Theory*, vol. 40, pp. 363–371, March 1994.

B. Hochwald and A. Nehorai, "Minimum bias priors for estimating additive terms in state-space models," *IEEE Transactions on Automatic Control*, vol. 40, pp. 684–693, April 1995.

B. Hochwald and A. Nehorai, "Polarimetric modeling and parameter estimation with applications to remote sensing," *IEEE Transactions on Signal Processing*, vol. 43, pp. 1923–1935, August 1995.

B. Hochwald and A. Nehorai, "Identifiability in array processing models with vector-sensor applications," *IEEE Transactions on Signal Processing*, vol. 44, pp. 83–95, January 1996.

B. Hochwald and A. Nehorai, "On identifiability and information-regularity in parameterized normal distributions," *Circuits, Systems, and Signal Processing*, vol. 16, pp. 83–89, January 1997.

B. Hochwald and A. Nehorai, "Magnetoencephalography with diversely-oriented and multi-component sensors," *IEEE Transactions on Biomedical Engineering*, vol. 44, pp. 40–50, January 1997.

B. Hochwald and K. Zeger, "Tradeoff between source and channel coding," *IEEE Transactions on Information Theory*, vol. 43, pp. 1412–1424, September 1997.

B. Hochwald, "Tradeoff between source and channel coding on a Gaussian channel." *IEEE Transactions on Information Theory*, vol. 44, pp. 3044–3055, November 1998.

B. Hochwald and P. Jelenković, "State Learning and Mixing in Entropy of Hidden Markov Processes and the Gilbert-Elliott Channel," *IEEE Transactions on Information Theory*, vol. 45, pp. 128–138, January 1999.

T. Marzetta and B. Hochwald, "Capacity of a mobile multiple-antenna communication link in Rayleigh flat fading," *IEEE Transactions on Information Theory*, vol. 45, pp. 139–157, January 1999.

B. Hochwald and T. Marzetta, "Unitary space-time modulation for multiple-antenna communications in Rayleigh flat fading," *IEEE Transactions on Information Theory*, vol. 46, pp. 543–564, March 2000.

B. Hochwald, T. Marzetta, T. Richardson, W. Sweldens, and R. Urbanke, "Systematic design of unitary space-time constellations," *IEEE Transactions on Information Theory*, vol. 46, pp. 1962–1973, September 2000.

B. Hochwald and W. Sweldens, "Differential unitary space-time modulation," *IEEE Transactions on Communications*, vol. 48, pp. 2041–2052, December 2000.

B. Hochwald and T. Marzetta, "Adapting a downlink array from uplink measurements," *IEEE Transactions on Signal Processing*, vol. 49, pp. 642–653, March 2001.

B. Hochwald, T. Marzetta, and C. Papadias, "A transmitter diversity scheme for wideband CDMA systems based on space-time spreading," *IEEE Journal on Selected Areas of Communication: Special Issue on Wideband CDMA*, vol. 19, pp. 48–60, March 2001.

A. Shokrollahi, B. Hassibi, B. Hochwald, and W. Sweldens, "Representation theory for high-rate multiple-antenna code design," *IEEE Transactions on Information Theory*, vol. 47, pp. 2335–2367, September 2001.

Journal Papers (cont'd)

B. Hochwald, T. Marzetta, and B. Hassibi, "Space-time autocoding," *IEEE Transactions on Information Theory*, vol. 47, pp. 2761–2781, November 2001.

T. Marzetta, B. Hassibi, and B. Hochwald, "Structured unitary space-time autocoding constellations," *IEEE Transactions on Information Theory*, vol. 48, pp. 942–950, April 2002.

B. Hassibi and B. Hochwald, "Cayley differential unitary space-time codes," *IEEE Transactions on Information Theory*, vol. 48, pp. 1485–1503, June 2002.

B. Hassibi and B. Hochwald, "High-rate codes that are linear in space and time," *IEEE Transactions on Information Theory*, vol. 48, pp. 1804–1824, July 2002.

N. Al-Dhahir, G. Giannakis, B. Hochwald, B. Hughes, and T. Marzetta, "Guest editorial," *IEEE Transactions on Signal Processing*, vol. 50, pp. 2381–2384, October 2002.

B. Hochwald and S. ten Brink, "Achieving near-capacity on a multiple-antenna channel," *IEEE Transactions on Communications*, vol. 53, pp. 389–399, March 2003.

B. Hassibi and B. Hochwald, "How much training is needed in multiple-antenna wireless links?" *IEEE Transactions on Information Theory*, vol. 49, pp. 951–963, April 2003.

B. Hochwald, G. Caire, B. Hassibi, and T. Marzetta, "The academic and industrial embrace of space-time methods," *IEEE Transactions on Information Theory: Special Issue on Space-Time Transmission, Reception, Coding and Signal Processing*, vol. 49, pp. 2329–2331, October 2003.

B. Hochwald, T. Marzetta, and V. Tarokh, "Multiple-antenna channel hardening and its implications for rate-feedback and scheduling," *IEEE Transactions on Information Theory*, vol. 50, pp. 1893–1909, September 2004.

H. Vikalo, B. Hassibi, B. Hochwald, and T. Kailath, "On the capacity of frequency-selective channels in training-based transmission schemes," *IEEE Transactions on Signal Processing*, vol. 52, pp. 2572–2583, September 2004.

D. Garrett, L. Davis, S. ten Brink, B. Hochwald, and G. Knagge, "Silicon complexity for maximum-likelihood MIMO detection using spherical decoding," *IEEE Journal of Solid State Circuits*, vol. 39, pp. 1544–1552, September 2004.

A. Alexiou, D. Avidor, P. Bosch, S. Das, P. Gupta, B. Hochwald, T. Klein, J. Ling, A. Lozano, T. Marzetta, S. Mukherjee, C. Papadias, R. Valenzuela, and H. Viswanathan, "Duplexing, resource allocation, and inter-cell coordination: design recommendations for next-generation wireless systems," *Wireless Communications and Mobile Computing*, vol. 5, pp. 77–93, May 2005.

T. Marzetta and B. Hochwald, "Fast transfer of channel state information in wireless systems," *IEEE Transactions on Signal Processing*, vol. 54, pp. 1268–1278, April 2006.

R. Gowaikar, B. Hochwald, and B. Hassibi, "Communication over a wireless network with random connections," *IEEE Transactions on Information Theory*, vol. 52, pp. 2857–2871, July 2006.

C. Peel, B. Hochwald and A. L. Swindlehurst, "A vector-perturbation technique for near-capacity multi-antenna multi-user communication—Part I: Channel inversion and regularization," *IEEE Transactions on Communications*, vol. 53, pp. 195–202, January 2005. **Winner of the 2006 IEEE Transactions on Communications Stephen O. Rice Best Paper Award.**

Journal Papers (cont'd)

B. Hochwald, C. Peel, and A. L. Swindlehurst, "A vector-perturbation technique for near-capacity multi-antenna multi-user communication—Part II: Perturbation," *IEEE Transactions on Communications*, vol. 53, pp. 537–544, March 2005. **Winner of the 2006 IEEE Transactions on Communications Stephen O. Rice Best Paper Award.**

A. Ashikhmin, A. van Wijngaarden, Z. Haibo, B. Hochwald, T. Marzetta, V. Purohit, C. Qinghong, P. Wilford, S-R. Zhou, M. Zuniga, E. Zuranski, "Design and development of a terrestrial digital video broadcast demodulation core: An international collaborative effort," *Bell Labs Technical Journal*, vol. 12, pp. 97–118, 2007.

B. Hochwald and H. Artés, "Orthogonalizing beams to train unscheduled terminals," *IEEE Transactions on Signal Processing*, vol. 57, pp. 3063–3074, August 2009.

E. Stauffer and B. Hochwald, "Low-complexity multi-stream space-time codes—Part I: Direct-sum codes and design criteria," *IEEE Transactions on Communications*, vol. 60, pp. 81–88, January 2012.

B. Hochwald and E. Stauffer, "Low-complexity multi-stream space-time codes—Part II: Unitary-transform codes," *IEEE Transactions on Communications*, vol. 60, pp. 375–383, February 2012.

D. Nie, B. Hochwald, and E. Stauffer, "Systematic design of large-scale multiport decoupling networks," *IEEE Transactions on Circuits and Systems I: Regular Papers*, vol. 61, pp. 2172–2181, July 2014.

B. Hochwald, D. Love, S. Yan, P. Fay, J-M. Jin, "Incorporating specific absorption rate constraints into wireless signal design," *IEEE Communications Magazine*, vol. 52, pp. 126–133, September, 2014.

D. Nie and B. Hochwald, "Broadband matching bounds for coupled loads," *IEEE Transactions of Circuits and Systems I: Regular Papers*, vol. 62, pp. 995–1004, April 2015. **Winner of the 2016 IEEE Transactions on Circuits and Systems Best Paper Award by a Young Author.**

D. Ying, D. Love, and B. Hochwald, "Closed-loop precoding and capacity analysis for multiple antenna wireless systems with user radiation exposure constraints," *IEEE Transactions on Wireless Communications*, vol. 14, pp. 5859–5870, October 2015.

D. Nie and B. Hochwald, "Bandwidth analysis of multiport radio-frequency systems—Part I," *IEEE Transactions on Antennas and Propagation*, vol. 65, pp. 1081–1092, March 2017. **Winner of the 2018 IEEE Transactions on Antennas and Propagation H. A. Wheeler Prize Paper Award.**

D. Nie and B. Hochwald, "Bandwidth analysis of multiport radio-frequency systems—Part II," *IEEE Transactions on Antennas and Propagation*, vol. 65, pp. 1093–1107, March 2017.

D. Ying, D. Love, and B. Hochwald, "Sum-rate analysis for multi-user MIMO systems with user exposure constraints," *IEEE Transactions on Wireless Communications*, vol. 16, pp. 7376–7388, November 2017.

D. Nie and B. Hochwald, "Improved broadband matching bound," *IEEE Transactions on Antennas and Propagation*, vol. 65, pp. 5878–5885, November 2017.

J. Li, S. Yan, Y. Liu, B. Hochwald, and J-M. Jin, "A high-order model for fast estimation of electromagnetic absorption induced by multiple transmitters in portable devices," *IEEE Transactions on Antennas and Propagation*, vol. 65, pp. 6768–6778, December 2017.

A. Ebadi-Shahrivar, P. Fay, D.J. Love, and B. Hochwald, "Determining electromagnetic exposure compliance of multi-antenna devices in linear time," *IEEE Transactions on Antennas and Propagation*, vol. 67, pp. 7585–7596, December 2019.

Journal Papers (cont'd)

M. Castellanos, Y. Liu, D. Love, B. Peleato, J.-M. Jin, and B. Hochwald, "Signal-level models of pointwise electromagnetic exposure for millimeter-wave communication," *IEEE Transactions on Antennas and Propagation*, pp. 3963–3977, May 2020.

A. Molev-Shteiman, X-F. Qi, L. Mailander, N. Prasad, and B. Hochwald, "New equivalent model of a quantizer with noisy input and its applications for MIMO system analysis and design," *IEEE Access*, September 2020.

M. Castellanos, D. Ying, D. Love, B. Peleato, and B. Hochwald, "Dynamic electromagnetic exposure allocation for Raleigh fading MIMO channels," *IEEE Transactions on Wireless Communications*, pp. 728–740, February 2021.

N. Estes, K. Gao, B. Hochwald, J. N. Laneman, and J. Chisum, "Efficient modeling of low-resolution millimeter-wave transceivers for massive MIMO wireless communications systems," *Microwave and Optical Technology Letters*, pp. 1134–1140, April 2021.

N. Kleber, J. Chisum, B. Hochwald, J. N. Laneman, "Three-dimensional RF sensor networks for widespread spectrum monitoring," *IEEE Transactions on Cognitive Communications and Networking*, pp. 763–777, vol. 8, no. 2, June 2022.

N. Kleber, M. Haenggi, J. Chisum, B. Hochwald, J. N. Laneman, "Directivity in RF sensor networks for widespread spectrum monitoring," *IEEE Transactions on Cognitive Communications and Networking*, pp. 778–792, vol. 8, no. 2, June 2022.

K. Gao, X. Meng, J.N. Laneman, J. Chisum, R. Bendlin, A. Chopra, B. Hochwald, "A training-based mutual information lower bound for large-scale systems," *IEEE Transactions on Communications,* pp. 5151–5163, vol. 70, no. 8, August 2022.

N. Estes, X. Kang, X. Meng, R. Bendlin, A. Chopra, J.N. Laneman, B. Hochwald, J. Chisum, "A 0.71mW antenna-coupled on-off-key receiver for Gbps millimeter-wave wireless communication," *IEEE Transactions on Microwave Theory and Techniques,* vol. 71, no. 4, April 2023.

Conference Papers

B. Hochwald and A. Nehorai, "Minimum bias priors for estimating additive terms in state-space models," *Proceedings of the Twenty-Sixth Asilomar Conference on Signals, Systems, and Computers*, pp. 836–840, Pacific Grove, CA, October 1992 (Invited).

B. Hochwald and A. Nehorai, "Electromagnetic vector sensors and active target localization and identification," *IEEE International Conference on Acoustics, Speech, and Signal Processing*, pp. IV 25–28, Minneapolis, MN, April 1993.

B. Hochwald and A. Nehorai, "Identifiability in array processing models with vector-sensor applications," *Proceedings of the IEEE Seventh Signal Processing Workshop on Statistical Signal and Array Processing*, pp. 121–124, Québec City, Canada, June 1994.

B. Hochwald and A. Nehorai, "Polarimetric modeling and parameter estimation with electromagnetic vector sensors," *Proceedings of the 1994 IEEE International Geoscience and Remote Sensing Symposium*, pp. 1129–1132, Caltech, Pasadena, CA, August 1994 (Invited).

B. Hochwald and A. Nehorai, "Optimizing an array of sensors for magnetoencephalography," *Proceedings of the 17th Annual International Conference of the IEEE Engineering in Medicine and Biology Society*, pp. 861–862, Montréal, Canada, September 1995.

B. Hochwald and K. Zeger, "Bounds on the tradeoff between source and channel coding with a delay constraint," *Proceedings of 1996 International Symposium on Information Theory and its Applications*, pp. 755–758, Victoria, Canada, September 1996.

B. Hochwald and K. Zeger, "Tradeoff between source and channel coding," *Proceedings of 1997 International Symposium on Information Theory*, pg. 335, Ulm, Germany, June 1997.

B. Hochwald and T. Marzetta, "Multiple-antenna communications when nobody knows the Rayleigh fading coefficients," *Proceedings of Thirty-Fifth Annual Allerton Conference on Communication, Control and Computing*, pp. 1033–1042, Monticello, IL, September 1997.

B. Hochwald and P. Jelenković, "The role of memory in entropy approximation for hidden Markov models," *Proceedings of Thirty-Fifth Annual Allerton Conference on Communication, Control and Computing*, pp. 1013–1022, Monticello, IL, September 1997.

T. Marzetta and B. Hochwald, "Fundamental limitations on multiple-antenna wireless links in Rayleigh fading," *Proceedings of 1998 International Symposium on Information Theory*, pg. 310, Boston, MA, August 1998.

B. Hochwald, "Source and channel coding tradeoff on a Gaussian channel," *Proceedings of 1998 International Symposium on Information Theory*, pg. 248, Boston, MA, August 1998.

B. Hochwald and T. Marzetta, "Space-time modulation scheme for unknown Rayleigh fading environments," *Proceedings of Thirty-Sixth Annual Allerton Conference on Communication, Control and Computing*, pp. 431–440, Monticello, IL, September 1998.

B. Hochwald and T. Marzetta, "Space-time modulation for unknown fading," *Proceedings of SPIE, Digital Wireless Communication*, pp. 10–19, Orlando, FL, April 1999.

B. Hochwald, C. Papadias, T. Marzetta, M. Buehrer and R. Soni, "Space-time spreading for CDMA systems," *Sixth workshop on Smart Antennas in Wireless Mobile Communications*, Stanford University, Stanford, CA, July 1999.

Conference Papers (cont'd)

B. Hochwald and W. Sweldens, "Multiple-antenna differential modulation," *Proceedings of Thirty-Seventh Annual Allerton Conference on Communication, Control, and Computing*, pp. 1266–1273, Monticello, IL, September 1999.

B. Hochwald, T. Marzetta, and C. Papadias, "A novel space-time spreading scheme for wireless CDMA systems," *Proceedings of Thirty-Seventh Annual Allerton Conference on Communication, Control, and Computing*, pp. 1284–1293, Monticello, IL, September 1999.

T. Marzetta, B. Hochwald, and B. Hassibi, "A new approach to single-user multiple-antenna wireless communication," *Proceedings of the 2000 Conference on Information Sciences and Systems*, pp. WA4-16–WA4-21, Princeton, NJ, March 2000.

T. Marzetta, B. Hochwald, and B. Hassibi, "Space-time autocoding: arbitrarily reliable communication in a single fading interval," *Proceedings of the 2000 International Symposium on Information Theory*, pg. 313, Sorrento, Italy, June 2000.

B. Hassibi, B. Hochwald, A. Shokrollahi, and W. Sweldens, "Multiple antennas and representation theory," *Proceedings of the 2000 International Symposium on Information Theory*, pg. 337, Sorrento, Italy, June 2000.

B. Hochwald and W. Sweldens, "A method of differential transmission with multiple antennas," *Proceedings of the IEEE Sixth International Symposium on Spread-Spectrum Techniques and Applications*, pg. 122, Parsippany, NJ, September 2000.

B. Hassibi, B. Hochwald, A. Shokrollahi, and W. Sweldens, "Codes for differential signaling with many antennas," *Wireless Communications and Networking Conference*, pp. 23–24, vol. 1, 2000.

B. Hassibi and B. Hochwald, "Optimal training in space-time systems," *Conference Record of the Thirty-Fourth Asilomar Conference on Signals, Systems and Computers*, pp. 743–747, vol. 1, Asilomar, CA, October 2000.

B. Hassibi and B. Hochwald, "High-rate linear space-time codes," *Proceedings of the Thirty-Eighth Annual Allerton Conference on Communication, Control and Computing*, pp. 1047–1056, Monticello, IL, October 2000.

H. Vikalo, B. Hassibi, B. Hochwald, and T. Kailath, "Optimal training for frequency-selective fading channels," *Proceedings of the 2001 IEEE International Conference on Acoustics, Speech and Signal Processing*, pp. 2105–2108, vol. 4, Salt Lake City, UT, May 2001.

B. Hassibi and B. Hochwald, "High-rate linear space-time codes," *Proceedings of the 2001 IEEE International Conference on Acoustics, Speech and Signal Processing*, pp. 2461–2464, vol. 4, Salt Lake City, UT, May 2001.

B. Hassibi and B. Hochwald, "Linear dispersion codes," *Proceedings of the IEEE International Symposium on Information Theory*, pg. 325, Washington, D.C., June 2001.

T. Marzetta, B. Hassibi, and B. Hochwald, "Space-time autocoding constellations with pairwise-independent signals," *Proceedings of the IEEE International Symposium on Information Theory*, pg. 326, Washington, D.C., June 2001.

B. Hochwald and S. ten Brink, "Iterative list sphere decoding to attain capacity on a multi-antenna link," *Proceedings of the Thirty-Ninth Annual Allerton Conference on Communication, Control and Computing*, pp. 815–824, Monticello, IL, October 2001.

Conference Papers (cont'd)

B. Hochwald and B. Hassibi, "Cayley codes for multi-antenna differential modulation," *Conference Record of the Thirty-Fifth Asilomar Conference on Signals, Systems and Computers*, pp. 232–235, vol. 1, Asilomar, CA, October 2001.

V. Tarokh and B. Hochwald, "Existence and construction of block interleavers," *IEEE International Conference on Communications*, pp. 1855–1857, vol. 3, New York, NY, April 2002.

S. ten Brink and B. Hochwald, "Detection thresholds of iterative MIMO processing," *Proceedings of the 2002 International Symposium on Information Theory*, pg. 22, Lausanne, Switzerland, June 2002.

B. Hochwald and S. Vishwanath, "Space-Time Multiple Access: Linear growth in the sum-rate," *Proceedings of the Fortieth Annual Allerton Conference on Communication, Control and Computing*, Monticello, IL, October 2002.

B. Hochwald, T. Marzetta, and V. Tarokh, "Multi-antenna channel hardening and its implications for rate feedback and scheduling," *DIMACS Workshop on Signal Processing for Wireless Transmission*, Piscataway, NJ, October 2002.

D. Garrett, L. Davis, B. Hochwald, and S. ten Brink, "APP processing for high-performance MIMO systems," *Proceedings of the Twenty-Fifth IEEE Custom Integrated Circuits Conference*, San Jose, CA, September 2003.

B. Hochwald, C. Peel, and L. Swindlehurst, "Achieving near-capacity in multi-antenna multi-user systems," *Proceedings of the Forty-First Annual Allerton Conference on Communication, Control and Computing*, Monticello, IL, October 2003.

T. Marzetta and B. Hochwald, "Learning the channel at the transmitter," *Proceedings of the Forty-Second Annual Allerton Conference on Communication, Control and Computing*, Monticello, IL, October 2004.

R. Gowaikar, B. Hochwald and B. Hassibi, "An Achievability result for random networks," *Proceedings of the 2005 International Symposium on Information Theory*, Adelaide, Australia, September 2005.

C. Yuen and B. Hochwald, "Dropping users in a multi-antenna broadcast channel," *Proceedings of the Information Theory and Applications Workshop*, San Diego, CA, February 2006.

R. Gowaikar, B. Hochwald and B. Hassibi, "Throughput scaling in random wireless networks," *Proceedings of the Information Theory and Applications Workshop*, San Diego, CA, February 2006.

C. Yuen and B. Hochwald, "How to gain 1.5 dB in vector precoding" *Proceedings of the 2006 IEEE Global Telecommunications Conference*, San Francisco, CA, November 2006.

D. Love, B. Hochwald and K. Krishnamurthy, "Exchanging third-party information in a network," *Proceedings of the Information Theory and Applications Workshop*, San Diego, CA, February 2007.

B. Hochwald and H. Artés, "Orthogonalizing a random set of beams," *Proceedings of the Information Theory and Applications Workshop*, San Diego, CA, February 2008.

E. Stauffer and B. Hochwald, "Low-complexity space-time codes for high and low-priority streams," *Proceedings of the Information Theory and Applications Workshop*, San Diego, CA, February 2009.

A. Jalali, D. Love, S. Sanghavi, and B. Hochwald, "Conferencing on trees," *Proceedings of Conference on Information Sciences and Systems*, Baltimore, MD, pp. 763-768, March 18-20, 2009.

Conference Papers (cont'd)

L. Jalloul, N. Czink, B. Hochwald, and A. Paulraj, "Why downlink cyclic delay diversity helps uplink transmit diversity," *Proceedings of the 69th IEEE Vehicular Technology Conference*, Barcelona, Spain, April 2009.

B. Hochwald and L. Jalloul, "Statistical distributions that arise in constrained beamforming with incomplete channel information," *Proceedings of the Information Theory and Applications Workshop*, San Diego, CA, February 2010.

B. Hochwald and D. Love, "Minimizing exposure to electromagnetic radiation in portable devices," *Proceedings of the Information Theory and Applications Workshop*, San Diego, CA, February 2012.

B. Hochwald, D. Love, S. Yan and J-M. Jin, "SAR codes," *Proceedings of the Information Theory and Applications Workshop*, San Diego, CA, February 2013.

D. Ying, D. Love and B. Hochwald, "Beamformer optimization with a constraint on user electromagnetic exposure," *Proceedings of 2013 47th Annual Conference on Information Sciences and Systems*, March 2013, pp. 1–6.

D. Ying, D. Love and B. Hochwald, "Transmit covariance optimization with a constraint on user electromagnetic radiation exposure," *Proceedings 2013 Globecom Wireless Communications Symposium*, December 2013, pp. 4104–4109.

D. Nie, B. Hochwald, and E. Stauffer, "Electromagnetic decoupling and complexity," *Proceedings of the Information Theory and Applications Workshop*, San Diego, CA, February 2014 (Invited).

D. Nie, B. Hochwald, and E. Stauffer, "Minimum complexity decoupling networks for arbitrary coupled loads," *Proceedings of the 2014 International Symposium on Antennas and Propagation*, Memphis, TN, July 2014, pp. 460–461.

D. Nie and B. Hochwald, "Bandwidth analysis of low-complexity decoupling networks for multiple coupled antennas," *Proceedings of the Forty-Eighth Asilomar Conference on Signals, Systems, and Computers*, Pacific Grove, CA, November 2014 (Invited), pp. 1076–1082.

D. Nie and B. Hochwald, "Bandwidth bounds for matching coupled loads," *Proceedings of the 2015 IEEE International Symposium on Circuits and Systems*, Lisbon, Portugal, May 2015, pp. 137–140.

D. Nie and B. Hochwald, "Bandwidth upper bounds for matching coupled loads," *Proceedings of the 2015 IEEE International Symposium on Antennas and Propagation*, Vancouver, BC, July 2015, pp. 1394–1395.

A. Termos and B. Hochwald, "Capacity benefits of antenna coupling," *Proceedings of the Information Theory and Applications Workshop*, San Diego, CA, February 2016 (Invited).

D. Nie and B. Hochwald, "Bandwidth as a function of number of sources and loads in multiport radio-frequency systems," *Proceedings of the 2016 IEEE Internation Symposium on Antennas and Propagation*, Fajardo, Puerto Rico, June 2016.

D. Nie and B. Hochwald, "Improved Bode-Fano broadband matching bound," *Proceedings of the 2016 IEEE International Symposium on Antennas and Propagation*, Fajardo, Puerto Rico, June 2016. **Winner of the 2016 International Symposium on Antennas and Propagation Student Paper Competition.**

B. Hochwald and D. Nie, "Bandwidth-multiplexing tradeoff in multi-antenna systems," *Proceedings of the 2016 Antenna Applications Symposium*, Monticello, IL, September 2016, pp. 295–308.

Conference Papers (cont'd)

M. Castellanos, D. Love and B. Hochwald, "'Hybrid precoding for millimeter wave systems with a constraint on user electromagnetic radiation exposure," *Proceedings of IEEE Asilomar Conference on Signals, Systems, and Computers*, Pacific Grove, CA, Nov. 6–9, 2016 (Invited).

M. Cai, K. Gao, D. Nie, B. Hochwald and J. N. Laneman, "Effect of wideband beam squint on codebook design in phased-array wireless systems," *Proceedings of 2016 IEEE Global Communications Conference (GLOBECOM)*, Washington D.C., December 2016.

K. Gao, M. Cai, D. Nie, B. Hochwald and J. N. Laneman, "Beampattern-based tracking for millimeter wave communication systems," *Proceedings of 2016 IEEE Global Communications Conference (GLOBECOM)*, Washington D.C., December 2016.

K. Gao, N. Estes, B. Hochwald, J. Chisum and J. N. Laneman, "Power-performance analysis of a simple one-bit transceiver," *Proceedings of the 2017 Information Theory and Applications Workshop*, San Diego, CA, February 2017.

N. Kleber, A. Termos, G. Martinez, J. Merritt, B. Hochwald, J. Chisum, A. Striegel and J. N. Laneman, "RadioHound: A pervasive sensing network for sub-6 GHz dynamic spectrum monitoring," *IEEE International Symposium on Dynamic Spectrum Access Networks,* Baltimore, MD, March 2017.

A. Ebadi-Shahrivar, J. Ren, B. Hochwald and P. Fay, "Mixed quadratic model for peak spatial average SAR of coherent multiple antennas devices," *Proceedings of the IEEE AP-S Symposium on Antennas and Propagation and USNC-URSI Radio Science Meeting*, San Diego, July 9–14, 2017.

J. Li, S. Yan, Y. Liu, B. Hochwald and J-M. Jin, "A high-order model for fast estimation of specific absorption rate induced by multiple transmitters in portable devices," *Proceedings of the IEEE AP-S Symposium on Antennas and Propagation and USNC-URSI Radio Science Meeting*, San Diego, July 9–14, 2017.

M. Cai, J. N. Laneman, B. Hochwald, "Carrier aggregation for phased-array analog beamforming with beam squint," *Proceedings of 2017 IEEE Global Communications Conference (GLOBECOM)*, Singapore, December 2017.

K. Gao, J. N. Laneman and B. Hochwald, "Beamforming with multiple one-bit wireless transceivers," *Proceedings of the 2018 Information Theory and Applications Workshop*, San Diego, CA, February 2018.

K. Gao, J. N. Laneman, and B. Hochwald "Capacity of multiple one-bit transceivers in a Rayleigh environment," *Proceedings of the 2018 IEEE Wireless Communications and Networking conference*, Barcelona, April 2018.

A. Ebadi-Shahrivar, P. Fay, D. J. Love, and B. Hochwald, "Multi-antenna SAR estimation in linear time," *Proceedings of the 2018 IEEE International Symposium on Antennas and Propagation*, Boston, July 2018.

K. Gao, J. N. Laneman, N. Estes, J. Chisum, and B. Hochwald, "Training for channel estimation in nonlinear multi-antenna transceivers," *Proceedings of the 2019 Information Theory and Applications Workshop*, San Diego, CA, February 2019.

A. Ebadi-Shahrivar, P. Fay, D.J. Love, and B. Hochwald, "Codebook requirements for estimating multi-antenna SAR in linear time," *Proceedings of the 2019 IEEE International Symposium on Antennas and Propagation*, Atlanta, GA, July 2019.

Conference Papers (cont'd)

K. Gao, J. N. Laneman, N. Estes, J. Chisum, and B. Hochwald, "Channel estimation with one-bit transceivers in a Rayleigh environment," *Proceedings of 2019 IEEE Global Communications Conference (GLOBECOM)*, Waikoloa, Hawaii, December 2019.

A. Termos and B. Hochwald, "Robust Neural Network-Based Spectrum Occupancy Mapping," *IEEE International Symposium on New Frontiers in Dynamic Spectrum Access Networks*, December 2021.

X. Meng, N. Estes, J.N. Laneman, J. Chisum, R. Bendlin, B. Hochwald, "Spectral efficiency with one-bit transmitters under out-of-band power constraints," *Proceedings of the 2022 IEEE Global Communications Conference (GLOBECOM)*, Rio de Janeiro, Brazil, December 2022.

Appendix B

List of Materials Considered

Exhibit ("Ex.")	Description
1001	U.S. Patent No. 9,313,809 ("'809")
1002	File History of U.S. Application No. 14/319,608 ("'809 FH)
1004	Declaration of Friedhelm Rodermund in Support of Petition for *Inter Partes* Review of U.S. Patent No. 9,313,809 ("Rodermund")
1005	U.S. Patent Application Publication No. 2009/0225709 ("Wager")
1006	U.S. Provisional Application No. 61/015,316 ("Wager-Prov.")
1007	International Publication No. WO 2007/078155 ("Lee")
1008	R2-073254, *Further discussion on enhanced CELL_FACH in REL8* ("R2-073254" or "Nokia")
1009	3GPP Technical Specification TS 25.321 v7.5.0 (2007-06) ("TS25.321")
1010	U.S. Patent Application Publication No. 2006/0176845 ("Sarkkinen")
1011	3GPP Technical Specification TS 25.331 v7.5.0 (2007-06) ("TS25.331")
1012	U.S. Patent Application Publication No. 2006/0251027 ("Chun")
1013	U.S. Patent Application Publication No. 2009/0131052 ("Hakola")
1014	U.S. Provisional Application No. 60/985,537 ("Hakola-Prov.")
1015	International Publication No. WO 2008/081222 ("Lindskog")
1016	International Publication No. WO 2005/018241 ("Seidel")

Exhibit ("Ex.")	Description
1017	U.S. Patent Application Publication No. 2009/0006778 ("Sidi")
1018	U.S. Patent Publication No. 2005/0276266 ("Terry-266")
1019	WO Patent Application 2009/022855 ("Sung")
1020	U.S. Patent Publication No. 2005/0251722 ("Terry-722")
1026	U.S. Patent No. 8,774,104 ("'104")
1027	File History of U.S. Application No. 12/238,910 ("'104FH")
1028	U.S. Provisional Application No. 60/982,528 ("'528-Prov.")
1029	U.S. Provisional Application No. 60/975,985 ("'985-Prov.")
1033	Joint Claim Construction and Prehearing Statement, *Pantech Corp. et al. v. LG Electronics Inc. et al.*, Case 5:22-cv-00113-RWS-JBB (E.D. Texas), Dkt. No. 118.
1034	University of Notre Dame, Wireless Institute, "RadioHound: Distributed Spectrum Sensing"
1035	3GPP, "Introducing 3GPP"
1036	3GPP, "About 3GPP"
1037	3GPP, "Specifications Per TSG Round"
1038	ShareTechnote, "4G/LTE RACH"
1039	3GPP, "36.321"
1040	3GPP Technical Specification TS 36.321 v8.0.0 (2007-12) ("TS36.321")
1041	U.S. Patent No. 6,363,121

Appendix C

LIST OF CHALLENGED CLAIMS:

Element [1.pre]: A method performed by a wireless transmit/receive unit (WTRU) to communicate with a base station using an enhanced dedicated channel (E-DCH) resource while in a cell forward access channel (CELL_FACH) state, the method comprising:

Element [1.a]: determining if a E-DCH buffer is empty;

Element [1.b]: transmitting to the base station scheduling information (SI), wherein the SI includes a total E-DCH buffer status (TEBS) equal to zero when the E-DCH buffer is determined to be empty;

Element [1.c]: determining if a hybrid automatic repeat request (HARQ) buffer is empty; and

Element [1.d]: releasing the E-DCH resource when the transmission of the SI with the TEBS equal to zero has been made and the HARQ buffer is empty.

Claim 2: The method as in claim 1, further comprising starting an inactivity timer when the E-DCH buffer is empty.

Claim 3: The method as in claim 2, further comprising triggering the transmission of the SI when the inactivity timer expires.

Claim 4: The method as in claim 1, further comprising transmitting using the E-DCH resource when a response is received on an E-DCH acquisition indication channel (E-AICH) to a preamble transmitted by the WTRU.

Claim 5: The method as in claim 1, further comprising completing an E-DCH transmission when a cell reselection or a radio link failure occurs.

Element [6.pre]: A wireless transmit/receive unit (WTRU) capable of communicating with a base station using an enhanced dedicated channel (E-DCH) resource while in a cell forward access channel (CELL_FACH) state, the WTRU comprising:

Element [6.a]: a E-DCH buffer;

Element [6.b]: a transmitter;

Element [6.c]: a hybrid automatic repeat request (HARQ) buffer; and

Element [6.d]: a processor; wherein the processor:

Element [6.e]: determines if the E-DCH buffer is empty;

Element [6.f]: causes the transmitter to transmit to the base station scheduling information (SI), wherein the SI includes a total E-DCH buffer status (TEBS) equal to zero for the E-DCH buffer when the processor has determined that the E-DCH buffer is empty;

Element [6.g]: determines if the HARQ buffer is empty; and

Element [6.h]: releases the E-DCH resource when the transmission of the SI with the TEBS equal to zero has been made and the HARQ buffer is empty.

Claim 7: The WTRU as in claim 6, wherein the processor completes an E-DCH transmission when a cell reselection or a radio link failure occurs.

Claim 8: The WTRU as in claim 6, wherein the processor starts an inactivity timer when the E-DCH buffer is empty.

Claim 9: The WTRU as in claim 8, wherein the transmitter transmits the SI when the inactivity timer expires.

Claim 10: The WTRU as in claim 6, wherein the transmitter transmits using the E-DCH resource when a response is received on an E-DCH acquisition indication channel (E-AICH) to a preamble transmitted by the WTRU.