US 20040100479A1

(19) United States

(12) Patent Application Publication (10) Pub. No.: US 2004/0100479 A1

Nakano et al. (43) Pub. Date: May 27, 2004

(54) PORTABLE INFORMATION TERMINAL, DISPLAY CONTROL DEVICE, DISPLAY CONTROL METHOD, AND COMPUTER READABLE PROGRAM THEREFOR

(76) Inventors: **Masao Nakano**, Kanagawa (JP); **Masao Nakazawa**, Kanagawa (JP); **Yoshio Sasaki**, Kanagawa (JP); **Eiji Takeuchi**, Kanagawa (JP); **Yosuke Miho**, Kanagawa (JP); **Hajime Ishikawa**, Kanagawa (JP); **Takeo Kobayashi**, Kanagawa (JP); **Tomoki Myoi**, Kanagawa (JP); **Hiroshi Kasakawa**, Kanagawa (JP); **Akiko Watanabe**, Kanagawa (JP); **Shinsuke Sato**, Kanagawa (JP)

Correspondence Address:
SCHULTE ROTH & ZABEL LLP
ATTN: JOEL E. LUTZKER
919 THIRD AVENUE
NEW YORK, NY 10022 (US)

(21) Appl. No.: **10/435,709**

(22) Filed: **May 9, 2003**

(30) **Foreign Application Priority Data**

Jul. 30, 2002	(JP)	2002-221746
May 13, 2002	(JP)	2002-137465
May 13, 2002	(JP)	2002-137525
Jul. 30, 2002	(JP)	2002-221747

Publication Classification

(51) **Int. Cl.**[7] **G09G 5/00**

(52) **U.S. Cl.** **345/700**

(57) **ABSTRACT**

Predetermined travel locuss are set in a three-dimensional virtual space. Menu panels for displaying menu items are arranged along the travel locuss assuming a display position set as a local origin so that the normal to each LCD panel will face a virtual camera. The transparency of a menu panel is raised in accordance with its distance to the virtual camera. In case a scroll operation is performed, menu panels are moved along the travel locuss connecting display positions P until a selected specific menu panel reaches the display position **P0.** A display screen on a portable information terminal is drawn as a screen image V shot with the virtual camera and menu panels are three-dimensionally displayed in rolls.

An LCD panel includes an LCD display panel functioning as a display section integral with a transparent touch panel functioning as an input section overlaid on the LCD display panel. By sliding a stylus pen on the LCD panel, that is, by dragging the stylus pen, the menu screen displayed on the LCD panel scrolls at a velocity corresponding to the drag velocity. When the stylus pen is released from the LCD panel **11**, that is, performing a tap-out, an application program corresponding to the menu display entity (cross-hatched) is activated.

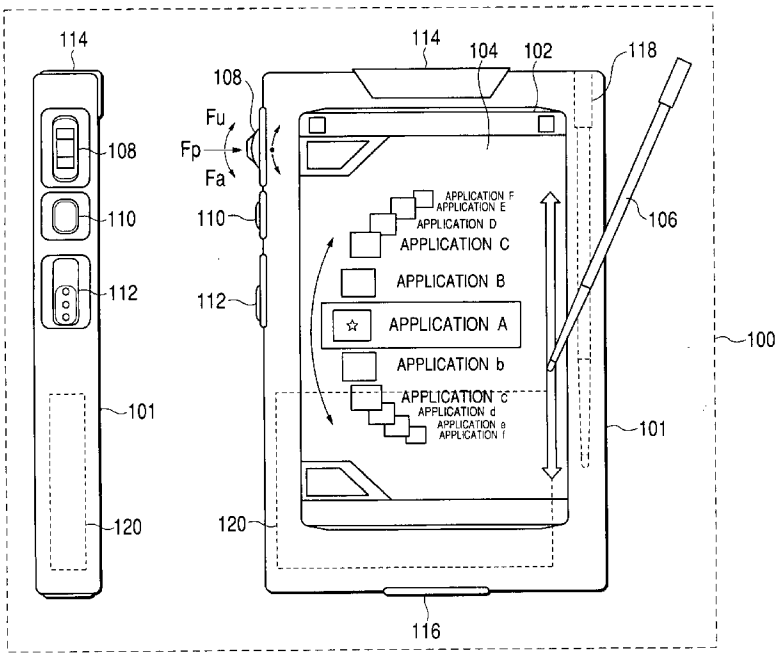

FIG. 1

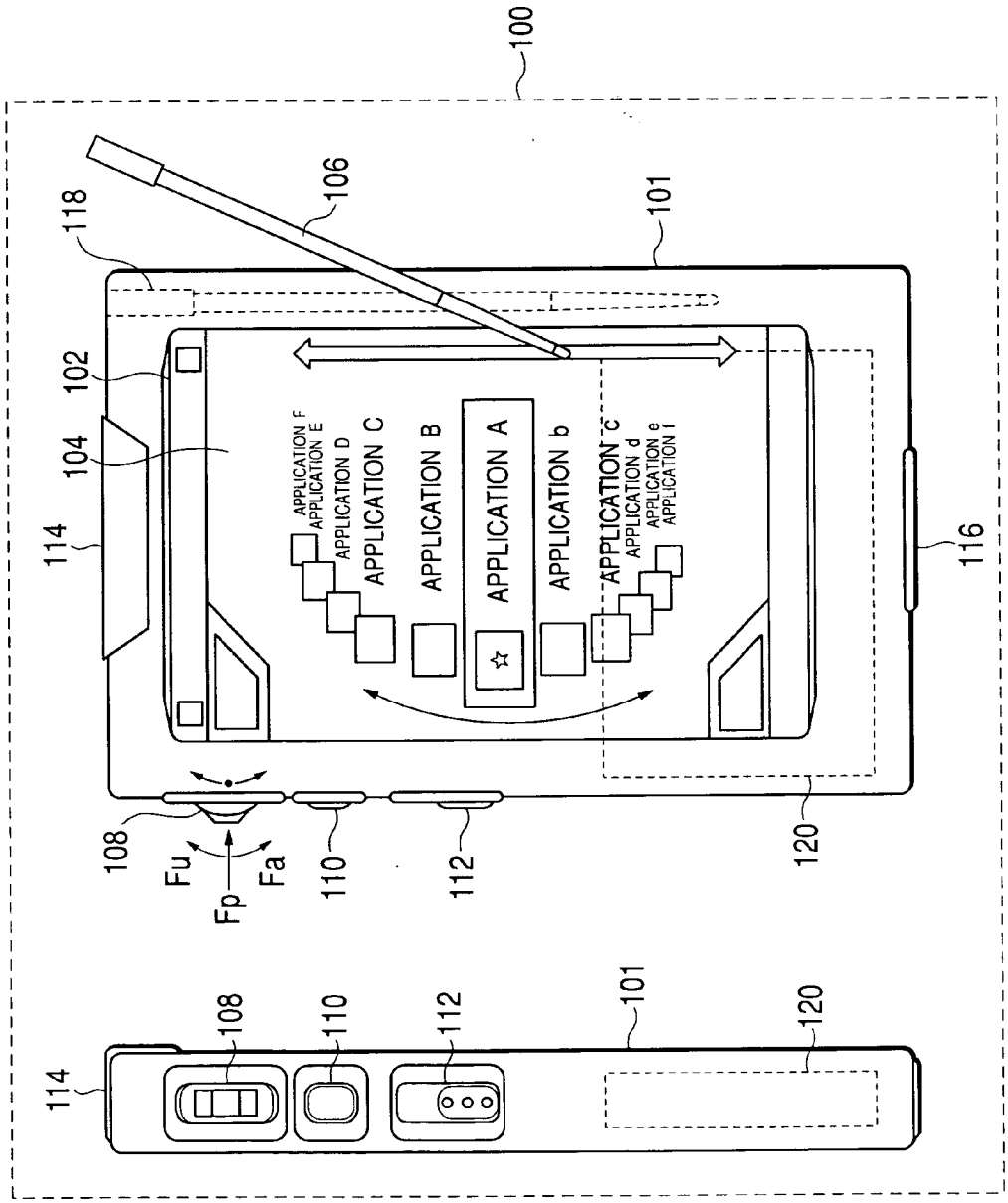
100
101
102
104
106
108
110
112
114
116
118
120
Fu
Fp
Fa
APPLICATION F
APPLICATION E
APPLICATION D
APPLICATION C
APPLICATION B
APPLICATION A
APPLICATION b
APPLICATION c
APPLICATION d
APPLICATION e
APPLICATION f

FIG. 2A

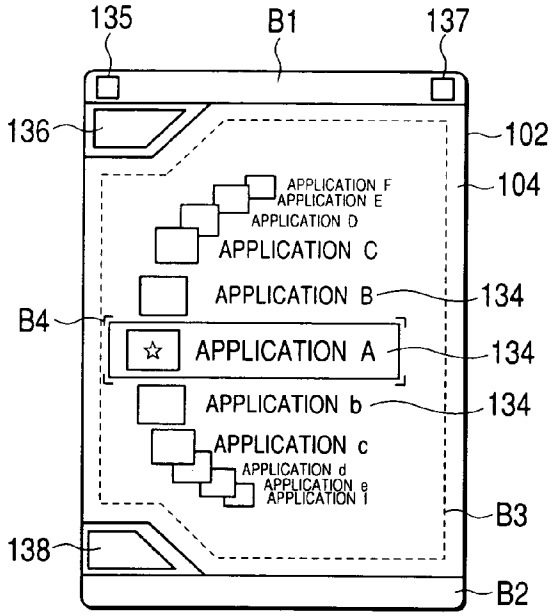

FIG. 2B

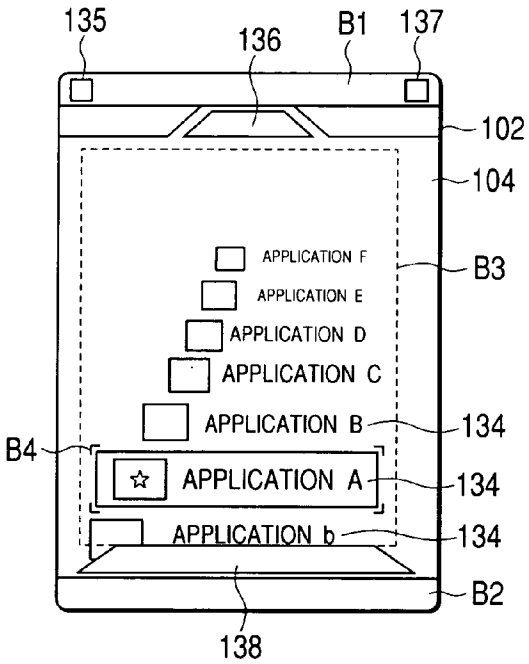

FIG. 2C

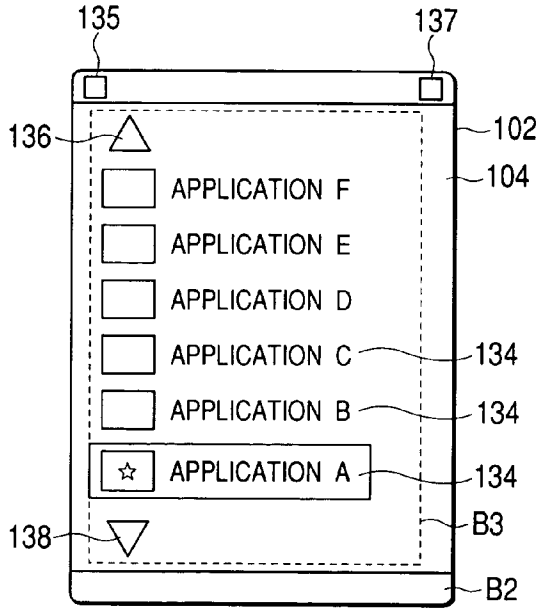

FIG. 2D

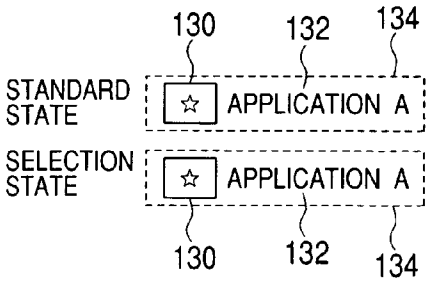

FIG. 3

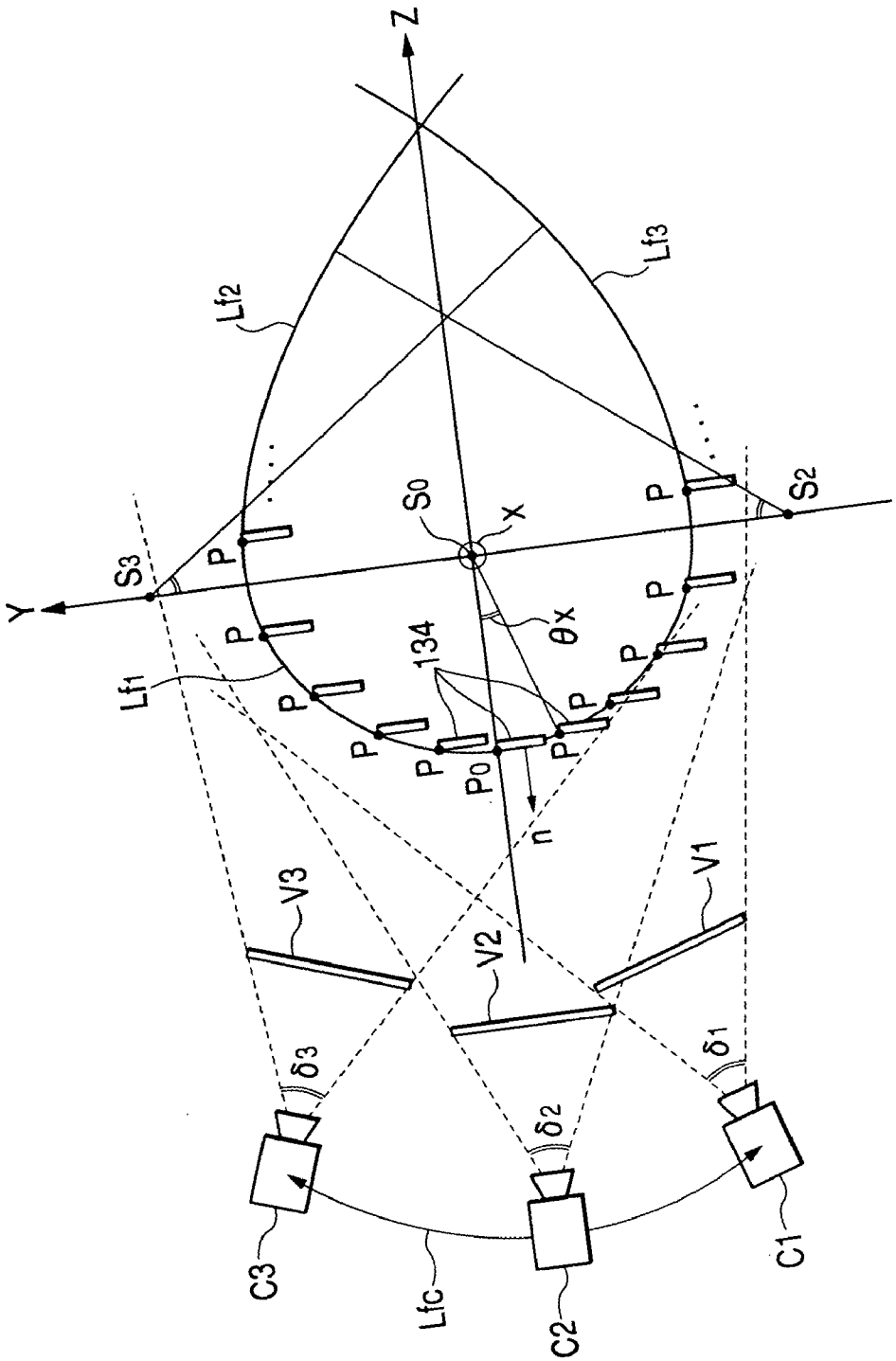

FIG. 4

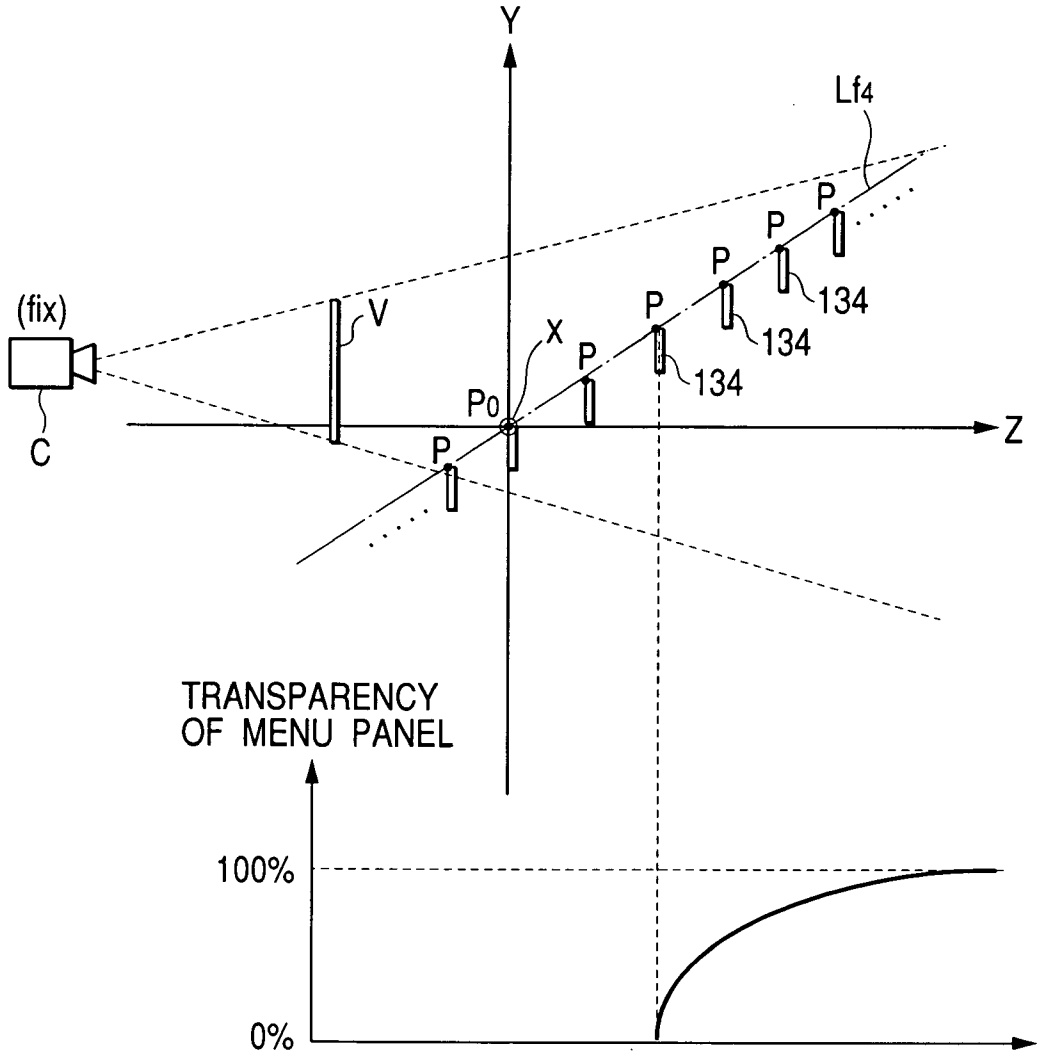
Y
Lf4
P
P
P
P
P
P
134
134
134
(fix)
V
X
P0
C
Z
TRANSPARENCY
OF MENU PANEL
100%
0%

FIG. 5

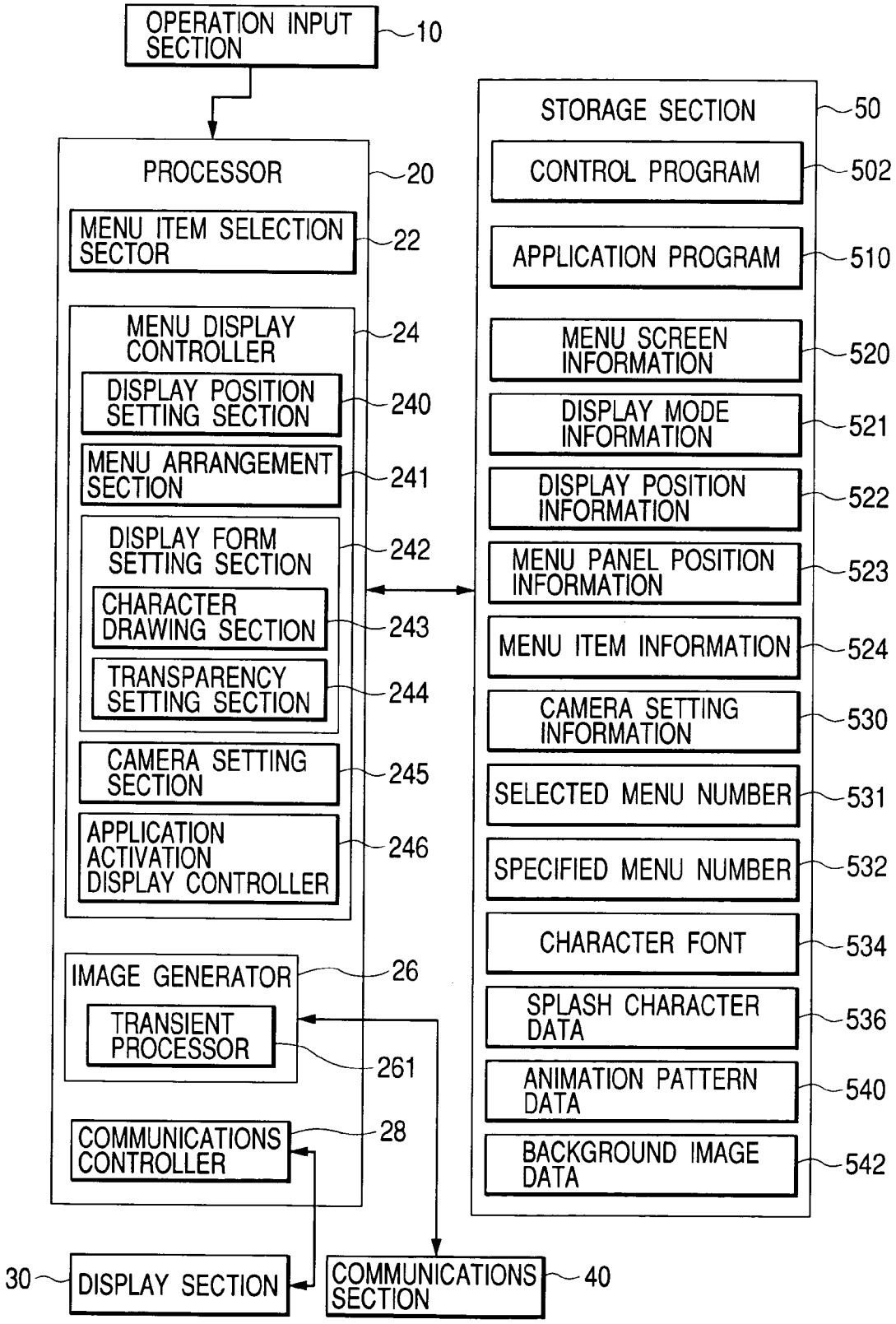
OPERATION INPUT SECTION
10
PROCESSOR
20
MENU ITEM SELECTION SECTOR
22
MENU DISPLAY CONTROLLER
24
DISPLAY POSITION SETTING SECTION
240
MENU ARRANGEMENT SECTION
241
DISPLAY FORM SETTING SECTION
242
CHARACTER DRAWING SECTION
243
TRANSPARENCY SETTING SECTION
244
CAMERA SETTING SECTION
245
APPLICATION ACTIVATION DISPLAY CONTROLLER
246
IMAGE GENERATOR
26
TRANSIENT PROCESSOR
261
COMMUNICATIONS CONTROLLER
28
30
DISPLAY SECTION
COMMUNICATIONS SECTION
40
STORAGE SECTION
50
CONTROL PROGRAM
502
APPLICATION PROGRAM
510
MENU SCREEN INFORMATION
520
DISPLAY MODE INFORMATION
521
DISPLAY POSITION INFORMATION
522
MENU PANEL POSITION INFORMATION
523
MENU ITEM INFORMATION
524
CAMERA SETTING INFORMATION
530
SELECTED MENU NUMBER
531
SPECIFIED MENU NUMBER
532
CHARACTER FONT
534
SPLASH CHARACTER DATA
536
ANIMATION PATTERN DATA
540
BACKGROUND IMAGE DATA
542

FIG. 6

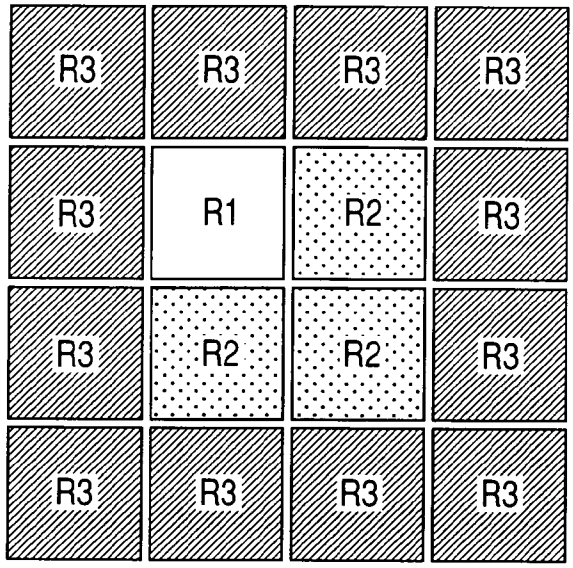
R3
R3
R3
R3
R3
R1
R2
R3
R3
R2
R2
R3
R3
R3
R3
R3

FIG. 7

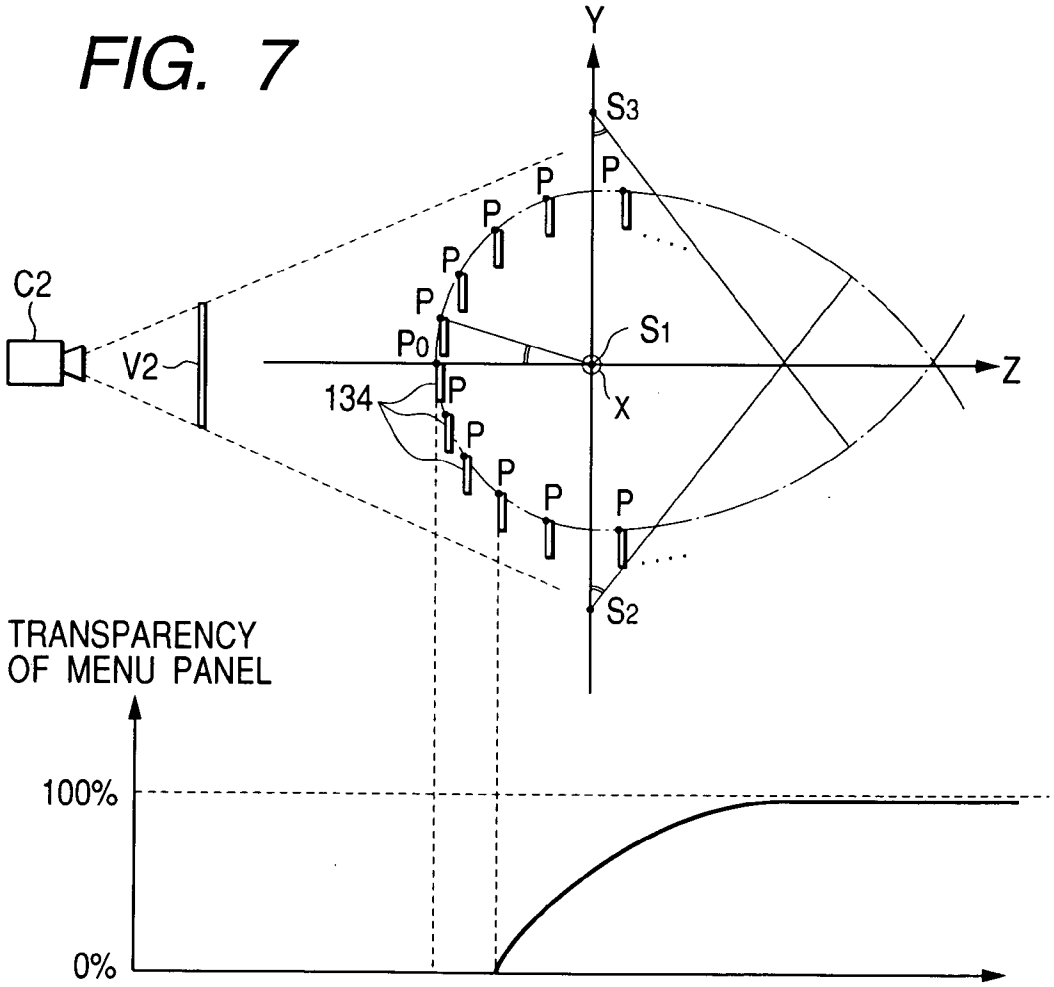
Y
S3
P
P
P
P
P
C2
V2
P0
S1
Z
134
P
X
P
P
P
P
P
S2
TRANSPARENCY
OF MENU PANEL
100%
0%

FIG. 8A

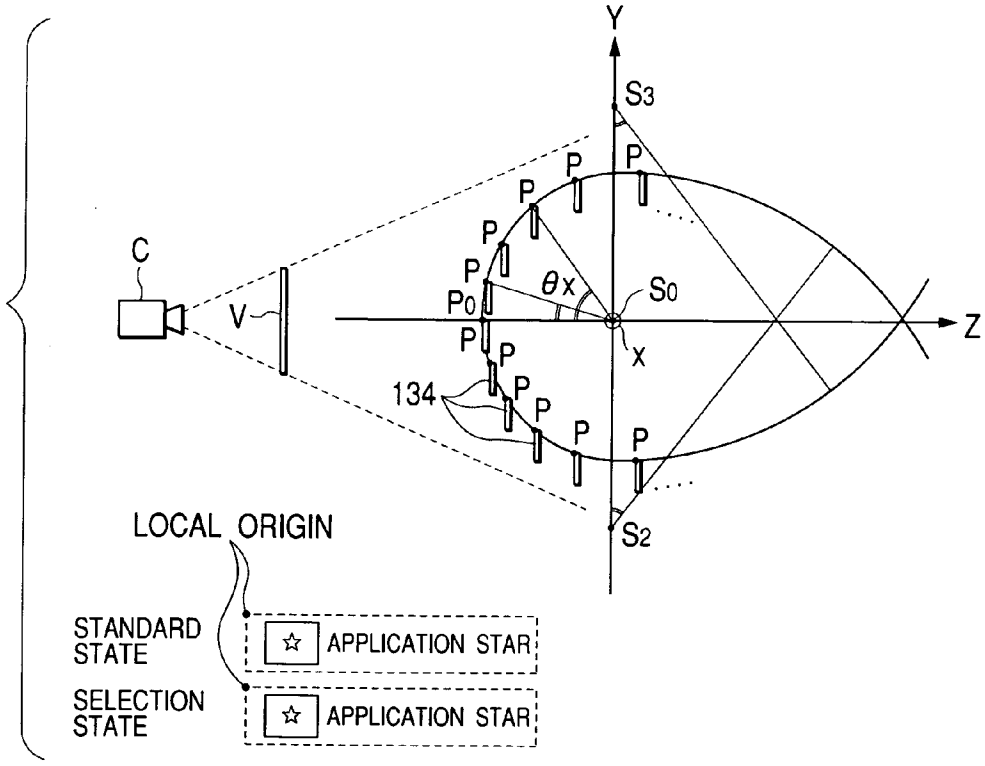

FIG. 8B

DISPLAY POSITION INFORMATION

522-1

522a DISPLAY MODE	① ROUND TYPE	
522b TRAVEL PATH FUNCTION	f1, f2, f3	
DISPLAY POSITION	UPWARD/DOWNWARD DIRECTION ANGLE	TRAVEL PATH FUNCTION APPLIED
P0	θ0	f1
P1	θ1	f1
P2	θ2	f1
:	:	:

522-2

522-3

522c

522d

FIG. 9A

523a 523b 523c 523

MENU ITEM NUMBER	COORDINATES OF LOCAL ORIGIN POSITION	COORDINATE VALUES OFF TO THE UPPER LEFT	COORDINATE VALUES OFF TO THE LOWER RIGHT
1	P4	(X_{11}, Y_{11}, Z_{11})	(X_{21}, Y_{21}, Z_{21})
2	P3	(X_{12}, Y_{12}, Z_{12})	(X_{22}, Y_{22}, Z_{22})
3	P2	(X_{13}, Y_{13}, Z_{13})	(X_{23}, Y_{23}, Z_{23})
:	:	:	:

FIG. 9B

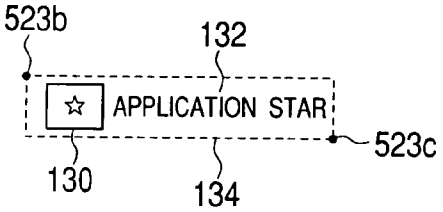

FIG. 10

524a 524b 524c 524d 524

MENU ITEM NUMBER	ICON	MENU NAME	ATTRIBUTE
1	☐	.....	.....
2	☐	.....	.....
3	☐	.....	.....
:	☐	.....	.....

FIG. 11A

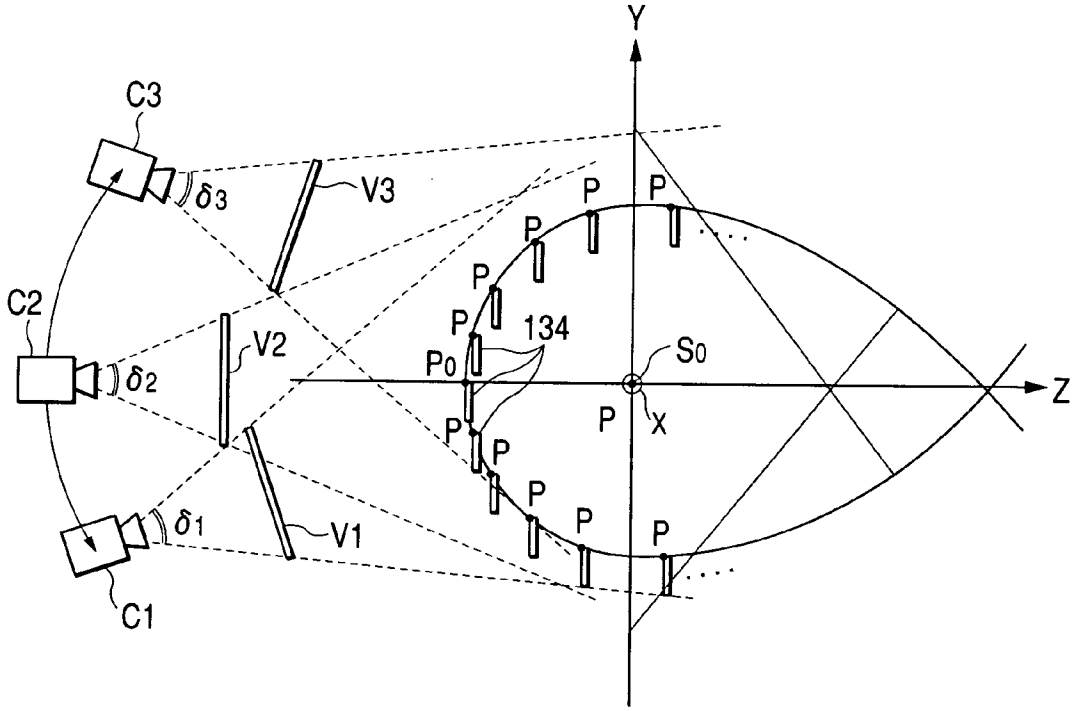

FIG. 11B

530a 530b 530c 530d 530 530e

CAMERA PATH FUNCTION	fc			
INITIAL SETTING	MENU ITEM NUMBER	POSITION COORDINATES	ROTATION	VIEWING ANGLE
	1	Xc1, Yc1	θx1, θy1	δc1
	max	Xc3, Yc3	θx3, θy3	δc3

FIG. 12A

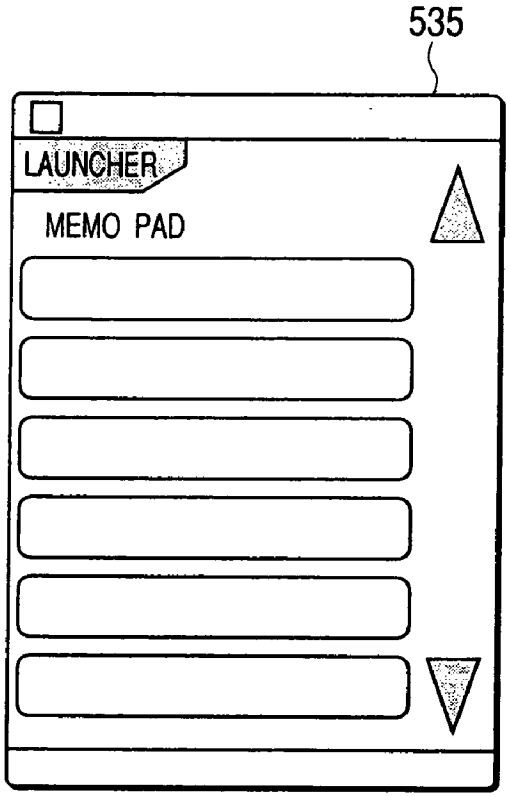

FIG. 12B

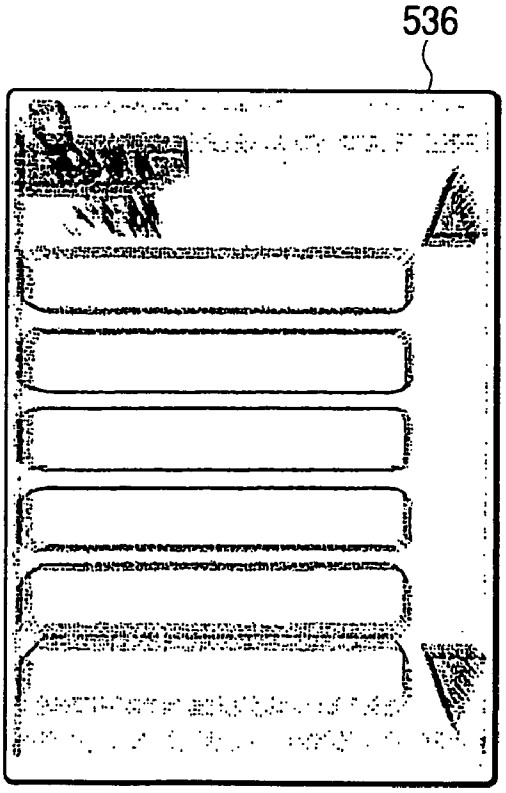

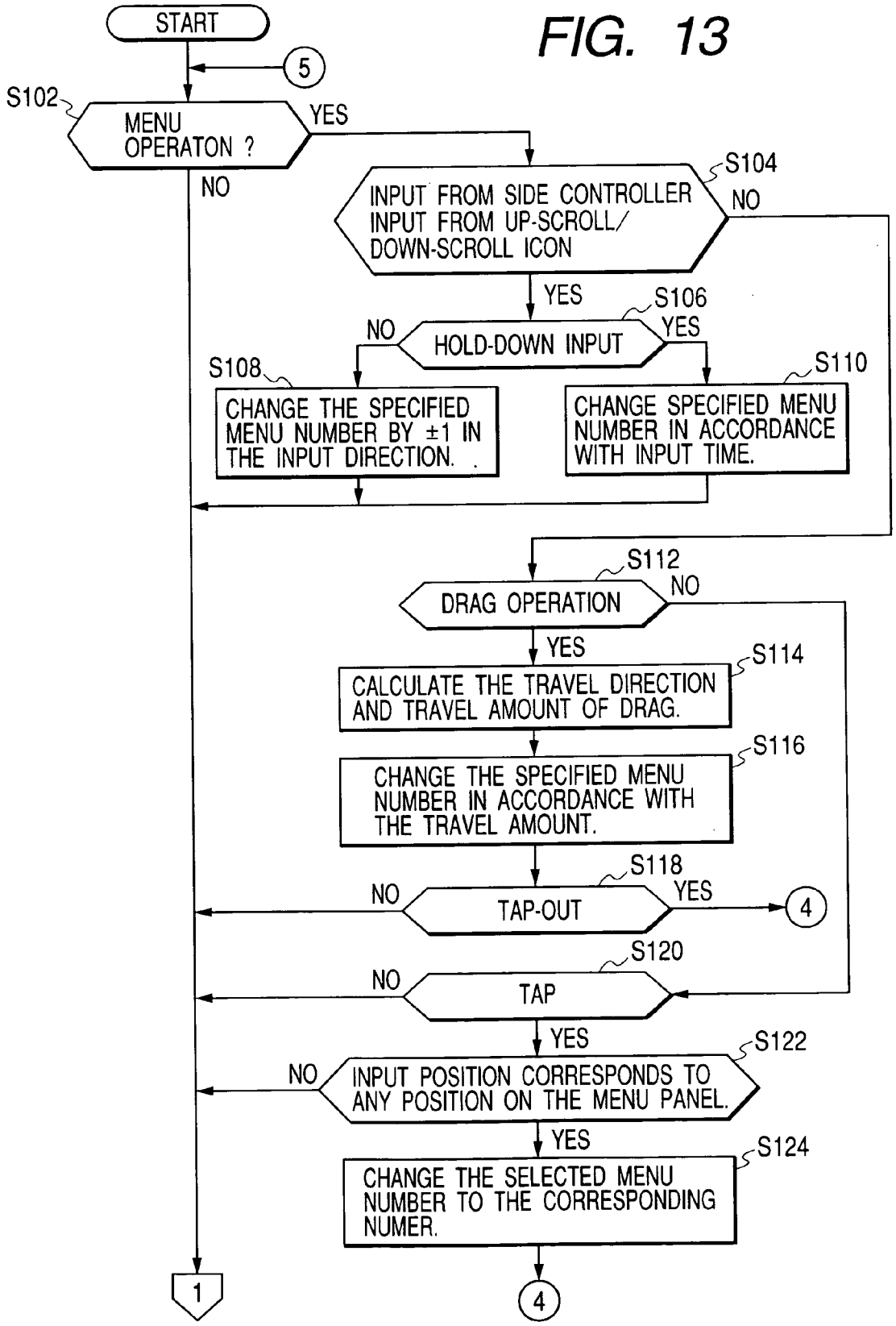
FIG. 13
START
5
S102
MENU OPERATON ?
YES
NO
S104
INPUT FROM SIDE CONTROLLER INPUT FROM UP-SCROLL/ DOWN-SCROLL ICON
NO
YES
S106
HOLD-DOWN INPUT
NO
YES
S108
CHANGE THE SPECIFIED MENU NUMBER BY ±1 IN THE INPUT DIRECTION.
S110
CHANGE SPECIFIED MENU NUMBER IN ACCORDANCE WITH INPUT TIME.
S112
DRAG OPERATION
NO
YES
S114
CALCULATE THE TRAVEL DIRECTION AND TRAVEL AMOUNT OF DRAG.
S116
CHANGE THE SPECIFIED MENU NUMBER IN ACCORDANCE WITH THE TRAVEL AMOUNT.
S118
TAP-OUT
NO
YES
4
S120
TAP
NO
YES
S122
INPUT POSITION CORRESPONDS TO ANY POSITION ON THE MENU PANEL.
NO
YES
S124
CHANGE THE SELECTED MENU NUMBER TO THE CORRESPONDING NUMER.
1
4

FIG. 14

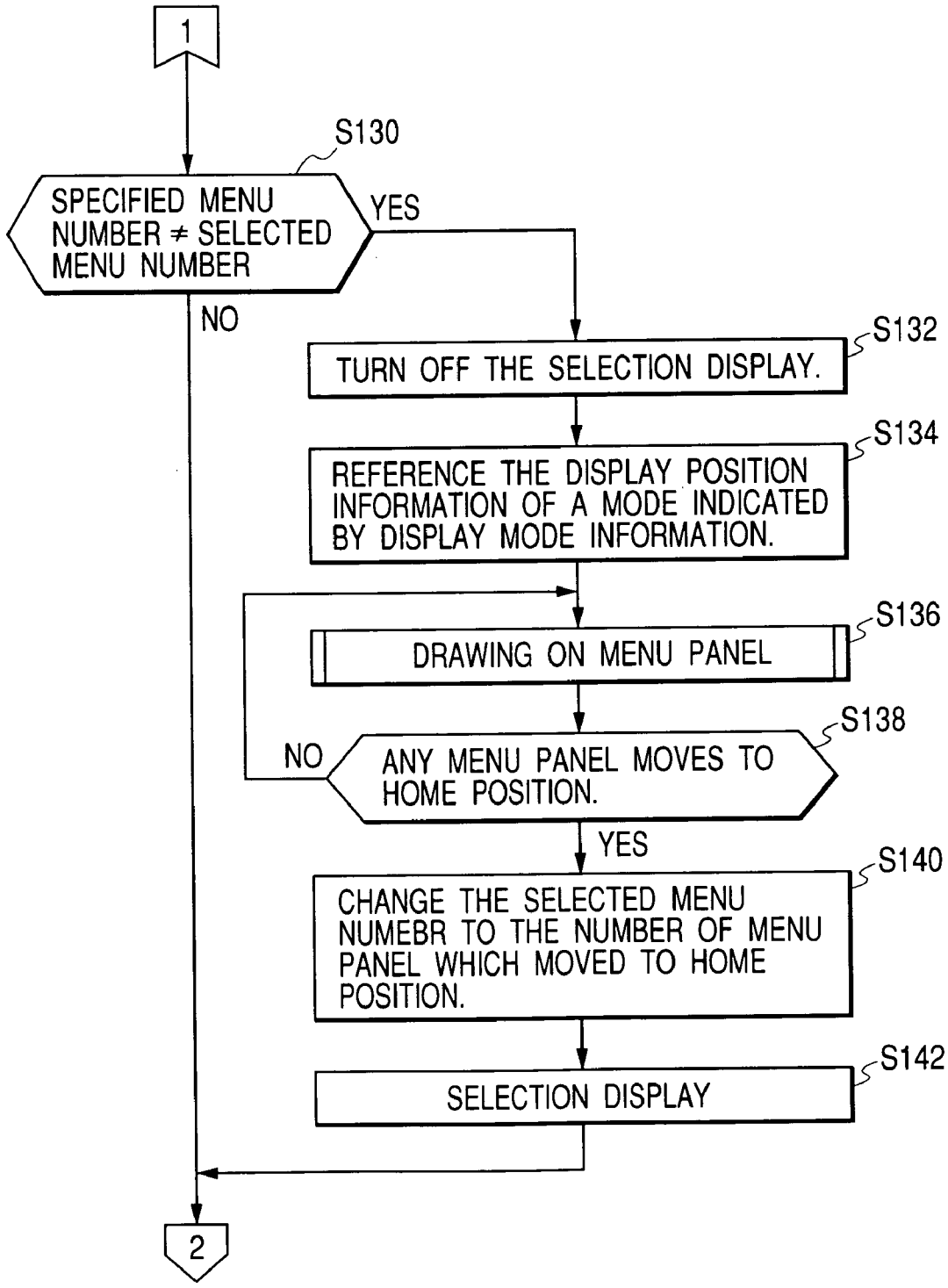
1
S130
SPECIFIED MENU NUMBER ≠ SELECTED MENU NUMBER
YES
NO
S132
TURN OFF THE SELECTION DISPLAY.
S134
REFERENCE THE DISPLAY POSITION INFORMATION OF A MODE INDICATED BY DISPLAY MODE INFORMATION.
S136
DRAWING ON MENU PANEL
S138
NO
ANY MENU PANEL MOVES TO HOME POSITION.
YES
S140
CHANGE THE SELECTED MENU NUMEBR TO THE NUMBER OF MENU PANEL WHICH MOVED TO HOME POSITION.
S142
SELECTION DISPLAY
2

FIG. 15

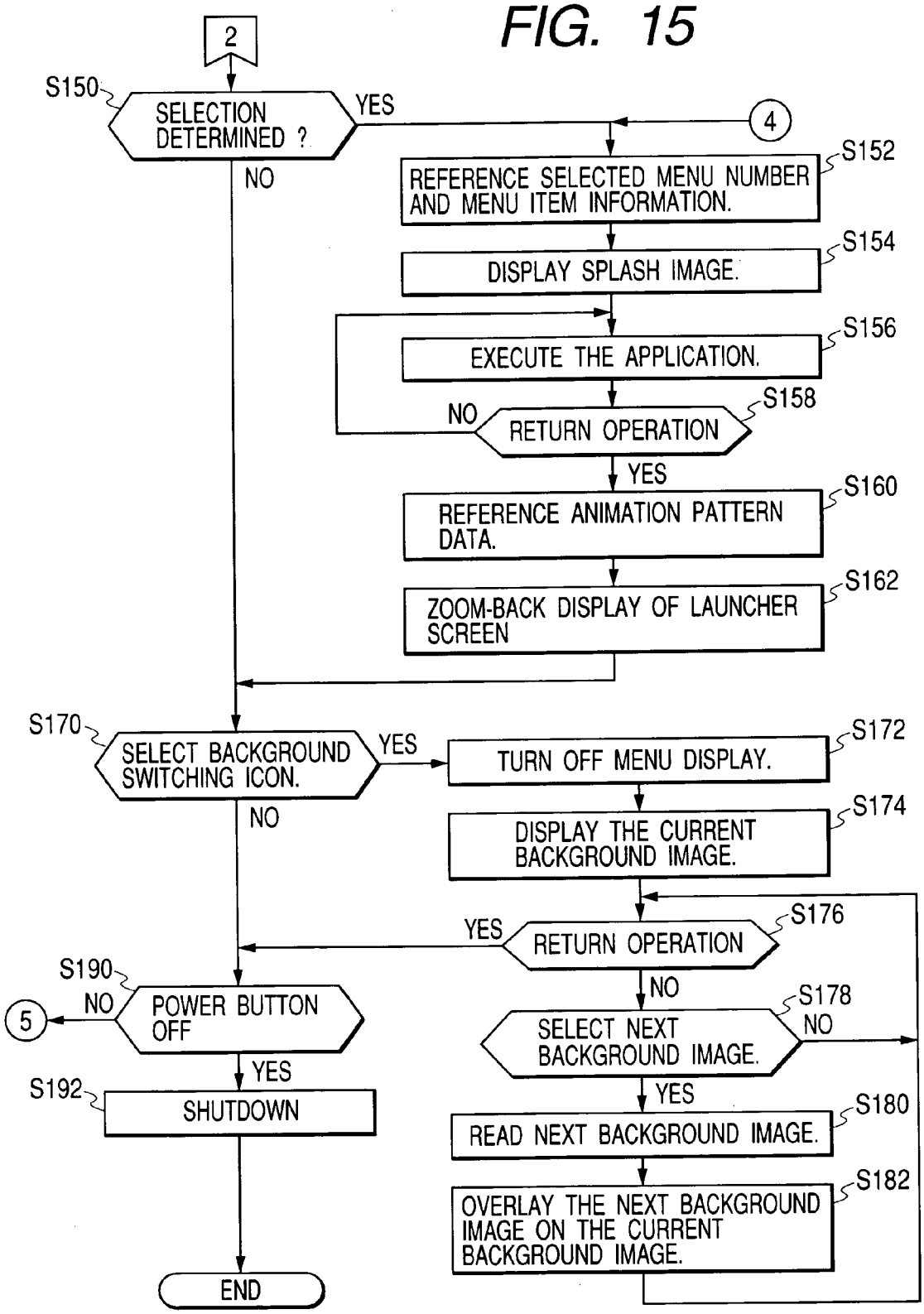
2
S150
SELECTION DETERMINED ?
YES
NO
4
S152
REFERENCE SELECTED MENU NUMBER AND MENU ITEM INFORMATION.
S154
DISPLAY SPLASH IMAGE.
S156
EXECUTE THE APPLICATION.
S158
NO
RETURN OPERATION
YES
S160
REFERENCE ANIMATION PATTERN DATA.
S162
ZOOM-BACK DISPLAY OF LAUNCHER SCREEN
S170
SELECT BACKGROUND SWITCHING ICON.
YES
NO
S172
TURN OFF MENU DISPLAY.
S174
DISPLAY THE CURRENT BACKGROUND IMAGE.
S176
YES
RETURN OPERATION
NO
S178
NO
SELECT NEXT BACKGROUND IMAGE.
YES
S180
READ NEXT BACKGROUND IMAGE.
S182
OVERLAY THE NEXT BACKGROUND IMAGE ON THE CURRENT BACKGROUND IMAGE.
S190
NO
5
POWER BUTTON OFF
YES
S192
SHUTDOWN
END

FIG. 16

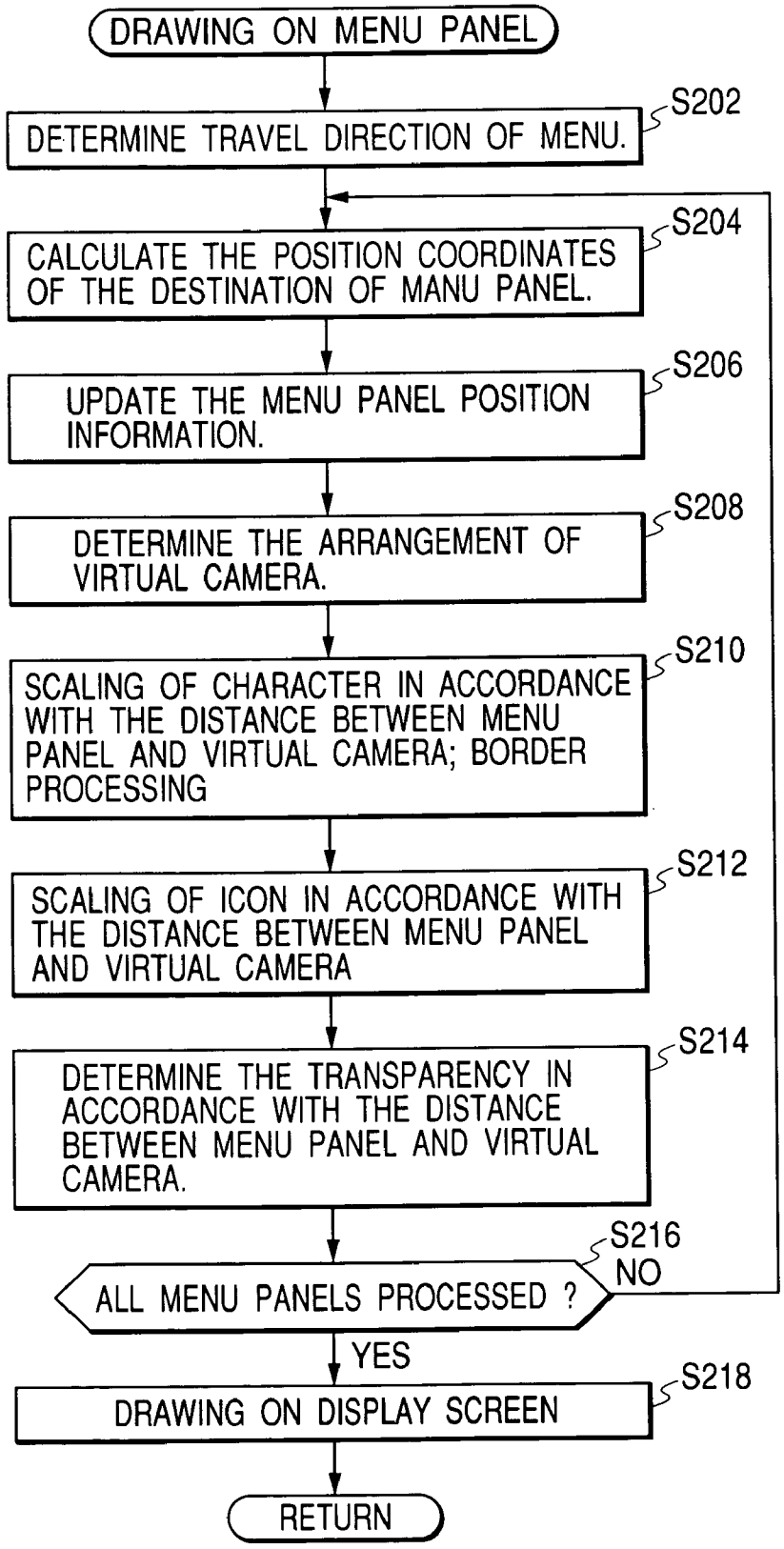
DRAWING ON MENU PANEL
DETERMINE TRAVEL DIRECTION OF MENU.
S202
CALCULATE THE POSITION COORDINATES OF THE DESTINATION OF MANU PANEL.
S204
UPDATE THE MENU PANEL POSITION INFORMATION.
S206
DETERMINE THE ARRANGEMENT OF VIRTUAL CAMERA.
S208
SCALING OF CHARACTER IN ACCORDANCE WITH THE DISTANCE BETWEEN MENU PANEL AND VIRTUAL CAMERA; BORDER PROCESSING
S210
SCALING OF ICON IN ACCORDANCE WITH THE DISTANCE BETWEEN MENU PANEL AND VIRTUAL CAMERA
S212
DETERMINE THE TRANSPARENCY IN ACCORDANCE WITH THE DISTANCE BETWEEN MENU PANEL AND VIRTUAL CAMERA.
S214
ALL MENU PANELS PROCESSED ?
S216
NO
YES
DRAWING ON DISPLAY SCREEN
S218
RETURN

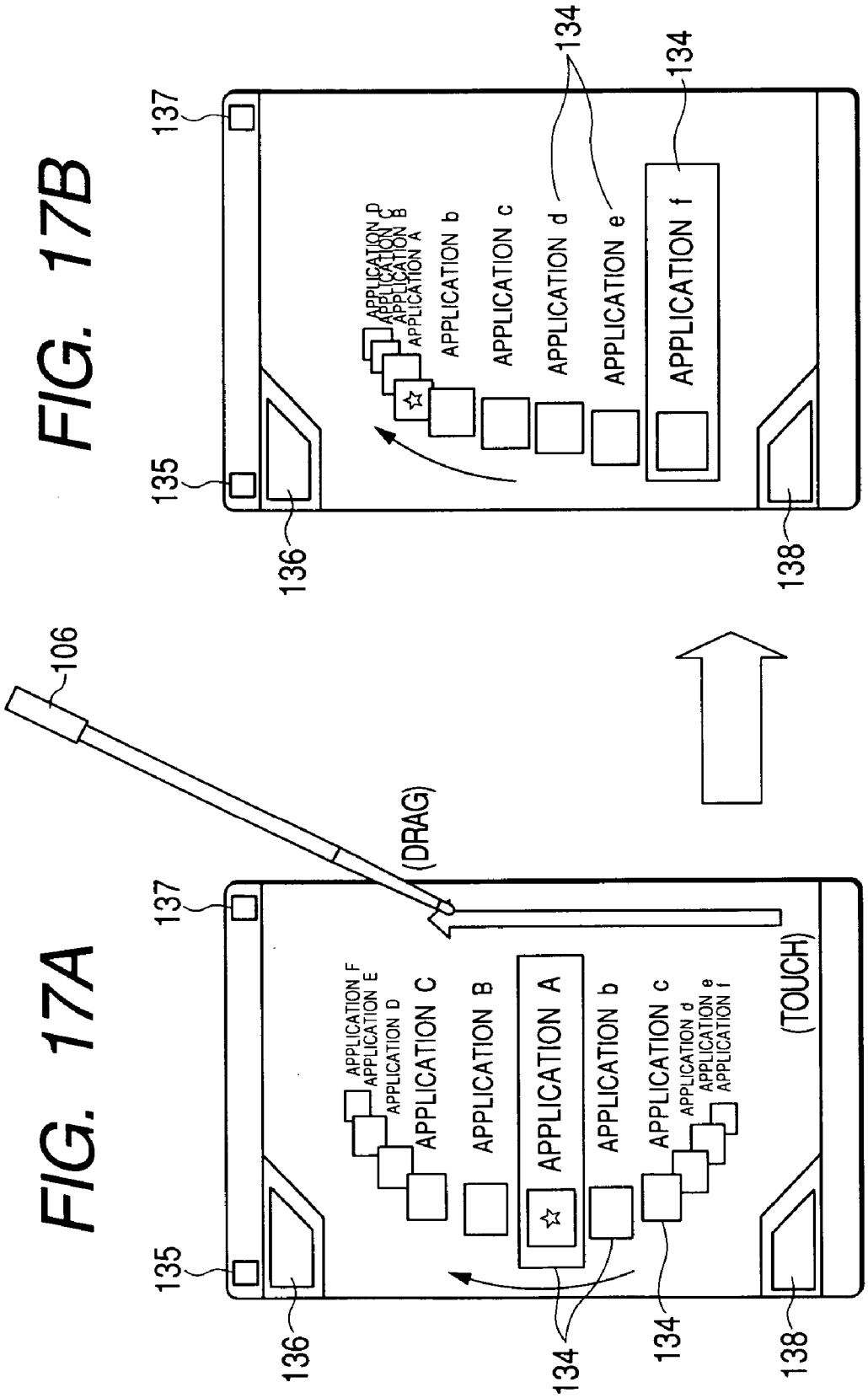
FIG. 17A
FIG. 17B
106
(DRAG)
(TOUCH)
APPLICATION F
APPLICATION E
APPLICATION D
APPLICATION C
APPLICATION B
APPLICATION A
APPLICATION b
APPLICATION c
APPLICATION d
APPLICATION e
APPLICATION f
APPLICATION D
APPLICATION C
APPLICATION B
APPLICATION A
APPLICATION b
APPLICATION c
APPLICATION d
APPLICATION e
APPLICATION f
134
135
136
137
138

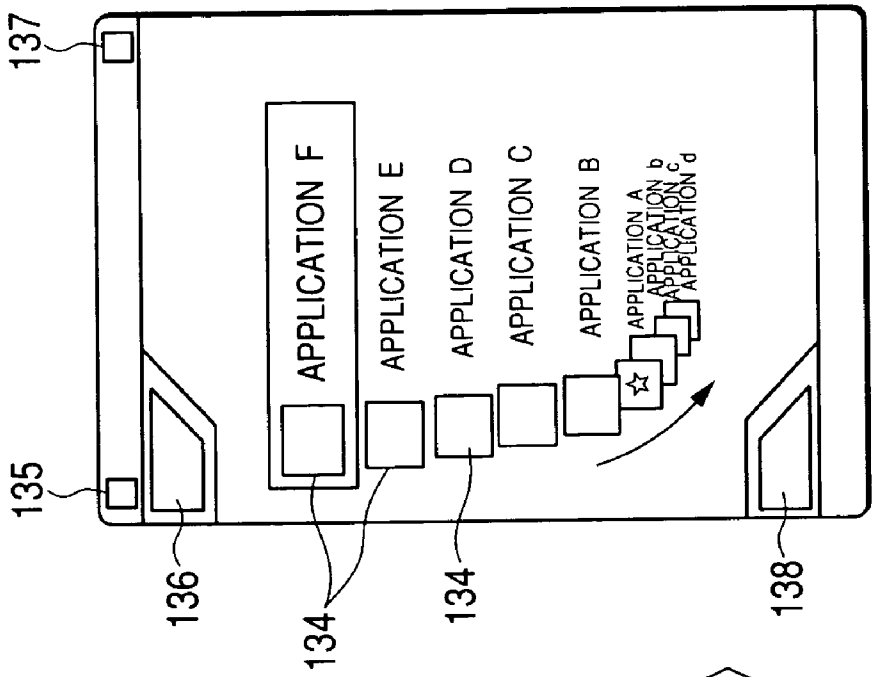
FIG. 18B
137
135
136
134
134
138
APPLICATION F
APPLICATION E
APPLICATION D
APPLICATION C
APPLICATION B
APPLICATION A
APPLICATION b
APPLICATION c
APPLICATION d

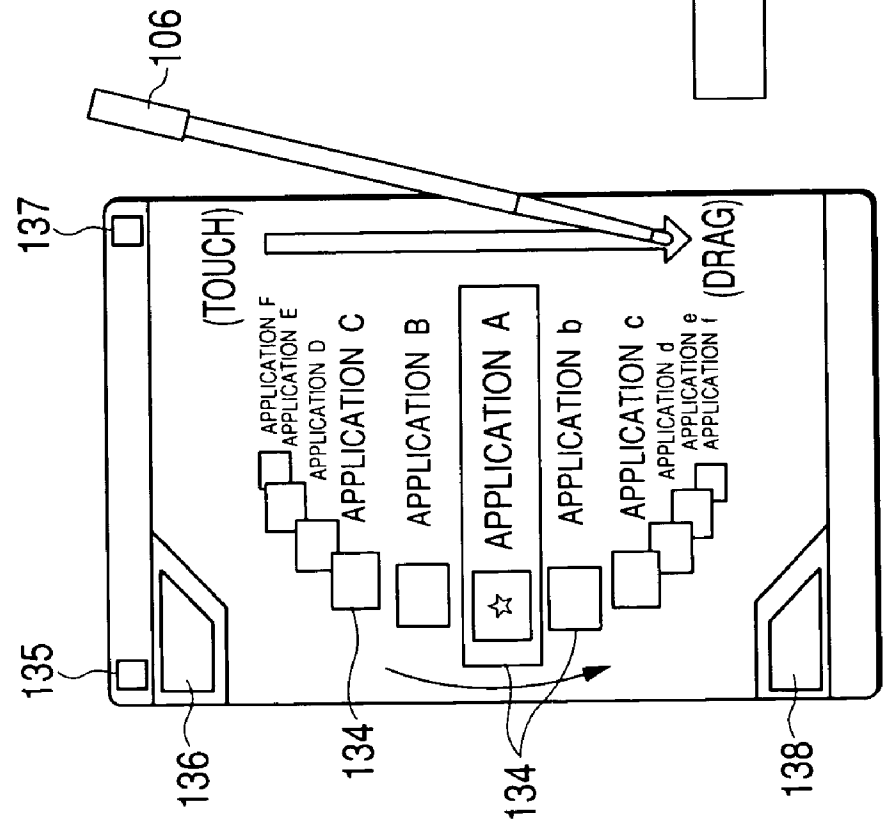
FIG. 18A
106
137
135
136
134
134
138
(TOUCH)
(DRAG)
APPLICATION F
APPLICATION E
APPLICATION D
APPLICATION C
APPLICATION B
APPLICATION A
APPLICATION b
APPLICATION c
APPLICATION d
APPLICATION e
APPLICATION f

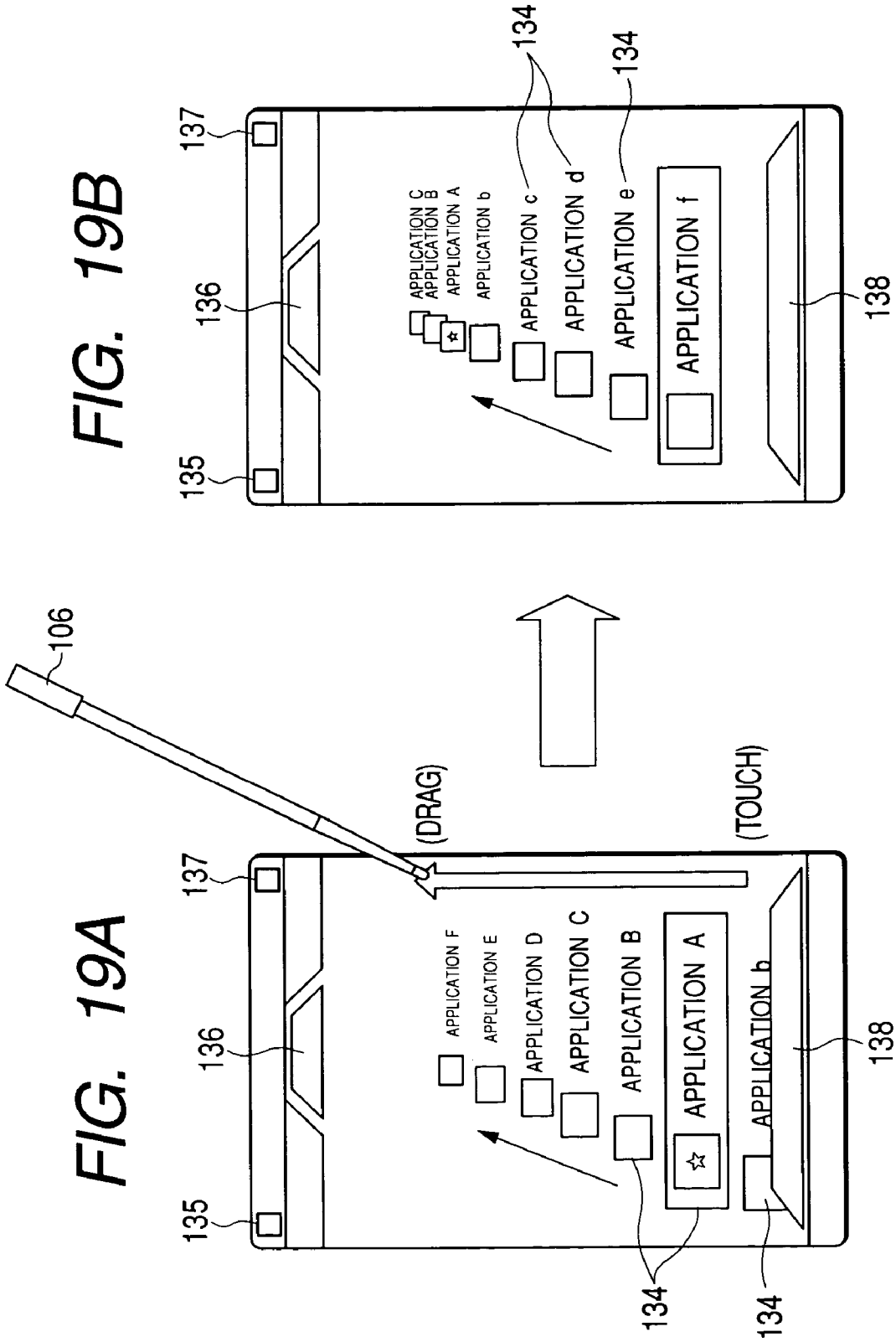
FIG. 19A
106
(DRAG)
(TOUCH)
135
136
137
138
134
134
APPLICATION F
APPLICATION E
APPLICATION D
APPLICATION C
APPLICATION B
APPLICATION A
APPLICATION b
FIG. 19B
135
136
137
138
134
134
APPLICATION C
APPLICATION B
APPLICATION A
APPLICATION b
APPLICATION c
APPLICATION d
APPLICATION e
APPLICATION f

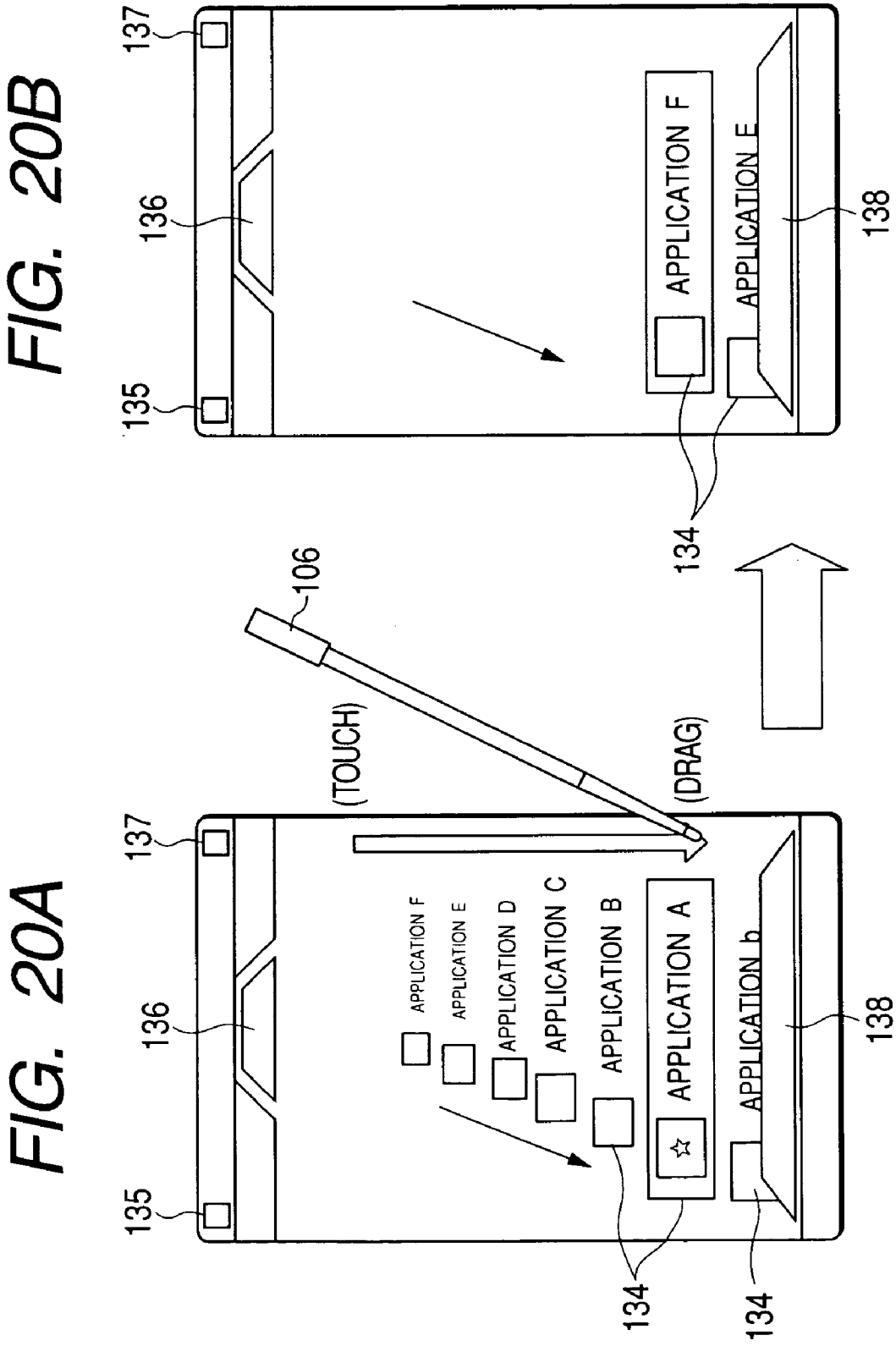
FIG. 20A
FIG. 20B
135
136
137
138
134
106
(TOUCH)
(DRAG)
APPLICATION F
APPLICATION E
APPLICATION D
APPLICATION C
APPLICATION B
APPLICATION A
APPLICATION b

FIG. 21

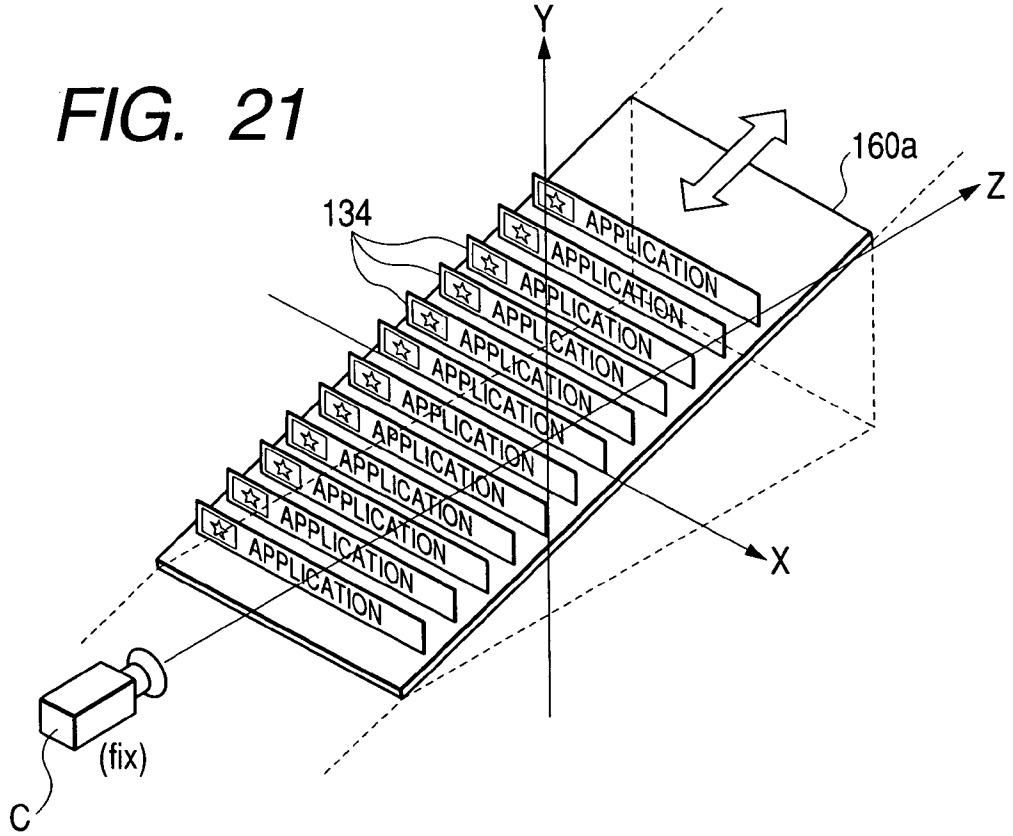
Y
160a
Z
134
APPLICATION
X
(fix)
C

FIG. 22

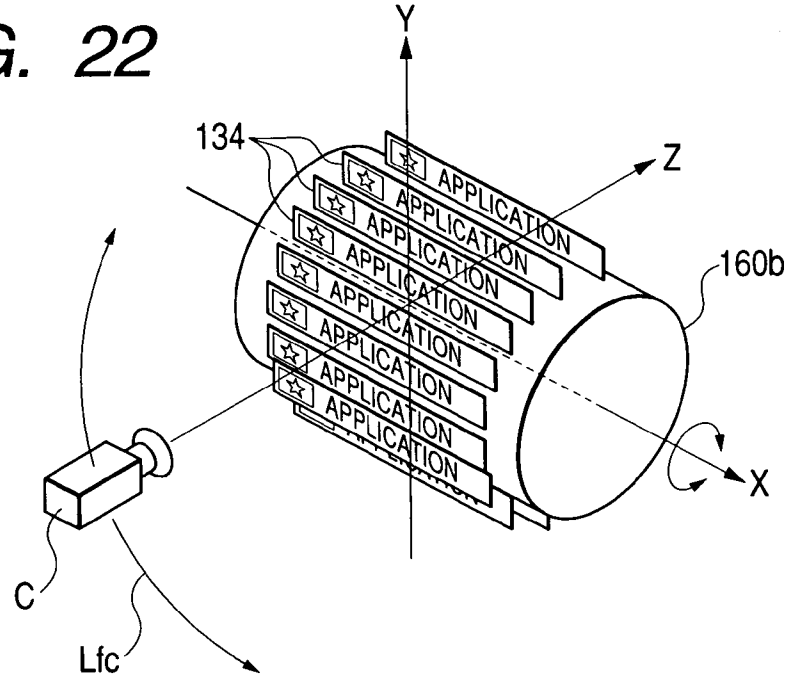
Y
134
Z
APPLICATION
160b
X
C
Lfc

FIG. 23

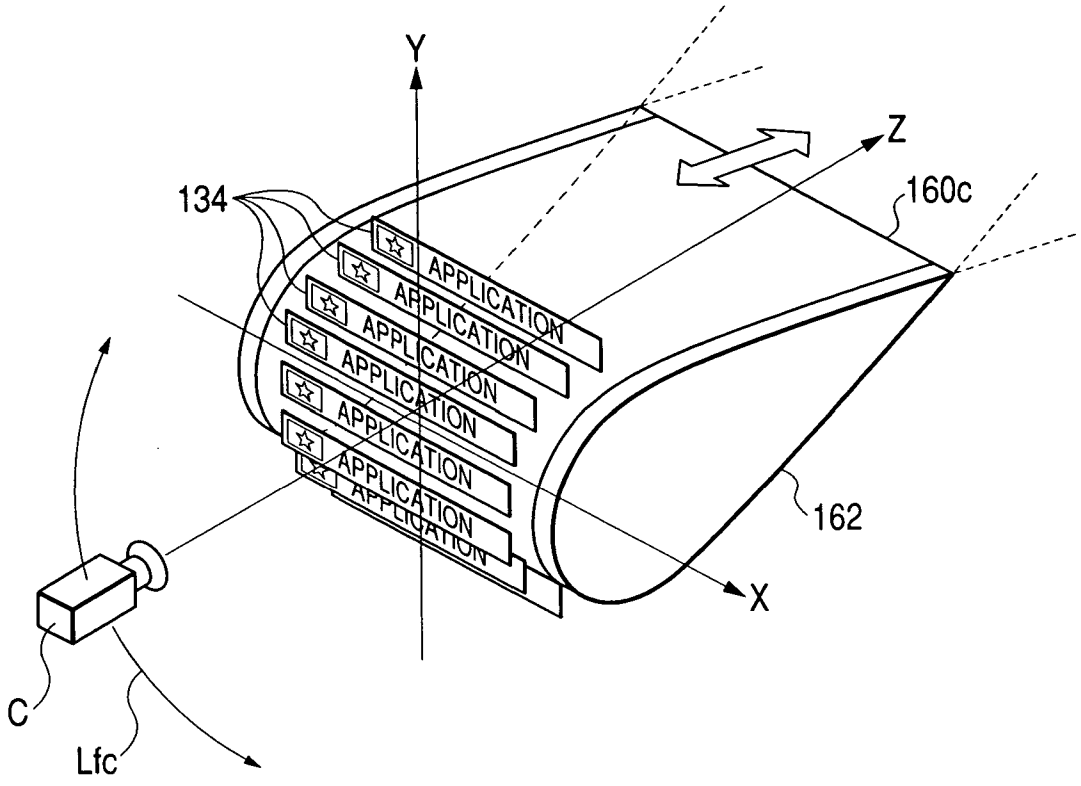
Y
Z
134
160c
APPLICATION
APPLICATION
APPLICATION
APPLICATION
APPLICATION
APPLICATION
APPLICATION
162
X
C
Lfc

FIG. 24A

FIG. 24B

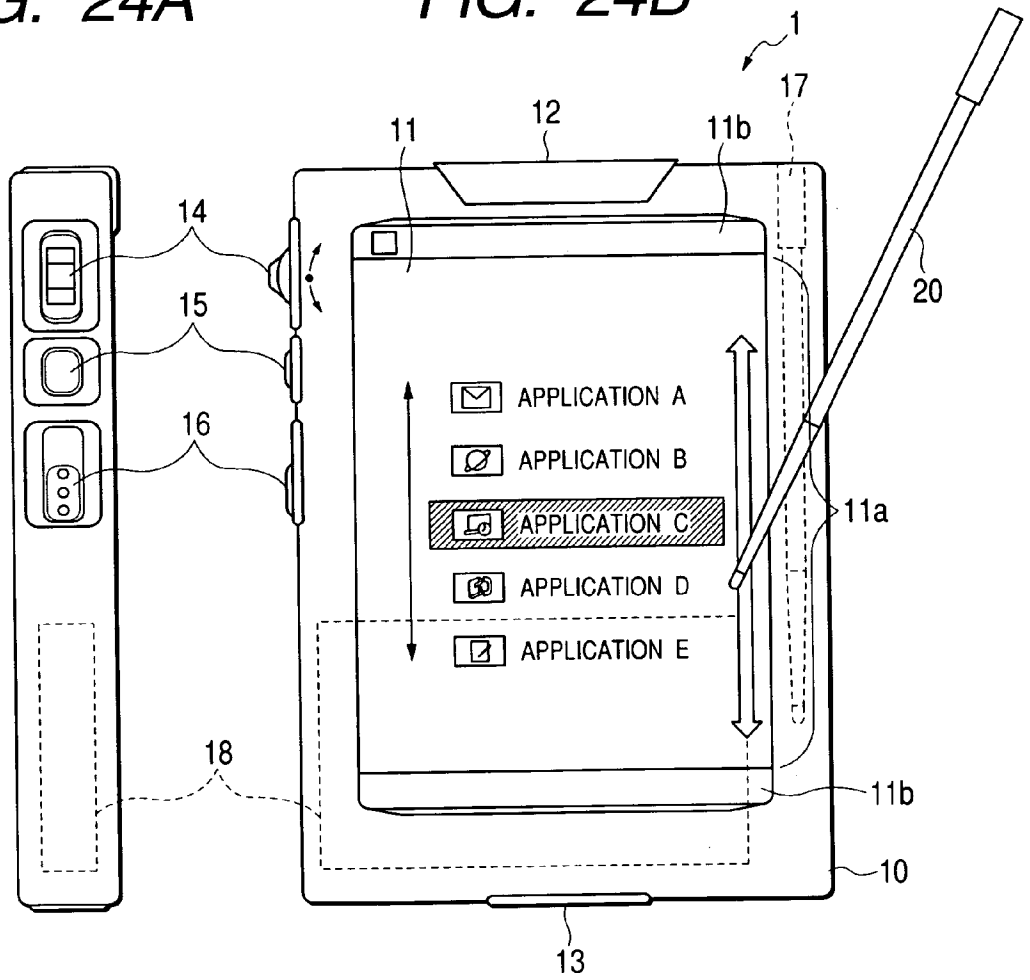

FIG. 25

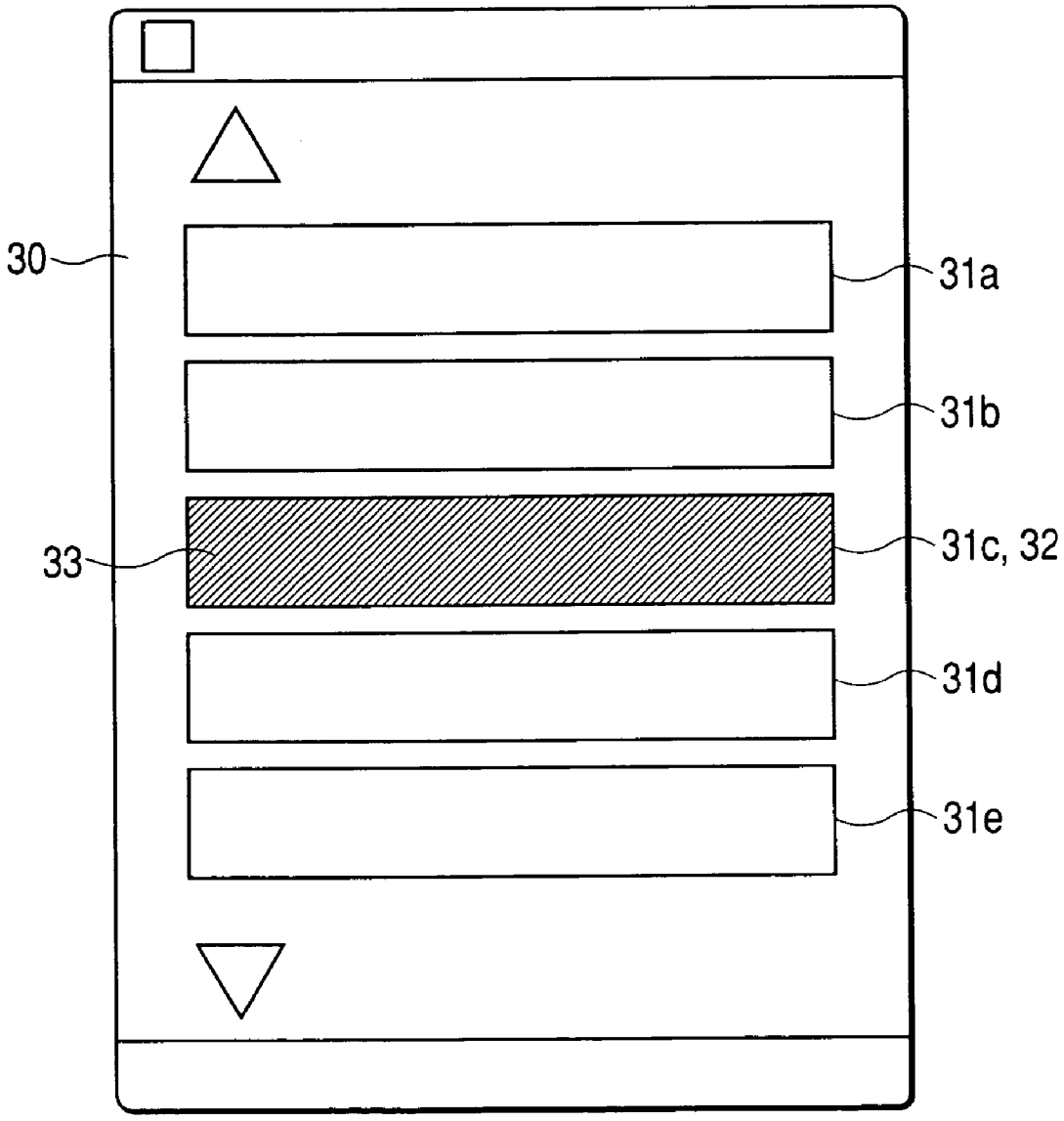

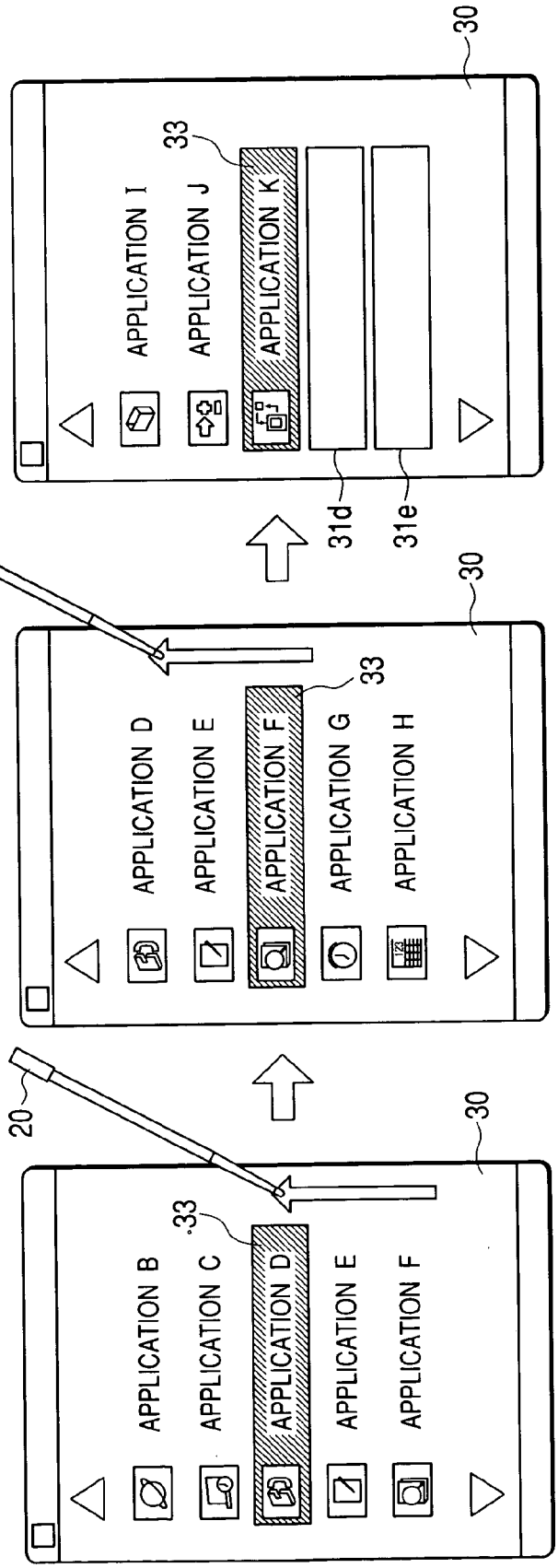
FIG. 26A
APPLICATION B
APPLICATION C
APPLICATION D
APPLICATION E
APPLICATION F
33
20
30
FIG. 26B
APPLICATION D
APPLICATION E
APPLICATION F
APPLICATION G
APPLICATION H
33
20
30
FIG. 26C
APPLICATION I
APPLICATION J
APPLICATION K
33
31d
31e
30

FIG. 27A

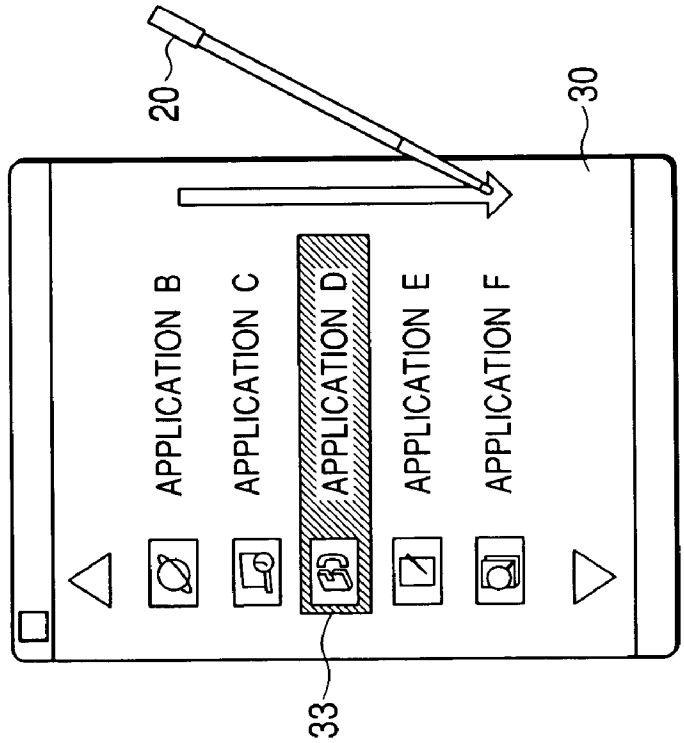

FIG. 27B

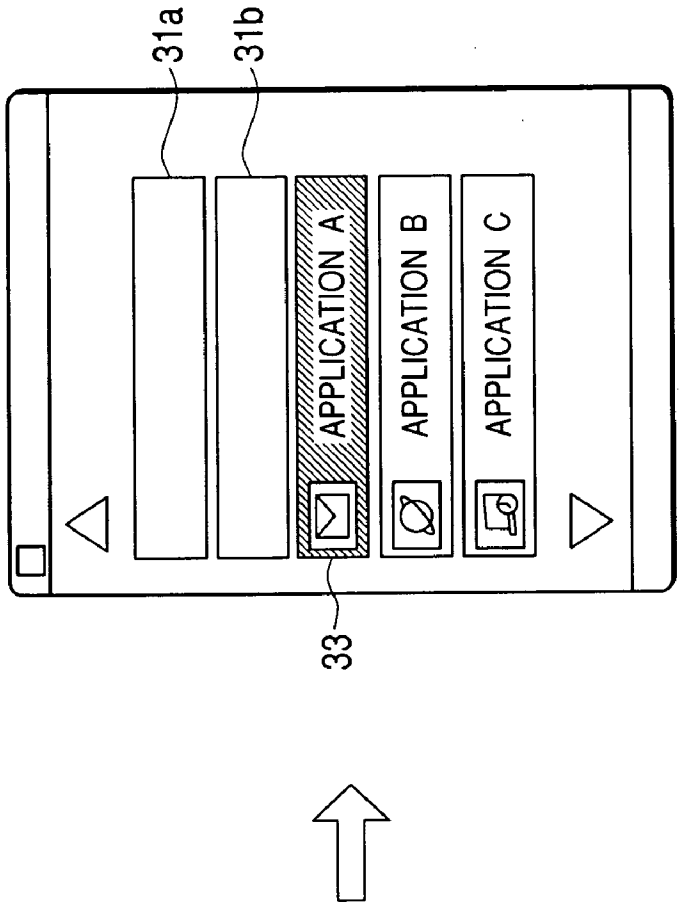

FIG. 28

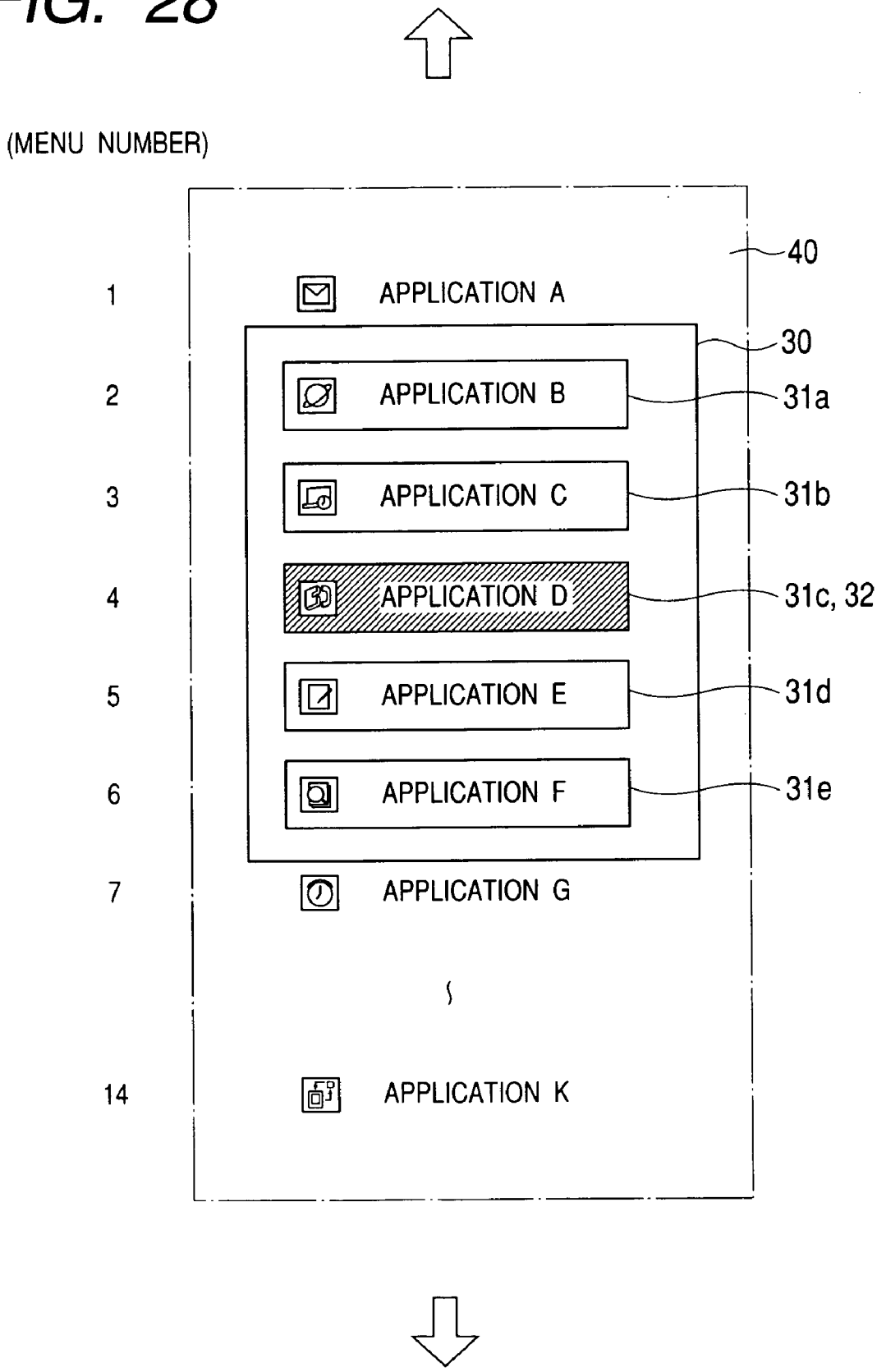
(MENU NUMBER)
40
1
APPLICATION A
30
2
APPLICATION B
31a
3
APPLICATION C
31b
4
APPLICATION D
31c, 32
5
APPLICATION E
31d
6
APPLICATION F
31e
7
APPLICATION G
14
APPLICATION K

FIG. 29

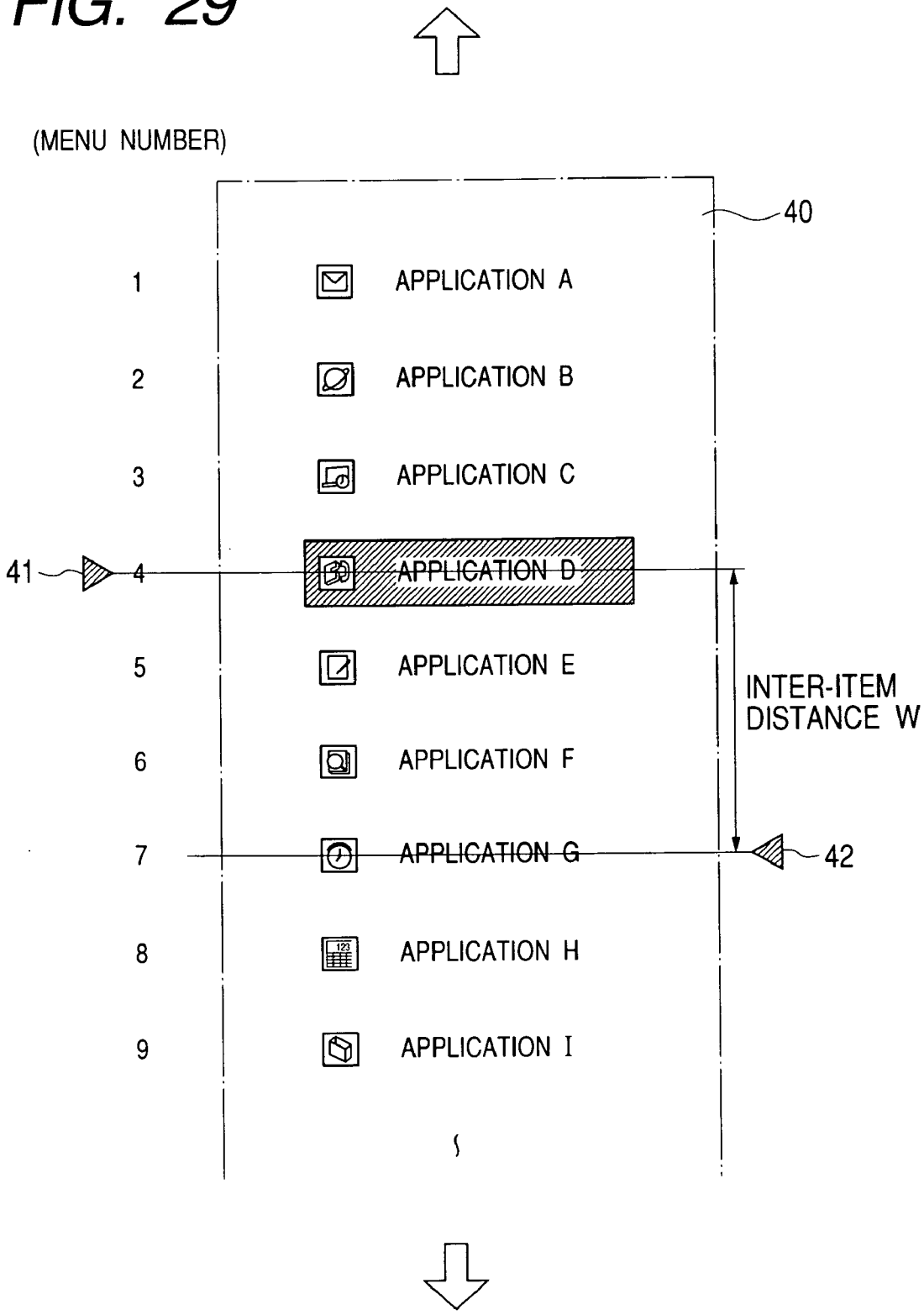
(MENU NUMBER)
40
1
APPLICATION A
2
APPLICATION B
3
APPLICATION C
41
4
APPLICATION D
5
APPLICATION E
INTER-ITEM
DISTANCE W
6
APPLICATION F
7
APPLICATION G
42
8
APPLICATION H
9
APPLICATION I

FIG. 30

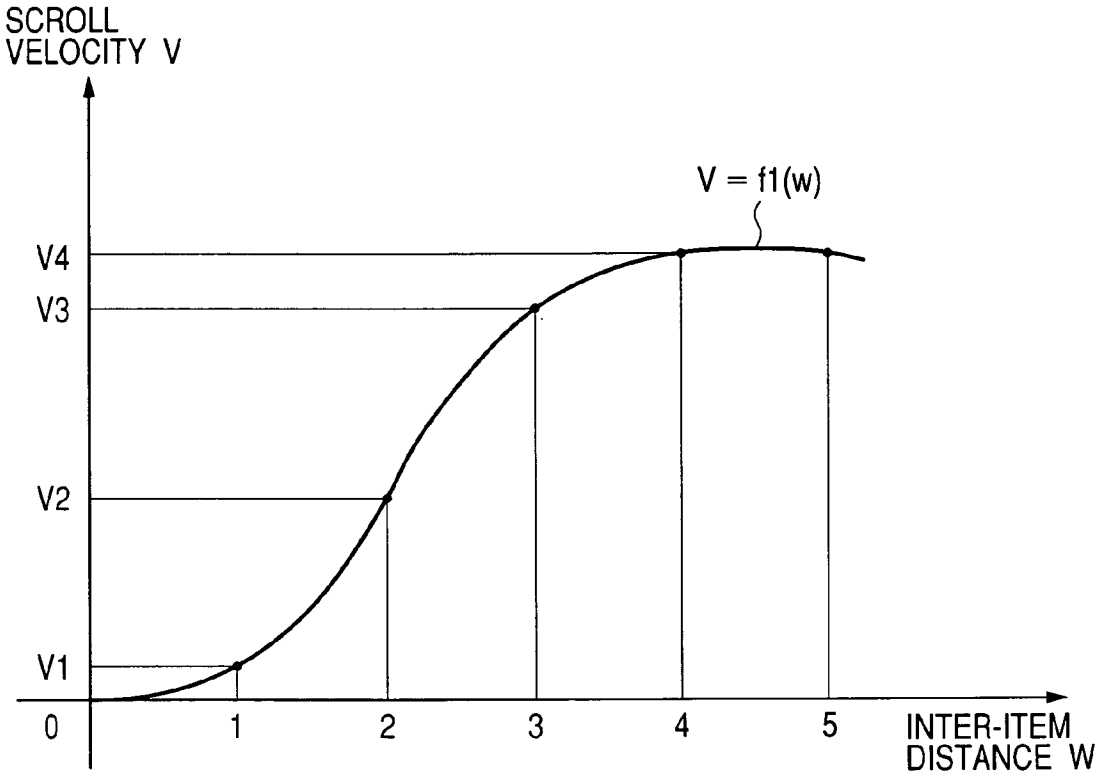
SCROLL
VELOCITY V
V = f1(w)
V4
V3
V2
V1
0
1
2
3
4
5
INTER-ITEM
DISTANCE W

FIG. 31

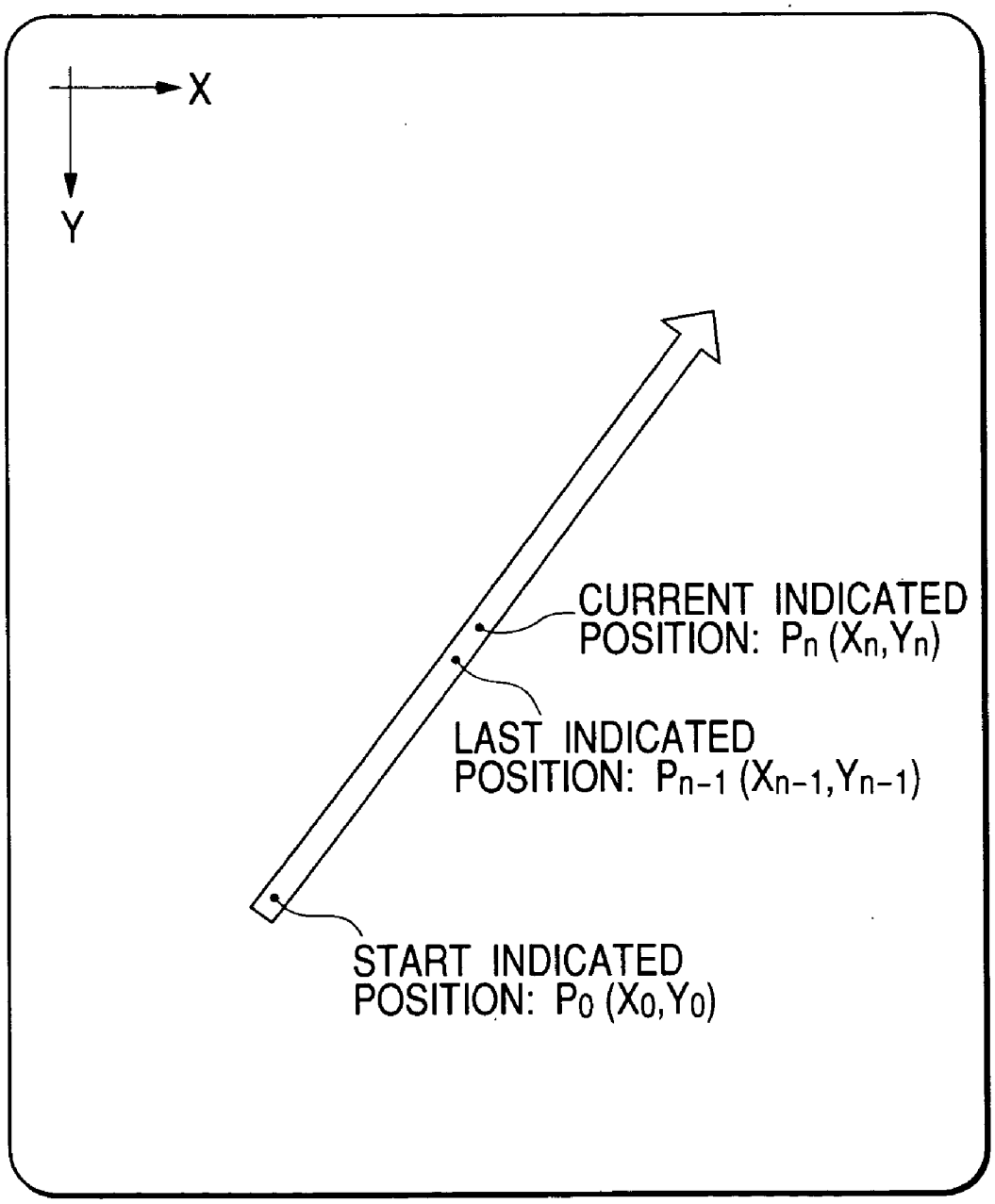
X
Y
CURRENT INDICATED POSITION: Pn (Xn,Yn)
LAST INDICATED POSITION: Pn-1 (Xn-1,Yn-1)
START INDICATED POSITION: P0 (X0,Y0)

FIG. 32

	DRAG DIRECTION	TRAVEL DISTANCE ΔY
$Y_n > Y_{n-1}$	DOWNWARD	$Y_n - Y_{n-1}$
$Y_n = Y_{n-1}$	N/A	0
$Y_n < Y_{n-1}$	UPWARD	$Y_{n-1} - Y_n$

FIG. 33

DRAG DIRECTION	TRAVEL DIRECTION OF DESTINATION POINTER
DOWNWARD	UPWARD
UPWARD	DOWNWARD
N/A	N/A

FIG. 34

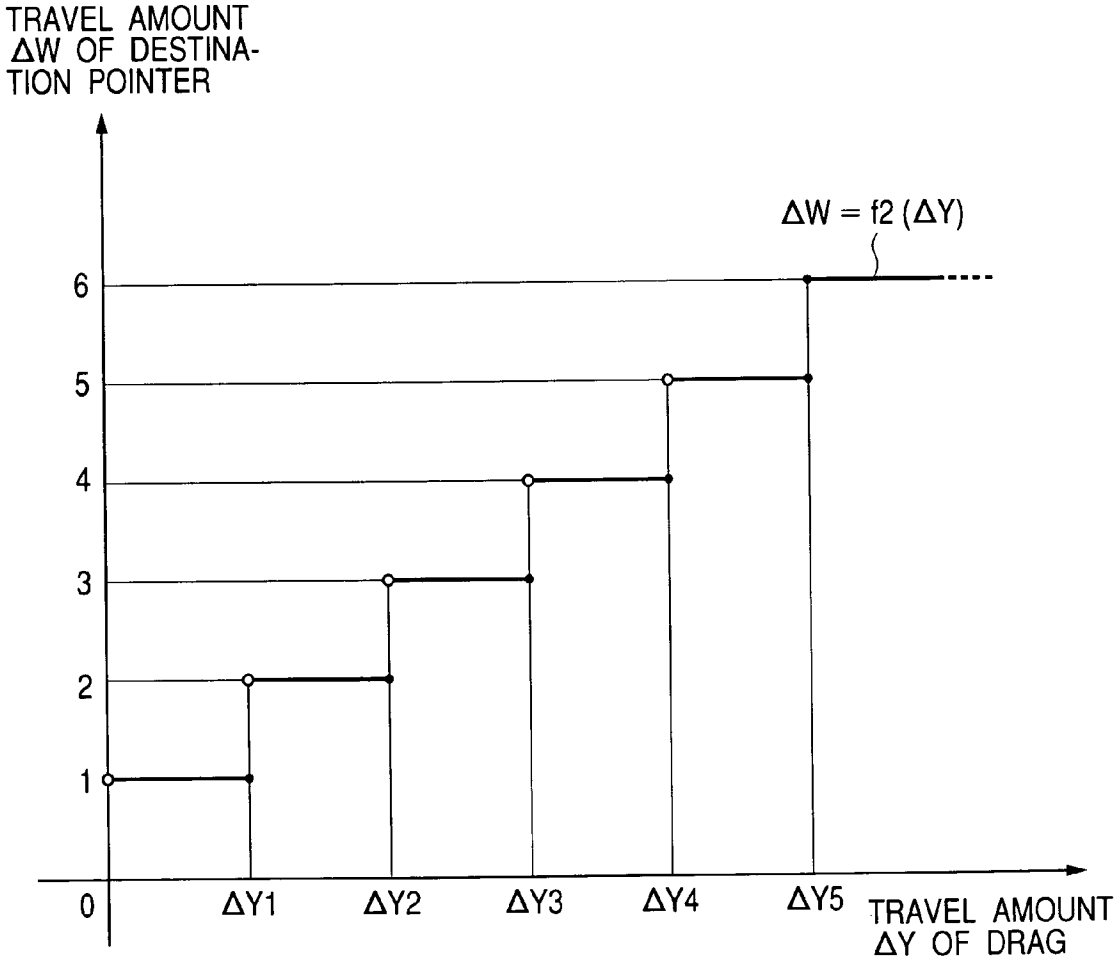
TRAVEL AMOUNT
ΔW OF DESTINA-
TION POINTER
ΔW = f2 (ΔY)
6
5
4
3
2
1
0
ΔY1
ΔY2
ΔY3
ΔY4
ΔY5
TRAVEL AMOUNT
ΔY OF DRAG

FIG. 35

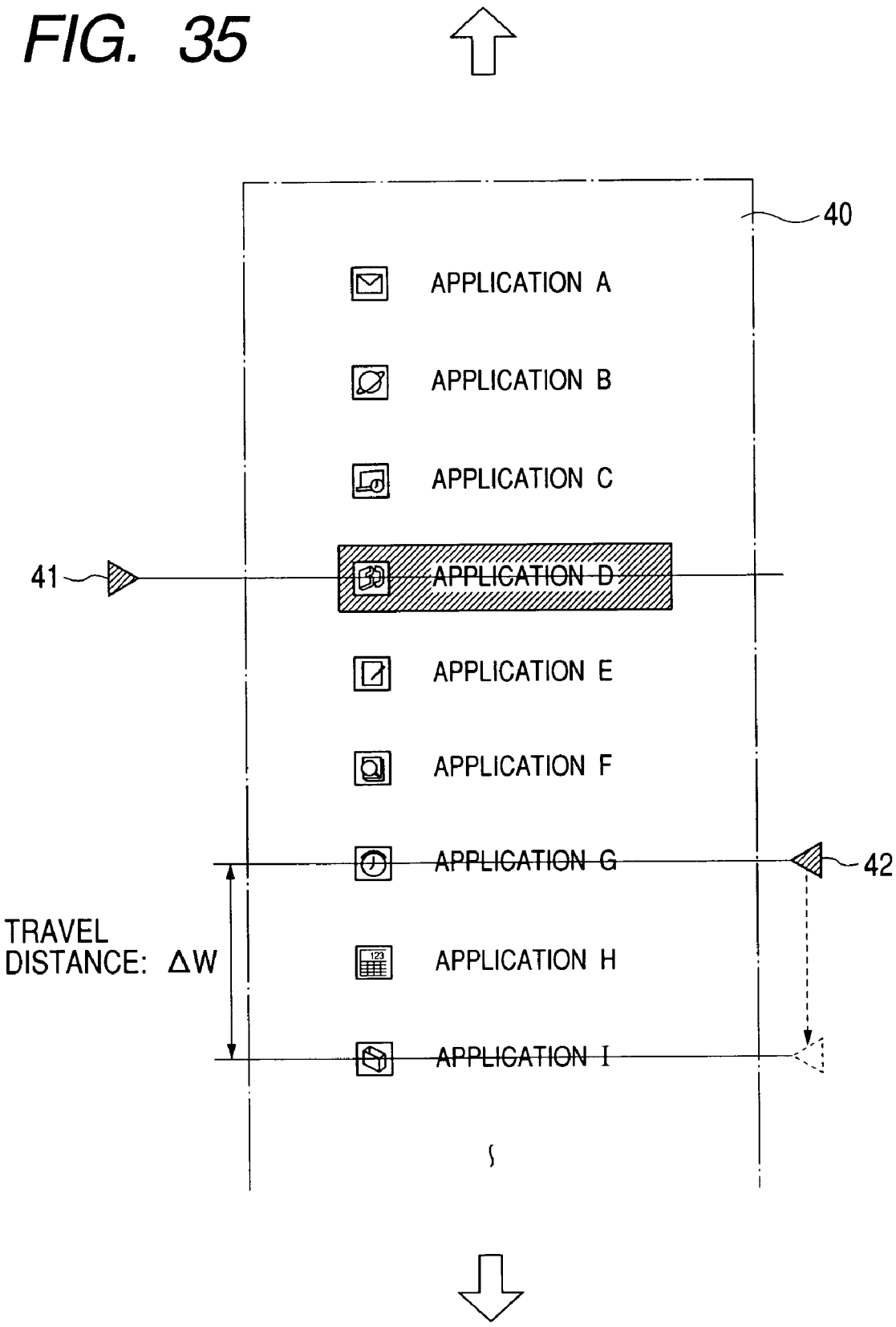
40
APPLICATION A
APPLICATION B
APPLICATION C
41
APPLICATION D
APPLICATION E
APPLICATION F
APPLICATION G
42
TRAVEL
DISTANCE: ΔW
APPLICATION H
APPLICATION I

FIG. 36

SIDE CONTROLLER INPUT DIRECTION	TRAVEL DIRECTION OF DESTINATION POINTER
DOWNWARD	DOWNWARD
UPWARD	UPWARD
N/A	N/A

FIG. 37

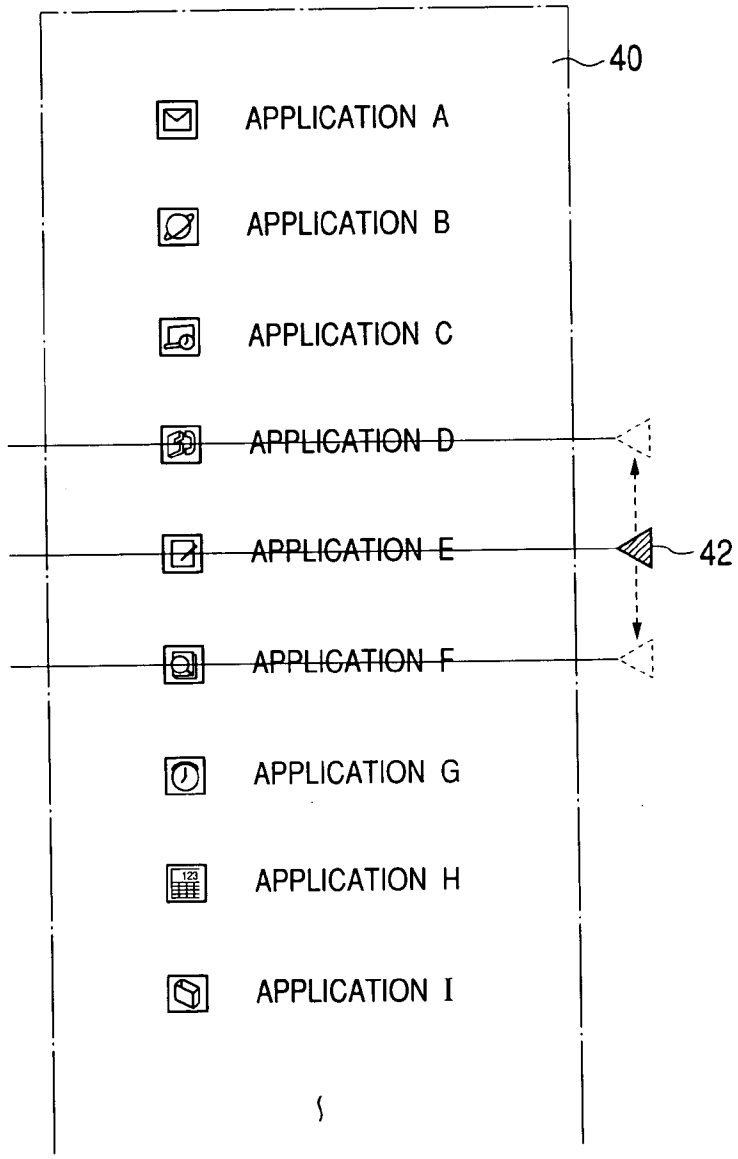

FIG. 38B

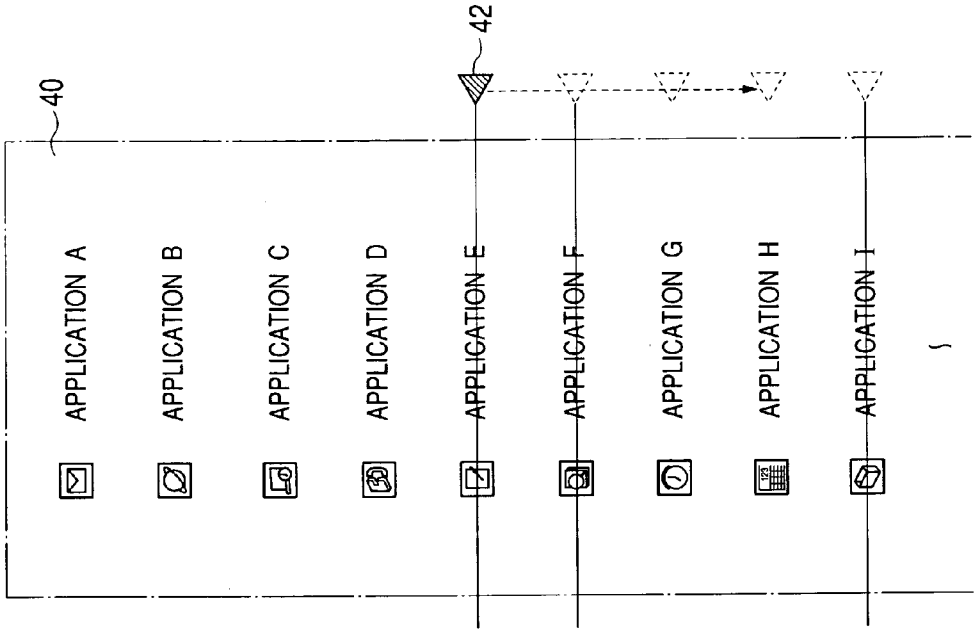

FIG. 38A

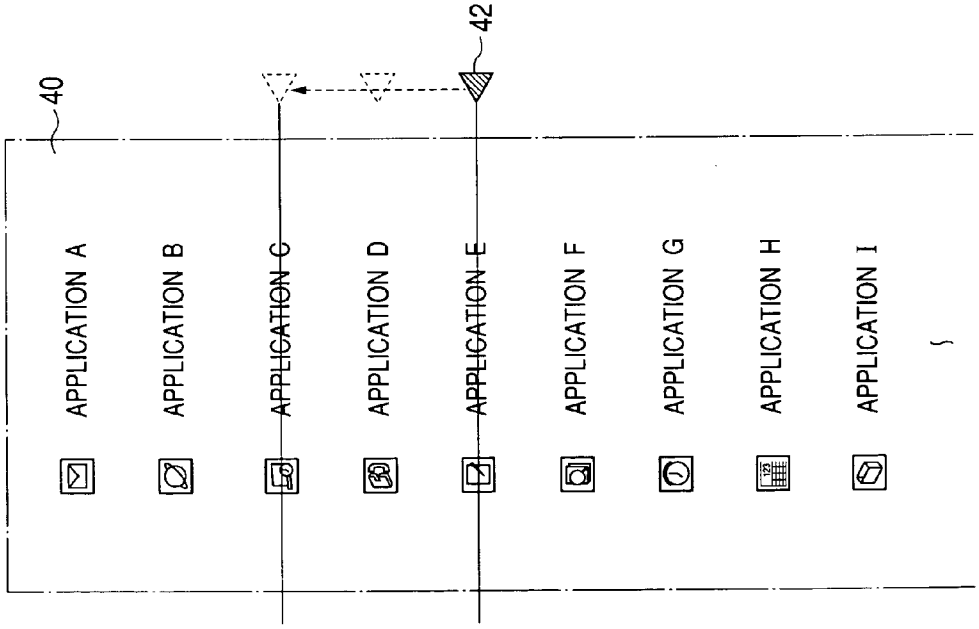

FIG. 39

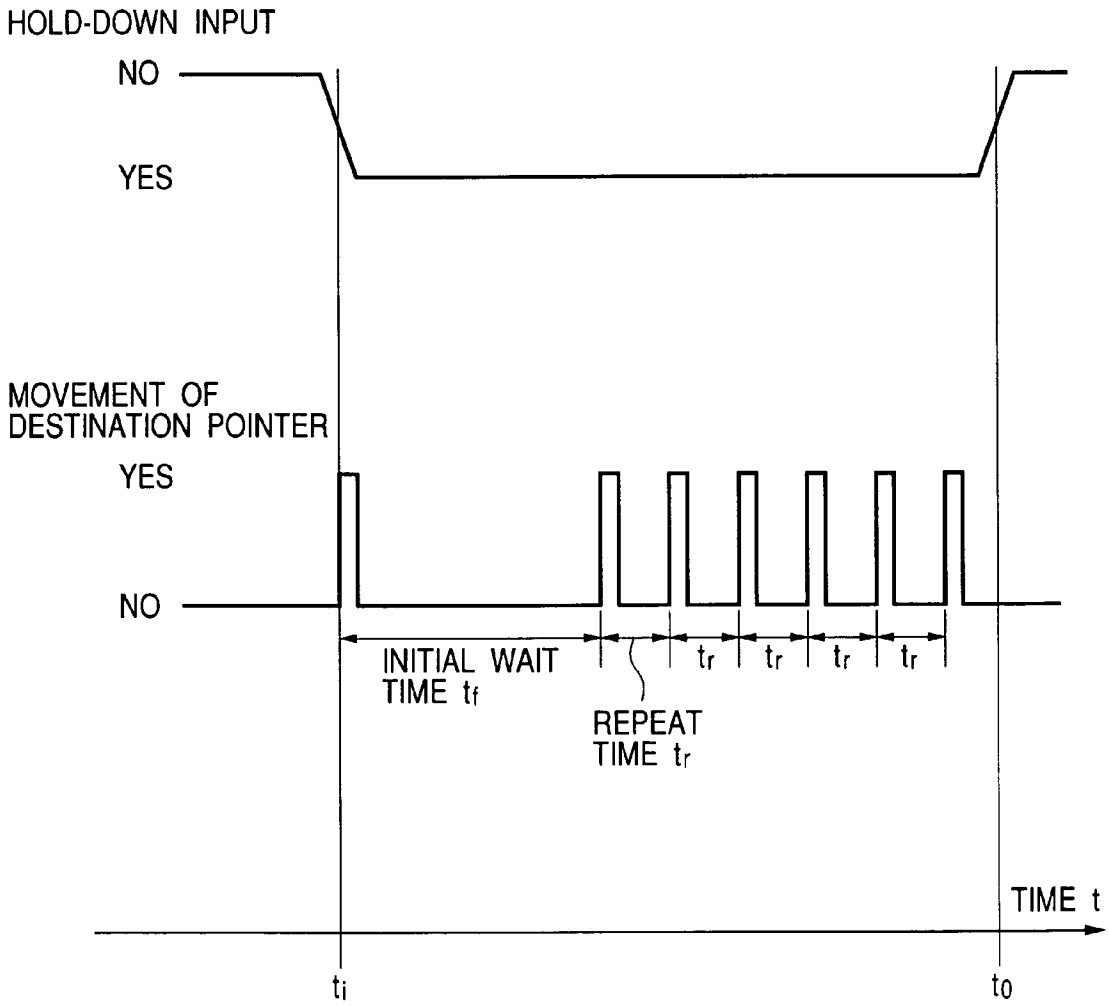
HOLD-DOWN INPUT
NO
YES
MOVEMENT OF
DESTINATION POINTER
YES
NO
INITIAL WAIT
TIME tf
REPEAT
TIME tr
tr
tr
tr
tr
TIME t
ti
to

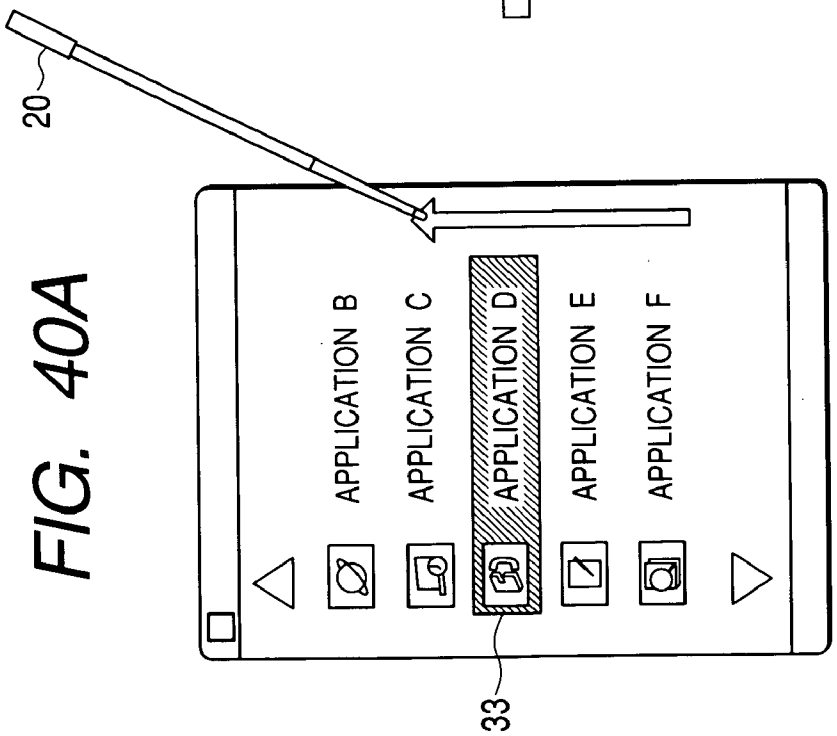

FIG. 40A

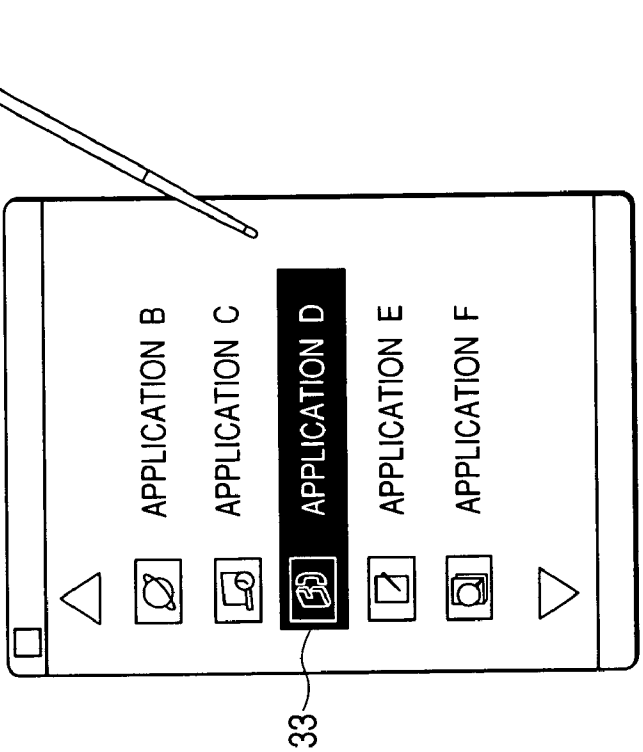

FIG. 40B

FIG. 41

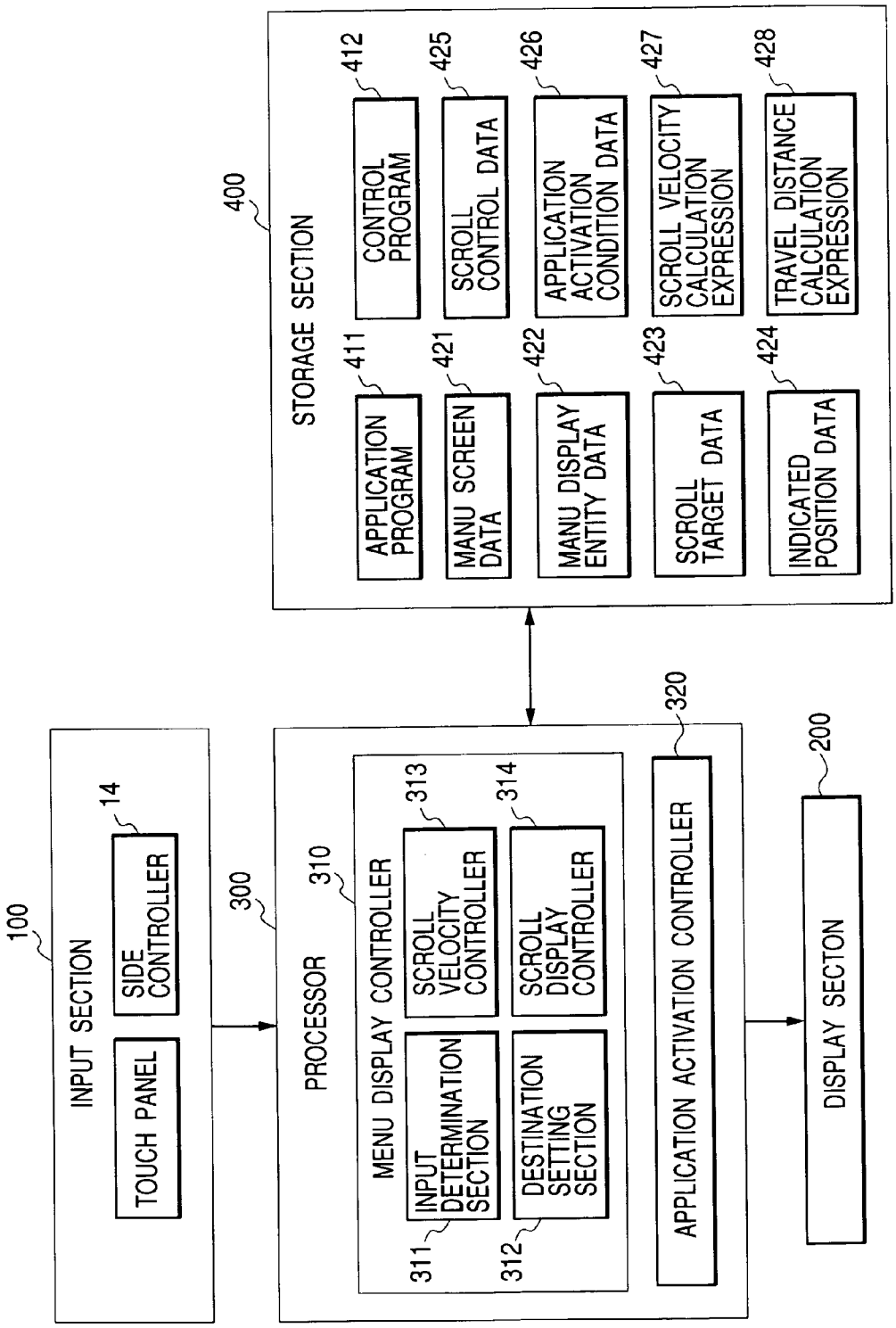
100
INPUT SECTION
TOUCH PANEL
SIDE CONTROLLER
14
300
PROCESSOR
310
MENU DISPLAY CONTROLLER
INPUT DETERMINATION SECTION
311
DESTINATION SETTING SECTION
312
SCROLL VELOCITY CONTROLLER
313
SCROLL DISPLAY CONTROLLER
314
APPLICATION ACTIVATION CONTROLLER
320
400
STORAGE SECTION
APPLICATION PROGRAM
411
CONTROL PROGRAM
412
MANU SCREEN DATA
421
MANU DISPLAY ENTITY DATA
422
SCROLL CONTROL DATA
425
APPLICATION ACTIVATION CONDITION DATA
426
SCROLL TARGET DATA
423
SCROLL VELOCITY CALCULATION EXPRESSION
427
INDICATED POSITION DATA
424
TRAVEL DISTANCE CALCULATION EXPRESSION
428
200
DISPLAY SECTON

FIG. 42

MENU DISPLAY ENTITY DATA

MENU NUMBER	ICON	MENU NAME
1		
2		
⋮	⋮	⋮

FIG. 43A

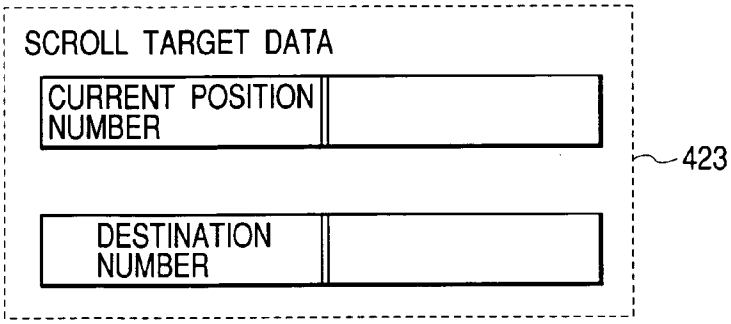

FIG. 43B

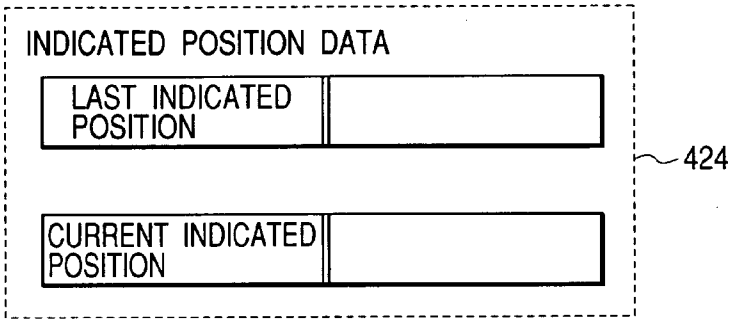

FIG. 43C

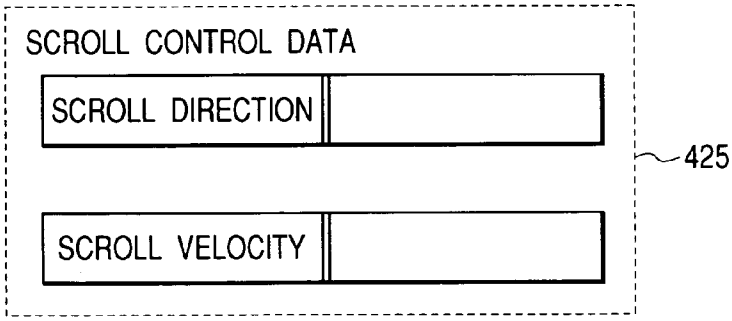

FIG. 43D

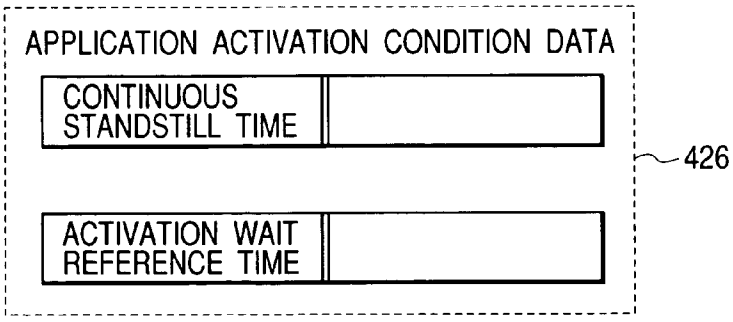

FIG. 44

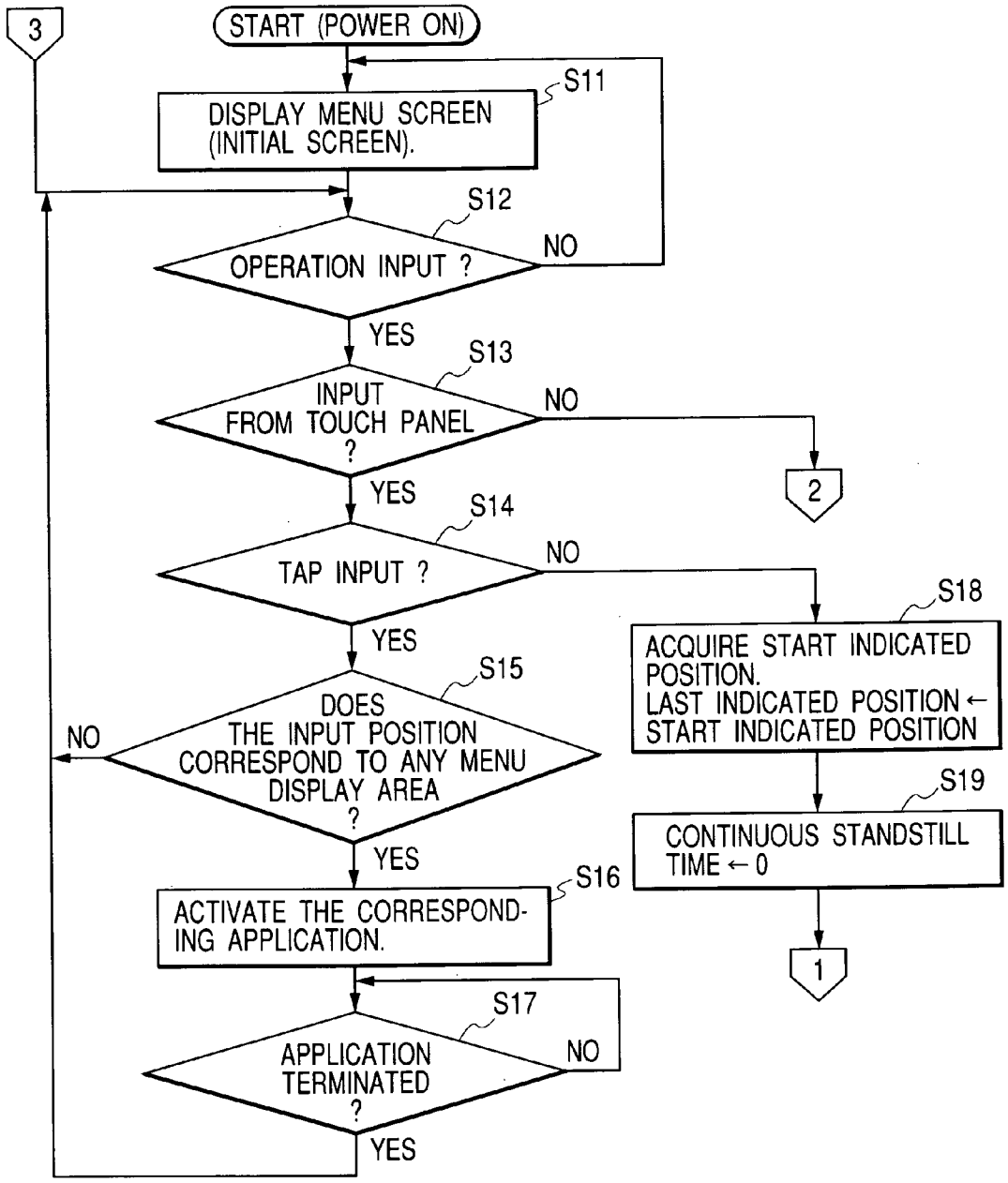
3
START (POWER ON)
S11
DISPLAY MENU SCREEN (INITIAL SCREEN).
S12
OPERATION INPUT ?
NO
YES
S13
INPUT FROM TOUCH PANEL ?
NO
2
YES
S14
TAP INPUT ?
NO
YES
S15
DOES THE INPUT POSITION CORRESPOND TO ANY MENU DISPLAY AREA ?
NO
YES
S16
ACTIVATE THE CORRESPONDING APPLICATION.
S17
APPLICATION TERMINATED ?
NO
YES
S18
ACQUIRE START INDICATED POSITION.
LAST INDICATED POSITION ← START INDICATED POSITION
S19
CONTINUOUS STANDSTILL TIME ← 0
1

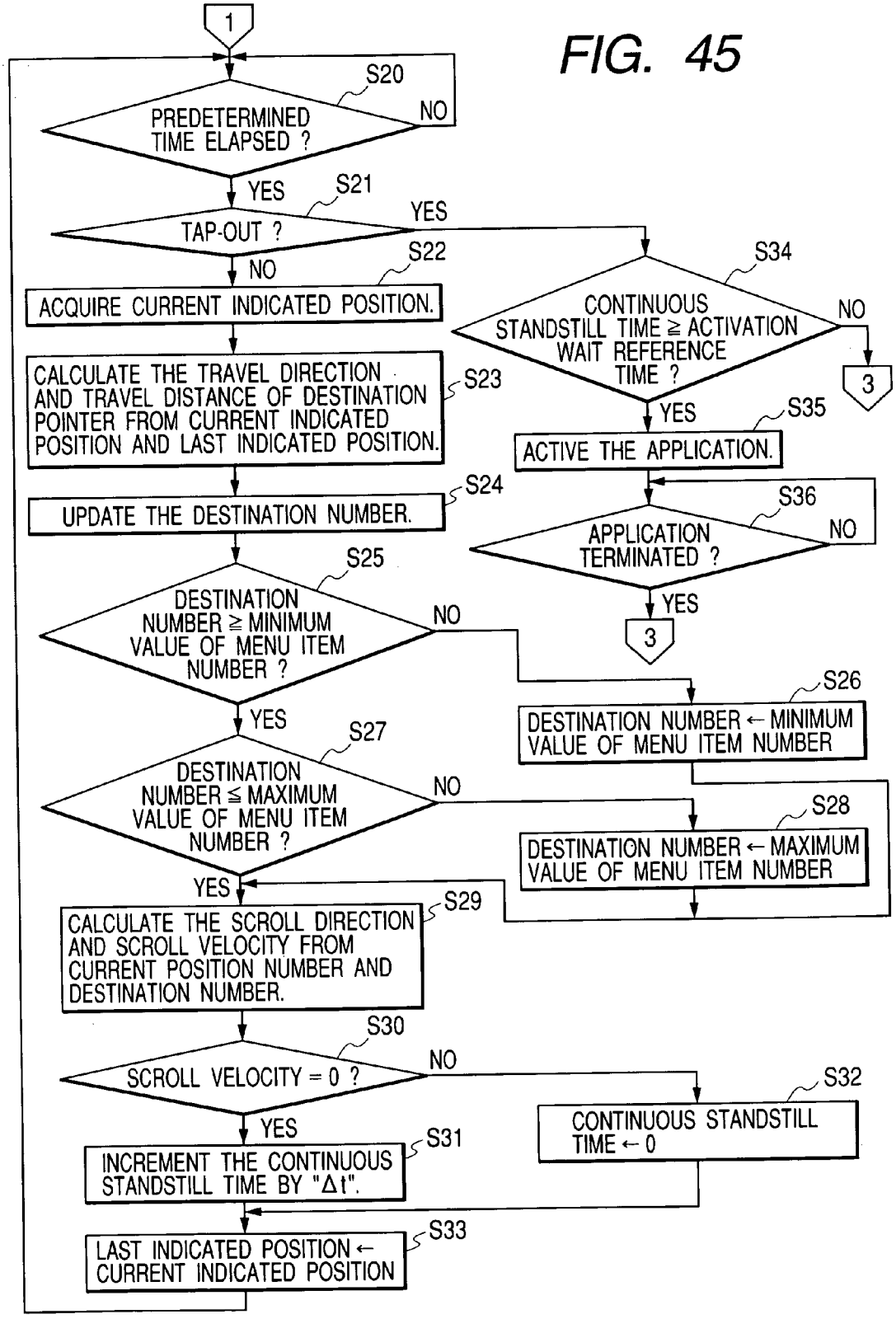
FIG. 45
1
S20
PREDETERMINED TIME ELAPSED ?
NO
YES
S21
TAP-OUT ?
YES
NO
S22
ACQUIRE CURRENT INDICATED POSITION.
CALCULATE THE TRAVEL DIRECTION AND TRAVEL DISTANCE OF DESTINATION POINTER FROM CURRENT INDICATED POSITION AND LAST INDICATED POSITION.
S23
UPDATE THE DESTINATION NUMBER.
S24
S25
DESTINATION NUMBER ≧ MINIMUM VALUE OF MENU ITEM NUMBER ?
NO
YES
S26
DESTINATION NUMBER ← MINIMUM VALUE OF MENU ITEM NUMBER
S27
DESTINATION NUMBER ≦ MAXIMUM VALUE OF MENU ITEM NUMBER ?
NO
S28
DESTINATION NUMBER ← MAXIMUM VALUE OF MENU ITEM NUMBER
YES
S29
CALCULATE THE SCROLL DIRECTION AND SCROLL VELOCITY FROM CURRENT POSITION NUMBER AND DESTINATION NUMBER.
S30
SCROLL VELOCITY = 0 ?
NO
S32
CONTINUOUS STANDSTILL TIME ← 0
YES
S31
INCREMENT THE CONTINUOUS STANDSTILL TIME BY "Δt".
S33
LAST INDICATED POSITION ← CURRENT INDICATED POSITION
S34
CONTINUOUS STANDSTILL TIME ≧ ACTIVATION WAIT REFERENCE TIME ?
NO
3
YES
S35
ACTIVE THE APPLICATION.
S36
APPLICATION TERMINATED ?
NO
YES
3

FIG. 46

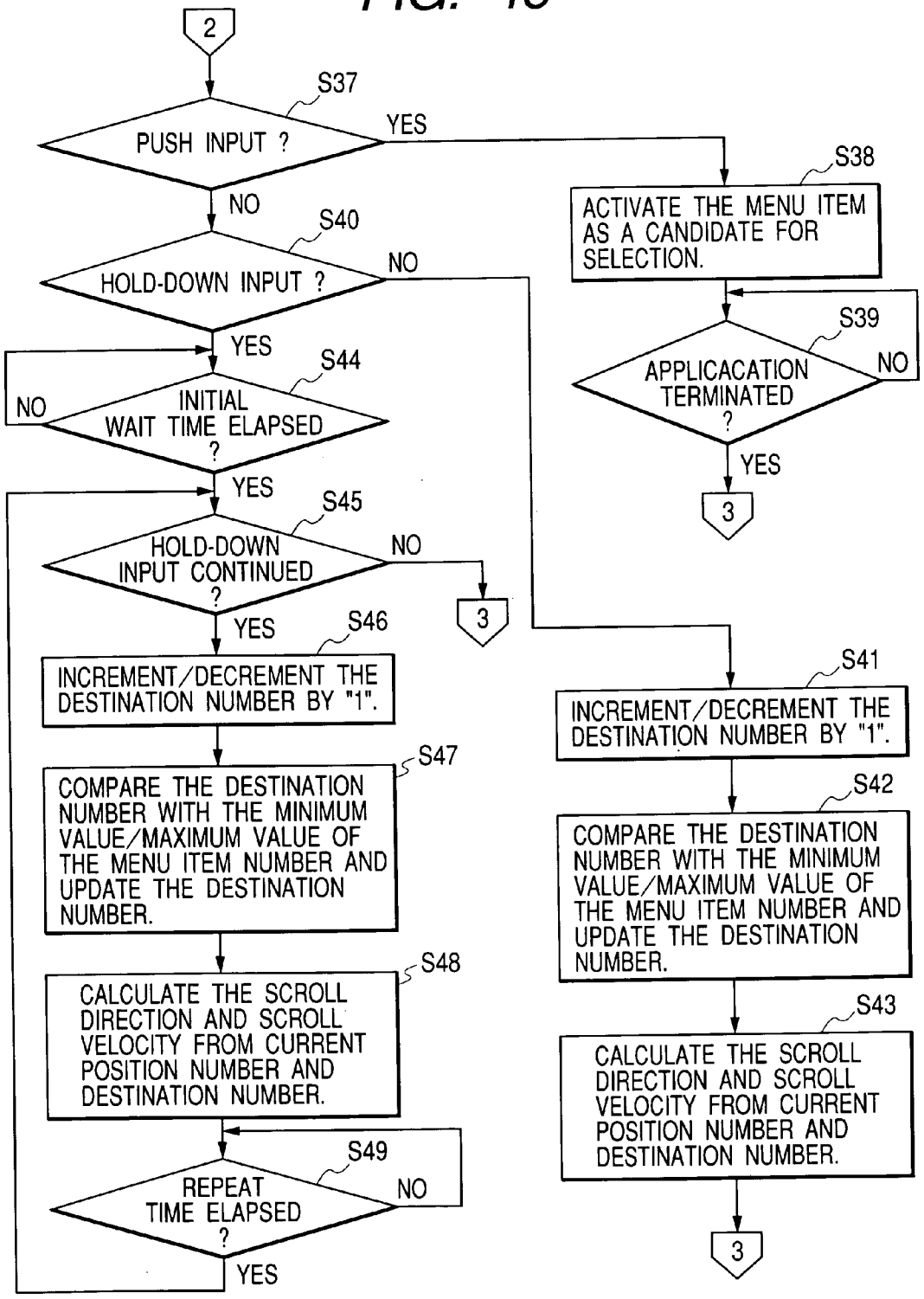
2
S37
PUSH INPUT ?
YES
NO
S38
ACTIVATE THE MENU ITEM AS A CANDIDATE FOR SELECTION.
S40
HOLD-DOWN INPUT ?
NO
S39
APPLICACATION TERMINATED ?
NO
YES
3
YES
S44
NO
INITIAL WAIT TIME ELAPSED ?
YES
S45
HOLD-DOWN INPUT CONTINUED ?
NO
3
YES
S46
INCREMENT/DECREMENT THE DESTINATION NUMBER BY "1".
S41
INCREMENT/DECREMENT THE DESTINATION NUMBER BY "1".
S47
COMPARE THE DESTINATION NUMBER WITH THE MINIMUM VALUE/MAXIMUM VALUE OF THE MENU ITEM NUMBER AND UPDATE THE DESTINATION NUMBER.
S42
COMPARE THE DESTINATION NUMBER WITH THE MINIMUM VALUE/MAXIMUM VALUE OF THE MENU ITEM NUMBER AND UPDATE THE DESTINATION NUMBER.
S48
CALCULATE THE SCROLL DIRECTION AND SCROLL VELOCITY FROM CURRENT POSITION NUMBER AND DESTINATION NUMBER.
S43
CALCULATE THE SCROLL DIRECTION AND SCROLL VELOCITY FROM CURRENT POSITION NUMBER AND DESTINATION NUMBER.
S49
REPEAT TIME ELAPSED ?
NO
YES
3

FIG. 47B

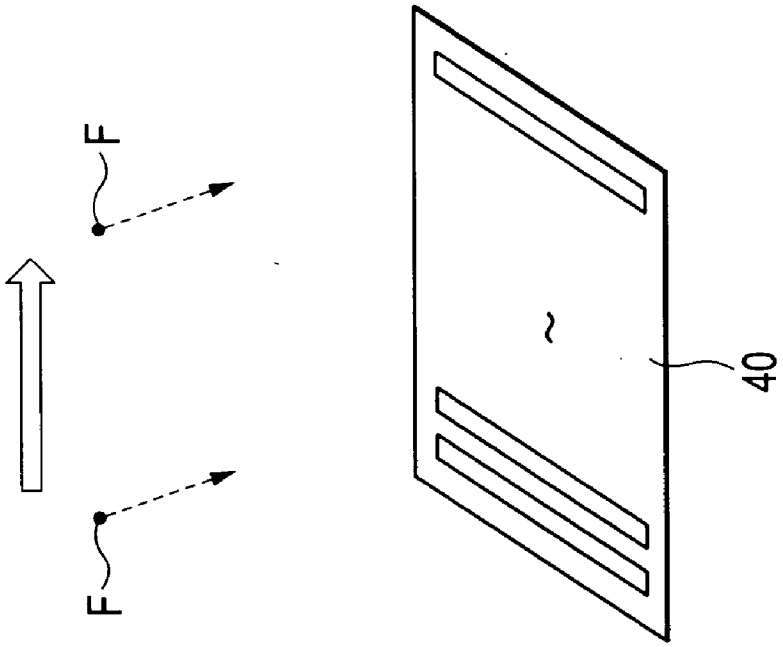

FIG. 47A

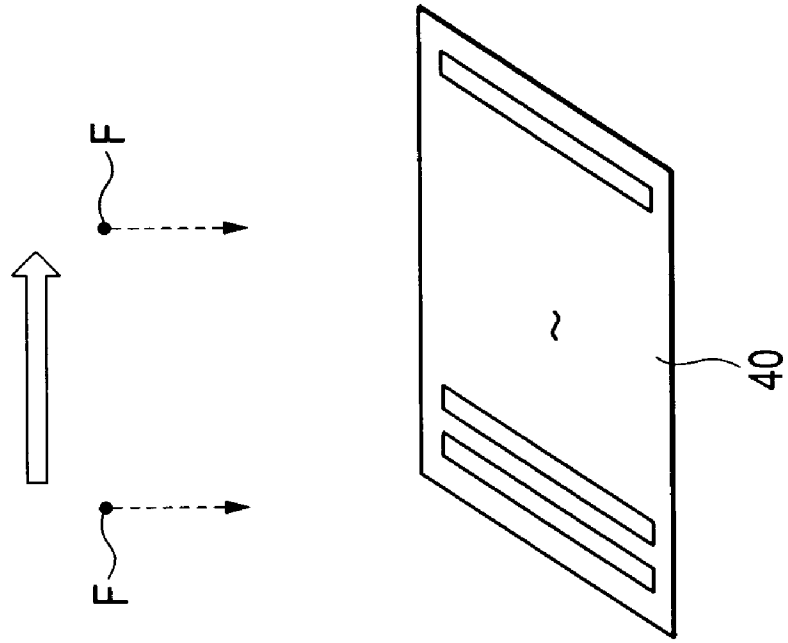

FIG. 48

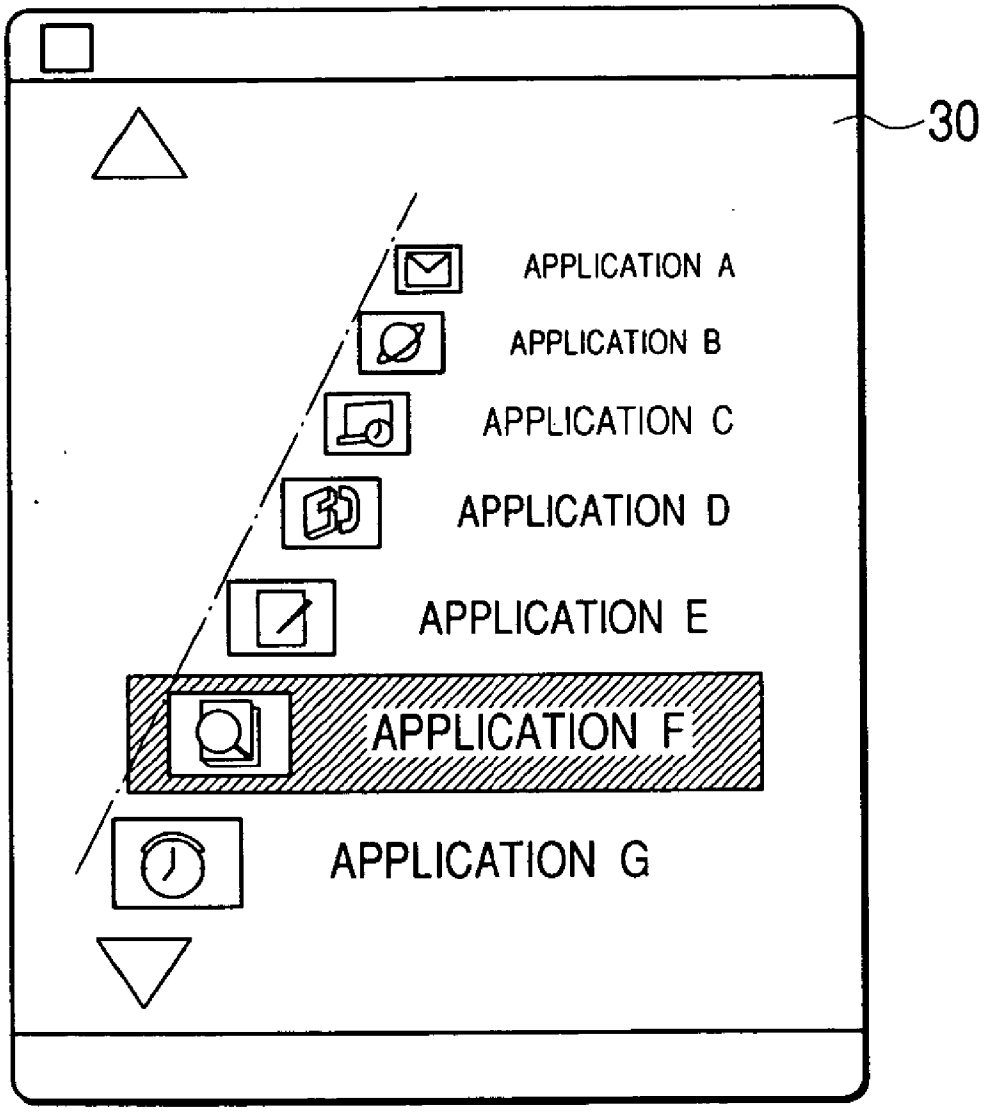
30
APPLICATION A
APPLICATION B
APPLICATION C
APPLICATION D
APPLICATION E
APPLICATION F
APPLICATION G

FIG. 49A

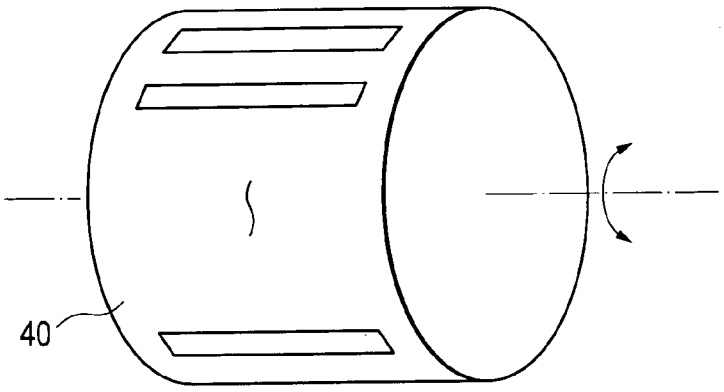

FIG. 49B

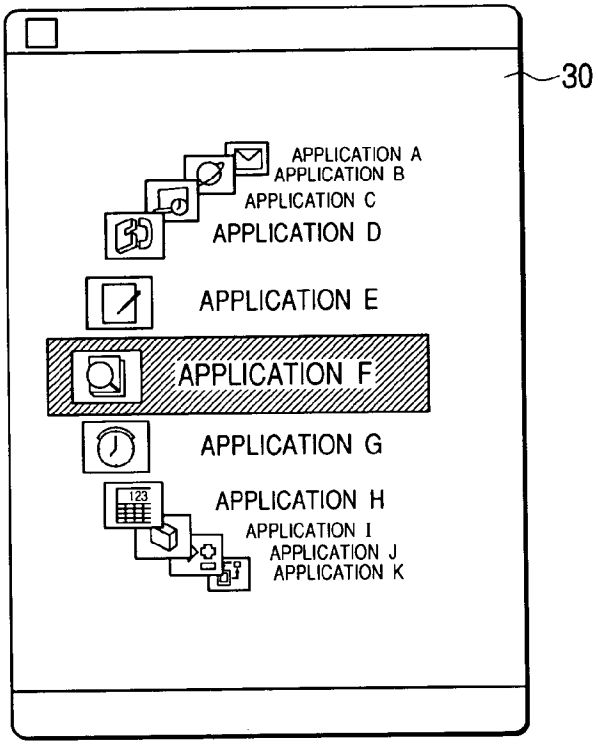

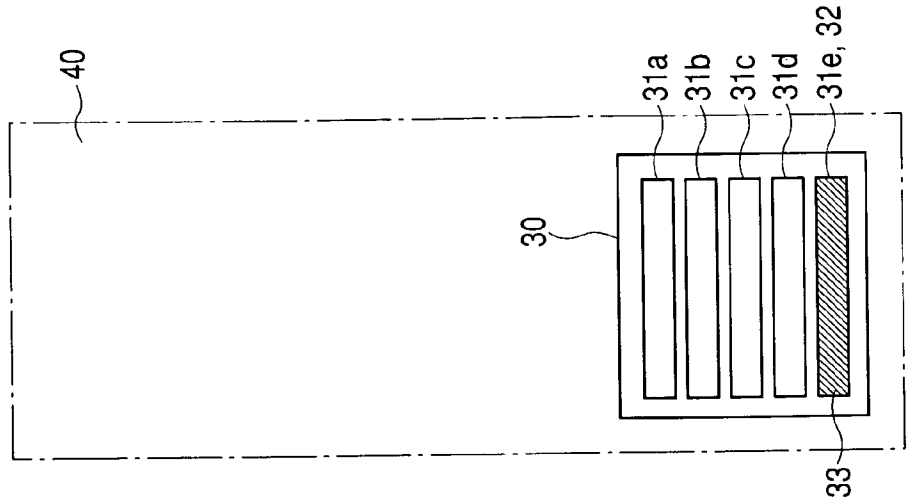
FIG. 50C
40
30
31a
31b
31c
31d
31e, 32
33

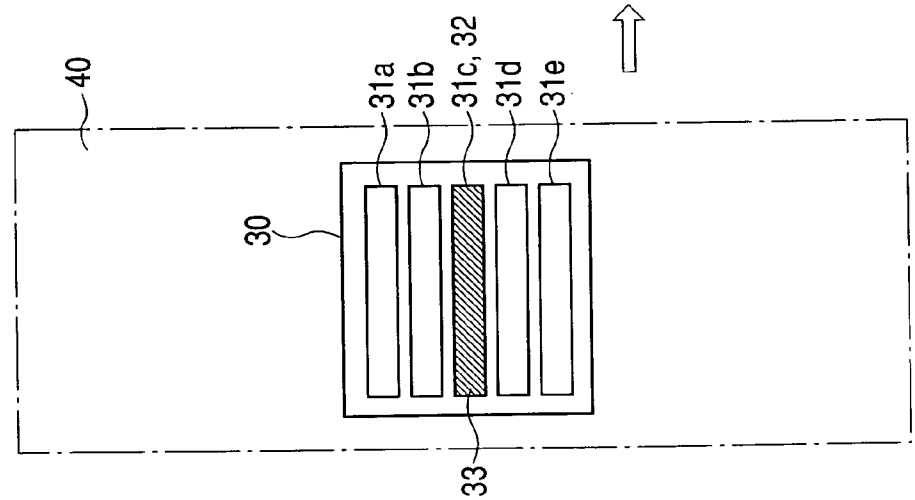
FIG. 50B
40
30
31a
31b
31c, 32
31d
31e
33

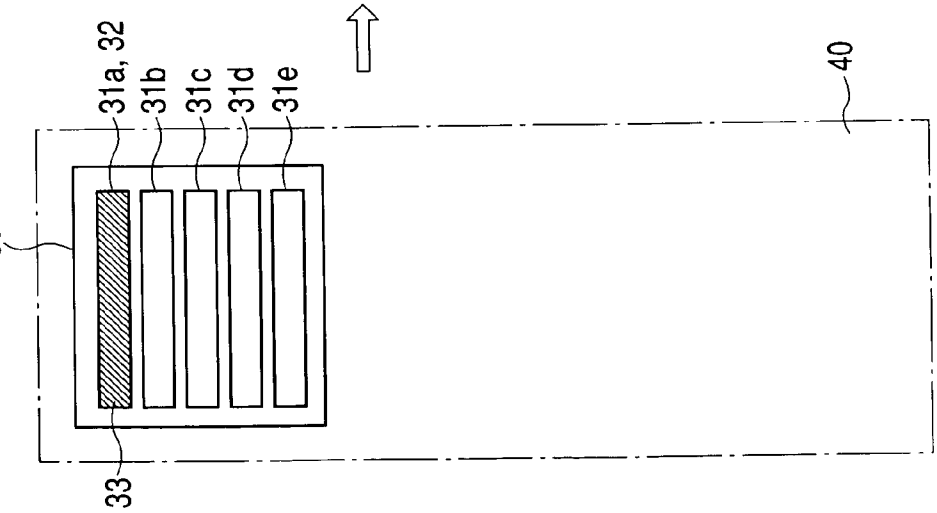
FIG. 50A
30
31a, 32
31b
31c
31d
31e
33
40

FIG. 51

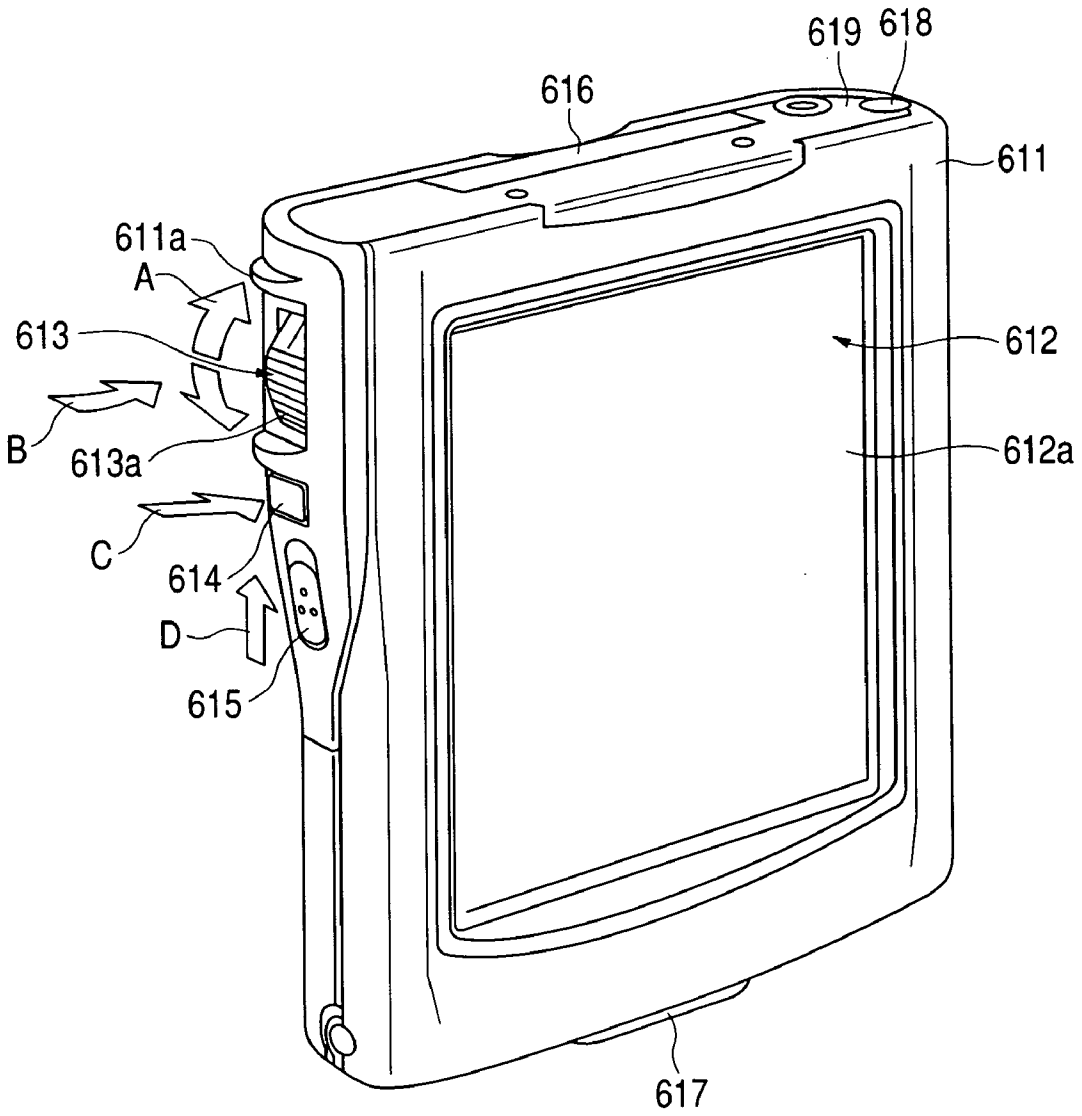

FIG. 52

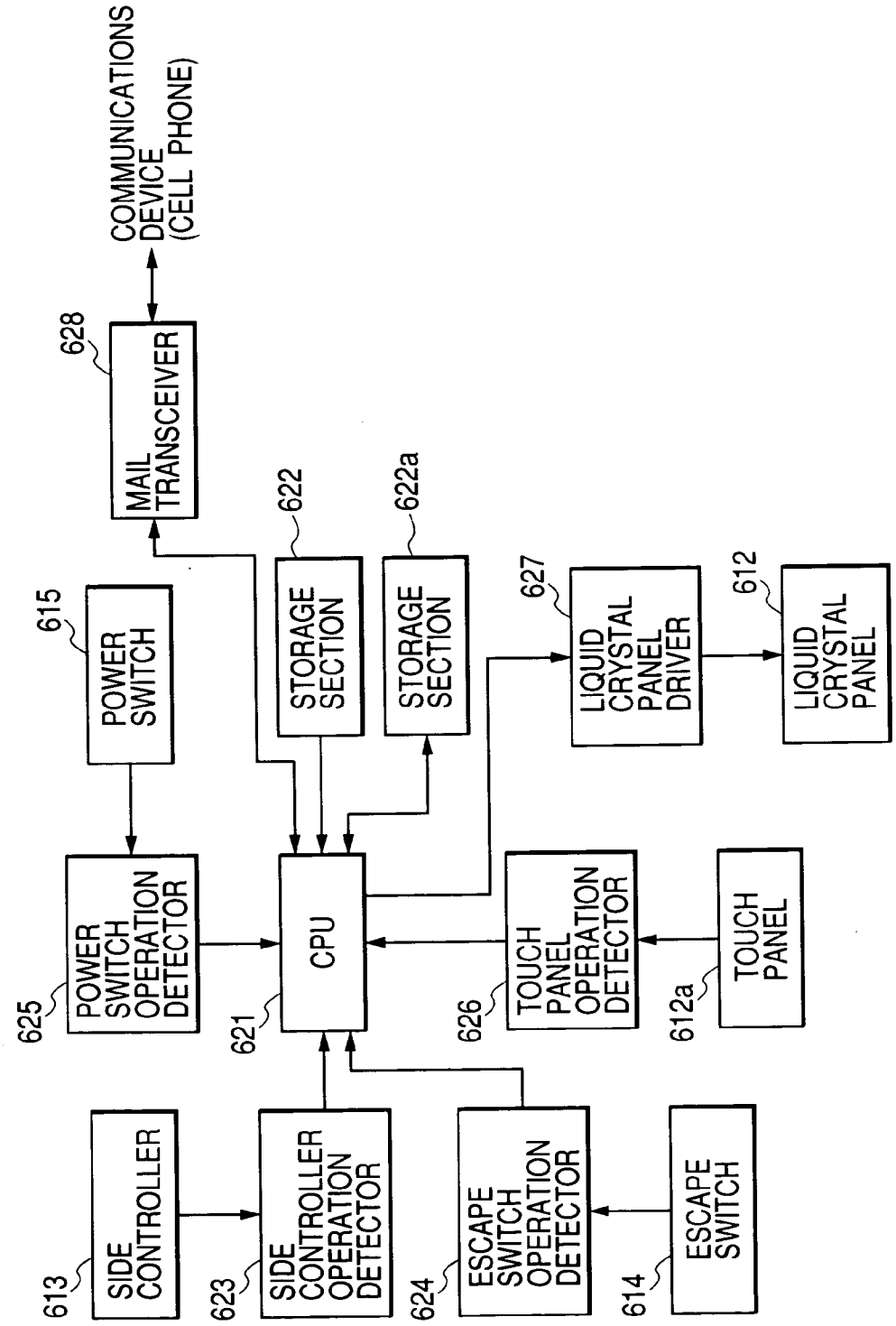
COMMUNICATIONS DEVICE (CELL PHONE)
628
MAIL TRANSCEIVER
615
POWER SWITCH
622
STORAGE SECTION
622a
STORAGE SECTION
627
LIQUID CRYSTAL PANEL DRIVER
612
LIQUID CRYSTAL PANEL
625
POWER SWITCH OPERATION DETECTOR
621
CPU
626
TOUCH PANEL OPERATION DETECTOR
612a
TOUCH PANEL
613
SIDE CONTROLLER
623
SIDE CONTROLLER OPERATION DETECTOR
624
ESCAPE SWITCH OPERATION DETECTOR
614
ESCAPE SWITCH

FIG. 53A

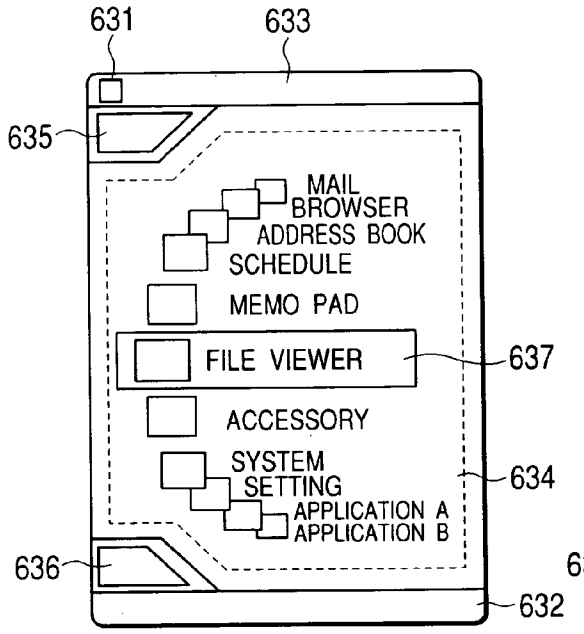

FIG. 53B

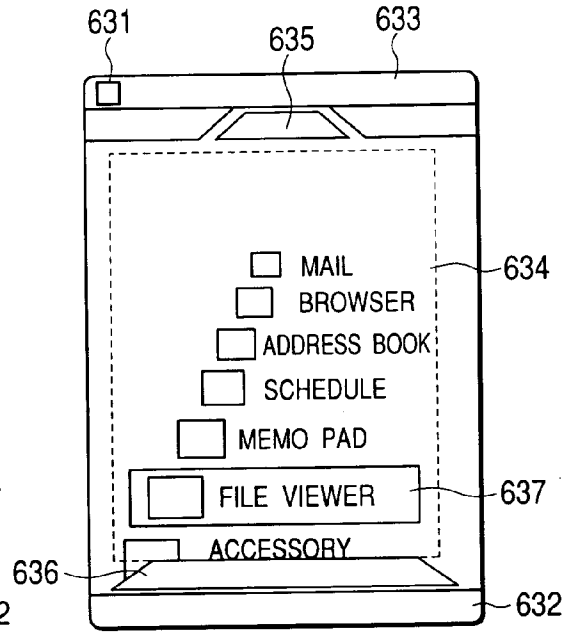

FIG. 53C

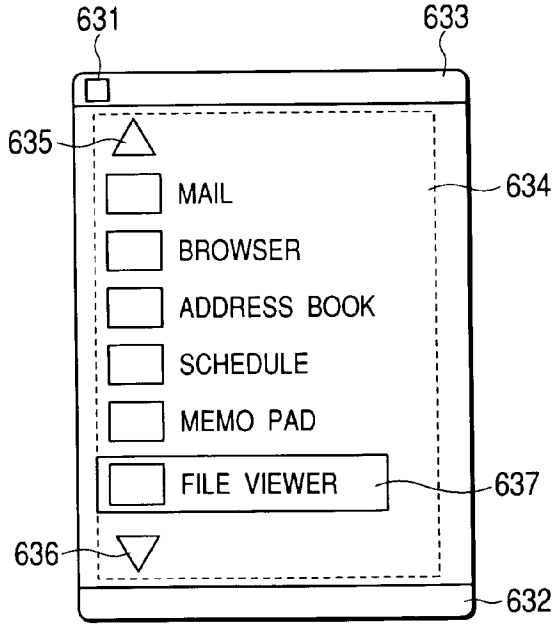

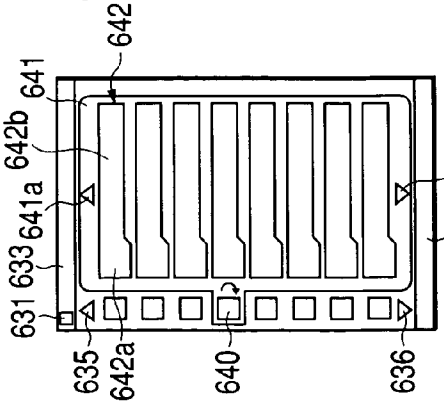

FIG. 54A

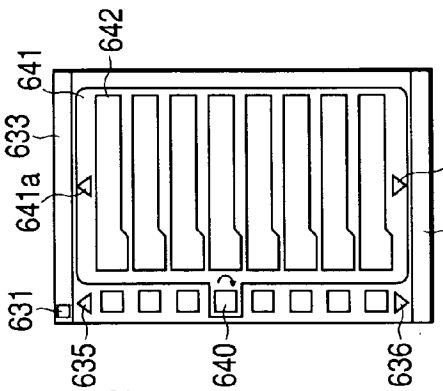

FIG. 54B

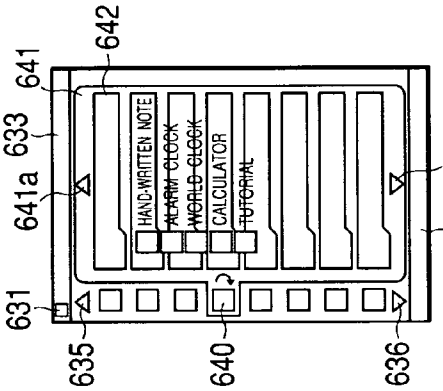

FIG. 54C

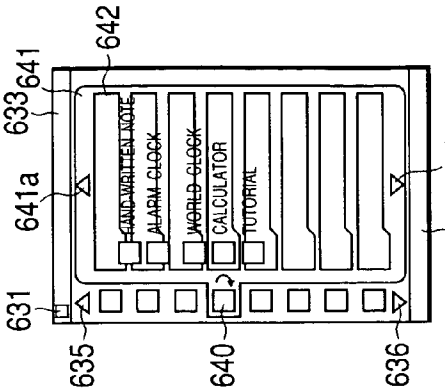

FIG. 54D

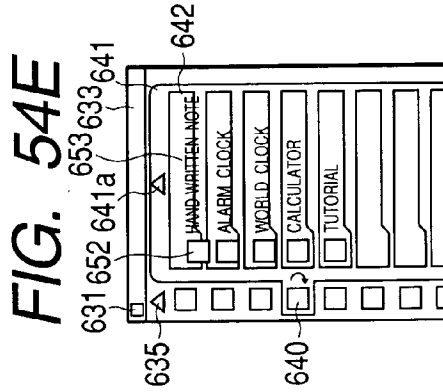

FIG. 54E

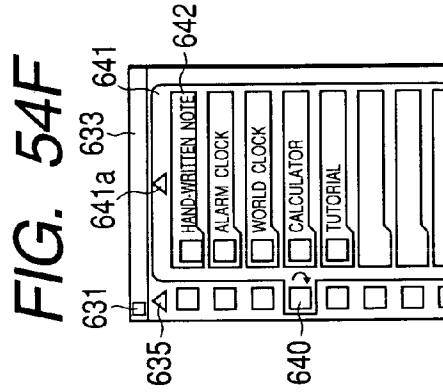

FIG. 54F

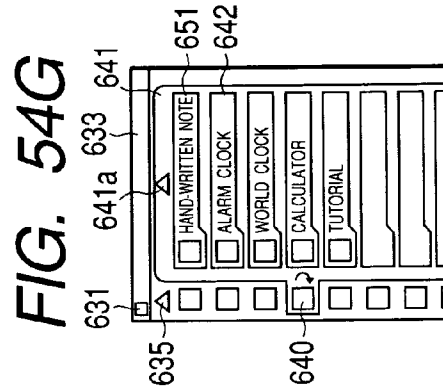

FIG. 54G

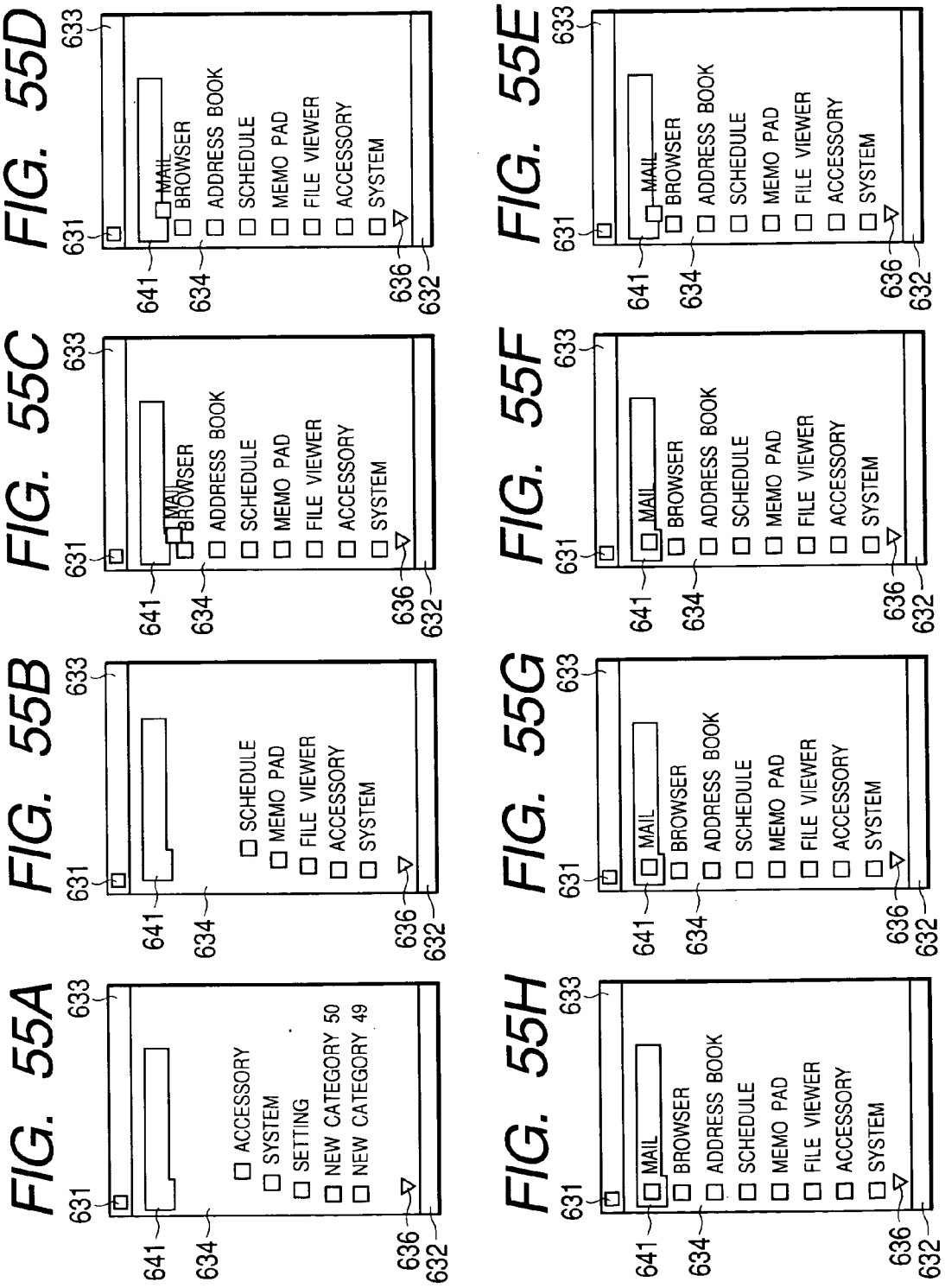
FIG. 55A
631
633
641
634
636
632
ACCESSORY
SYSTEM
SETTING
NEW CATEGORY 50
NEW CATEGORY 49
FIG. 55B
631
633
641
634
636
632
SCHEDULE
MEMO PAD
FILE VIEWER
ACCESSORY
SYSTEM
FIG. 55C
631
633
641
634
636
632
MAIL
BROWSER
ADDRESS BOOK
SCHEDULE
MEMO PAD
FILE VIEWER
ACCESSORY
SYSTEM
FIG. 55D
631
633
641
634
636
632
MAIL
BROWSER
ADDRESS BOOK
SCHEDULE
MEMO PAD
FILE VIEWER
ACCESSORY
SYSTEM
FIG. 55E
631
633
641
634
636
632
MAIL
BROWSER
ADDRESS BOOK
SCHEDULE
MEMO PAD
FILE VIEWER
ACCESSORY
SYSTEM
FIG. 55F
631
633
641
634
636
632
MAIL
BROWSER
ADDRESS BOOK
SCHEDULE
MEMO PAD
FILE VIEWER
ACCESSORY
SYSTEM
FIG. 55G
631
633
641
634
636
632
MAIL
BROWSER
ADDRESS BOOK
SCHEDULE
MEMO PAD
FILE VIEWER
ACCESSORY
SYSTEM
FIG. 55H
631
633
641
634
636
632
MAIL
BROWSER
ADDRESS BOOK
SCHEDULE
MEMO PAD
FILE VIEWER
ACCESSORY
SYSTEM

FIG. 56

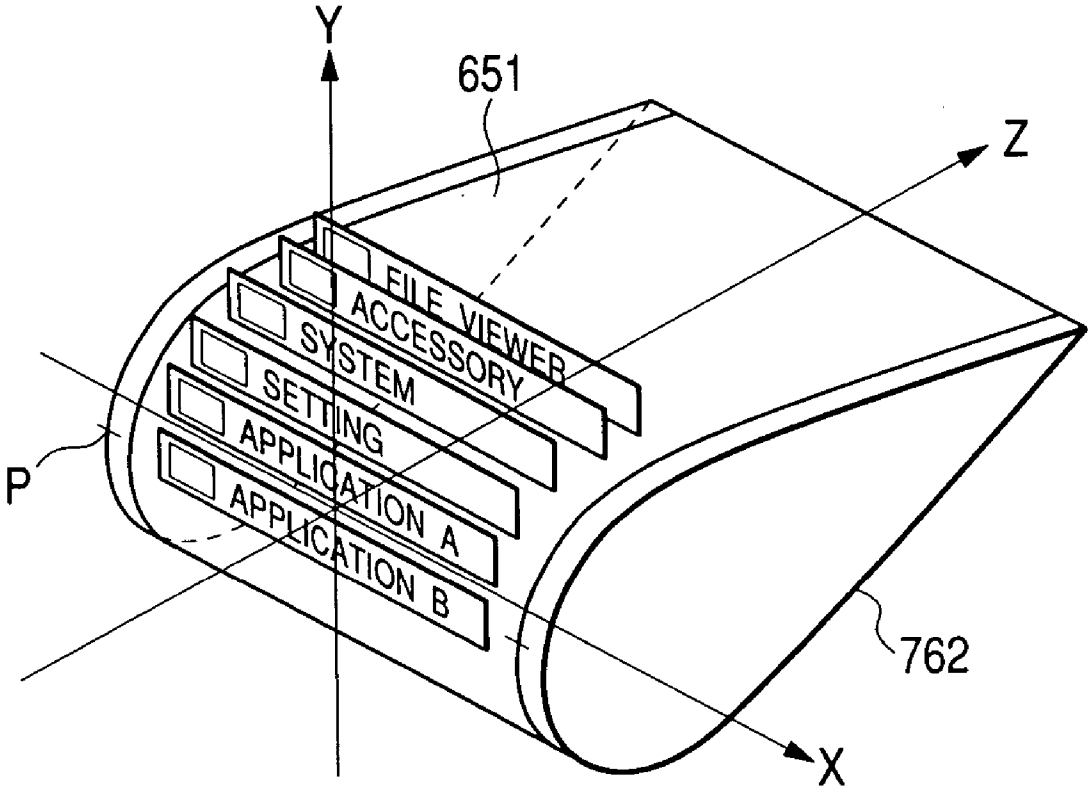
Y
651
Z
FILE VIEWER
ACCESSORY
SYSTEM
SETTING
APPLICATION A
APPLICATION B
P
762
X

PORTABLE INFORMATION TERMINAL, DISPLAY CONTROL DEVICE, DISPLAY CONTROL METHOD, AND COMPUTER READABLE PROGRAM THEREFOR

BACKGROUND OF THE INVENTION

[0001] The present invention relates to a display control device for performing display control of menu display, portable information terminal, and display control information and a display control method for allowing a computer to perform display control of menu display.

BACKGROUND ART

[0002] As an example of portable information terminal which allows the user to carry along various personal information as digital information, a so-called Personal Digital Assistant (PDA) equipped with a touch panel is known.

[0003] The PDA can execute a plurality of application software programs (also referred to as simply "applications") by way of arithmetic operation by a built-in CPU. Application software includes schedule software, address book software, memo pad software, word processing software, calculator software, electronic mail software, web browser software, music playback software, graphics viewer software, and clock display software.

[0004] Operation of selection and execution of application software is controlled by the application management program called "launcher". With application software programs and/or documents registered in advance, the application software programs and/or documents are displayed on a menu by the launcher, and directly started via simple input operation.

[0005] In the related art menu display by the launcher, icons representing application software programs and/or documents and their names are displayed in sets (the sets are hereinafter referred to as "menu items"), arranged like tiles on a plane. The user selects any menu item by way of operation of a button such as a lever and across-hair key, or selection using a pointing device such as a stylus pen or a tracking pad.

[0006] The size of a physical display screen of the PDA is limited, for example, within the palm of a hand of an adult in order to focus on the portability. Thus, a menu display entity which extends off screen must be displayed by scrolling through the screen. The scroll operation is made though operation of a button such as a lever or tapping operation on a specific position using a stylus pen. To be more specific, in case the user holds a PDA in his/her left hand, the user uses a finger of his/her left hand, for example the thumb, to operate the PDA. Or, the user performs tapping operation on a specific position (scroll target position) with a stylus pen in his/her right hand.

[0007] However, in a scroll operation and selection of a menu display entity, at least two operations are required. The scroll operation on a touch panel is the same as the mouse operation, for example tapping operation, on an ordinary PC.

[0008] As a method for solving such problems, a method for displaying more menu items on the screen via three-dimensional menu display is disclosed, for example in the Japanese Patent Laid-Open No. 391232/1999, Japanese Patent Laid-Open No. 65806/1999, Japanese Patent Laid-Open No. 95968/1999, and Japanese Patent Laid-Open No. 2001-291119.

[0009] Even according to the method disclosed in each of the publications, a menu arranged in a virtual space does not always faces a virtual camera and the visibility of the resulting menu is poor. It is difficult to find which part of the registered menu items is currently displayed by glancing at the screen. The user must look for the target menu item by way of icons. Such operation is very inconvenient.

[0010] For example, display control of a menu screen is described in the Publication No. WO00/33571 (hereinafter referred to as the related art example) is known. In this method, an icon is selected from a menu screen where icons are arranged. Display is switched via a transition screen in switchover to the information screen for the selected icon. In the transition screen, the selected icon is gradually scaled up. The scaled-up icon gradually turns fainter to perform switchover to the information screen.

[0011] In the related art example, when the information screen is switched to the menu screen, the scale-up icon display is gradually scaled down to select the menu screen from the scale-up icon display.

[0012] In the Japanese Patent Laid-Open No. 2000-10702, there is described a method where a screen is split to form a plurality of split screen and function menus are assigned to these split screens, and a split screen displaying a desired menu is enlarged in the center of the screen for the user's menu selection in response to a screen key operation.

[0013] The Japanese Patent Laid-Open No. 263255/1996 discloses a method for changing the display size of an icon depending on the depth of the layer level. In this method, a predetermined operation specifying a display area of a desired layer provides a doomed-in image of the desired layer.

[0014] On the Personal Digital Assistant (PDA), menu items which extend off screen must be displayed by scrolling through the screen. In this practice, it is difficult to find which part of the large number of menu items is currently displayed by glancing at the screen. The user must look for the target menu item by way of icons.

[0015] While the display screen is scaled up or down through zoom-in or zoom-out operation in the related art examples, it is difficult to find which part of the large number of menu items is currently displayed by glancing at the screen. For a device with a small display size such as a PDA, simply arranging menu items on a plane provides poor visibility. Also, it is difficult to properly arrange a large number of menu items to enhance the operability.

SUMMARY OF THE INVENTION

[0016] The invention has been accomplished in order to solve the aforementioned problems and aims at providing easy-to-use menu display which allows easy understanding of arrangement of menu items used for a portable information terminal.

[0017] The invention also aims at enhancing the operability of menu display used for a portable information terminal equipped with a touch panel.

[0018] In order to solve the problems, the invention provides a display control device for performing display control, the display control device comprising: virtual space setting means for setting a virtual space (for example a menu display controller **24** in **FIG. 5**); virtual face setting means (for example the menu display controller **24** in **FIG. 5**) for setting a virtual face (for example a travel locus Lf**4** in **FIG. 4, a** virtual entity **160***a* in **FIG. 21**) in a predetermined plane in the virtual space; display entity arrangement means (for example a display position setting section **240**, a menu arrangement section **241** in **FIG. 5**) for arranging a plurality of plane-shaped information display entities parallel with each other (for example a menu panel **134** in **FIG. 2**) at least in a column so that the planes will differ from the predetermined plane; camera setting means (for example a camera setting section **245** in **FIG. 5**) for setting a virtual camera whose line of sight is oriented to face the virtual face; input means (for example a touch panel **104**, a stylus pen **106**, a side controller **108** in **FIG. 1, a** scroll-up icon **136**, a scroll-down icon **138** in **FIG. 2**, an operation input section **10**, a menu item selector **22** in **FIG. 5**) for inputting a scroll direction; movement means (for example a menu movement controller **24** in **FIG. 5**) for moving one or both of the virtual face and the virtual camera by way of the input means; and control means (for example a menu arrangement section **241** in **FIG. 5**) for controlling the arrangement of the plurality of information entities on the virtual face so that a plane orthogonal to the line of sight of the virtual camera will be parallel with the planes of the plurality of information display entities in accordance with the movement by the movement means; characterized in that the display control device performs information display by displaying, in whole or in part, the information display entities seen from the virtual camera among the plurality of information display entities.

[0019] The invention provides a display control method for the display control device, the display control method comprising: a virtual space setting step of setting a virtual space; a virtual face setting step for setting a virtual face in a predetermined plane in the virtual space; a display entity arrangement step of arranging a plurality of plane-shaped information display entities parallel with each other at least in a column so that the planes will differ from the predetermined plane; a camera setting step for setting a virtual camera whose line of sight is oriented to face the virtual face; an input step of inputting a scroll direction; a movement step of moving one or both of the virtual face and the virtual camera by way of an input in the input step; and a control step of controlling the arrangement of the plurality of information entities on the virtual face so that a plane orthogonal to the line of sight of the virtual camera will be parallel with the plane of the plurality of information display entities in accordance with the movement in the movement step; characterized in that the display control method causes the display control device to perform information display by displaying, in whole or in part, the information display entities seen from the virtual camera among the plurality of information display entities.

[0020] The information display entity is a model arranged in a third-dimensional virtual space and defined with vertex coordinates and curves. The display control information is information equivalent to a program used for processing by an electronic calculator (computer) such as a portable information terminal.

[0021] According to the invention, the information display entity is arranged three-dimensionally in a virtual space and its plane always faces a virtual camera. Thus it is possible to efficiently display more information display entities. It is also possible to provide easy-to-see display of the information displayed in the information display entities. Thus it is easy to identify an information display entity even on a relatively small display screen thereby enhancing the operability.

[0022] The invention provides a display control device for performing display control, the display control device comprising: virtual space setting means for setting a virtual space (for example a menu display controller **24** in **FIG. 5**) in which are arranged a rotation axis (for example the X axis in **FIG. 3**), a virtual face comprising a locus of an arbitrary curve (for example travel locuss Lf**1** through LF**3** in **FIG. 3**) orthogonal to the rotation axis obtained when the curve moves in parallel with the rotation axis, and a plurality of plane-shaped information display entities parallel with each other; display entity arrangement means (for example a display position setting section **240**, a menu arrangement section **241** in **FIG. 5**) for arranging the plurality of plane-shaped information display entities at least in a column so that an arbitrary line on the virtual face parallel with the rotation axis will be shared; camera setting means for setting a virtual camera whose line of sight is oriented to face the virtual face; input means for inputting a scroll direction; and movement means (for example a menu display controller **24** in **FIG. 5**) for rotating one or both of the virtual face and the virtual camera about the rotation axis; characterized in that the display control device performs information display by displaying, in whole or in part, the information display entities seen from the virtual camera among the plurality of information display entities.

[0023] The invention provides a display control device for performing display control, the display control device comprising: virtual space setting means for setting a virtual space; virtual entity setting means for setting a body-of-rotation-shaped virtual entity (for example a virtual entity **160***b* in **FIG. 22**) in the virtual space; display entity arrangement means for arranging a plurality of plane-shaped information display entities parallel with each other at least in a column on a virtual face as one face of the virtual entity; camera setting means for setting a virtual camera whose line of sight is oriented to face the virtual face; input means for inputting a scroll direction; and movement means for rotating one or both of the virtual face and the virtual camera about the rotation axis of the virtual entity; characterized in that the display control device performs information display by displaying, in whole or in part, the information display entities seen from the virtual camera among the plurality of information display entities.

[0024] The invention provides a display control method for the display control device, the display control method comprising: a virtual space setting step of setting a virtual space in which are arranged a rotation axis, a virtual face comprising a locus of an arbitrary curve orthogonal to the rotation axis obtained when the curve moves in parallel with the rotation axis, and a plurality of plane-shaped information display entities parallel with each other; a display entity arrangement step of arranging the plurality of plane-shaped information display entities at least in a column so that an arbitrary line on the virtual face parallel with the rotation

axis will be shared; a camera setting step of setting a virtual camera whose line of sight is oriented to face the virtual face; an input step of inputting a scroll direction; and a movement step of rotating one or both of the virtual face and the virtual camera about the rotation axis of the virtual entity; characterized in that the display control method causes the display control device to perform information display by displaying, in whole or in part, the information display entities seen from the virtual camera among the plurality of information display entities.

[**0025**] The invention provides a display control method for the display control device, the display control device comprising: a virtual space setting step of setting a virtual space; a virtual entity setting step of setting a body-of-rotation-shaped virtual entity in the virtual space; a display entity arrangement step for arranging a plurality of plane-shaped information display entities parallel with each other at least in a column on a virtual face as one face of the virtual entity; a camera setting step of setting a virtual camera whose line of sight is oriented to face the virtual face; an input step of inputting a scroll direction; and a movement step of rotating one or both of the virtual face and the virtual camera about the rotation axis of the virtual entity; characterized in that the display control method causes the display control device to perform information display by displaying, in whole or in part, the information display entities seen from the virtual camera among the plurality of information display entities.

[**0026**] The arbitrary curve will be a closed curve or a segment. Thus, on a virtual face is formed an extruded face in the direction of a rotation axis having an arbitrary curve as a cross section. For example, a lateral face of a cylinder is formed.

[**0027**] According to the invention, an information display entity is three-dimensionally arranged in a virtual space and changes its topology as the display is scrolled through. Thus, from the difference between topologies, it is possible to readily recognize which part of a plurality of information display entities is currently displayed.

[**0028**] The display control device is characterized by further comprising control means (for example a menu display controller **24** in **FIG. 5**) for controlling the arrangement of the plurality of information display entities on the virtual face so that the so that a plane orthogonal to the line of sight of the virtual camera will be parallel with the plane of the plurality of information display entities in accordance with the movement by the movement means. It is thus possible to always arrange the face of an information display entity to face a virtual camera, thus making the display of an information display entity more visible.

[**0029**] The display control device is characterized by further comprising camera movement means (for example a camera setting section **245** in **FIG. 5**) for moving the virtual camera in the travel direction or in a direction opposite to the direction. By moving the virtual camera in the direction opposite to the travel direction of the information display entity, high-velocity scrolling is provided.

[**0030**] By moving the virtual camera in the same direction as the travel direction of the information display entity, it is possible to change as appropriate the position of the information display entity closest to the virtual camera on the display screen. For example, in case the head of the line of an information display entity is in a position closest to the virtual camera, moving the virtual camera so as to display the information display entity on the upper area of the screen efficiently uses the screen and allows as many information display entities as possible subsequent to the information display entity to be displayed.

[**0031**] When moving the both (a virtual face or a virtual entity, and a virtual camera), the movement means may move both at travel velocities different from each other. As a result, it is possible to prevent a camera sickness (a sense similar to dizziness or sickness caused by watching fluctuations on the display screen or succession of sudden movement) caused by the relative difference in the travel velocity between the virtual face or virtual entity and the virtual camera.

[**0032**] The display control device may further comprise line-of-sight direction change means (for example a camera setting section **245** in **FIG. 5**) for gradually changing the direction of the line of sight of the virtual camera in accordance with the travel amount of the virtual camera by the camera movement means. By appropriately changing the direction of line of sight, it is possible to efficiently use the display screen at any time thus allowing more information display entities to be displayed.

[**0033**] The display control device is characterized by further comprising display change means (for example a menu display controller **24** in **FIG. 5**) for displaying at least one information display entity displayed in a predetermined position in the display of the display controller as an information display entity being a candidate for selection differently from other information display entities. This allows an information display entity as a candidate for selection to be prominent with improved visibility even in case a plurality of information display entities are displayed on the display screen.

[**0034**] The display control device is characterized by changing the display position of an information display entity as the candidate for selection in accordance with the movement by the movement means. As a result, for example, as an information display entity being a candidate for selection approaches the head of a line, the information display entity is displayed on the upper area of the screen. Conversely, as the information display entity being a candidate for selection approaches the tail of the line, the information display entity is displayed on the lower area of the screen.

[**0035**] Thus, the user can visually recognize which information display entity in which part is a candidate for selection among a plurality of information display entities from the position of the information display entity as a candidate for selection on the screen.

[**0036**] The display control device is characterized by further comprising transparency setting means (for example a transparency setting section **244**) for setting the transparency of each information display entity in accordance with the distance between the virtual cameras and the information display entity. As a result, by changing the transparency of an information display entity in accordance with the distance between the information display entity and a virtual camera, further three-dimensional appearance is provided.

[0037] The display control device is characterized in that the transparency setting means reduces the transparency of an information display entity which is away from the virtual camera by a predetermined distance or more from the virtual camera.

[0038] As a result, an information display entity appears from one side of the screen and disappears into the other side using a visual effect of merging into a background image. Thus it is possible to provide a crisp display of a range close to the virtual camera and a faint display an information display entity distant from the virtual camera. This indirectly presents a range to be noticed by the user thus providing the three-dimensional appearance of the information display and the visibility of the display.

[0039] The display control device is characterized in that the transparency setting means sets the transparency of the information display entity by changing the weight amount relative to a background and the information display entity displayed on the display control device. The background is an image which is so-called wallpaper. The weight amount relative to the background and the information display entity is a value indicating the change ratio of the transparency of the information display entity in accordance with the characteristics of the background.

[0040] It is thus possible to change the weight in accordance with the characteristics of the background and the information display entity and provide appropriate transparency. For example, in case the lightness of the background is low (that is, dark) and the lightness of the information display entity is high (that is, bright), the weight amount is changed to raise the transparency in order to avoid a state where the information display entity is more prominent than the desired appearance. In case the lightness of each of the background and the information display entity is high, the weight amount is set so as to reduce the transparency thus avoiding a state where the information display entity is less prominent than the desired appearance. It is thus possible to keep proper the appearance of an information display entity by way of the background thereby enhancing the visibility.

[0041] The invention provides a display control method for a portable information terminal which displays a plurality of information display entities in a vertical line on the display section, characterized in that the display control method comprises: a size setting step of setting the size of an information display entity so that the size of the information display entity to be displayed will be gradually scaled down in accordance with the distance between the information display entity and a predetermined display position of the display; an interval setting step of setting the display interval of information display entities to be displayed in accordance with the distance between each of the information display entities and the predetermined display position; a transparency setting step of setting the transparency of an information display entity to be displayed in accordance with the distance between each of the information display entities and the predetermined display position; and a scroll step of scrolling through the plurality of information display entities based on the setting in the size setting step, the interval setting step, and the transparency setting step.

[0042] According to the invention, an information display entity is arranged so that the information display entity will appear smaller and more transparent and the interval will be smaller as it moves upward from the predetermined position.

[0043] The invention provides a portable information terminal (for example a PDA **1** in **FIG. 24**) comprising a display section (for example an LCD panel **11** in **FIG. 14**) integral with a touch panel, the portable information terminal displaying, in whole or in part, the information display entities arranged in a predetermined order in a predetermined display area (for example a main display area **11***a* in **FIG. 24**) of the display, characterized in that the portable information terminal further comprises: setting means (for example a menu display controller **310** in **FIG. 41**) for setting a position of a candidate for selection (for example a menu display area in **FIG. 25**) in the predetermined display area; scroll means (for example a scroll display controller **314** in **FIG. 41**) for scrolling through information display entities in case a drag operation is made; and first determination means (for example a menu display controller **310** in **FIG. 41**) for determining the information display entity displayed in the position of a candidate for selection as a candidate for selection; characterized in that a drag operation is available across the predetermined display area.

[0044] The invention provides a display control method for causing, a portable information terminal comprising a display integral with a touch panel, a drag operation being available across the predetermined display area of the display, to display, in whole or in part, the information display entities arranged in a predetermined arrangement in the predetermined display area, characterized in that the method comprises: a setting step of setting a position of a candidate for selection in the predetermined display area; a scroll step of scrolling through information display entities in case a drag operation is made; and a first determination step of determining as a candidate for selection the information display entity displayed in the position of a candidate for selection.

[0045] Here, display control information refers to information equivalent to a program used for processing by an electronic calculator (computer) such as a portable information terminal.

[0046] The drag operation refers to operation of drawing a line on a touch panel with a stylus pen of a finger of the user. In the drag operation, a moment a stylus pen comes into contact with a touch panel is referred to as a "tap-in" and a moment a stylus pen is released from a touch panel after moving the stylus pen with the stylus pen kept in contact with the touch panel is referred to as a "tap-out". The operation of causing a stylus pen to come into contact with a touch panel instantaneously and release the stylus pen is called a "tap". According to this invention, a drag operation is available across a predetermined display area where a plurality of information display entities are displayed. Scroll display of information display entities is executed by a drag operation. Thus, the user has only to perform a drag operation like drawing an arbitrary line in order to perform scroll operation. The display screen of a personal information terminal device is small so that the predetermined display area maybe set to the entire display screen of the display. For example, a menu display entity may be used as an information display entity and in case a menu screen is to be displayed, the entire display screen may be used to display the menu screen, and a scroll operation (or a drag operation)

is allowed across the screen. Further, as a result of scroll, an information display entity (menu display entity) displayed in the position of a candidate for selection is selected as a candidate for selection. Thus, a single drag operation serves as a scroll operation instruction and selection of an information display entity (menu display entity).

[**0047**] The invention provides a portable information terminal comprising a display integral with a touch panel, the portable information terminal displaying, in whole or in part, a virtual face (for example a menu display entity group **40**) where a plurality of information display entities are arranged in a predetermined display area of the display, characterized in that the portable information terminal further comprises: setting means (for example a menu display controller **310** in **FIG. 41**) for setting a position of a candidate for selection in the predetermined display area; scroll means (for example a scroll display controller **314** in **FIG. 41**) for scrolling through information display entities by moving at least either the virtual camera and the virtual face in case a drag operation is made; and first determination means (for example a menu display controller **310** in **FIG. 41**) for determining the information display entity displayed in the position of a candidate for selection as a candidate for selection; characterized in that a drag operation is available across the predetermined display area.

[**0048**] The invention provides a display control method for causing, a portable information terminal comprising a display integral with a touch panel, a drag operation being available across the predetermined display area of the display, to display, in whole or in part, a virtual face where a plurality of information display entities are arranged as seen from a virtual camera in the predetermined display area, characterized in that the method comprises: a setting step of setting a position of a candidate for selection in the predetermined display area; a scroll step of scrolling through information display entities by moving the virtual camera in case a drag operation is made; and a first determination step of determining the information display entity displayed in the position of a candidate for selection as a candidate for selection.

[**0049**] According to the invention, the following advantage is obtained. Information display entities are arranged on a virtual face. Scroll display is allowed by moving a virtual camera whose line of sight faces the virtual face, thus more readily allowing scroll control in a virtual space.

[**0050**] A virtual face for a portable terminal device may be a curved surface. The virtual face is a curved surface, so that the size of an information display entity displayed changes and the size changes by way of scroll also. For example, in case the virtual face is the lateral face of a cylinder and the cylinder is rotated about its axis by way of scrolling through the virtual face or a virtual camera moves along the direction of the lateral face of the cylinder, the size of an information display entity changes thus allowing display of a three-dimensional information display entity.

[**0051**] The invention provides a portable information terminal characterized by further comprising: storage means (for example a storage section **400** in **FIG. 41**) for storing a plurality of programs corresponding to, in whole or in part, the plurality of information display entities; and activation means (for example an application activation controller **320** in **FIG. 41**) for activating, if any, a program corresponding to the information display entity determined as a candidate for selection by the first determination means.

[**0052**] According to the invention, it is possible to activate a program corresponding to an information display entity determined as a candidate for selection by a drag operation. A single drag operation serves as a series of operations such as scroll display and selection and activation, thereby enhancing its operability.

[**0053**] The invention provides a portable information terminal characterized by further comprising: storage means (for example a storage section **400** in **FIG. 41**) for storing a plurality of programs corresponding to, in whole or in part, the plurality of information display entities; tap-out determination means (for example an input determination section **311** in **FIG. 41**) for determining tap-out on the touch panel; and activation means (for example an application activation controller **320** in **FIG. 41**) for automatically activating a program corresponding to the information display entity determined as a candidate for selection by the first determination means, if any, based on the tap-out determination by the tap-out determination means.

[**0054**] According to the invention, it is possible to prevent inadvertent activation of a program through a drag operation thus enhancing the operability. Making tap-out operation within a predetermined period after the completion of scroll display does not activate a program corresponding to the information display entity determined as a candidate for selection. In case tap-out operation is made past the predetermined period after the completion of scroll display, the program is activated. This prevents an unexpected program from being activated due to a drag operation for scroll display. Meanwhile, by delaying a tap-out following a drag operation (performing a tap-out past a predetermined period), it is possible to activate a desired program.

[**0055**] This allows scroll display and selection by way of a single operation thus enhancing its operability.

[**0056**] The invention provides a portable information terminal characterized by further comprising second determination means (for example a menu display controller **310** in **FIG. 18**) for determining as a candidate for selection the information display entity displayed in the tap position instead of an information display entity determined as a candidate for selection by the first determination means.

[**0057**] According to the invention, a tap operation may be used, on top of a drag operation, to select a desired information display entity. A method for selecting an information display entity may be switched as appropriate, such as using a drag operation in case a desired information display entity is not displayed in the predetermined display area, and a tap operation in case one is displayed. In any case, it is possible to readily select a desired information display entity thus enhancing its operability.

[**0058**] In case determination is made by the second determination means, the activation means may activate a program corresponding to an information display entity determined as a candidate for selection by the second determination means, if any.

[**0059**] According to the invention, a tap operation may be used to activate an application program corresponding to a

selected information display entity. That is, a single tap operation directly activates a desired application thus enhancing its operability.

[0060] The scroll means of the portable information terminal device may gradually accelerate the scroll display in case the drag velocity of the drag operation exceeds a predetermined velocity.

[0061] According to the invention, scroll velocity is gradually increased in accordance with the drag velocity of the drag operation. Thus, in case the position of a desired information display entity in the whole information display entities is estimated, the drag velocity maybe increased for quick display. This enhances its operability.

[0062] The invention provides a portable information terminal characterized by further comprising: target scroll amount setting means for setting a target scroll amount in accordance with the operation amount of the drag operation; and target scroll amount change means for changing the target scroll amount determined by the target scroll amount setting means in accordance with the operation amount of the drag operation; characterized in that the scroll means controls the scroll display velocity in accordance with the remaining scroll amount as a difference between the target scroll amount changed by the target amount change means and the current scroll amount.

[0063] According to the invention, the target scroll amount is set in accordance with the drag operation amount, that is, the travel distance of a drag. Thus, by making control so that the scroll velocity is reduced as the remaining scroll amount is reduced as a result of scroll, it is possible to obtain a smooth feel of halt. Moreover, the target scroll amount can be changed in accordance with the drag velocity. That is, it is possible to reflect the component of the drag velocity on the scroll display velocity.

[0064] The invention provides a display control device comprising: item display control means for displaying a plurality of items on an image display section; window frame display control means for displaying a plurality of window frames in accordance with the plurality of items; a first screen which can be displayed on the image display section including a first plurality of items; a second screen which can be displayed on the image display section including a second plurality of items and the plurality of window frames, the second screen located in a lower layer than the first screen; and screen display control means for selectively switching between the first screen and the second screen and displaying the first screen or the second screen on the image display section; characterized in that, in switchover from the first screen to the second screen by the screen display control means, the item display control means makes display control by gradually scaling up the second plurality of items so as to position the items in the window frames corresponding to the items.

[0065] The invention provides a display control device comprising: first operation means and second operation means, both of the means instructing selective display between the first screen and the second screen by way of the image display control means, characterized in that, in switch over from the first screen to the second screen by the operation means by way of the first screen display control means, the item display control means makes display control by gradually scaling up the second plurality of items so as to position the items in the window frames corresponding to the items, and that in switchover from the first screen to the second screen by the second operation means by way of the image display control means, the item display control means makes display control so as to promptly position the second plurality of items in the window frames corresponding to the items.

[0066] The invention provides a display control device comprising a switch section which is oscillatable or rotatable and can be pressed, characterized in that the display control device selects an arbitrary item from the plurality of items in the first screen by way of oscillation or rotation of the switch section and that, by way of a push on the switch section, the image display means makes switchover from the first screen to the second screen as a lower-layer screen related to the selected item.

[0067] The invention provides a display control program used for the display control device, the program comprising: a step of displaying a first screen including a first plurality of items on an image display section; a step of selecting an arbitrary item from the plurality of items in accordance with the oscillation or rotation of a switch section which is oscillatable or rotatable and can be pressed; a step of determining the selected item by way of a push on the switch section; a step of determining whether decision of an item is made by way of a push on the switch section within a predetermined period after selection of the item by way of oscillation or rotation of the switch section; and a step of selectively performing display control of, in switching from the first screen to the second screen as a lower-layer screen related to the selected item, the second screen including a second plurality of items and a plurality of window frames, gradually scaling up the second plurality of items in accordance with the determination in the determining step so as to position the items in the window frames corresponding to the items, or display control of promptly positioning the second plurality of items in the window frames corresponding to the items.

[0068] The invention provides a display control device which can display at least partially a plurality of items on a display section, the display control device comprising scroll display control means for scrolling the items on the display section, characterized in that the scroll display control means scales up the items in a direction opposite to the scroll direction of the scroll display among the items to be displayed on the display, and displays the scaled-up items in accordance with the scroll operation.

[0069] The invention provides a display control device which can display at least partially a plurality of items on a display section, the display control device comprising scroll display control means for displaying the plurality of items on the display section as well as scrolling the items rightward or leftward, or upward or downward on the display section in accordance with a scroll operation, characterized in that the scroll display control means scales up at least partially the items to be displayed on the display section in a different fashion between the rightward, leftward, upward and downward scroll operations, and displays the scaled-up items

[0070] The invention provides a display control device which can display at least partially a plurality of items on a

display section, the display control device comprising scroll display control means for displaying in a first size the plurality of items on the display section as well as scrolling the items on the display section in accordance with a scroll operation, characterized in that the scroll display control means gradually scales up at least partially the items to be displayed on the display section from a size smaller than the first size to the first size and displays the scaled-up items in accordance with the scroll operation.

[0071] The invention provides a display control device which can display on a display section an image of a plurality of items arranged in a virtual space, the plurality of items projected onto a predetermined plane, the display control device comprising scroll display control means for scrolling the plurality of items on the display section by moving the plurality of items in the virtual space in accordance with a scroll operation, characterized in that the scroll display control means scales up at least partially the plurality of items and displays the scaled-up items by moving the plurality of items in a position distant from the predetermined plane to a position close to the plane.

[0072] The invention provides a display control device which can display an image of a plurality of items arranged in a virtual space, the plurality of items shot with a virtual camera arranged in the virtual space, the display control device comprises scroll display control means for scrolling on the display section at least either the plurality of items or the virtual camera by moving at least either the plurality of items or the virtual camera in the virtual space, characterized in that the scroll display control means scales up at least partially the plurality of items and displays the scaled-up items by moving at least either part of the plurality of items or the virtual camera so that the distance between the plurality of items and the virtual camera will be reduced.

BRIEF DESCRIPTION OF THE DRAWINGS

[0073] **FIG. 1** shows a front view and a side view of a PDA according to a second embodiment of the invention;

[0074] **FIG. 2** shows a screen of menu display patterns in the PDA to which the invention is applied;

[0075] **FIG. 3** is a conceptual drawing of a YZ plane in a virtual space illustrating an example of a menu display alignment in the mode "1";

[0076] **FIG. 4** is a conceptual drawing of a YZ plane in a virtual space illustrating an example of a menu display alignment in the mode "2";

[0077] **FIG. 5** is a functional block diagram showing an example of functional configuration;

[0078] **FIG. 6** is a conceptual drawing illustrating the concept of character display control by way of a character drawing section;

[0079] **FIG. 7** is a conceptual drawing illustrating the transparency control by way of a transparency setting section;

[0080] **FIG. 8A** is a conceptual drawing illustrating the display position P in the menu display mode "1";

[0081] **FIG. 8B** shows an example of data structure of display position information in the menu display mode "1";

[0082] **FIG. 9A** is a data structure view showing an example of data structure of menu panel position information;

[0083] **FIG. 9B** shows data structure of data stored in menu panel position information and corresponding menu panel positions;

[0084] **FIG. 10** shows an example of data structure of menu item information;

[0085] **FIG. 11A** is a conceptual drawing illustrating the concept of movement of a virtual camera;

[0086] **FIG. 11B** shows an example of data structure of camera setting information;

[0087] **FIG. 12A** shows an example of a splash image screen on activation of an application;

[0088] **FIG. 12B** shows an example of splash image;

[0089] **FIG. 13** is a flowchart illustrating a flow of menu item selection;

[0090] **FIG. 14** is a flowchart illustrating a flow of menu moving display;

[0091] **FIG. 15** is flowchart illustrating a flow of selection/determination through activation of an application;

[0092] **FIG. 16** is a flowchart illustrating a flow of drawing on a menu panel;

[0093] **FIG. 17** shows an example of menu display in the mode "1".

[0094] **FIG. 18** shows another example of menu display in the mode "1".

[0095] **FIG. 19** shows an example of menu display in the mode "1".

[0096] **FIG. 20** shows another example of menu display in the mode

[0097] **FIG. 21** is a conceptual drawing illustrating an example where menu panels are arranged on a virtual entity;

[0098] **FIG. 22** is a conceptual drawing illustrating an example where menu panels are arranged on a virtual entity;

[0099] **FIG. 23** is a conceptual drawing illustrating an example where menu panel are arranged on a virtual entity;

[0100] **FIG. 24** is an external view of a PDA according to the second embodiment of the invention;

[0101] **FIG. 25** shows a structure of a menu screen;

[0102] **FIG. 26** shows a display example of a menu screen;

[0103] **FIG. 27** shows a display example of a menu screen;

[0104] **FIG. 28** illustrates the concept of scroll;

[0105] **FIG. 29** illustrates scroll directions and calculation of a scroll velocity v;

[0106] **FIG. 30** shows the relationship between an inter-item distance w and the scroll velocity v.

[0107] **FIG. 31** illustrates a drag input with a stylus pen;

[0108] **FIG. 32** shows the relationship between an indicated position and a drag direction or a travel distance Δw;

[0109] **FIG. 33** shows the relationship between the drag direction and the travel direction of a destination pointer;

[0110] **FIG. 34** shows the relationship between a drag travel distance Δy and the travel distance Δw of the destination pointer;

[0111] **FIG. 35** illustrates the movement of the destination pointer;

[0112] **FIG. 36** shows the relationship between the input direction of a side controller and the travel direction of the destination pointer;

[0113] **FIG. 37** illustrates the movement of the destination pointer;

[0114] **FIG. 38** illustrates the movement of the destination pointer;

[0115] **FIG. 39** illustrates the movement timing of the destination pointer;

[0116] **FIG. 40** shows an example of a menu screen;

[0117] **FIG. 41** is block diagram showing the functional configuration of the PDA;

[0118] **FIG. 42** shows the structure of menu display entity data;

[0119] **FIG. 43** shows the structure of each of scroll target data, indicated position data, scroll control data, and application activating conditions;

[0120] **FIG. 44** is a flowchart showing the operation of the PDA;

[0121] **FIG. 45** is a continuation of **FIG. 44**;

[0122] **FIG. 46** is a continuation of **FIG. 45**;

[0123] **FIG. 47** illustrates a variation of this embodiment;

[0124] **FIG. 48** illustrates another variation of this embodiment;

[0125] **FIG. 49** illustrates another variation of this embodiment;

[0126] **FIG. 50** illustrates another variation of this embodiment;

[0127] **FIG. 51** is a perspective view of an example of personal information terminal device of the invention;

[0128] **FIG. 52** is a block diagram showing an example of a control system used in a portable information terminal device shown in **FIG. 51**;

[0129] **FIG. 53A** shows an example of a launcher screen displayed on the portable information terminal device shown in **FIG. 1** in the first mode;

[0130] **FIG. 53B** shows an example of a launcher screen displayed on the portable information terminal device shown in **FIG. 1** in the first mode;

[0131] **FIG. 53C** shows an example of a launcher screen displayed on the portable information terminal device shown in **FIG. 1** in the first mode;

[0132] **FIG. 54A** shows the transition of display of menu items in an accessory operation screen as a lower-layer menu screen of the launcher screen;

[0133] **FIG. 54B** shows the transition of display of menu items in an accessory operation screen as a lower-layer menu screen of the launcher screen;

[0134] **FIG. 54C** shows the transition of display of menu items in an accessory operation screen as a lower-layer menu screen of the launcher screen;

[0135] **FIG. 54D** shows the transition of display of menu items in an accessory operation screen as a lower-layer menu screen of the launcher screen;

[0136] **FIG. 54E** shows the transition of display of menu items in an accessory operation screen as a lower-layer menu screen of the launcher screen;

[0137] **FIG. 54F** shows the transition of display of menu items in an accessory operation screen as a lower-layer menu screen of the launcher screen;

[0138] **FIG. 54G** shows the transition of display of menu items in an accessory operation screen as a lower-layer menu screen of the launcher screen;

[0139] **FIG. 55A** shows the transition of display of menu items in other display control of menu items by way of a scroll operation in the third mode shown in **FIG. 53C**.

[0140] **FIG. 55B** shows the transition of display of menu items in other display control of menu items by way of a scroll operation in the third mode shown in **FIG. 53C**.

[0141] **FIG. 55C** shows the transition of display of menu items in other display control of menu items by way of a scroll operation in the third mode shown in **FIG. 53C**.

[0142] **FIG. 55D** shows the transition of display of menu items in other display control of menu items by way of a scroll operation in the third mode shown in **FIG. 53C**.

[0143] **FIG. 55E** shows the transition of display of menu items in other display control of menu items by way of a scroll operation in the third mode shown in **FIG. 53C**.

[0144] **FIG. 55F** shows the transition of display of menu items in other display control of menu items by way of a scroll operation in the third mode shown in **FIG. 53C**.

[0145] **FIG. 55G** shows the transition of display of menu items in other display control of menu items by way of a scroll operation in the third mode shown in **FIG. 53C**.

[0146] **FIG. 55H** shows the transition of display of menu items in other display control of menu items by way of a scroll operation in the third mode shown in **FIG. 53C**.

DETAILED DESCRIPTION OF THE EMBODIMENTS

First Embodiment

[0147] A first embodiment of the invention will be described referring to **FIGS. 1 through 20**. This embodiment explains a case where this invention is applied to a PDA.

[0148] Application of the invention is not limited to this example. The invention may be applied to other electronic

devices and information terminal devices which provides menu display, such as a portable game device, a multifunctional cell phone, a laptop PC, and a set-top box.

Explanation of External Configuration

[0149] **FIG. 1** shows a front view and a side view showing an example of external appearance of a PDA to which the invention is applied.

[0150] As shown in **FIG. 1**. A PDA **100** comprises an LCD (Liquid Crystal Display) **102**, a touch panel **104**, a stylus pen **106**, a side controller **105**, an ESC (escape) button **110**, a power button **112**, a compact memory flash card slot **114**, an interface connector **116**, a stylus pen storage unit **118**, a control unit **120**, and a built-in power unit (not shown). These components are installed in an enclosure **101**.

[0151] The LCD **102** is an image display device which can display various information such as a text and an image. The LCD **102** may be another display unit such as an ELD (Electronic Luminescent Display) or DDF (Plasma Display Panel). On the top of the LCD**102** is provided the touch panel **104**, which the user can touch with the stylus pen **106** to perform various operation and input.

[0152] The side controller **108** is an input lever which tilts upward (arrow Fu) and downward (arrow Fd), and a push (arrow Fp). The user operates the side controller **108** for example with his/her fingers. When not operated, the side controller **108** returns to the state in **FIG. 1**, or no-input state by way of actuation by a spring. Thus, from the side controller **108**, the four states can be input: upward/downward direction, push and non input.

[0153] The escape button **110** is a button switch for inputting an operation meaning cancellation or escape in the operation input.

[0154] The compact memory flash card slot **114** is an extension slot conforming to the standard for a compact flash memory card using a flash memory. The interface connector **116** is an extension slot to connect to an external device such as a digital camera, a PC, a cell phone, and a cradle for input/output of information. Standards for the compact memory flash card slot **114** and the interface connector **116** may be set as appropriate.

[0155] The control unit **120** controls the functions of the PDA **100** and is implemented by way of hardware such as a CPU (Central Processing Unit), a RAM, a ROM, an ASIC (Application Specific Integrated Circuit) and software such as various programs and data. The LED **102**, touch panel **104**, side controller **108**, escape button **110**, compact memory flash card slot **114** and interface connector **116** are connected to the control unit to allow signal communications and centrally controlled.

[0156] In this embodiment, three menu selecting operations are available. The first method is input with the side controller **108**. Inputting some direction by tilting the side controller **108** in the upward/downward direction deselects the menu items in the selection state (state where an item is recognized as a candidate for selection). Then, in accordance with the number of time the lever is tilted or duration the lever is tilted, the user can specify a menu item in the upward or downward direction (upward/downward direction on the display screen). When the menu under moving display, that is, when a menu item specified with scroll is in the selection state, that selection is determined by pushing the side controller **108**.

[0157] The second method is an input with the touch panel **104** and the stylus pen **106**. In the display screen are displayed a scroll-up icon **136** and a scroll-down icon **138**. When the user touches the touch panel **106** with the stylus pen **106** with an intention to touch an icon, menu items in the selection state are deselected. Then, in accordance with the number of time the lever is tilted or duration the lever is tilted, the user can place the menu under moving display in the upward or downward direction (upward/downward direction on the display screen). The user then taps (patting on the touch panel **104** with the stylus pen **106**).

[0158] The third method is an input in accordance with a drag with the stylus pen **106**. By causing the stylus pen **106** to touch the touch panel **104** and dragging the stylus pen **106**, or sliding the stylus pen **106** with its tip in contact with the touch panel **104** in the upward/downward direction deselects the menu items currently in the selection state. The user can specify a menu item distant by the number of items according to the travel amount of the drag in the upward or downward direction according to the drag direction. Once the menu is under moving display and the specified menu item is in the selection state, the user releases the stylus pen **106** to determine the selection.

Explanation of Menu Display

[0159] Next, the screen display, specifically speaking, the menu display will be described.

[0160] **FIG. 2** shows a screen of the outline of menu display by a launcher. As shown in **FIG. 2**, the PDA **100** in this embodiment has three display states (display modes) for menu display on the background image (not shown).

[0161] **FIGS. 2A, 2B** and 2C show the mode "1" where menu items are displayed in an arc, the mode "2" where menu items are displayed in flat plates slanted in the direction of depth in the screen, and the mode "3" where menu items are arranged in a plane. Details of each mode will be given later. In the mode "1", the menu is under moving display to rotate in an arc, and in the mode "2", the menu is under moving display in the direction of depth, in accordance with the menu selection by the user.

[0162] Switching between display modes is made by selecting a mode switching icon **135**, for example in the sequence of the mode "1", mode "2", mode "3", and mode "1" back again.

[0163] In either mode, in both vertical ends of the display screen are provided a control bar B**1**, B**2** to display the mode switching icon **135** and a background switching icon **137**, and capacity display of a built-in power source as well as a clock display (not shown) The menu display is given in a main display area B**3**.

[0164] In the menu display, a single menu item or a plurality of menu items are displayed. A menu item has an icon **130** and a menu name **132** as shown in **FIG. 2D** for example, and an icon and a menu name are handled as a set, or a menu panel **134**. A menu item in a predetermined position B**4** is a candidate for selection, which shows that the menu is in the selection state by way of a different display

form of the menu panel **134** (the display form is hereinafter referred to as the "selection display"). To be more specific, the area surrounding the icon **132** and the menu name **132** corresponding to the ground of the menu panel **134**) is filled in with a color different from that of the menu panel **134** in the non-selection state. While in this embodiment, the menu panel **134** is a rectangle where the horizontal direction in the screen is the longitudinal direction, any other shape may be used. The menu panel **134** may display only the icon **130** or the menu name **132**.

[**0165**] **FIG. 3** is a conceptual drawing showing a YZ plane in a virtual space illustrating an example of menu display topology in the mode "1". **FIG. 4** is a conceptual drawing showing a YZ plane in a virtual space illustrating an example of menu display topology in the mode "2".

[**0166**] In the world coordinate in a virtual space, the horizontal direction in the screen (as seen from the virtual camera C) is assumed for example as the X axis, the upward/downward direction the Y axis, and the depth direction the Z axis.

[**0167**] As shown in **FIGS. 3 and 4**, in the mode "1" and mode "2", the menu panel **134** arranged on predetermined travel locuss Lf**1**-LF**3**, Lf**4** in a virtual space is generated as an image in a screen V as seen from a virtual camera C. The travel locus Lf is a model defined in a virtual space and defined for example as a polygon model or a curve function.

[**0168**] As shown in **FIG. 3**, the menu panel **134** in the mode "1" has locuss comprising the travel locus Lf**1** appearing in convex arc on the side of the virtual camera c in the upper left and lower left quadrants, the travel locus Lf**2** in milder arc than the travel locus Lf**1** extending in the direction of depth from the upper end of the travel locus Lf**1** in the upper right quadrant, and travel locus Lf**3** in milder arc than the travel locus Lf**1** extending in the direction of depth in the screen from the lower end of the travel locus Lf**1** in the lower right quadrant.

[**0169**] The menu panels **134** are arranged so that the normal to each of the travel locuss Lf**1** through Lf**3** will face the virtual camera C assuming as a local origin the display position P previously set on the travel locuss Lf**1** through Lf**3**.

[**0170**] In the mode "1", when a menu item is selected, the menu panel **134** moves to occupy the display positions P at a predetermined pitch along the travel locuss Lf**1** through Lf**3** in the upward/downward direction in the screen (direction of rotation about X axis in the figure). That is, the menu panel **134** moves to slide along the travel locuss LfE through Lf**3**. The display panel **134** located in a display position P**0** (also called the "home position") is assumed as a candidate for selection and displayed for selection. The display position P**0** corresponds to the predetermined position B**4** (see **FIG. 2A**). Thus, the menu panel **134** appears to rotate in arc on the display screen. The menu panel **134** closest to the virtual camera C is assumed as a candidate for selection and displayed for selection.

[**0171**] In the mode "1", the position of the virtual camera C is also changed. The virtual camera C moves along a predetermined virtual camera travel locus Lfc in the upper left quadrant and lower left quadrant in association with the movement of the menu display. In this practice, in case the menu panel **134** located in the display position P**0** is at the head of the menu (having the smallest menu number in this embodiment), control is made for a virtual camera C**1** to take a posture (for example the rotation angle with respect to the local origin) so that the home position (display position P**0**) will be located above the screen V**1** as seen from the position of the virtual camera C**1**, and the viewing angle will be δ1. In case the menu panel **134** located in the display position P**0** is at the tail of the menu (having the largest menu number in this embodiment), control is made for a virtual camera C**3** to take a posture (for example the rotation angle with respect to the local origin) so that the home position (display position P**0**) will be located below the screen V**3** as seen from the position of the virtual camera C**3**, and the viewing angle will be δ3.

[**0172**] The locuss formed by the travel locuss Lf**1** through Lf**3** are not limited to those shown in **FIG. 3** but may be other shapes having a convex shape such as a circle and an ellipse as faced with the virtual camera C.

[**0173**] In the mode "2", when a menu item is selected, the menu panel **134** moves to occupy the display positions P at a predetermined pitch, and is displayed as if it moved away or closer in one-point perspective. In the mode "2", the home position is fixed in the lower area of the screen and the menu panel **134** located in a home position is in the selection state. Movement between menu items is executed until the menu item specified based on the selection by the user reaches the home position, same as the mode "1".

[**0174**] For the mode "3", operation is the same as the related art so that the description is omitted.

[**0175**] In case the selected menu item is a folder, the menu items contained in the folder, or in the lower layer of the folder may be displayed on a menu.

[**0176**] On a PDA **100**, the background switching icon **137** is displayed in any display mode. By selecting the icon, it is possible to change the background screen.

Description of Functional Blocks

[**0177**] Next, the functional blocks will be described.

[**0178**] **FIG. 5** is a functional block diagram showing an example of functional configuration in this embodiment. As shown in **FIG. 5**, the PDA **100** comprises an operation input section **10**, a processor **20**, a display section **30**, a communications section **40**, and a storage section **50**.

[**0179**] The operation input section **10** is implemented for example by a button, a lever, a mouse, a track pad, or a keyboard (including a soft keyboard), and accept various operation inputs from the user and outputs an operation input signal to the processor **20**. In the example of **FIG. 1**, the operation input section **10** comprises a touch panel **104**, a side controller **108** and an escape button **110**.

[**0180**] The processor **20** performs arithmetic operation in accordance with programs to make centralized control of the PDA **100** as well as execute a launcher or various application programs for the PDA **100**.

[**0181**] The processor **20** is, for example, hardware such as a CPU, various IC memories, an ASIC, and a driver circuit and their control programs. In the example of **FIG. 1**, the processor **20** comprises a control unit **120**, and a driver circuit of an LCD **102** or a touch panel **104** (not shown).

[0182] The processor **20** comprises a menu item selector **22**, a menu display controller **24**, an image generator **26** for generating image data of the display screen and displays the data on the screen, and a communications controller **28** for establishing a connection with an external information storage medium and controlling data communications.

[0183] The menu item selector **22** specifies a menu item from a plurality of menu items based on an operation input signal from the operation input section **10**. The specified menu item is stored into the storage section **50** as a specified menu item **531** (detailed below).

[0184] To be more specific, for example, in case the selecting operation is a short titling (click) of the side controller **180** in the upward/downward direction or tapping on the scroll-up icon **136** or down-scroll icon **138**, a menu item positioned in the upward/downward direction the number of operations away from the menu item currently selected is specified.

[0185] In case the selecting operation is a hold-down input by continuous titling of the side controller **180** in the upward or downward direction or a drag operation of the stylus pen **106**, a menu item positioned in the upward/downward direction away from the menu item currently selected is specified, in accordance with the direction and duration of hold-down input or the drag direction and travel amount of the stylus pen **106**.

[0186] Thus, the specified menu item is not necessarily a menu item next to the menu item currently in the selection state. Assuming the number of the menu item in the selection state is Mn, the number of the specified menu item is $Mn+\alpha$ ($a \geqq 1$ or $a \leqq -1$).

[0187] The menu display controller **24** controls a virtual space to control menu display. The menu display controller **24** further comprises a display position setting section **240**, a menu arrangement section **241**, a display form setting section **242**, a camera setting section **245**, and an application activation display controller **246**.

[0188] The display position setting section **240** sets as a virtual entity a travel locus Lf in the virtual space and sets a display position P.

[0189] The menu arrangement section **241** determines position coordinates where menu panels **134** are arranged on the travel locus Lf. To be more specific, for example, the menu arrangement section **241** divides the distance between display positions P into a plurality of equal pitches and determines the position coordinates of the local origin in units of pitches until the menu item specified by the menu item selector **22** reaches the home position (display position P). The menu arrangement section **241** determines the vertex coordinates of the menu panel **134** so that the normal to the menu panel **134** will face the virtual camera C.

[0190] The display form setting section **242** determines a specific display form in order to draw a menu item on the menu panel **134**. As mentioned earlier, the menu panel **134** is drawn as an information display entity model. Thus the size of the menu panel **134** shrinks as it moves in the direction of depth in the screen.

[0191] The display form setting section **242** thus comprises a character display drawing section **243** which changes the size of character display of the menu name **132** and a transparency setting section **244** for controlling the transparency of the menu panel **134** (including the icon **130** and the menu name **132**).

[0192] **FIG. 6** illustrates the concept of character control by way of the character display drawing section **243**. A rectangle in the figure represents pixels on the LCD **102**.

[0193] The **111243** reads the character font corresponding to the menu name **132** on the menu panel **134**, scales up/down the character font based on the distance between the menu panel **134** and the virtual camera C, and obtains pixels R1 of the character to be displayed.

[0194] In case the character is scaled down, in case the pixels R1 are displayed as they are, the lines forming the character may adjoin other lines of the same color without gap, or overlap on these lines to produce a so-called "character batter", or a contrast against the background image may be lost. The character display drawing section **243** then borders the pixels R2 next to the pixels R1 on the right side, the pixels R2 off to the lower right of the pixels R1, and the pixels R2 below the pixels R1 with a darker color than the color of the character (for example gray in case the character appears in white). Further, the character display drawing section **243** borders their perimeter with the pixels R3 in a darker color (for example black). This reduces the prominent jaggies of a scaled-up character and the batter of a scaled-down character (hereinafter referred to as "bordering").

[0195] **FIG. 7** illustrates the concept of transparency control by way of the transparency setting section **244**.

[0196] As shown in the figure, the transparency setting section **244** sets the transparency of the menu panel **134** based on the distance between the menu panel **134** and the virtual camera C. To be more specific, by assuming the transparency at the home position (display position P0) is "0(=opaque)" and increasing the transparency with an increase in the distance, the menu display appears more three-dimensional. As a result, the menu panel **134** is gradually displayed fainter in the direction of depth in the screen. The menu panel **134** arranged in a farther position than a certain point in the screen becomes invisible.

[0197] The camera setting section **245** sets the position, posture and the viewing angle of the virtual camera C in the virtual space.

[0198] The application activation display controller **246** displays a predetermined image (hereinafter referred to as a "splash image") during a period from reading of an application program to execution of the program in activation of the application program for stage effects of the screen at activation.

[0199] The image generator **26** is for example hardware such as a CPU, a DSP (Digital Signal Processor) and an IC memory, or image processing software. The image generator **26** generates image data to be displayed on the LCD **102** based on the display position information or an instruction from the menu display controller **24**.

[0200] The image generator **26** comprises a transient processor **261**. The transient processor **261** executes for example scaling, rotation, overlapping, and wiping of an image in switching between two separate images displayed on the screen. In this embodiment, overlap processing is executed.

[0201] The communications controller **28** makes synchronized control of data read/write from/to and data communications with an external information storage medium and protocol control to establish a connection and perform data communications.

[0202] The display section **30** displays an image in accordance with an image signal output from the image generator **26**. In the example of **FIG. 1**, the display section **30** is the LCD **102**.

[0203] The communications section **40** performs data communications with an external information storage medium and an external device in accordance with the control by the communications controller **28**. The communications section **40** is for example a slot of various types, a modem, or a TA. In the example of **FIG. 1**, The communications section **40** comprises the compact memory flash card slot **14** and the extension slot of the interface connector **116**.

[0204] The storage section **50** stores programs and data. The storage section **50** comprises a variety of information storage media such as an IC memory, a hard disk, an MO, and a CD-ROM.

[0205] In the example of **FIG. 1**, the storage section **50** comprises an information storage medium built into the control unit **120**, an information storage medium connected to the compact memory flash card slot **114**, and an information storage medium connected via the interface connector **116**.

[0206] In this embodiment, as programs, an OS (Operating System) or various driver programs and an image processing program used by the image processor (not shown) as well as a control program **502** and an application program **510** are stored.

[0207] The control program **502** executes a so-caller "launcher" to work as utility software to help activate the application program **510**. The control program **502** comprises processing concerning menu display shown in **FIG. 2** and includes a menu item selector **22** and a menu display controller **24** in a processor **20**.

[0208] The storage section **50** stores, as data, menu screen information **520**, display mode information **521**, display position information **522**, menu panel position information **523**, menu item information **524**, camera setting information **530**, a selected menu number **531**, a specified menu number **532**, a character font **534**, splash image data **536**, animation pattern data **540**, and background image data **542**.

[0209] The menu screen information **520** stores various ii required for screen display of a launcher shown in **FIG. 2**, for example image information on various icons and their display position coordinates. The menu screen information **520** is set per menu display mode. Which mode of menu display is to be used is stored as the display mode **521**.

[0210] The display position information **522** stores information necessary for the display position setting section **240** to obtain the display position P per display mode.

[0211] **FIG. 8A** is a conceptual drawing illustrating the display position P in the menu display mode "1". **FIG. 8B** shows an example of data structure of the display position information **522**. A screen displayed on an LCD **102** is generated as an image in a screen V of the menu panel **134** arranged on a predetermined travel locus in a virtual space, the image shot with the virtual camera C. The display position information **522** stores, in this embodiment, a display mode **522***a,* a travel locus function **522***b* of the travel locuss Lf**1** through Lf**3**, a travel locus function **522***c* applied per display position P, and an upward/downward direction angle **522***d* (angle θx with respect to the X axis in the figure). The upward/downward direction angle **522***d* in the mode "1" is appropriately set so that the menu panels **134** will be arranged without overlapping each other in proximity of the home position and that the display panel arranged farther in the screen will appear as close as possible for better visibility. The angle formed by a line connecting a display position Pn (n being an integer) and the virtual camera C and a line connecting a display position Pn−1 or Pn+1 and the virtual camera becomes larger as the menu panel **134** moves from the home position toward the innermost area of the screen.

[0212] The menu panel position information **523** stores specific position coordinates of the menu panel **134** set by the menu arrangement section **241**.

[0213] **FIG. 9A** shoes an example of data structure of the menu panel position information **523**. **FIG. 9B** shows the data and corresponding menu panel positions. As shown in **FIG. 9**A, the menu panel position information **523** stores a local origin position **523***a* of the menu panel **134** and specific coordinate values **523***b* off to the upper left of the menu panel **134** and coordinate values **523***c* off to the lower right of the menu panel **134**. In case which menu panel **134** is tapped on with the stylus pen **106** is determined, the menu panel position information **523** is referenced.

[0214] The menu item information **524** stores setting of the contents to be displayed on each menu panel **134**.

[0215] **FIG. 10** shows an example of the menu item information **524**. As shown in **FIG. 10**, the menu item information **524** stores, per menu item number **524***a,* the icon **524***b* of the icon **130**, the menu name **524***c* of the menu name **132**, and the attribute **524***d* of the menu item (for example distinction between an application, a folder and a file)

[0216] The menu item information **524** is provided per layer and associated with the menu item information **524** in the upper layers and lower layers. In case the attribute of the menu item is a folder, items contained in the folder can be further displayed in a menu.

[0217] The selected menu number **531** stores the menu number of a menu item currently in the selection state. The specified menu number **532** stores the menu items determined by the menu item selector **22** in accordance with the hold-down input from the side controller **108** or the drag direction and travel amount of the stylus pen **106**. The menu display moves at a predetermined velocity to assure visibility, until the selected menu number **531** matches the specified menu number **532**.

[0218] **FIG. 11A** illustrates the concept of movement of the virtual camera C. **FIG. 11B** shows an example of the data structure of the camera setting information **530**.

[0219] As shown in **FIG. 11**A, the virtual camera C changes its view point while traveling along a predetermined virtual camera travel locus Lfc as the menu display moves.

The camera setting information **530** sets the travel range of the virtual cameras C1 through C3 by setting a virtual camera travel locus function **530***a* of the virtual camera travel locus Lfc, a menu item number **530***b* as an initial value, position coordinates **530***c*, a rotation angle **530***d* indicating the posture of the virtual camera C, and a viewing angle **530***e*. Thus, menu items other than the first one and the last one are used by calculating the position coordinates, rotation angle, and viewing angle of the virtual camera Cn (n being an integer) by way of, for example, proportional calculation of the total number of the menu items in the menu item information **524** and the selected menu number **531**. In case the middle area of the menu items is selected, the virtual camera is in the position of the virtual camera C2 facing the Z axis of the world coordinate Z.

[**0220**] **FIGS. 12A and 12B** show an example of splash image. **FIG. 12A** shows an example of application activation screen while **FIG. 12B** shows an example of splash image.

[**0221**] The splash image data **536** is an image (**FIG. 12B**) processed so that the application activation screen **535** shown in **FIG. 12A** will be rapidly zoomed closer on the screen (rapidly scaled up). The splash image which appears from when a menu item is selected and determined by a launcher to when an application program corresponding to the menu item is activated, produces a three-dimensional screen effect whereby the menu item appears as if it popped up from the menu.

[**0222**] The splash image data **536** is stored in association with the application program **510**.

[**0223**] The animation pattern data **540** stores information on an animation pattern to be displayed in case an application is terminated or menu display is arbitrarily called using a launcher. The animation pattern data **540** has a meaning which is paired with that of the splash image data **536** from the viewpoint of screen stage effects.

[**0224**] In this embodiment, for example, the animation pattern data **540** stores the information on the change in the viewing angle δ from zooming in on the icon **130** of the application to rapid zoom-out to a predetermined menu display (the state in **FIG. 2**).

[**0225**] The background image data **542** stores a plurality pieces of image data which can be displayed in the background of menu display. A flag for identification is set to the image data currently selected as background information.

Description of Processing Flow

[**0226**] Next, the processing flow in this embodiment will be described. In this example, assuming that a launcher has been activated, the flow starting with menu display of a registered application and ending with selection of a menu item followed by activation of the application will be described.

[**0227**] **FIGS. 13 through 15** are flowcharts illustrating the flow of processing from selection of an item to activation of an application in this embodiment.

[**0228**] **FIG. 13** is a flowchart specifically illustrating the flow of selection of a menu item. As shown in **FIG. 13**, in case operation is input from the side controller **108** or touch panel **104** YES in step S**102**), a menu item selector **22** executes selection of a menu item and determines a specified menu number **532**.

[**0229**] To be more specific, in the case of an input from the side controller **108**, or scroll-up icon **136** or scroll-down icon **138** (YES in step S**104**), the menu item selector **22** changes the specified menu number **532** in accordance with the input duration (step S**110**). Except for a hold-down input (NO in step S**106**), the menu item selector **22** increments the specified menu number **532** by "1" in the input direction in accordance with the specification (step S**108**).

[**0230**] In the case of a drag operation using the stylus pen **106** (YES in step S**112**), the menu item selector **22** calculates the travel direction and the travel amount of the drag (step S**114**) and changes the specified menu number **532** in accordance with the travel direction and the travel amount (step S**116**).

[**0231**] In case the stylus pen is released from the touch panel **104**, a so-called tap-out operation is made (YES in step S**118**), execution proceeds to activation of an application described later.

[**0232**] In case a tap input is made with the stylus pen **106** (YES in step S**120**), the menu item selector **22** determines whether any menu panel **134** includes the position coordinates which are tapped on referring to the menu panel position information **523**. In case any menu panel **134** is tapped on (YES in step S**122**), the menu item selector **22** changes the selected menu number **531** to the menu number of the menu panel **134** (step S**124**). Execution then proceeds to activation of an application described later.

[**0233**] Selection of a menu item is executed in this way by following the steps S**104** through S**124**.

[**0234**] In case the specified menu number **532** has been changed, the processor **20** performs moving display of the menu, or scrolls through the menu.

[**0235**] **FIG. 14** is a flowchart specifically illustrating the flow of moving display of the item. As shown in **FIG. 14, a** menu display controller **24** turns off the selection display on the menu panel **134** currently in the selection state (step S**132**). The menu display controller **24** then references the display position information **522** in accordance with display mode information **521** (step S**134**) to execute drawing processing on the menu panel **134** (step S**136**).

[**0236**] **FIG. 16** is a flowchart illustrating the flow of drawing processing on the menu panel **134**. As shown in **FIG. 14**, the display position setting section **240** determines the direction (upward or downward) in which the menu display is to be moved from the specified menu number **532** and the selected menu number **531** (step S**202**).

[**0237**] Next, the menu display controller **24** moves the position of the local origin of the menu panel **134** up to the next display position P in the travel direction determined along the travel locuss Lf**1** through Lf**3** (step S**204**). To be more specific, for example, the menu display controller **24** divides the angle θx of the current display position P and the rotation angle θx of the next display position P into equal portions by a predetermined number of pitches and moves the position of the local origin. The menu display controller **24** then updates the menu panel position information **523** so that the normal to the menu panel **134** will face the virtual

camera C (step S**206**). By following the steps S**302** through S**206**, arrangement of menu panels **134** in a virtual space is determined.

[**0238**] Then, the camera setting section **245** sets the arrangement of the virtual camera C in the virtual space (step S**208**). To be more specific, for example, the camera setting section **245** determines the position of the menu panel **134** assumed when the menu panel **134** having the specified menu number **532** is located in the home position. Then, the camera setting section **245** makes a division by the total number of pitches obtained by multiplying the difference between the specified menu number **532** and the selected menu number **531** by the number of pitches, and moves the virtual camera C in units of pitches, same as the movement of the menu panel **134**. Similarly, the camera setting section **245** sets the rotation angle θx and the viewing angle δ.

[**0239**] When the position of each menu panel **134** and the position of the virtual camera C have been set, the display form setting section **242** sets the display contents of the menu panel **134**. That is, the character drawing section **243** executes scaling of a character to be displayed and the border processing on the character described referring to **FIG. 6** based on the distance between the menu panel **134** and the virtual C to set character display (step S**210**). The display form setting section **242** also sets the size of the icon **130** (step S**212**). The transparency setting section **344** sets the transparency of the menu panel **134** based on the distance between the menu panel **134** and the virtual camera C, as described referring to **FIG. 7** (step S**214**).

[**0240**] By following the steps S**210** through S**214**, the display contents of the menu panel **134** are set.

[**0241**] The menu display controller **24** executes the steps S**202** through S**214** for all menu panels **134** (step S**214**).

[**0242**] When the position coordinates of all menu panels **134** and the virtual camera C and display contents of all menu panels **134** have been set, the image generator **26** generates image data to display the menu screen (step S**218**). Execution then returns to the flow of **FIG. 14**.

[**0243**] In **FIG. 14**, menu drawing processing is executed until any of the menu panels **134** is located in the home position (display position P**0**) (NO in step S**138**). In case any of the menu panels **134** is located in the home position (YES in step S**138**), the selected menu number **531** is changed to the menu number of the menu panel **134** (step S**140**), and the selection display appears (step S**142**).

[**0244**] **FIG. 15** is a flowchart specifically illustrating the flow of processing from determination of a selected item to activation of an application program and the flow of screen switchover.

[**0245**] As shown in **FIG. 15**, in case determination of a selected item is input by way of a push on the side controller **108** or a tap using the stylus pen **106** (YES in step S**150**), the processor **20** references the menu item information **524** in accordance with the selected menu number **531** (step S**152**) to retrieve the corresponding splash image data **536** and displays the data on the screen (step S**154**). After that, the processor **20** loads and activates the application (step S**156**).

[**0246**] In case the application is terminated or a launcher screen is displayed (YES in step S**158**), the menu display controller **24** references the animation pattern data **540** (step S**160**) to provide zoom-back display of the menu screen (step S**162**).

[**0247**] In case the background switching icon **137** is selected (YES in step S**170**), the processor **20** turns off the menu display (step S**172**) and displays the current background image on the screen (step S**174**).

[**0248**] Selection of next background image, for example an input in the upward/downward direction by way of the side controller **108** is made (NO in step S**176** then YES in step S**178**), the processor **20** reads the next background image from the background image data **542** (step S**180**), then switches over the display image by overlaying the next background image on the current background image in the transient processor **261** (step S**182**).

[**0249**] In case a return operation is input (for example the escape button **100** is pressed) (YES in step S**176**), the processor **20** determines the displayed image as a background image.

[**0250**] The processor **20** executes the above processing until the power button **112** is pressed (NO in step S**190**). When the power button is pressed, the processor **20** executes the shutdown operation and terminates the processing (step S**192**).

[**0251**] While the desired menu panel **134** is selected on the screen and the selected menu panel **134** is determined then an application is activated in this example, the application may be automatically activated when the desired menu panel **134** has moved to the display position P**0** and selected on the screen. To be more specific, a step of comparing the specified menu number **532** with the selected menu number **531** is added before step S**142** in **FIG. 14**. In case the specified menu number **532** is the same as the selected menu number **531**, a step of checking the attribute of a registered menu item by referencing the menu item information **524** and a step of proceeding to step S**152** (**FIG. 15**) in case the attribute is an applications are executed.

[**0252**] By following the above steps, menu display and selection processing which is third-dimensional unlike the related art can be provided.

[**0253**] **FIGS. 17 and 18** show screens of examples of menu display in the mode "1".

[**0254**] In **FIG. 17A, a** menu item in the middle of the menu is in the selection state. Menu items preceding and following the item are three-dimensionally represented in arc both in the upward and downward directions in the screen. Dragging with the stylus pen **106** in the upward direction to rotate the menu display arc clockwise causes the menu panel **134** to appear while rotating clockwise along the arc, for example, as shown in **FIG. 17B**. In **FIG. 17**B, the last menu item is in the selection state. Menu items preceding this menu item are represented in arc in the upward direction in the screen.

[**0255**] Referring to **FIG. 17**, selection display is given at the bottom of the screen thus allowing efficient use of the entire screen. Unlike **FIG. 17**A, menu items are not displayed in arc in the downward direction in the screen so that the user can visually recognize that the last menu item is selected.

[0256] Similarly, in **FIG. 18A, a** menu item in the middle of the menu is in the selection state. Dragging with the stylus pen **106** in the downward direction provides a display screen like one in **FIG. 18B**.

[0257] **FIG. 19** and **FIG. 20** show screens of examples of menu display in the mode "2".

[0258] In **FIG. 19A, a** menu item in the middle of the menu is in the selection state. Menu items preceding and following the item are three-dimensionally represented in one-point perspective in the upward direction in the screen. Dragging with the stylus pen **106** in the upward direction so as to slide the menu display in the upward direction causes the menu panel **134** to move in the upward direction along the one-point perspective, for example, as shown in **FIG. 19B**.

[0259] Similarly, In **FIG. 20A, a** menu item in the middle of the menu is in the selection state. Dragging with the stylus pen **106** in the downward direction provides such a display screen as shown in **FIG. 20B**. Unlike **FIG. 20**A, the menu panel **134** is not displayed in the upper area of the menu panel **134**. The user takes only a little time to visually recognize which menu item is in the selection state.

[0260] While an embodiment of the invention has been described hereinabove, the invention may be applied to other embodiments. Components may be added or changed as appropriate without departing from the spirit of the invention.

[0261] For example, menu items include a folder and a document as well as an application software program.

[0262] For example, concerning the display position of the menu panel **134**, the user may set the home position. To be more specific, for example, the user may, as appropriate, the value of the display position **P0** in the display position information **522** or initial setting of the camera setting information **530**.

[0263] While the display position P is predetermined in the example, the position coordinates of the menu panels **134** may be corrected so that the menu panels **134** will not overlap each other in proximity of the virtual camera C before drawing on the display screen, after the menu panels **134** have been arranged equidistantly. To be more specific, for example, a step of determining, by way of the display position setting section **240**, the overlapping of the menu panels **134** in the screen V for an appropriate number of display positions P adjacent to the display position **P0**, after the position coordinates of the destination of the menu panel **134** is calculated (step S**204** in **FIG. 16**) and the arrangement of the virtual camera is determined (step S**208** in **FIG. 16**). In case overlapping is found, the menu display controller **24** changes, as appropriate, the position coordinates of the menu panels **134**.

[0264] Movement of the menu panel **134** is not limited to a method for moving a plurality of menu panels **134** separately. For example, a transparent virtual entity is set by the menu display controller **24** and the menu panels **134** are arranged on the virtual entity to set a parent-child relationship. By moving the virtual entity, the plurality of menu panels **134** are moved at a time.

[0265] **FIGS. 21 through 23** are conceptual drawings illustrating examples of arrangement of menu panels **134** on a virtual entity. For example, in **FIG. 21, a** virtual entity **160***a* has a shape of a flat plate and the menu panels **134** are arranged in the travel direction (the arrow in the figure) of the virtual entity **160***a,* thus providing a menu display similar to the mode "2".

[0266] In **FIG. 22, a** virtual entity **160***b* is a body of rotation and the menu panels **134** are arranged on the rotational face or lateral face of the virtual entity **160***b* in the direction of rotation of the virtual entity **160***b*. This provides a menu display similar to the mode "1".

[0267] In **FIG. 23, a** virtual entity **160***c* has a shape of a sheet and is arranged on a virtual base entity **162** which is another virtual entity. The virtual entity **160***c* is sequentially deformed in accordance with the shape of the virtual base entity **162** and the menu panels **134** are arranged in arranged in the travel direction (the arrow in the figure) on the virtual entity **160***c*. Moving the virtual entity **160***c* along the surface of the virtual base entity **162** in a sliding way provides a menu display similar to the mode "1".

[0268] While the menu display arrangement is made in a column in this example, the menu display arrangement may be made in a plurality of columns as well. For example, a sphere may be set in a virtual space and a menu display in a plurality of lines may be provided along the sphere. In this case, for example, a left-scroll icon and a right-scroll icon are newly provided on the display screen to rotate the menu display lines counterclockwise or clockwise, as well as the scroll-up icon **136** and the down-scroll icon **138**. Further, dragging the stylus pen **106** rightward or leftward causes the lines of menu display arrangement to be rotated clockwise or counterclockwise, same as the scroll operation through a drag with the stylus pen **106** rightward or leftward. A menu item is selected wile the lines of menu display are slid upward or downward, or rightward or leftward along the sphere.

[0269] Setting of transparency is not limited to setting in accordance with the distance between the menu panel **134** to the virtual camera C but may be made in accordance with, for example, the difference in the lightness of a background image.

[0270] To be more specific, for example, after the transparency setting section **224** has set the transparency in accordance with the distance between the menu panel **134** to the virtual camera C, an weight amount for correcting the transparency is set to correct the transparency based on the lightness of the background image and the menu item displayed on the menu panel **134** (for example the lightness of the icon **130** and the menu name **132**). For example, in case the lightness of the background is low (that is, dark) and the lightness of the information display entity is high (that is, bright), the weight amount is set to raise the transparency. In case the lightness of each of the background and the information display entity is high, the weight amount is set so as to reduce the transparency. This avoids a state where the menu panel **134** is more prominent than the desired appearance against the background or a case where the menu panel **134** is less visible against the background.

[0271] According to the invention, an information display entity is three-dimensionally arranged in a virtual space and the information display entity always faces a virtual camera. This efficiently displays more information display entities on

the display screen. It is possible to provide easy-to-see information displayed on the information display entity at any time, thus allowing easy identification of an information display entity even in a relatively small screen.

Second Embodiment

[0272] A second embodiment of the invention will be described referring to drawings.

[0273] The following descriptions assumes a portable information terminal (hereinafter referred to as the PDA) as an example, although the invention may be applied elsewhere.

[0274] **FIG. 24** is an external view of a PDA1 of this embodiment. **FIG. 24A** shows the side view and **FIG. 24B** shows the front view, respectively.

[0275] According to **FIG. 24**, the PDA1 comprises an enclosure **10** in the shape of an approximate rectangular parallelepiped and a stylus pen **20**.

[0276] The enclosure **10** is equipped with an LCD panel **11**, a CompactFlash® card slot **12**, an interface connector **13**, a side controller **14**, an escape key **15**, and a power key **16**. In the enclosure **10** is provided a stylus pen storage unit **17**. These components except the stylus pen storage unit **17** are connected to a control unit **18** housed in the enclosure **10** and controlled by the control unit **18**.

[0277] The LCD panel **11** comprises an LCD display panel integral with a transparent touch panel overlaid on the LCD display panel. The LCD panel **11** provides a display screen such as a menu screen **30** described later on the LCD display panel in accordance with a display control signal from the control unit **18**. The LCD panel **11** also detects the position on the transparent touch panel indicated (pressed) by the stylus pen **20**, and outputs as an operation signal the detected position signal to the control unit **18**.

[0278] The display screen which appears on the LCD panel **11** comprises a main display area **11***a* for selectively displaying various screens such as a main screen and a sub display screen **11***b* for displaying switching indication icons for various screens displayed in the main display area **11***a*.

[0279] The Compact Flash® card slot **12** is a connector for inserting an external information storage medium such as a memory card and performing read/write of data from/to the external information storage medium inserted.

[0280] The interface connector **13** is an interface for performing data communications with an external device by way of a wireless/wired system.

[0281] The side controller **14** is a switch for the user to input various instructions. In case an "upward" operation indicated by an arrow **14***a*, a "downward" operation indicated by an arrow **14***b*, or a "push" operation toward the inside of the enclosure **10** is made, the side controller **14** outputs an operation signal corresponding to the operation to the control unit **18**.

[0282] The escape key **15** is a switch for the user to input various instructions. In case a "push" operation toward the inside of the enclosure **10** is made, the side controller **14** outputs an operation signal corresponding to the operation to the control unit **18**.

[0283] The power key is used to input an instruction to turn ON/OFF the power of the PDA1. In case the power key **16** is slid upward along the lateral face of the enclosure **10**, the side controller **14** outputs an operation signal corresponding to the operation to the control unit **18**.

[0284] **FIG. 25** shows a configuration of a menu screen **30** displayed in the main display area **11***a* of the LCD panel **11**.

[0285] According to **FIG. 25**, the menu screen **30** comprises five menu display areas **31***a* through **31***e* (hereinafter comprehensively referred to as the "menu display area 31").

[0286] The menu display area **31** displays a menu display entity as an information display entity. For example, each menu display area **31***a* through **31***e* displays a menu display entity as shown in **FIG. 25**.

[0287] The "menu display entity" comprises an icon specifying an application and a menu name. In the following description, the menu name of each menu display entity is used to identify the menu entity.

[0288] A menu display area **31***c* is also used as a "selection candidate display area 32". In the selection candidate display area **32**, a focus **33** (cross-hatching) is shown. The menu display entity displayed in the area is a "candidate for selection".

[0289] **FIGS. 26A through 26C** show examples of the menu screen **30**.

[0290] In **FIG. 26**A, the menu display area **31***a* displays "Application B", the menu display area **31***b* displays "Application C", the menu display area **31***c* displays "Application D", the menu display area **31***d* displays "Application E", and the menu display area **31***e* displays "Application F", respectively.

[0291] In the selection candidate display area **32**, that is, in the menu display area **31***c*, the focus **33** is overlaid on Application D. The Application D is a candidate for selection.

[0292] In the menu screen **30**, dragging the stylus pen **20** in the upward direction scrolls through the menu display entities in the menu screen **30** as shown in **FIG. 26B**.

[0293] In **FIG. 26**B, the menu display area **31***a* displays "Application D", the menu display area **31***b* displays "Application E", the menu display area **31***c* displays "Application F", the menu display area **31***d* displays "Application G", and the menu display area **31***e* displays "Application H", respectively.

[0294] The menu display entities on the screen are scrolled though in the upward direction by two rows.

[0295] On the menu display entity displayed in the selection candidate display area **32**, that is, on Application F, is overlaid the focus **33**. The Application F is a candidate for selection.

[0296] Dragging with the stylus pen **20** refers to an operation (including standstill state) of sliding the stylus pen **20** on the LCD panel **11** with the tip of the stylus pen **20** in contact with the LCD panel **11**.

[0297] In **FIG. 26**B, further dragging in the upward direction further scrolls through the menu entities on the screen in the upward direction. As shown in **FIG. 26**C, when the

lowermost menu display entity (Application K in the figure) reaches the selection candidate display area **32**, the scroll comes to a halt.

[**0298**] In **FIG. 26**C, the menu display area **31***a* displays "Application I", the menu display area **31***b* displays "Application J", and the menu display area **31***c* displays "Application K", respectively.

[**0299**] On the menu display entity displayed in the selection candidate display area **32**, that is, on Application K, is overlaid the focus **33**. The Application K is a candidate for selection.

[**0300**] While a drag is made in the upward direction in **FIGS. 26A through 26C**, the same applies to a drag in the downward direction.

[**0301**] That is, as shown in **FIG. 27**A, dragging in the downward direction scrolls through the menu display entities in the downward direction. As shown in **FIG. 27**B, when the uppermost menu display entity (Application A in the figure) reaches the selection candidate display area **32**, that is, the menu display area **31***c*, the scroll comes to a halt.

[**0302**] While the drag operation is made in the rightmost area of the menu screen **30** for clarity in **FIGS. 26A through 26C** and **FIGS. 27A and 27B**, the drag operation is allowed across the menu screen **30** as shown in **FIG. 31** in practice.

[**0303**] **FIG. 28** illustrates the concept of scrolling through menu display entities.

[**0304**] In **FIG. 28**, the concept of scrolling through menu display entities on the menu screen **30** is illustrated with a menu display entity group **40** and the menu screen **30**.

[**0305**] The menu display entity group **40** refers to a plurality of menu display entities arranged in a column in a virtual plane in accordance with menu numbers assigned to respective menu display entities.

[**0306**] The menu numbers refer to numbers to identify the plurality of menu display entities and are serial numbers from "1" to "N" (total number of the menu display entities).

[**0307**] Among the menu display entities in the menu display entity group **40**, a menu display entity matching the menu display area **31** of the menu screen **30**, to be more specific, five menu display entities whose menu numbers are in succession are displayed in the menu screen.

[**0308**] The menu display entity group **40** may be moved in the upward/downward direction in the screen. The menu screen **30** is arranged in a fixed location. As the menu display entity group **40** moves in the upward/downward direction, the menu display entities matching the menu display area **31** of the menu screen **30** changes. Accordingly, the menu display entities in the menu screen **30** are scrolled in the same direction as that of the menu display entity group **40**.

[**0309**] The above scroll is executed in accordance with two parameters, the scroll direction and the scroll velocity v.

[**0310**] The scroll direction is the scroll direction of the menu display entities in the menu screen **30**, that is, the direction of travel of the menu display entity group **40**, either "upward", "downward" or "N/A".

[**0311**] The scroll velocity v us a velocity at which the menu display entities in the menu screen are scrolled in the above scroll direction, that is, a velocity at which the menu display entity group **40** is scrolled in the above scroll direction. To be more specific, the scroll velocity v is represented in the number of rows of the menu display entities scrolled per unit time.

[**0312**] For example, as shown in **FIG. 26**, in case the areas where Application D is displayed changed from the menu display area **31***a* to the menu display area **31***c* per unit time, the scroll velocity is "2".

[**0313**] The scroll direction and the scroll velocity v are determined as described below.

[**0314**] **FIG. 29** illustrates the scroll direction and the scroll velocity v.

[**0315**] In **FIG. 29**, the scroll direction and the scroll velocity v are determined by the menu display entity indicated by a current position pointer **41** and a destination pointer **42**.

[**0316**] The current position pointer **41** indicates the menu display entity as a candidate for selection, that is, the menu display entity displayed in the selection candidate display area **32**. Thus, the menu display entity indicated by the current position pointer **41** changes in accordance with the scroll, that is, the movement of the menu display entity group **40**.

[**0317**] The destination pointer **42** indicates the menu display entity to be determined as a candidate for selection, that is, the menu display entity to be displayed in the selection candidate display area **32**.

[**0318**] The menu display entity group **40** moves so that the menu display entity indicated by the destination pointer **42** will be displayed in the selection candidate display area **32**, or to be more specifically, so that the menu display entity indicated by the current position pointer **41** will match the menu display entity indicated by the destination pointer **42**.

[**0319**] In this figure, the current position pointer **41** indicates Application D and the destination pointer **42** Application G, respectively. Thus the scroll direction is "upward" and the menu display entity group **40** moves in the upward direction.

[**0320**] In this practice, the menu display entity group **40** moves at a scroll velocity corresponding to the inter-item distance w.

[**0321**] The inter-item distance w indicates the distance between the menu display entity indicated by the current position pointer **41** and the menu display entity indicated by the destination pointer **42**. To be more specific, the inter-item distance w is represented in the difference between the menu number of the menu display entity indicated by the current position pointer **41** and the menu number of the menu display entity indicated by the destination pointer **42**. Note that the inter-item distance w is an integer of 0 or more.

[**0322**] In the figure, the menu number of the menu display entity indicated by the current position pointer **41** is "4" while menu number of the menu display entity indicated by the destination pointer **42** is "7". Thus, the inter-item distance w is "3".

[0323] The scroll velocity v is given by the following expression based on the inter-item distance w:

$$v=f1(w) \quad (1)$$

[0324] where w≧=0, v≧0.

[0325] According to this expression, the travel velocity v is given by a function f1 whose variable is the inter-item distance w. The function f1 may be any function but desirably a function where the scroll velocity v increases as the inter-item distance w increases. Conversely, in case the inter-item distance w decreases as a result of scroll operation, the resulting scroll velocity becomes lower, which will give the user a feel of a smooth halt.

[0326] Thus, the function f1 shown in **FIG. 30** is adopted as the function f1.

[0327] **FIG. 30** shows a relationship between the inter-item distance w and the scroll velocity v (function f1). In **FIG. 30**, values of the inter-item distance w and values of the scroll velocity v are laid off as abscissas and ordinates, respectively.

[0328] According to **FIG. 30**, the scroll velocity v increases with an increase in the inter-item distance w. When the inter-item distance w reaches "4", the scroll velocity v becomes "v4". Above this point, the scroll velocity v may be the constant value "v4" irrespective of the value of inter-item distance w.

[0329] The menu display entity indicated by the destination pointer **42** gradually changes with a drag by the stylus pen **20**.

[0330] **FIG. 31** shows the drag operation using the stylus pen **20**. In this example, the menu screen **30** as an input screen follows the X-X Cartesian coordinate system whose origin is at the upper left corner of the screen.

[0331] In **FIG. 31**, the coordinate values of the indicated position (hereinafter referred to as the "start indicated position" as appropriate) P**0** assumed when the user caused the stylus pen **20** to come in contact with the LCD panel **11** (hereinafter referred to as "tap-in") and started the drag operation are (x**0**, y**0**). The coordinate values of the indicated position (hereinafter referred to as the "current indicated position" as appropriate) Pn at time tn are (xn, yn). The coordinate values of the indicated position (hereinafter referred to as the "last indicated position" as appropriate) Pn−1 at time tn−1 preceding time tn by Δt are (xn−1, yn−1).

[0332] The direction of drag (hereinafter simply referred to as the "drag direction") at time tn is determined based on whether yn is greater than, equal to, or smaller than yn−1. As shown in **FIG. 32**, the drag direction is "downward" in case yn>yn−1, "upward" in case yn<yn−1, and "N/A" in case yn=yn−1.

[0333] Thus, for example in **FIG. 31**, yn<yn−1 and the drag direction at time tn is "upward".

[0334] Based on the drag direction, the travel direction of the destination pointer **42** is given as shown in **FIG. 33**.

[0335] While a drag operation is made in the rightmost area of the menu screen for clarity in other drawings, the drag operation is allowed across the menu screen **30** as shown in **FIG. 8** in reality.

[0336] **FIG. 33** shows a relationship between the drag direction and the travel direction of the destination pointer **42**. According to **FIG. 33**, the travel direction of the destination pointer **42** is "upward" in case the drag direction is "downward", "downward" in case the drag direction is "upward", and "N/A" in case the drag direction is "N/A".

[0337] According to **FIG. 32**, the travel distance Δy of drag in the period from time tn−1 to time n, that is, Δt, is given by the following expression:

$$\Delta y=|yn-yn-1| \quad (2)$$

[0338] where Δy≧0.

[0339] According to this expression, the travel distance Δy of drag is given by the displacement in the direction of the Y axis at the time interval Δt.

[0340] Based on the travel distance Δy of drag, the travel distance Δw of the destination pointer **42** is given by the following expression:

$$\Delta w=f2(\Delta y) \quad (3)$$

[0341] where Δw≧0.

[0342] According to this expression, the travel distance Δw of the destination pointer **42** is given by the function whose variable is the travel distance Δy of drag. The function f1 may be any function but desirably a function where the travel distance Δw of the destination pointer **42** increases as the travel distance Δy of drag increases.

[0343] Thus, the function f2 shown in **FIG. 34** is adopted as the function f2.

[0344] **FIG. 34** shows a relationship between the travel distance Δy of drag and the travel distance Δw of the destination pointer **42** (function f2). In **FIG. 34**, values of the travel distance Δy of drag and values of the travel distance Δw of the destination pointer **42** are laid off as abscissas and ordinates, respectively.

[0345] According to **FIG. 34**, the travel distance Δw of the destination pointer **42** increases with an increase in travel distance Δy of drag. When the travel distance Δy of drag reaches "Δy5", the travel distance Δw of the destination pointer becomes "6". Above this point, the travel distance Δw is a constant value "6" irrespective of the value of the travel distance Δy.

[0346] The expression (3) may be replaced with the following expression:

$$\Delta w=f2(\Delta y)+k\times(\Delta y/\Delta t) \quad (3)$$

[0347] where k is a constant.

[0348] According to this expression, in the course of calculating the travel distance Δw, a change in the travel distance Δy of drag, that is, a velocity component of the drag can be added. This makes it possible to obtain the scroll velocity reflecting the influence of the drag velocity.

[0349] In this way, based on the travel direction and the travel distance Δw of the destination pointer **42** given in accordance with the drag, the destination pointer **42** moves and the menu display entity indicated by the destination pointer **42** changes.

[0350] **FIG. 35** shows how the menu display entity indicated by the destination pointer **42** changes. According to **FIG. 35**, the destination pointer **42** indicates Application G.

Assuming that "downward" and "2" are given as the travel direction of the destination pointer **42** and the travel distance Δw of the destination pointer **42** respectively, the destination pointer **42** moves in the downward direction by two rows in the figure. The menu display entity indicated by the destination pointer **42** changes from Application G to Application I.

[**0351**] In this way, the destination pointer **42** moves by the number of rows corresponding to the travel distance Δw in a given travel direction. The menu display entity indicated by the destination pointer **42** changes by the number of rows corresponding to the travel distance Δw in the given travel direction.

[**0352**] While scroll through menu display entities displayed in the menu screen **30** is made by way of a drag with the stylus pen **20**, operation input by way of the side controller **14** is also allowed.

[**0353**] To be more specific, in accordance with the input of "upward/downward" by way of the side controller **14**, the menu display entity indicated by the destination pointer **42** changes as described below.

[**0354**] When an input is made in the "upward/downward direction" by way of the side controller **14**, the travel direction of the destination pointer **42** is given as shown in **FIG. 13**.

[**0355**] **FIG. 36** shows a relationship between the input direction by way of the side controller **14** and the travel direction of the destination pointer **42**. According to **FIG. 36**, in case the input direction by way of the side controller **14** is "downward", the travel direction of the destination pointer **42** is "upward" while in case the input direction by way of the side controller **14** is "upward", the travel direction of the destination pointer **42** is "downward".

[**0356**] Based on the travel direction of the destination pointer **42** given in this way, the menu display entity indicated by the destination pointer **42** changes as shown in **FIG. 37**.

[**0357**] **FIG. 37** shows how the menu display entity indicated by the destination pointer **42** changes in accordance with the operation input by way of the side controller **14**. According to **FIG. 37**, the destination pointer **42** indicates Application E.

[**0358**] When an input is made in the "downward direction" by way of the side controller **14**, the destination pointer **42** moves in the downward direction by one row. The menu display entity indicated by the destination pointer **42** changes from Application E to Application F.

[**0359**] When an input is made in the "upward direction" by way of the side controller **14**, the destination pointer **42** moves in the upward direction by one row. The menu display entity indicated by the destination pointer **42** changes from Application E to Application D.

[**0360**] In this way, when an input is made in the "upward/downward direction" by way of the side controller **14**, the destination pointer **42** moves in the same direction as the input direction by one row. The menu display entity indicated by the destination pointer **42** changes by one row in the direction opposite to the input direction.

[**0361**] When a hold-down input is made in the "upward/downward direction", the menu display entity indicated by the destination pointer **42** changes as described below.

[**0362**] The "hold-down input" refers to a continuous input in the "upward/downward direction" by way of the side controller **14**. To be more specific, it refers to an operation of holding down the side controller **14** in the "upward direction" or "downward direction" for at least a predetermined period.

[**0363**] **FIG. 38** shows how the menu display entity indicated by the destination pointer **42** changes in accordance with hold-down of the side controller **14**. In this practice, the travel direction of the destination pointer **42** follows the relationship in **FIG. 36**.

[**0364**] In **FIG. 38**, the destination pointer **42** indicates Application E. According to **FIG. 38**A, holding down the side controller **14** in the "upward direction" causes the destination pointer **42** to move continuously in the upward direction. When hold-down operation of the side controller **14** is terminated, the destination pointer **42** halts. The menu display entity indicated by the destination pointer **42** changes from Application E to Application C.

[**0365**] According to **FIG. 38**B, holding down the side controller **14** in the "downward direction" causes the destination pointer **42** to move continuously in the downward direction. When hold-down operation of the side controller **14** is terminated, the destination pointer **42** halts. The menu display entity indicated by the destination pointer **42** changes from Application E to Application I.

[**0366**] Movement of the destination pointer **42** caused by hold-down operation of the side controller **14** is determined in accordance with the duration of the hold-down operation.

[**0367**] **FIG. 39** shows a relationship between the hold-down operation of the side controller **14** and the movement of the destination pointer **42**. In **FIG. 39**, the avis of abscissa represents the time, presence/absence of hold-down operation of the side controller **14**, that is, whether an input in the "upward/downward direction" is continued is shown in the upper area of the figure, and presence/absence of the movement of the destination pointer **42** is shown in the lower area of the figure, respectively.

[**0368**] According to **FIG. 39**, when hold-down operation of the side controller **14** is initiated at time ti, the destination pointer **42** moves in the travel direction corresponding to the input direction by one row. The menu display entity indicated by the destination pointer **42** changes in the travel direction by one row.

[**0369**] Next, when an initial wait time Tf has elapsed, the destination pointer **42** further moves in the travel direction by one row. The menu display entity indicated by the destination pointer **42** further changes in the travel direction by one row.

[**0370**] After that, each time the repeat time Tr has elapsed, the destination pointer **42** moves in the travel direction by one row. The menu display entity indicated by the destination pointer **42** changes in the travel direction by one row each time.

[**0371**] When the hold-down operation of the side controller **14** is terminated at time to, the destination pointer **42** no longer moves.

[0372] In case the menu display entity indicated by the destination pointer **42** has reached the uppermost of lowermost menu display entity even though the hold-down operation of the side controller **14** is ON, the destination pointer **42** no longer moves.

[0373] As mentioned above, in accordance with the operation input of the stylus pen **20** or side controller **14**, the menu display entity displayed in the menu screen scrolls.

[0374] Next, the method for activating an application program corresponding to the menu display entity will be described. The application program corresponding to the menu display entity is activated by way of the operation input using (1) the stylus pen **20** or (2) the side controller **14**.

[0375] When the application is activated, display on the screen **30** is terminated and the screen of the activated application appears on the LCD panel **11**.

(1) Activation Method by Way of the Stylus Pen

[0376] Activation of an application program corresponding to each menu display entity by way of the stylus pen **20** is made by way of ① tap or ② drag.

① Activation Method by Way of the Stylus Pen

[0377] Tapping the stylus pen **20** on any of the menu display entities displayed in the menu screen **30**, or to be more specific, the menu display area **31**, the application program corresponding to the menu display entity displayed in the tapped position is activated.

[0378] In case, as shown in **FIG. 26C** for example, the area where no menu display entities are displayed, that is, the menu display area **31***d*, **31***e*, is tapped on, no applications are activated.

② Activation Method by Way of a Drag

[0379] **FIG. 40** shows how an application is activated by way of a drag.

[0380] According to **FIG. 40**A, when a drag of the stylus pen **20** is terminated, scroll of the menu display entity displayed in the menu screen **30** halts. On Application D displayed in the selection candidate display area **32** is overlaid the focus **33** while the Application D is a candidate for selection. In this practice, the tip of the stylus pen **20** is kept in contact with the LCD panel **11**. When a predetermined time has elapsed, the menu screen **30** changes as shown in **FIG. 40B**.

[0381] In **FIG. 40**B, the focus **33** overlaid on Application D appears in a dark color. At the same time, the Application D changes from "candidate for selection" state to "activation wait" state.

[0382] After that, when the stylus pen **20** which has been in contact with the LCD panel **11** is released from the LCD panel **11** (hereinafter referred to as "tap-out" as appropriate), an application program corresponding to Application D awaiting activation is activated.

[0383] In **FIG. 40**A, when the tip of the stylus pen **20** is released from the LCD **11** before the predetermined time elapses, that is, the tap-out operation is made, no applications are activated although Application D is displayed in a dark color.

[0384] In this way, a sequence of operation including scroll, selection of a desired menu display entity, and activation of an application may be executed with a single drag, thereby enhancing its operability.

[0385] A drag is available as a method for selecting a desired menu display entity as well as a tap. In case a desired menu display entity is not displayed in the menu screen **30**, a drag is used, and in case it is displayed, a tap is used, in a selective way. In any case, it is possible to readily select a desired menu display entity thus enhancing its operability.

(2) Activation Method by Way of the Side Controller

[0386] Activation of an application program corresponding to each menu display entity by way of the side controller **14** is made as described below.

[0387] A"push" on the side controller **14** activates an application program corresponding to the menu display entity currently being a candidate for selection.

[0388] For example, in **FIG. 40**A, Application D is a menu display entity as a candidate for selection. A "push" on the side controller **14** activates an application program corresponding to the Application D.

[0389] **FIG. 41** is a block diagram showing the functional configuration of a PDA**1**. As shown in **FIG. 41**, the PDA**1** comprises an input section **100**, a display section **200**, a processor **300**, and a storage section **400**.

[0390] The input section **100** is a functional block for the user of the PDA**1** to input various operation instructions. To be more specific, the input section **100** comprises a touch panel of the LCD panel **11** in **FIG. 24, a** side controller **14**, an escape key **15**, and a power key **16**. In case these components are operated, the input section **100** outputs an operation signal corresponding to the operation to the processor **300**. For example, the input section **100** outputs an operation signal indicating the coordinate values of the touch panel indicated (pressed) with the tip of the stylus pen **20**, "upward/downward direction" of the side controller **14**, or a "push" to the processor **300**.

[0391] The display section **200** is a functional block for displaying the display screen in accordance with a display signal input from the processor **300** and to be more specific, corresponds to the LCD panel **11** in **FIG. 24**. The display section **200** displays the menu screen **30** in the main display area **11***a* formed on the LCD panel **11**.

[0392] The processor **300** is a functional block for performing centralized control of the components of the PDA**1** and implementing the functions of the PDA**1**. The processor **300** corresponds to the control unit **18** in **FIG. 24**.

[0393] The processor **300** comprises a menu display section **310** and an application activation controller **320**.

[0394] The menu display controller **310** performs various types of control related to display of the menu screen **30**. For example, the menu display controller **310** displays the menu screen shown in **FIG. 26** in the display section **200**.

[0395] The menu display controller **310** comprises an input determination section **311**, a destination setting section **312**, a scroll velocity controller **313**, and a scroll display controller **314**.

[0396] The input determination section **311** determines the presence/absence of an operation input from the input section **100** and determines the type of an operation corresponding to an operation input, if any. For example, the input determination section **311** determines whether the operation input is received from the LCD panel **11** (touch panel) or the side controller **14**.

[0397] The destination setting section **312** moves the destination pointer **42** in accordance with an input signal from the input section **100** and updates the destination number.

[0398] The scroll velocity controller **313** calculates the scroll direction and the scroll velocity v based on the menu display entity indicated by the current position pointer **41** and the destination pointer **42**, that is, scroll target data **423** and updates scroll control data **425**.

[0399] The scroll display controller **314** moves the menu display entity group **40** based on the scroll control data **425** and scrolls through the menu display entities displayed in the menu screen **30** and updates the current position number.

[0400] The application activation controller **320** calls the application program from the storage section **400** based on application activation condition data **426** and executes the application program. Also, in response with a tap by way of the stylus pen **20** or a "push" on the side controller **14**, the application activation controller **320** calls the application program from the storage section **400** and executes the application program.

[0401] The storage section **400** stores an application program **411**, a control program as display control information, and control data in order to implement the functions of various programs and data related to PDA1 and the functions in this embodiment as well as temporarily stores processing data related to execution of these programs and input data from the input section **100**.

[0402] The application program **411** is for example a program related to various applications to be implemented on the PDA1 including "mail software", "browser software" and "scheduling software". A specific program s provided per menu display entity.

[0403] The control data includes menu screen data **421**, menu display entity data **422**, scroll target data **423**, indicated position data **424**, scroll control data **425**, application activation condition data, a scroll velocity calculation expression **427**, and a travel distance calculation expression **428**.

[0404] The menu screen data **421** is data for the menu display section **200** to display the menu screen **30** and includes for example the position coordinates of the menu display area **31**.

[0405] The menu display entity data **422** is data on a plurality of menu display entities to be displayed in the menu display area **31**. The data structure of the menu display entity data is shown in **FIG. 42**.

[0406] **FIG. 42** shows the data structure of the menu display entity data. As shown in **FIG. 42**, the menu display entity data comprises menu numbers, icons, and menu names keyed to a plurality of menu display entities.

[0407] The scroll target data **423** is data used as scroll target and includes current position numbers and destination numbers, as shown in **FIG. 43A**. The scroll velocity controller **313** calculates the scroll direction ad the scroll velocity v based on the scroll target data **423**.

[0408] The current position number is the menu number of the menu display entity as a candidate for selection, that is, the menu display entity indicated by the current position pointer **41**.

[0409] The destination number is the menu number of a menu display entity which should match the menu display entity indicated by the current position pointer **41** that is, the menu number of the menu display entity indicated by the destination pointer **42**.

[0410] The indicated position data **424** is data on the position on the LCD panel **11** indicated by the stylus pen **20**. As shown in **FIG. 43**B, the indicated position data **424** includes the current indicated position Pn and the last indicated position Pn−1. The destination setting section **312** moves the destination pointer **42** based on the indicated position data **424**.

[0411] The scroll control data **425** is data for controlling the scroll of a menu display entity. As shown in **FIG. 43**C, the scroll control data **425** includes the scroll direction and the scroll velocity v. The scroll display controller **314** moves the menu display entity group **40** based on the scroll control data **425** and scrolls the menu display entities displayed in the menu screen.

[0412] The application activation condition data **426** refers to conditions for a menu display entity as a candidate for selection being placed in the activation wait state. As shown in FIG. **43**D, the application activation condition data **426** includes the continuous standstill time and the activation wait reference time.

[0413] The continuous standstill time is a duration a drag is halted without being tapped out. The activation wait reference time is the upper limit of the continuous standstill time.

[0414] The application activation controller **320** places the menu display entity currently being a candidate for selection into the activation wait state based on the application activation condition data, or to be more specific, when the continuous standstill time exceeds the continuous wait reference time.

[0415] The scroll velocity calculation expression **427** is an expression used to calculate the scroll velocity v from the inter-item distance w. To be more specific, the scroll velocity calculation expression **427** is represented in the expression (1) or a graph shown in **FIG. 30**.

[0416] The travel distance calculation expression **428** is an expression used to calculate the travel distance Δw of the destination pointer **42** from the travel distance Δy of a drag. To be more specific, the travel distance calculation expression **428** is represented in the expression (3) or a graph shown in **FIG. 34**.

[0417] Next, the operation of the PDA1 in this embodiment will be described.

[0418] **FIGS. 44 through 46** are flowcharts showing the operation of the PDA1. This operation is executed in accor-

dance with the control program **412** stored by the processor **300** into the storage section **400**.

[**0419**] As shown in **FIG. 44**, when the PDA**1** is powered by way of the operation of the power key **16**, the menu display controller **310** references the menu screen data **421** and the menu display entity data **422** to display the menu screen **30** (initial screen) on the display section **200** (step S**11**). In this practice, the menu display controller **310** displays the menu display entity whose menu number is "1" in the menu display area **31***a*.

[**0420**] Then the PDA**1** awaits an operation input from the input section **100**.

[**0421**] In case any operation input is made from the input section **100** (step S**12**: YES), the input determination section **311** determines whether the operation is from the LCD panel **11** or from the side controller **14** (step S**13**).

[**0422**] As a result, in case the input determination section **311** has determined that the operation is from the LCD panel **11** (step S**13**: YES), the input determination section **311** determines whether the operation is a tap or a drag (step S**14**).

[**0423**] In case the input determination section **311** has determined that operation is a tap (step S**14**: YES), the input determination section **311** determines whether the indicated position by the stylus pen **20** is included in which menu display area **31** (step S**15**).

[**0424**] In case the input determination section **311** has determined that whether the indicated position is included in any menu display area **31** (step S**15**: YES), the Application activation controller **320** identifies the menu display area **31** which includes the indicated position and calls the application program **411** corresponding to the menu display entity displayed in the identified area and execute the application program (step S**16**).

[**0425**] Terminating the execution of the application program **411** (step S**17**: YES), the processor **300** executes step S**12** and awaits the next operation input.

[**0426**] In case the processor **300** has determined in step S**15** that the indicated position by the stylus pen **20** is not included in any menu display area **31** (step S**15**: NO), the processor **300** executes step S**12** and awaits the next operation input.

[**0427**] In case the input determination section **311** has determined in step S**14** that the operation input from the LCD panel **11** is not a tap but a drag (step S**14**: NO), the input determination section **311** acquires the start indicated position as well as sets the acquired coordinate values as a last indicated position Pn−1 (step S**18**). The destination setting section **312** sets the continuous standstill time to "**0**" (step S**19**).

[**0428**] In **FIG. 46**, when a predetermined has elapsed (specifically "Δt") (step S**20**: YES), the input determination section **311** determines whether a tap-out was made (step S**21**).

[**0429**] In case the input determination section **311** has determined that tap-out was not made, (step S**21**: NO), the input determination section **311** acquires the current indicated position Pn (step S**22**. Based on the acquired current indicated position Pn and last indicated position Pn−1, the destination setting section **312** moves the destination pointer **42**.

[**0430**] As described referring to **FIGS. 31 through 34**, based on whether the Y coordinate value of the current indicated position Pn is greater than, equal to, or smaller than the Y coordinate value of the last indicated position Pn−1, the drag direction is calculated. Based on the drag direction, the travel direction of the destination pointer **42** is calculated. Then, the travel distance Δy of a drag is calculated. Referring to the travel distance calculation expression **428**, the travel distance Δw of the destination pointer **42** is calculated (step S**23**).

[**0431**] In this way, having calculated the travel direction and the travel distance Δw of the destination pointer **42**, the destination setting section **312** updates the destination number to value obtained by incrementing/decrementing the destination number by the travel distance Δw (step S**24**).

[**0432**] Then, the destination setting section **312** compares the updated destination number with the minimum value of the menu number ("1") (step S**25**).

[**0433**] In case the destination number is less than the minimum value of the menu number (step S**25**: NO), the destination setting section **312** sets the minimum value of the menu number to the destination number (step S**26**). Then execution proceeds to step S**29**.

[**0434**] In case the destination number is equal to or greater than the minimum value of the menu number (step S**25**: YES), the destination setting section **312** compares the destination number with the maximum value of the menu number ("N") (step S**27**).

[**0435**] In case the destination number exceeds the maximum value of the menu number (step S**27**: NO), the destination setting section **312** sets the maximum value of the menu display entity to the destination number (step S**28**). Then execution proceeds to step S**29**.

[**0436**] When the destination number has been compared with the minimum value/maximum value of the menu number and the destination number has been updated in accordance with the comparison result, the scroll velocity controller **313** calculates the scroll direction and the scroll velocity v based on the current position number and the destination number (step S**29**).

[**0437**] As described referring to **FIGS. 29 and 30**, based on whether the current position number is greater than, equal to, or smaller than the destination number, the scroll velocity controller **313** calculates the scroll direction.

[**0438**] The scroll velocity controller **313** also calculates the inter-item distance w, that is, the difference between the current position number and the destination number, reference the Scroll velocity calculation expression **427**, and calculates the scroll velocity v based on the obtained inter-item distance w.

[**0439**] Having calculated the scroll direction and the scroll velocity v, the scroll velocity controller **313** determines whether the calculated scroll velocity is "0" (step S**30**).

[**0440**] In case the scroll velocity controller **313** has determined that the scroll velocity is "**0**" (step S**30**: YES), the

scroll velocity controller **313** updates the continued standstill time to a value obtained by adding "Δt" to the continued standstill time (step S**31**).

[**0441**] In case the scroll velocity controller **313** has determined that the scroll velocity is not "0" (step S**30**: NO), the scroll velocity controller **313** updates the continued standstill time to "0" (step S**32**).

[**0442**] Having updated the continued standstill time, the scroll velocity controller **313** sets the current indicated position Pn to the last indicated position Pn−1 (step S**33**). Then the scroll velocity controller **313** executes step S**20** and repeats the same processing.

[**0443**] In case a tap-out is determined in step S**21** (step S**21**: YES), the Application activation controller **320** compares the continued standstill time with the activation wait reference time (step S**34**).

[**0444**] In case the Application activation controller **320** has determined that the continued standstill time is equal to or greater than the activation wait reference time (step S**34**: YES), the Application activation controller **320** calls the application program **411** corresponding to the menu display entity currently being a candidate for selection and executes the application (step S**35**).

[**0445**] Having executed the application program **411** (step S**36**: YES), execution proceeds to step S**12**, awaiting the next operation input.

[**0446**] In case the processor **300** has determined that the continued standstill time is less than the activation wait reference time (step S**34**: NO), the processor **300** executes step S**12** and awaits the next operation input.

[**0447**] In case it is determined that the operation input by the input section **100** is an input from the side controller **14** (step S**13**: NO), the input determination section **311** determines whether the operation is a "push" or an input of "upward/downward direction" (step S**37**) in **FIG. 46**.

[**0448**] In case the input determination section **311** has determined that the operation is a "push" on the side controller **14** (step S**37**: YES), the Application activation controller **320** calls the application program **411** corresponding to the menu display entity having the menu number indicated by the current position number, that is, the menu display entity currently being a candidate for selection and executes the application (step S**38**).

[**0449**] When the application has been executed (step S**39**: YES), execution proceeds to step S**12** and awaits the next operation input.

[**0450**] In case the input determination section **311** has determined that the operation is an input of "upward/downward direction" by way of the side controller **14** (step S**37**: NO), the input determination section **311** determines whether the input is a hold-down operation (step S**40**).

[**0451**] In case the input determination section **311** has determined that the operation is not a hold-down input (step S**40**: NO), the destination setting section **312** moves the destination pointer **42** based on the input direction.

[**0452**] As described referring to **FIGS. 35 and 36**, the travel direction of the destination pointer **42** is calculated based on the input direction. Then, in accordance with the travel direction, the destination number is updated to a value obtained by incrementing/decrementing the destination number by "1" (step S**41**).

[**0453**] Next, same as steps S**25** through S**28**, the destination setting section **312** compares the destination number with the minimum value/maximum value of the menu number and updates the destination number based on the comparison result (step S**42**). The scroll velocity controller **313** calculates the scroll direction and the scroll velocity v based on the current position number and the destination number (step S**43**).

[**0454**] Then execution proceeds to step S**12** and awaits the next operation input.

[**0455**] In case the input determination section **311** has determined that the input of "upward/downward direction" by way of the side controller **14** is a hold-down operation (step S**40**: YES), the input determination section **311** waits for the initial wait time Tf to elapse (step S**44**: YES), then determines whether the hold-down operation is continued (step S**45**).

[**0456**] In case the input determination section **311** has determined that the hold-down operation is continued (step S**45**: YES), same as steps S**41** and S**42**, the destination setting section **312** calculates the travel direction of the destination pointer **42** based on the input direction as well as updates the destination number to a value obtained by incrementing/decrementing the destination number by "1" in accordance with the travel direction (step S**46**). Then, the destination setting section **312** compares the destination number with the minimum value/maximum value of the menu number and updates the destination number based on the comparison result (step S**47**).

[**0457**] Same as step S**43**, the scroll velocity controller **313** calculates the scroll direction and the scroll velocity v based on the current position number and the destination number (step S**48**).

[**0458**] When the repeat time Tr has elapsed (step S**49**: YES), the processor **300** executes step S**45** and repeats the same processing.

[**0459**] In case the input determination section **311** has determined that the hold-down operation is not continued (step S**45**: NO), the processor **300** executes step S**12** and awaits the next operation input.

[**0460**] While not shown in **FIGS. 44 through 47**, this processing terminates as follows. When power off of the PDA**1** is instructed by the input section **100**, the processor terminates the application under execution as well as terminates the display of the menu screen **30** then terminates this processing.

[**0461**] With such a configuration, a drag is allowed across the menu screen **30** where a plurality of menu display entities are displayed, that is, across the main display area **11***a* of the LCD panel **11**. A scroll through the menu display entities is executed by the drag. To make a scroll, the user has only to perform a drag like a process of drawing arbitrary lines.

[**0462**] The menu display entity displayed in the selection candidate display area **32** is a candidate for selection as a result of scroll. Easy operation of a single drag serves as an

instruction to scroll and selection of a menu display entity, thereby enhancing its operability.

[0463] The invention is not limited to the above embodiments but modification is allowed without departing from the spirit of the invention.

[0464] For example, while the menu display entity group **40** comprises a plurality of menu display entities in a row in the above embodiments, the plurality of menu display entities may be arranged in a row, or arbitrary arrays such as in bidirectional column/row directions.

[0465] While the travel direction of the menu display entity group **40** is either upward or downward, the travel direction may be an arbitrary direction such as the rightward/leftward direction or diagonal direction. In this case, the scroll direction of a menu display entity is the arbitrary direction.

[0466] While the menu screen **30** is fixed and the menu display entity group **40** moves in the concept of scroll shown in **FIG. 28**, the menu display entity group **40** may be fixed and the menu screen **30** may move. Both the menu screen **30** and the menu display entity group **40** may move.

[0467] As shown in **FIG. 47**, the menu display entity group **40** may be arranged in a virtual space and the menu display entity group **40** seen from an arbitrary virtual camera F in the virtual space may be used as the menu screen **30**.

[0468] As shown in **FIG. 47**A, by moving the virtual camera F in parallel with the arrangement direction of the menu display entity group **40**, the menu display entity group **40** displayed in the menu screen **30** scrolls. Conversely, the virtual camera R may be fixed and the menu display entity group **40** may move in parallel with the arrangement direction.

[0469] As shown in **FIG. 47**B, in case the light of sight of the virtual camera F is slanted against the menu display entity group **40**, the menu screen **30** having a depth is displayed.

[0470] In this way, by moving the virtual camera F whose light of sight is oriented toward the virtual face where the menu display entity is arranged, that is, the menu display entity group **40**, scroll display is allowed. This simplifies the control of scroll in a virtual space.

[0471] While the menu display entity group **40** comprises a plurality of menu display entities arranged in a virtual plane, the virtual plane may be a curved surface such as a lateral face of a cylinder, as shown in **FIG. 49A**.

[0472] In this case, by rotating the cylinder about its axis or moving the virtual camera F along the lateral face of the cylinder, the menu screen **30** is displayed as shown in **FIG. 49B**. That is, the size of the menu display entity to be displayed changes thus displaying a three-dimensional menu screen.

[0473] While the selection candidate display area **32** is fixed on the menu screen in this embodiments, the selection candidate display area **32** may be variable.

[0474] In this case, the selection candidate display area **32** may be associated with scroll. As shown in **FIG. 50**, in case the uppermost menu display entity of the menu display entity group **40** matches the menu display area **31***a* in the menu screen **30**, the selection candidate display area **32** is changed to the menu display area **31***a*. In accordance with an upward scroll, the selection candidate display area **32** is sequentially changed to the menu display area **31***b*, **31***c*, . . . and so on.

[0475] When a scroll has reached a menu display entity located approximately in the middle of the menu display entity group **40**, the selection candidate display area **32** is changed to the approximate center of the menu display area **31**, that is, the menu display area **31***c*, as shown in **FIG. 50B**.

[0476] In case the lowermost menu display entity matches the menu display area **31***e* after a further upward scroll as shown in **FIG. 50**C, the selection candidate display area **32** is changed to the menu display area **31***e*.

[0477] Further, the selection candidate display area **32** may be arbitrarily changed by way of an instruction input by the user.

[0478] While an application program corresponding to a menu display entity which shifted to the activation wait state is activated by halting a drag and performing a tap-out after a predetermined period in that state in the embodiments, an application program corresponding to a menu display entity which is a candidate for selection at the point of tap-out may be activated.

[0479] While the current position number is the menu number of the menu display entity indicated by the current position pointer **41**, that is, an integer in the embodiments, the current position number may be a positive real number.

[0480] For example, for example in **FIG. 6**, the current position pointer **41** indicates "Application D". As the menu display entity group **40** moves upward, the menu display entity indicated by the current position pointer **41** changes from Application D" to "Application E". That is, the current position number changes from "4" to "8" in a digital fashion. This numeral value is varied as a real number.

[0481] Thus, the current position number assumes the value of the real number and the scroll velocity v changes smoothly in a curve like one shown in **FIG. 30**. This allows a smoother scroll such as smooth deceleration of a scroll immediately after a drag.

[0482] While the invention is applied to a PDA in the embodiments, the invention may be applied to other personal information terminals such as a cell phone.

[0483] The invention may be further applied to electronic apparatus such as a set-top box or a PC, or a game machine. In this case, the display of a TV connected to the electronic apparatus works as the display section **200**.

[0484] A portable information terminal equipped with a touch panel according to the invention features the enhanced operability of menu display and provides the user with a feel of operability specific to the touch panel.

Third Embodiment

[0485] A second embodiment of the invention will be described referring to drawings. The dimensions, materials, shapes and relative arrangement of the components in the examples shown are not intended to limit the invention but illustrated by way of example, unless specifically described.

[0486] Referring to **FIG. 51**, the portable information terminal (PDA) shown is of a size the user can hold in his/her hand. ON the front face of an armored case **611** is arranged a liquid crystal panel **612** comprising a touch panel **612***a* across its entire surface. (The touch pane **612***a* is arranged for example on the surface of the liquid crystal panel **612**.) The armored case **611** comprises, as mentioned later, a control switch (hereinafter referred to as the side controller) **613**, an escape switch **614**, a power on/off switch (hereinafter referred to as the power switch) **615**, an insertion slot **616** where an external memory medium is inserted, an external connection terminal **617** used to perform communications of various data, and a storage unit **619** for storing a touch pen (stylus pen) **618**.

[0487] As shown in **FIG. 51**, the side controller **613**, the escape switch **614**, and the power switch **615** are arranged in an array on the lateral face of the armored case **611**. In the example shown, the side controller **613**, the escape switch **614**, and the power switch **615** are arranged in order from the top of the figure. The side controller **613** is arranged at the position where the thumb of the left hand of the user is most likely to be positioned when the user holds the armored case **611** with his/her left hand so that the liquid crystal panel **614** will face the front.

[0488] On the top of the side controller **613** is formed a protrusion **611***a* extending in the outer direction. Part of the side controller **613** is exposed out of the lateral face of the armored case **411**. The side controller **611** is supported by a shaft body (not shown) extending from the front face to the rear face oscillatably (rotatably) in a predetermined range in directions shown by arrows A in solid lines in the figure (upward/downward directions), while allowing a push (an arrow B in a solid line in the figure) in a direction orthogonal to the shaft body (direction from the lateral face to inside). The rotation (oscillation) range is limited to a range where the rotation (oscillation) is allowed with an approximate single push-up or push-down operation by way of the thumb of the user's left hand. On the exposed face of the side controller **613** is formed for example a corrugated protrusion **613***a*.

[0489] As mentioned earlier, the side controller **613** is rotated (oscillated) or pushed for example with the thumb of the user's left hand. In this practice, the thumb of the user's left hand comes in touch with the protrusion **613***a*. When not operated, the side controller **613** is located in a predetermined position (hereinafter referred to as the reference position). Under a push-up operation with the thumb of the user's left hand in the upward direction from the reference position, the side controller **613** rotates (oscillates) a predetermined rotation amount (oscillation amount) and does not rotate (oscillate) any further. When the thumb of the user's left hand is released from the side controller **613** (that is, removing the force to rotate (oscillate) the side controller **613**), the side controller **613** automatically returns to the reference point.

[0490] Similarly, Under a push-down operation with the thumb of the user's left hand in the downward direction from the reference position, the side controller **613** rotates (oscillates) a predetermined rotation amount (oscillation amount) and does not rotate (oscillate) any further. When the thumb of the user's left hand is released from the side controller **613**, the side controller **613** automatically returns to the reference point. The push operation is allowed only in the reference point. The side controller **613** is operated with the thumb of the user's left hand holding the PDA itself as mentioned earlier. Thus the movement of the thumb is limited and a complicated operation is difficult. As a result, the oscillating operation is easier than the rotating operation which requires a more complicated operation process. Thus, the side controller **613** is preferable subject to oscillating operation.

[0491] The side controller **613** sends an operation signal in accordance with the rotating operation (oscillating operation) or push operation, and various processing is executed in accordance with this operation signal as mentioned later.

[0492] As mentioned earlier, below the side controller **613** is arranged an escape switch **614**. Below the escape switch **614** is arranged a power switch **615**. On the surface of the power switch **615** is formed a plurality of point-shaped protrusions. The side controller **613**, the escape switch **614**, and the power switch **615** are arranged in positions for example where they can be operated with the thumb of the left hand of the user.

[0493] In the example shown, the escape switch **614** is pushed (an arrow C in a solid line) which sends an escape (ESC) signal and triggers an escape operation as mentioned later. The power switch **615** undergoes a slide operation (an arrow D in a solid line) (sliding the power switch **615** in the upward direction shown in the figure turns on the power and places the power switch **615** in the original position. Sliding the power switch **615** in the upward direction with power on turns off the power and places the power switch **615** in the original position.)

[0494] When connected to a dedicated recharging unit (a so-called cradle unit) for example equipped with a communications function via the external connection terminal **617**, the PDA shown can perform data communications with a personal computer. The LCD panel **612** is for example a color liquid crystal display unit and comprises a backlight as required. The touch panel **612***a* has a touch sensor for detecting the contact position (touch position) and the contact locus of the touch pen **618** which touched (tapped on) the touch panel **618***a*.

[0495] Referring to **FIG. 52**, the PDA shown comprises a comprises a central processing unit (CPU) **621** and controls the entire PDA in accordance with a control program stored in a storage section **622** such as a ROM and execute various processing mentioned later in accordance with application programs stored in the storage section **622**. An application program may be loaded from an external memory medium inserted into the insertion slot **616**. To the CPU **621** is connected a read-/write-enable storage section **622***a* such as a RAM (the storage section **622***a* is nonvolatile and its contents are not lost after power is turned off).

[0496] As shown in the figure, the side controller **613** is connected to the CPU **621** via a side controller operation detector **623** and the escape switch **614** is connected to the CPU **621** via an escape switch operation detector **624**. The CPU **621** is further connected to the power switch **615** via a power switch operation detector **625**. The CPU **621** is connected to the touch panel **612***a* via a touch panel operation detector **626**. Also, the CPU **621** is connected to the crystal liquid panel **612** via a crystal panel driver **627**.

[0497] The PDA shown comprises a mail transceiver (mail communications function) **628**. The mail transceiver **628** is connected to the CPU **621**. The mail transceiver **628** is connected to a communications card unit (not shown) such as a cell phone via the insertion slot **616** and performs mail communications via the communications unit. Each time a mail is sent or received, the CPU **621** records a sent mail or a received mail into the storage section **622***a*. The sent mails and received mails may be read from the storage section **622***a* for later browsing.

[0498] In case the power switch **615** is pushed up while the PDA is powered off, the power switch operation detector **625** detects this operation and supplies a signal to operate the power switch **615** to the CPU **621**. The CPU **621** responds to the power switch operation signal to turn on the power of the PDA. When the power is turned on, the CPU **621** performs drive control of the liquid crystal panel driver **627** to display an initial screen (menu screen; hereinafter referred to as the launcher screen) as one of the application programs on the liquid crystal panel **612**.

[0499] Referring to **FIG. 53**A, on the launcher screen are displayed, as menu items, for example, application programs related to Mail, Browser, Address book, Schedule, Memo pad, File viewer, Accessory, System, and Setting, together with icons. In the storage section **622** are stored application programs (application software) related to theses menu items.

[0500] **FIG. 53A** shows a first display mode where menu items are three-dimensionally displayed in an approximate cylinder (approximate arc). **FIG. 53B** shows a second display mode where menu items are three-dimensionally displayed in approximate flat plates slanted toward the direction of depth in the screen with a three-dimensional feel of depth. **FIG. 53C** shows a third display mode where menu items are displayed in a plane. **FIGS. 53A and 53B** display menu items almost three-dimensionally and **FIG. 53C** displays menu items two-dimensionally.

[0501] To switch between these display modes, the user taps on a mode switching icon **631** to sequentially select the first display mode, the second display mode, and the third display mode.

[0502] In any of the first to third display modes, a task bar **632** is displayed in the lower area of the launcher screen, and a title bar **633** is displayed in the upper area of the screen. The mode switching icon **631** is provided in the title bar **633**. Between the task bar **632** and the title bar **633** is specified a window display section (menu item display section) **634**.

[0503] When the side controller **613** is operated in the upward direction (rotated or oscillated) from the reference point, the side controller operation detector **623** detects the upward operation and supplies an upward operation signal to the CPU **621**. In response to this, the CPU **621** moves a cursor in the upward direction in the launcher screen.

[0504] When the side controller **613** is operated in the downward direction from the reference point, the side controller operation detector **623** detects the downward operation and supplies a downward operation signal to the CPU **621**. In response to this, the CPU **621** moves a cursor in the downward direction in the launcher screen.

[0505] When a cursor **637** is positioned on one of the menu items and the side controller **613** is pushed, the side controller operation detector **623** detects this push operation and supplies a push operation signal to the CPU **621**. In response to this, the CPU **621** selects a menu item where the cursor **637** is positioned and activates an application program corresponding to the selected menu item. Then the system makes a transition to the operation screen corresponding to the menu item.

[0506] As shown in **FIG. 53**A, in the first mode, upward and downward scroll buttons **635** and **636** are respectively displayed in the upper left area and lower left area of the launcher screen. In the second mode, the upward and downward scroll buttons **635** and **636** are respectively displayed in the upper center area and lower center area of the launcher screen. In the third mode, the upward and downward scroll buttons **635** and **636** are respectively displayed in the upper left area and lower left area of the launcher screen.

[0507] Tapping on the upward or downward scroll buttons **635** or **636** scrolls through the launcher screen in the upward or downward direction and positions the cursor on a desired menu item. When the cursor **637** is positioned on the uppermost menu item (mail) in the launcher screen, the upward scroll button **635** disappears from the screen. Similarly, when the cursor **637** is positioned on the lower most menu item (Application B) in the launcher screen, the downward scroll button **636** disappears from the screen.

[0508] Referring to **FIG. 53** and **FIG. 44**, in launcher screen of **FIGS. 53A through 53C**, when the side controller **613** is oscillated and a cursor (focus) is positioned on the menu item: accessory, then the side controller **613** is pushed or a predetermined time has elapsed, the CPU **621** displays the accessory operation screens (menu screens) shown in **FIGS. 54A through 54G** on the liquid crystal panel **612** in order. That is, when the cursor is positioned on the accessory and for example a predetermined time has elapsed in a launcher screen as a higher-layer menu screen, the CPU **621** makes a transition to the accessory operation screen as a lower-layer menu screen.

[0509] In the accessory operation screen, the take bar **632** is displayed in the lower area and the title bar in the upper area. The mode switching icon **631** is provided in the title bar **633**. Tapping on the mode switching icon **631** switches between the display modes of the accessory operation screen, same as the first to third modes of the launcher screen (switching between display modes is not directly related to the invention so that the description is omitted). Between the task bar **632** and the title bar **633** is specified a window display section (menu item display section) **641**.

[0510] To the left of the window display section **641** are arranged icons **640** representing the menu items in the launcher screen (Mail, Browser, Address book, Schedule, Memo pad, File viewer, Accessory, and System) in the vertical direction, and are displayed the upward and downward scroll buttons **635** and **636**. Tapping on the upward or downward scroll button **635** or **636** moves a cursor **37** (not shown in **FIG. 54**) between the icons **640**.

[0511] While the accessory operation screen is displayed, the cursor **637** (not shown in **FIG. 54**) is positioned on the icon indicating the accessory.

[0512] At the top and bottom of the window display section **641** are respectively displayed an upward scroll

button **641***a* and a downward scroll button **641***b*. Tapping on the upward or downward scroll button **641***a* or **641***b* moves a cursor **651** between window frames mentioned later in the upward or downward direction.

[**0513**] The CPU **621** displays at least one window frame two sides of which are concave. In the example shown, total eight window frames **642** are arranged at predetermined intervals in the vertical direction in the figure. Each window frame **642** has a first display frame **642***a* and a second display frame **642***b* whose width is smaller than that of the first display frame.

[**0514**] The CPU **21**, after displays the accessory operation screen of **FIG. 54A** as mentioned above, sequentially shifts the accessory operation screen to the display state shown in **FIG. 54C** via the display state shown in **FIG. 54B**. In the display state shown in **FIG. 54**C, menu items (lower-layer menu item) which belong to the accessory appear in faint relief together with their icons and menu item names. The size of each of the icons and the menu items is small. In the state shown in **FIG. 54**C, lower-layer menu items appear in relief in the window display section **641**, free from the window frames **642**.

[**0515**] The lower-layer in this accessory operation screen includes Hand-written note, Alarm clock, World clock, Calculator, and Tutorial.

[**0516**] The CPU **621** places the accessory operation screen in the state shown in **FIG. 54D**. In the state shown in **FIG. 54**D, the lower-layer menu items (icons and menu items names) are gradually scaled up (zoomed in) while the display appears a little crisper.

[**0517**] The CPU **621** zooms in on the lower-layer menu items (icons and menu items names) as well as moves each menu item in the direction of the window frame **642**. In this practice, zoom-in operation is complete and the icons **652** and the menu items names **653** are substantially crisp (see **FIG. 54E**).

[**0518**] The CPU **621** makes crisp the icons **652** and the menu items names **653** and positions lower-layer menu items on the window frames **642** starting with the top of the accessory operation screen (see **FIG. 54F**) and finally displays the accessory operation screen shown in **FIG. 54G**. In the state shown in **FIG. 54**G, an icon is displayed in the first display frame **642***a* and a menu item name is displayed in the second display frame **642***b*.

[**0519**] In the state shown in **FIG. 54**G, oscillating the side controller **613** moves the cursor **651** between window frames **642**. Positioning the cursor **651** on a desired window frame **642**, that is, a desired lower-layer menu item and pushing the side controller **613** causes the CPU **621** to activate an application program corresponding to the menu item where the cursor **651** is positioned, then makes a transition to the operation screen of the application program.

[**0520**] While display control of lower-layer menu items in a transition from the launcher screen as a higher-layer menu screen to the accessory operation screen as a lower-layer menu screen has been described in the above example, display control of lower-layer menu items is executed in a transition from the launcher screen to a lower-layer menu screen other than the accessory operation screen as well as a transition to the accessory operation screen, as long as the lower-layer menu screen has a plurality of lower-layer menu items.

[**0521**] For example, tapping on the upward or downward scroll button **635** or **636** while the accessory operation screen is displayed to position a cursor on an icon other than the icon **640** indicating the accessory causes the CPU **621** to switch over the screen display.

[**0522**] TO be more specific, as long as the lower-layer menu screen corresponding to the menu items in the launcher screen has a plurality of lower-layer menu items, display control of lower-layer menu items is executed as mentioned above.

[**0523**] In case the lower-layer menu screen corresponding to the menu items in the launcher screen does not have a plurality of lower-layer menu items, the CPU **621** promptly actives an application program corresponding to the menu item and makes a transition to the operation screen of the application program.

[**0524**] Menu items may be displayed in displaying the launcher screen, same as the accessory operation screen. When the third mode is selected in the launcher screen, menu items may be subjected to display control, same as the accessory operation screen, when the power is turned on.

[**0525**] As mentioned earlier, when the cursor is positioned on the menu item: accessory and a predetermined time has elapsed in a launcher screen, the CPU **621** executes display control of lower-menu items as described referring to **FIGS. 54A through 54G**. For example, in case the side controller **613** is pushed within a predetermined time, the CPU **621** may skip display control described referring to **FIGS. 54A through 54G** and promptly display the accessory operation screen shown in **FIG. 54G** on the liquid crystal panel **612**.

[**0526**] In this way, window frames are specified in the menu screen and menu items are gradually scaled up to appear in a window frame. This enhances the visibility. The menu items are positioned in a window frame. This enhances the visibility in selection of menu items thus upgrading the operability in cursor movement.

[**0527**] Menu items are gradually made crisper as they are scaled up. Thus the user can enjoy the display of menu items.

[**0528**] In a transition to a lower-layer menu screen, when a predetermined time has elapsed, the lower-layer menu items are gradually scaled up and are displayed in a window frame as mentioned earlier. Within the predetermined time, the lower-layer items are promptly displayed in a predetermined size without scaling up. The user can selectively use display control.

[**0529**] When the user is in a hurry, he/she can promptly display a lower-layer menu screen including lower-layer menu items in a predetermined size.

[**0530**] As mentioned above, according to the invention, window frames are specified in the menu screen and menu items are gradually scaled up and displayed in a window frame. This enhances the visibility and upgrades the operability in selection and activation of menu items.

Fourth Embodiment

[**0531**] Referring to **FIG. 55**, in the state where the third display mode is selected, oscillating the side controller **613**

causes the CPU **621** to display windows (focus sections) **641** as well as displays on the screen the menu items along a virtual curved surface having a predetermined curvature in accordance with the position of the windows **641**.

[**0532**] For example, assume that Mail, Browser, Address book, Schedule, Memo pad, File viewer, Accessory, and System as well as other applications A and B are provided as menu items and the items are displayed in the order of Mail, Browser, Address book, Schedule, Memo pad, File viewer, Accessory, System, and other applications A and B from the top in the window display section **634**, and seven menu items are displayed in the window display section **634**. Assume that the window (cursor) is positioned in location the menu item: mail is positioned (the window **641** is displayed in the uppermost position of the window display section **634**).

[**0533**] In this case, the CPU **621** specifies, in the first step, virtual curved surface extending at a predetermined curvature from the surface of the screen to the rear side (innermost area) in the window display section **634** with its lowermost opposition being the start point, then displays the menu item: Application B which is most distant from the mail in the lower area of the window display section **634** and sequentially displays Application A, Setting, System, Accessory, File viewer in the upward direction along the virtual curved surface.

[**0534**] As mentioned earlier, the virtual curved surface extends at a predetermined curvature from the surface of the screen to the rear side in the window display section **634** with its lowermost opposition being the start point, so that Application B is appears largest and the display size of a menu item is sequentially reduced in the upward direction in the screen.

[**0535**] For example, as shown in **FIG. 56**, along the surface of the virtual curved surface **651**, menu items (Mail, Browser, Address book, Schedule, Memo pad, File viewer, Accessory, System, and Setting) are arranged in predetermined intervals and the virtual curved surface **651** is rotated about the X axis. As a result, the menu item in the lowermost position (start point P) in the window display section **634** appears largest. The display size of a menu item is sequentially reduced in the upward direction in the screen.

[**0536**] File Viewer appears smallest on the screen and the menu items above File Viewer are hidden and are not displayed on the screen. In the example shown, this virtual curved surface has a curvature to allow six menu items to be displayed on the screen.

[**0537**] The above menu items moves on the virtual curved surface from top to bottom. In the second step shown in **FIG. 55**B, the menu item: System is in the lowermost position. In this state, the menu items System, Accessory, file viewer, Memo pad, and Schedule are displayed from the bottom in the window display section **634**.

[**0538**] In the third step, the CPU **621** puts up the virtual curved surface toward the screen surface with respect to the start point mentioned earlier. The CPU **621** performs as if to reduce the curvature of the virtual curved surface and put up the virtual curved surface toward the screen surface. As a result, as shown in **FIG. 55**C, the menu items above Schedule (Address book, Browser and Mail) are displayed in the window display section **634**.

[**0539**] In this practice, the virtual curved surface is gradually put up. Menu items in the upper area of the window display section **634** gradually increases their sizes and appear in the state shown in **FIG. 55D**. As the display size becomes larger, the menu items may be gradually displayed in a darker color.

[**0540**] In this way, the CPU **621** gradually decreases the curvature of the virtual curved surface and performs as if to put up the virtual curved surface toward the surface of the screen with respect to the start point, and finally reduces the curvature of the virtual curved surface to zero. That is, the virtual curved surface becomes a plane. As a result, in the fifth through eighth steps, as shown in **FIGS. 55E through 55H**, a menu item displayed in the upper area of the screen (for example Mail) changes its display position and increases its size as the virtual curved surface is put up. When the curvature of the virtual curved surface becomes zero, that is, when the virtual curved surface finally becomes a plane, the menu item: Mail is positioned in the window section **641**, as shown in **FIG. 53C**.

[**0541**] Then, oscillating the side controller **613** moves the windows **641** to move in the vertical direction. A push on the side controller **613** activates an application program corresponding to the menu item where the window **641** is positioned.

[**0542**] While the window **641** is in the position of the menu item: Mail in the foregoing example, that is, the window **641** is displayed in the uppermost position of the window display section **634**, the window **641** may be displayed in the position another menu item is finally located.

[**0543**] In this case also, the position most distant from the window **641** in the window display section **643** is assumed as a start point and a virtual curved surface is formed. As mentioned above, the curvature of the virtual curved surface is gradually reduced and the virtual curved surface is gradually put up toward the surface of the screen, until the curvature of the virtual curved surface reaches zero, meaning that the virtual curved surface is a plane.

[**0544**] As shown in **FIG. 53A** or **53**B, when menu items are displayed quasi-third-dimensionally, oscillating the side controller **613** may perform the display control mentioned above and enter the state shown in **FIG. 53C**.

[**0545**] The CPU **621** may perform the display control mentioned above in case the frequency of scroll operation is monitored and the frequency is below a predetermined value.

[**0546**] In this way, a predetermined point is assumed as a start point, and when a scroll operation is made, the menu items are gradually scaled up toward the start point on the surface of the screen from the innermost area of the screen. This enhances the visibility.

[**0547**] The start point is position on the surface of the screen and a virtual curved surface having a predetermined curvature is specified from the surface of the screen to the innermost area of the screen. When a scroll operation is made, menu items are moved along the surface of virtual curved surface and the curvature of the virtual curved surface is reduced with the scroll operation until the curvature of the virtual curved surface reaches zero, meaning that

the virtual curved surface is a virtual plane. This gives the user a joy of providing screen display.

[0548] While menu items as a plurality of items are arranged in a virtual plane in the example, the invention is not limited thereto. For example, a configuration is allowed where, a plurality of items are displayed in a predetermined size and, on a scroll operation, at least part of the plurality of items are gradually scaled up from a size smaller than the predetermined size to the predetermined size, or scaled up in stages and displayed, or scaled up to the predetermined size and displayed.

[0549] In this case, all items displayed on the screen may be uniformly scaled up or zoomed in each time a scroll operation is made.

[0550] This gives the user an image where all items show up against the innermost area of the screen each time a scroll operation is made, thus providing various on-screen representations.

[0551] Only part of all the items may be scaled up or zoomed in each time a scroll operation is made. In this case, for the items in the direction opposite to the scroll direction, for example a single item or approximately half of all the items, or an arbitrary number of items maybe subjected to scale-up or zoom-in display.

[0552] This gives the user an image where an item shows up against the innermost area of the screen each time a scroll operation is made, thus providing various on-screen representations.

[0553] While the upward/downward scroll is shown in the embodiments, a rightward/leftward scroll or a scroll of another form may be used.

[0554] The items displayed on the screen may be subjected to different scale-up display or zoom-in display depending on the scroll direction. In this case, for an upward/downward scroll, as an item is displayed in a higher position on the screen, magnification for scale-up/zoom-in display maybe higher while an item in the lower area of the screen may be subjected to scale-up/zoom-in display with smaller magnification, or may be displayed in the original size. In this case, for example, for a rightward/leftward scroll, an item closer to the right/left edge of the screen may be subjected to a higher magnification and an item in the center of the screen may be subjected to a lower magnification or displayed in the original size.

[0555] This gives the user an image where only the items in the upper/lower area of the screen show up against the innermost area of the screen or only the items in a specific position (for example center) of the screen show up against the innermost area of the screen, each time a scroll operation is made, thus providing various on-screen representations.

[0556] A configuration is allowed where a plurality of items are arranged in a virtual space and an image of the plurality of items reflected on a predetermined plane is displayed, and the above-mentioned scale-up or zoom-in display is provided by moving the items in the virtual space closer to the predetermined plane.

[0557] This gives the user an image where the items show up against the innermost area of the screen in a more real fashion than display by way of changing the size of the character fonts used for the items to be displayed.

[0558] A configuration is allowed where a plurality of items are arranged in a virtual space and an image of the plurality of items is shot with a virtual camera arranged in the same virtual space and then the above-mentioned scale-up or zoom-in display is provided by moving the items in the virtual space closer to the virtual camera, moving the virtual camera in the virtual space closer to the items, or moving the items and the virtual camera closer to each other in the virtual space. This gives the user an image where the items show up against the innermost area of the screen in a more real fashion than the above-mentioned projected image.

[0559] Arrangement of items or a camera in a virtual space, or shooting with a virtual camera may be executed by way of calculation processing by the CPU and memory in a portable information terminal, or may be calculated on other device and only the resulting image data may be displayed on the portable information terminal.

[0560] While scale-up display or zoom-in display is provided each time a scroll is made in the above example, the invention is not limited thereto.

[0561] Another embodiment is allowed where functional buttons for scroll operation are displayed on the screen. For example, see the scroll button in **FIG. 55**. While only the down-scroll button is shown in the figure, an up-scroll button should be displayed also if scroll is available in both upward and downward directions, same as the launcher screen in **FIG. 53**.

[0562] in an operation using the scroll button, the above scale-up or zoom-in display the above scale-up or zoom-in display may be provided in a scroll on a separate operation unit such as a side controller, without using the above scale-up or zoom-in display while the scroll button is operated.

[0563] With such a configuration, the user can selectively operate a scroll which accompanies the scale-up or zoom-in display, or a simple scroll. When wishing to quickly scroll through items, the user may instruct a simple scroll. When wishing to enjoy various screens while operating, the user may instruct a scroll accompanied by scale-up or zoom-in display, thus enhancing the operability.

[0564] Another embodiment is allowed where it is monitored whether scroll operations are successively performed in a predetermined time, instead of the monitoring of the frequency of scroll by way of a side controller by the CPU **621**, and in case scroll operations are not successively performed in the predetermined time, the above scale-up or zoom-in display (hereinafter simply referred to as display control) may be performed.

[0565] Whether the above scale-up or zoom-in display is to be performed is selected from the result of the monitor of the frequency or successive operations. When wishing to quickly scroll through items, the user may perform scroll display. Otherwise, the user may perform the above display control, thus enhancing the operability.

[0566] The above display control may be performed, only in case a plurality of items are scrolled, and a cursor is positioned on the item at the end of the list, or the item at the end of the list is displayed on the screen. In this case, for

example, in the example of **FIG. 55**, the item at the upper end of the list is an item of Schedule. **FIG. 55** does not illustrate the lowermost item. In case the lowermost item is displayed on the screen, the lowermost item is subjected to display control, unlike **FIG. 55** where the uppermost item is subjected to display control such as scale-up display and zoom-in display.

[**0567**] With this configuration, the user can recognize that a scroll is performed up to the item at the end of the list of items, from display control such as scale-up display and zoom-in display, thus enhancing operability.

[**0568**] In **FIG. 55**, the screen displays menu items as a plurality of items, for example, Schedule, Browse, Address book, and Schedule, as well as icons corresponding to the menu items to the left of these menu items. For these icons, various display control mentioned above will be performed as well as handling of items.

[**0569**] As mentioned hereabove, according to the invention, a predetermined point on the screen is assumed as a start point, and when a scroll operation is made, the menu items are gradually scaled up toward the start point on the surface of the screen from the innermost area of the screen. This enhances the visibility and operability in selection and activation of a menu item.

What is claimed is:

1. A display control device for performing display control, said display control device comprising:

virtual space setting means for setting a virtual space;

virtual face setting means for setting a virtual face in a predetermined plane in said virtual space;

display entity arrangement means for arranging a plurality of plane-shaped information display entities parallel with each other at least in a column so that the planes will differ from said predetermined plane;

camera setting means for setting a virtual camera whose line of sight is oriented to face said virtual face in said virtual space;

input means for inputting a scroll direction;

movement means for moving one or both of said virtual face and said virtual camera by way of said input means; and

control means for controlling the arrangement of said plurality of information entities on said virtual face so that a plane orthogonal to the line of sight of the virtual camera will be parallel with the planes of said plurality of information display entities in accordance with the movement by said movement means; characterized in that

said display control device performs information display by displaying, in whole or in part, the information display entities seen from said virtual camera among said plurality of information display entities.

2. A display control device for performing display control, said display control device comprising:

virtual space setting means for setting a virtual space in which are arranged a rotation axis, a virtual face comprising a locus of an arbitrary curve orthogonal to said rotation axis obtained when said curve moves in parallel with said rotation axis, and a plurality of plane-shaped information display entities parallel with each other;

display entity arrangement means for arranging said plurality of plane-shaped information display entities at least in a column so that an arbitrary line on said virtual face parallel with said rotation axis will be shared;

camera setting means for setting a virtual camera whose line of sight is oriented to face said virtual face;

input means for inputting a scroll direction; and

movement means for rotating one or both of said virtual face and said virtual camera about said rotation axis;

characterized in that said display control device performs information display by displaying, in whole or in part, the information display entities seen from said virtual camera among said plurality of information display entities.

3. A display control device for performing display control, said display control device comprising:

virtual space setting means for setting a virtual space;

virtual entity setting means for setting a body-of-rotation-shaped virtual entity;

display entity arrangement means for arranging a plurality of plane-shaped information display entities parallel with each other at least in a column on a virtual face as one face of said virtual entity;

camera setting means for setting a virtual camera whose line of sight is oriented to face said virtual face;

input means for inputting a scroll direction; and

movement means for rotating one or both of said virtual face and said virtual camera about said rotation axis of said virtual entity;

characterized in that said display control device performs information display by displaying, in whole or in part, the information display entities seen from said virtual camera among said plurality of information display entities.

4. A display control device according to claim 2 or **3**, characterized by further comprising control means for controlling the arrangement of said plurality of information display entities on said virtual face so that the so that a plane orthogonal to the line of sight of the virtual camera will be parallel with the plane of said plurality of information display entities in accordance with the movement by said movement means.

5. A display control device according to any one of claims **1** through **3**,

characterized by further comprising camera movement means for moving said virtual camera in said travel direction or in a direction opposite to the direction.

6. A display control device according to claim 5,

characterized in that, when moving said both, said movement means moves both at travel velocities different from each other.

7. A display control device according to claim 5,

characterized by further comprising line-of-sight direction change means for gradually changing the direction

of the line of sight of said virtual camera in accordance with the travel amount of said virtual camera by said camera movement means.

8. A display control device according to any one of claims **1** through **3**,

characterized by further comprising display change means for displaying at least one information display entity displayed in a predetermined position in the display of the display controller as an information display entity being a candidate for selection differently from other information display entities.

9. A display control device according to claim 8,

characterized by changing the display position of an information display entity as said candidate for selection in accordance with said movement by said movement means.

10. A display control device according to any one of claims **1** through **3**,

characterized by further comprising transparency setting means for setting the transparency of each information display entity in accordance with the distance between said virtual cameras and the information display entity.

11. A display control device according to claim 10,

characterized in that said transparency setting means reduces the transparency of an information display entity which is away from said virtual camera by a predetermined distance or more from said virtual camera.

12. A display control device according to claim 10, characterized in that said transparency setting means sets the transparency of said information display entity by changing the weight amount relative to a background and said information display entity displayed on the display control device.

13. A display control method for the display control device, said display control method comprising:

a virtual space setting step of setting a virtual space;

a virtual face setting step for setting a virtual face in a predetermined plane in said virtual space;

a display entity arrangement step of arranging a plurality of plane-shaped information display entities parallel with each other at least in a column so that the planes will differ from said predetermined plane;

a camera setting step for setting a virtual camera whose line of sight is oriented to face said virtual face;

an input step of inputting a scroll direction;

a movement step of moving one or both of said virtual face and said virtual camera by way of an input in said input step; and

a control step of controlling the arrangement of said plurality of information entities on said virtual face so that a plane orthogonal to the line of sight of the virtual camera will be parallel with the plane of said plurality of information display entities in accordance with the movement in said movement step;

characterized in that said display control method causes said display control device to perform information display by displaying, in whole or in part, the information the information display entities seen from said virtual camera among said plurality of information display entities.

14. A display control method for the display control device,

said display control method comprising:

a virtual space setting step of setting a virtual space in which are arranged a rotation axis, a virtual face comprising a locus of an arbitrary curve orthogonal to said rotation axis obtained when said curve moves in parallel with said rotation axis, and a plurality of plane-shaped information display entities parallel with each other;

a display entity arrangement step of arranging said plurality of plane-shaped information display entities at least in a column so that an arbitrary line on said virtual face parallel with said rotation axis will be shared;

a camera setting step of setting a virtual camera whose line of sight is oriented to face said virtual face;

an input step of inputting a scroll direction;

and a movement step of rotating one or both of said virtual face and said virtual camera about said rotation axis;

characterized in that said display control method causes said display control device to perform information display by displaying, in whole or in part, the information display entities seen from said virtual camera among said plurality of information display entities.

15. A display control method for the display control device,

said display control device comprising:

a virtual space setting step of setting a virtual space;

a virtual entity setting step of setting a body-of-rotation-shaped virtual entity in said virtual space;

a display entity arrangement step for arranging a plurality of plane-shaped information display entities parallel with each other at least in a column on a virtual face as one face of said virtual entity;

a camera setting step of setting a virtual camera whose line of sight is oriented to face said virtual face;

an input step of inputting a scroll direction; and

a movement step of rotating one or both of said virtual face and said virtual camera about said rotation axis of said virtual entity;

characterized in that said display control method causes said display control device to perform information display by displaying, in whole or in part, the information display entities seen from said virtual camera among said plurality of information display entities.

16. A display control method for a portable information terminal which displays a plurality of information display entities in a vertical line on the display section,

characterized in that said display control method comprises:

a size setting step of setting the size of an information display entity so that the size of the information display entity to be displayed will be gradually scaled down in accordance with the distance between the information display entity and a predetermined display position of said display;

an interval setting step of setting the display interval of information display entities to be displayed in accordance with the distance between each of the information display entities and said predetermined display position;

a transparency setting step of setting the transparency of an information display entity to be displayed in accordance with the distance between each of the information display entities and said predetermined display position; and

a scroll step of scrolling through said plurality of information display entities based on the setting in said size setting step, said interval setting step, and said transparency setting step.

17. A portable information terminal comprising a display section integral with a touch panel, said portable information terminal displaying, in whole or in part, the information display entities arranged in a predetermined arrangement in a predetermined display area of said display,

characterized in that said portable information terminal further comprises:

setting means for setting a position of a candidate for selection in said predetermined display area;

scroll means for scrolling through information display entities in case a drag operation is made; and

first determination means for determining as a candidate for selection the information display entity displayed in said position of a candidate for selection;

characterized in that a drag operation is available across said predetermined display area.

18. The invention provides a portable information terminal comprising a display section integral with a touch panel, said portable information terminal displaying, in whole or in part, a virtual face where a plurality of information display entities are arranged in a predetermined display area of said display,

characterized in that said portable information terminal further comprises:

setting means for setting a position of a candidate for selection in said predetermined display area; scroll means for scrolling through information display entities by moving at least either said virtual camera and said virtual face in case a drag operation is made; and first determination means for determining the information display entity displayed in said position of a candidate for selection as a candidate for selection;

characterized in that a drag operation is available across said predetermined display area.

19. A portable terminal device according to claim 18, characterized in that said virtual face is a curved surface.

20. A portable information terminal according to any one of claims **17** through **19**, characterized by further comprising:

storage means for storing a plurality of programs corresponding to, in whole or in part, said plurality of information display entities; and

activation means for activating a program corresponding to the information display entity determined as a candidate for selection by said first determination means, if any.

21. A portable information terminal according to any one of claims **17** through **19**,

characterized by further comprising:

storage means for storing a plurality of programs corresponding to, in whole or in part, said plurality of information display entities;

tap-out determination means for determining tap-out on said touch panel; and

activation means for automatically activating a program corresponding to the information display entity determined as a candidate for selection by said first determination means, if any, based on the tap-out determination by said tap-out determination means.

22. A portable information terminal according to claim 21,

characterized by further comprising second determination means for determining as a candidate for selection the information display entity displayed in the tap position instead of an information display entity determined as a candidate for selection by said first determination means.

23. A portable information terminal according to claim 22,

characterized in that, in case determination is made by said second determination means, said activation means activates a program corresponding to an information display entity determined as a candidate for selection by said second determination means, if any.

24. A portable information terminal according to any one of claims **17** through **19**, characterized in that said scroll means of said portable information terminal device gradually accelerates said scroll display in case the drag velocity of said drag operation exceeds a predetermined velocity.

25. A portable information terminal according to any one of claims **17** through **19**, characterized by further comprising:

target scroll amount setting means for setting a target scroll amount in accordance with the operation amount of said drag operation; and

target scroll amount change means for changing the target scroll amount determined by said target scroll amount setting means in accordance with the operation amount of said drag operation;

characterized in that said scroll means controls the scroll display velocity in accordance with the remaining scroll amount as a difference between the target scroll

amount changed by said target amount change means and the current scroll amount.

26. A display control method for causing, a portable information terminal comprising a display section integral with a touch panel, a drag operation being available across the predetermined display area of the display, to display, in whole or in part, the information display entities arranged in a predetermined arrangement in said predetermined display area,

characterized in that said method comprises:

a setting step of setting a position of a candidate for selection in said predetermined display area; a scroll step of scrolling through information display entities in case a drag operation is made; and

a first determination step of determining as a candidate for selection the information display entity displayed in said position of a candidate for selection.

27. The invention provides a display control method for causing, a portable information terminal comprising a display section integral with a touch panel, a drag operation being available across the predetermined display area of the display, to display, in whole or in part, a virtual face where a plurality of information display entities are arranged as seen from a virtual camera in said predetermined display area,

characterized in that said method comprises:

a setting step of setting a position of a candidate for selection in said predetermined display area;

a scroll step of scrolling through information display entities by moving said virtual camera in case a drag operation is made; and

a first determination step of determining the information display entity displayed in said position of a candidate for selection as a candidate for selection.

28. A display control device comprising: item display control means for displaying a plurality of items on an image display section;

window frame display control means for displaying a plurality of window frames in accordance with said plurality of items;

a first screen which can be displayed on said image display section including a first plurality of items;

a second screen which can be displayed on said image display section including a second plurality of items and said plurality of window frames, said second screen located in a lower layer than said first screen;

and screen display control means for selectively switching between said first screen and said second screen and displaying said first screen or said second screen on said image display section;

characterized in that, in switchover from said first screen to said second screen by said screen display control means, said item display control means makes display control by gradually scaling up said second plurality of items so as to position said items in said window frames corresponding to said items.

29. A display control device according to claim 28, comprising: first operation means and second operation means, both of said means instructing selective display between said first screen and said second screen by way of said image display control means,

characterized in that, in switchover from said first screen to said second screen by said operation means by way of said first screen display control means, said item display control means makes display control by gradually scaling up said second plurality of items so as to position said items in said window frames corresponding to said items, and that in switchover from said first screen to said second screen by said second operation means by way of said image display control means, said item display control means makes display control so as to promptly position said second plurality of items in said window frames corresponding to said items.

30. A display control device according to claim 28, comprising a switch section which is oscillatable or rotatable and can be pressed,

characterized in that said display control device selects an arbitrary item from said plurality of items in said first screen by way of oscillation or rotation of said switch section and that, by way of a push on said switch section, said image display means makes switchover from said first screen to said second screen as a lower-layer screen related to said selected item.

31. A display control program used for the display control device, said program comprising:

a step of displaying a first screen including a first plurality of items on an image display section;

a step of selecting an arbitrary item from said plurality of items in accordance with the oscillation or rotation of a switch section which is oscillatable or rotatable and can be pressed;

a step of determining said selected item by way of a push on said switch section;

a step of determining whether decision of an item is made by way of a push on said switch section within a predetermined period after selection of the item by way of oscillation or rotation of said switch section; and

a step of selectively performing display control of, in switching display from said first screen to said second screen as a lower-layer screen related to said selected item, said second screen including a second plurality of items and a plurality of window frames, gradually scaling up said second plurality of items in accordance with the determination in said determining step so as to position said items in said window frames corresponding to said items, or display control of promptly positioning said second plurality of items in said window frames corresponding to said items.

32. A display control device which can display at least partially a plurality of items on a display section, said display control device comprising

scroll display control means for scrolling said items on said display section in accordance with a scroll operation,

characterized in that said scroll display control means scales up the items in a direction opposite to the scroll direction of said scroll display among the items to be

displayed on said display, and displays the scaled-up items in accordance with said scroll operation.

33. A display control device which can display at least partially a plurality of items on a display section, said display control device comprising scroll display control means for displaying said plurality of items on said display section as well as scrolling said items rightward or leftward, or upward or downward on said display section in accordance with a scroll operation,

characterized in that said scroll display control means scales up at least partially the items to be displayed on said display section in a different fashion between said rightward, leftward, upward and downward scroll operations, and displays the scaled-up items

34. A display control device which can display at least partially a plurality of items on a display section, said display control device comprising

scroll display control means for displaying in a first size said plurality of items on said display section as well as scrolling said items on said display section in accordance with a scroll operation,

characterized in that said scroll display control means gradually scales up at least partially the items to be displayed on said display section from a size smaller than said first size to said first size and displays the scaled-up items in accordance with said scroll operation.

35. A display control device which can display on a display section an image of a plurality of items arranged in a virtual space, said plurality of items projected onto a predetermined plane, said display control device comprising

scroll display control means for scrolling said plurality of items on said display section by moving said plurality of items in said virtual space in accordance with a scroll operation,

characterized in that said scroll display control means scales up at least partially said plurality of items and displays the scaled-up items by moving said plurality of items in a position distant from said predetermined plane to a position close to said plane.

36. A display control device which can display an image of a plurality of items arranged in a virtual space, said plurality of items shot with a virtual camera arranged in the virtual space, said display control device comprises scroll display control means for scrolling on said display section at least either said plurality of items or said virtual camera by moving at least either said plurality of items or said virtual camera in said virtual space,

characterized in that said scroll display control means scales up at least partially said plurality of items and displays the scaled-up items by moving at least either part of said plurality of items or said virtual camera so that the distance between said plurality of items and said virtual camera will be reduced.

* * * * *