US006091717A

United States Patent [19]

Honkasalo et al.

[11] **Patent Number: 6,091,717**

[45] **Date of Patent: *Jul. 18, 2000**

[54] **METHOD FOR SCHEDULING PACKET DATA TRANSMISSION**

[75] Inventors: **Zhi-Chun Honkasalo**, Bedford, Tex.; **Pasi Liimatainen**, Ruutana, Finland; **Sona Kapadia**, San Diego; **John Noneman**, Valley Center, both of Calif.

[73] Assignee: **Nokia Mobile Phones Limited**, Espoo, Finland

[*] Notice: This patent issued on a continued prosecution application filed under 37 CFR 1.53(d), and is subject to the twenty year patent term provisions of 35 U.S.C. 154(a)(2).

[21] Appl. No.: **08/851,368**

[22] Filed: **May 5, 1997**

[51] **Int. Cl.**[7] **H04Q 7/00**; H04J 3/24

[52] **U.S. Cl.** **370/329**; 370/349

[58] **Field of Search** 370/312, 318, 370/320, 322, 324, 328, 329, 331, 332, 335, 338, 348, 349; 375/200, 202

[56] **References Cited**

U.S. PATENT DOCUMENTS

5,257,257	10/1993	Chen et al.	370/18
5,267,261	11/1993	Blakeney, II et al.	370/331
5,373,503	12/1994	Chen	375/200
5,436,905	7/1995	Li et al.	370/331
5,519,706	5/1996	Bantz et al.	370/331
5,640,395	6/1997	Hamalainen et al.	370/322
5,644,576	7/1997	Bauchot et al.	375/202
5,666,348	9/1997	Thornberg et al.	370/322
5,697,055	12/1997	Gilhousen et al.	370/331
5,742,588	4/1998	Thornberg et al.	370/329
5,774,461	6/1998	Hyden et al.	370/329
5,787,080	7/1998	Hulyalkar et al.	370/348
5,828,662	10/1998	Jalali et al.	370/335

FOREIGN PATENT DOCUMENTS

2 270 815	3/1994	United Kingdom .
WO 94/10767	5/1994	WIPO .

OTHER PUBLICATIONS

DeVile, J.M., A Reservation Based Multiple Access Scheme For a Future Universal Mobile Telecommunications System:, IEE, Dec, 15, 1993, Conference Publication No. 387 pp. 210–215.

Ziegler, Robert A., "An Experimental Implentation of the PRMA Protocol for Wireless Communication", 43rd IEEE, Vehicular Technology Conference, 1993, pp. 909–912.

Primary Examiner—Min Jung
Assistant Examiner—Chiho Andrew Lee
Attorney, Agent, or Firm—Harry F. Smith; Brian T. Rivers

[57] **ABSTRACT**

In a packet data transmission and reception system a media access control (MAC) message is broadcast by a base station to a plurality of mobile stations. The MAC message contains packet data transmission scheduling information which allows the base station to preemptively control mobile station access to traffic channels in order to maximize the efficiency of packet data transmissions and allow scheduling consideration including priority access, quality of service and maximum bytes per transfer. The MAC message consists of a control frame structure which comprises scheduling parameters including MAC IDs fields, activity fields, and a field representing the number of free traffic channels in a cell. These parameters enable multiple mobile stations to share, in a time multiplexed fashion, traffic channels for packet data transmission on CDMA based mobile communication systems.

19 Claims, 7 Drawing Sheets

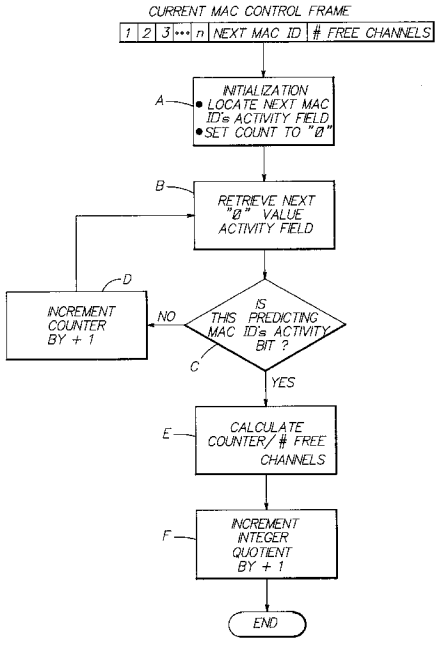

FIG. 1

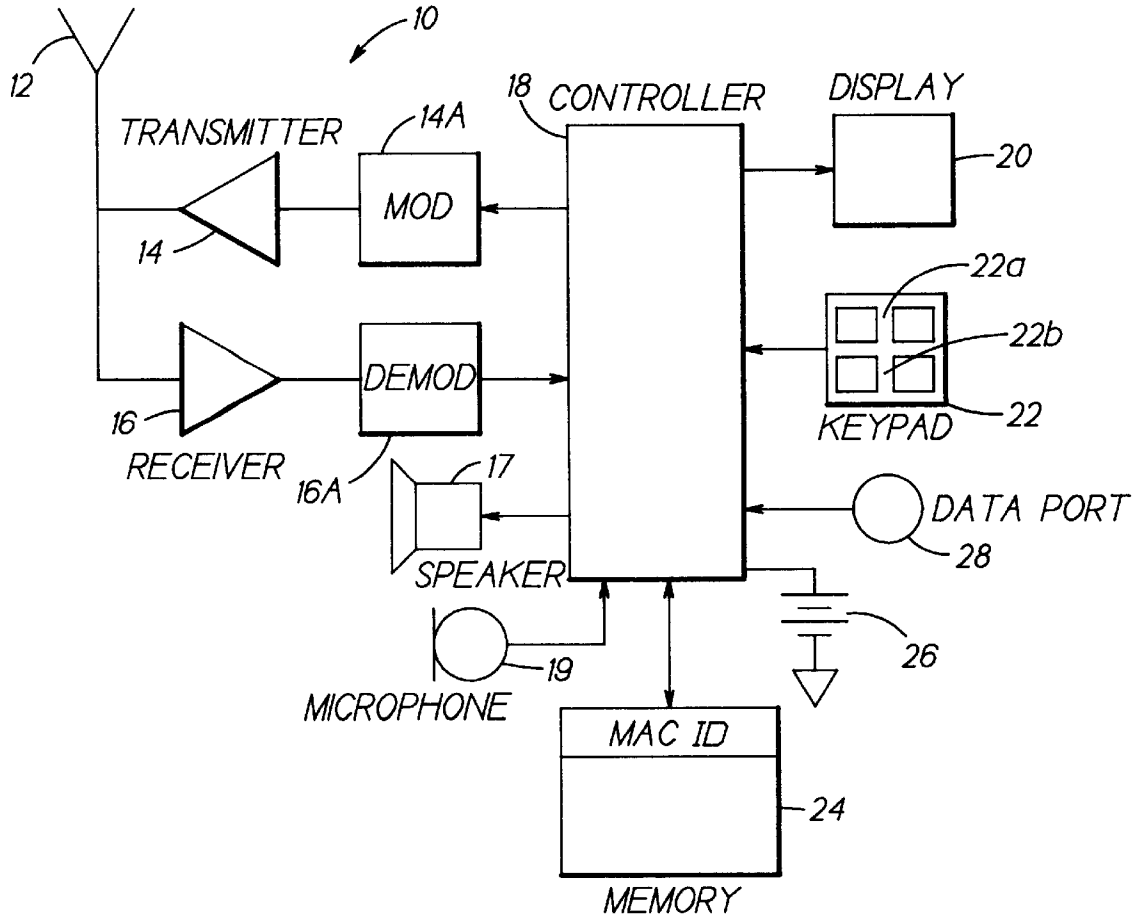
10
12
TRANSMITTER
14A
MOD
14
18
CONTROLLER
DISPLAY
20
22a
22b
22
KEYPAD
DEMOD
16
RECEIVER
16A
17
SPEAKER
DATA PORT
28
26
19
MICROPHONE
MAC ID
24
MEMORY

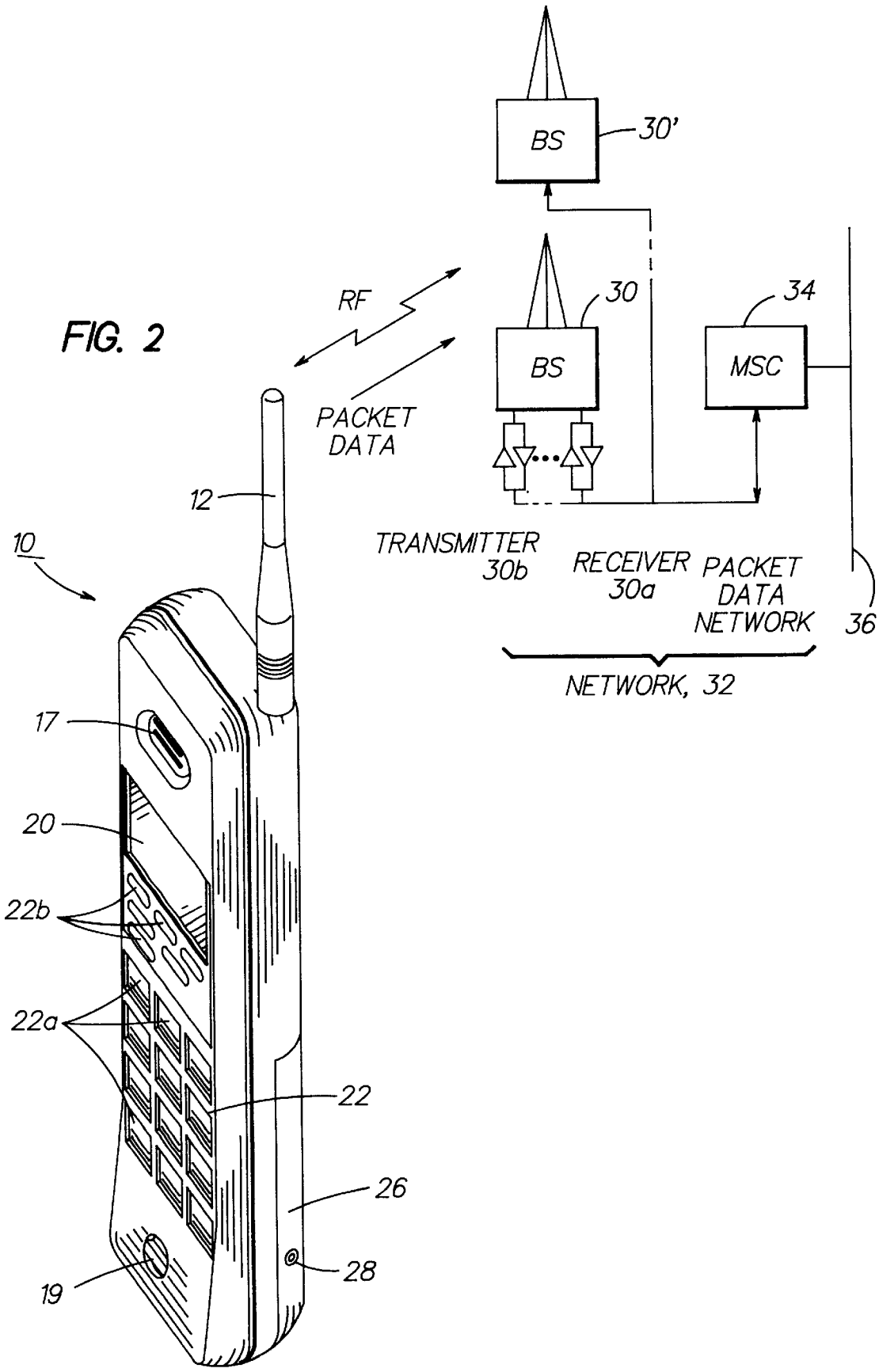
FIG. 2
BS
30'
RF
30
34
BS
MSC
PACKET
DATA
12
10
TRANSMITTER
30b
RECEIVER
30a
PACKET
DATA
NETWORK
36
NETWORK, 32
17
20
22b
22a
22
26
28
19

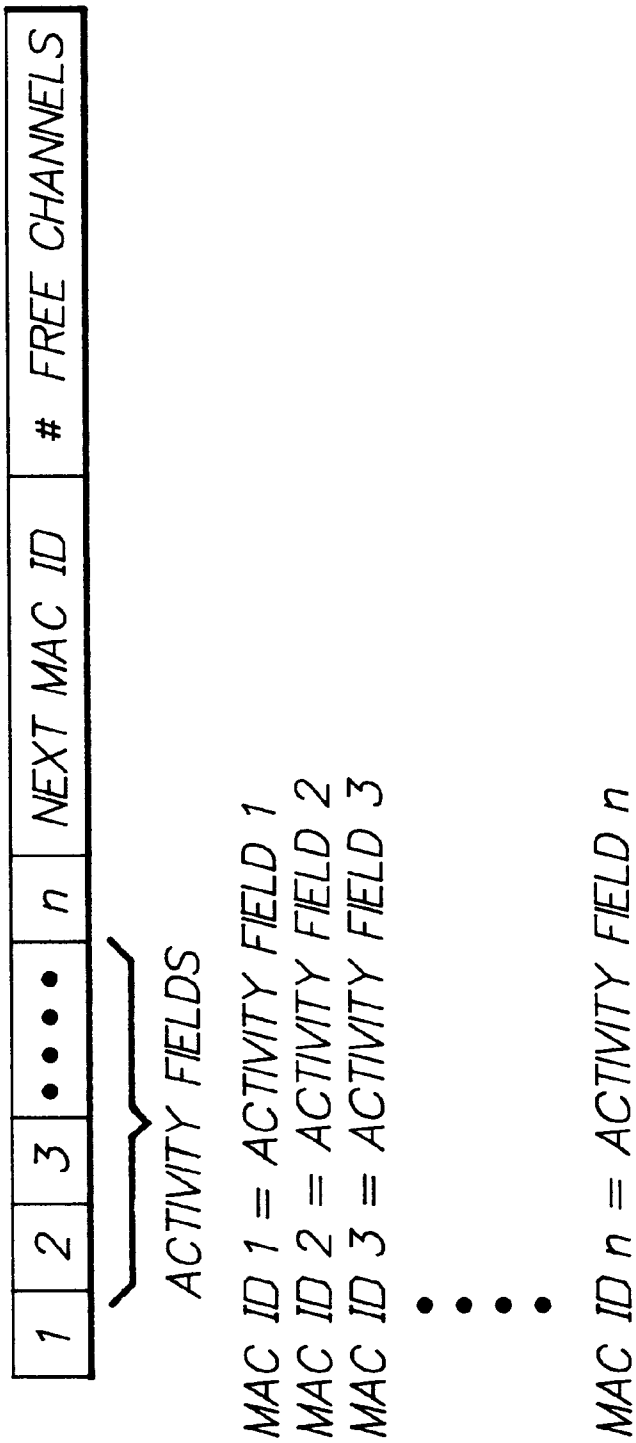
1
2
3
n
NEXT MAC ID
FREE CHANNELS
ACTIVITY FIELDS
MAC ID 1 = ACTIVITY FIELD 1
MAC ID 2 = ACTIVITY FIELD 2
MAC ID 3 = ACTIVITY FIELD 3
MAC ID n = ACTIVITY FIELD n

FIG. 3A

FIG. 3B

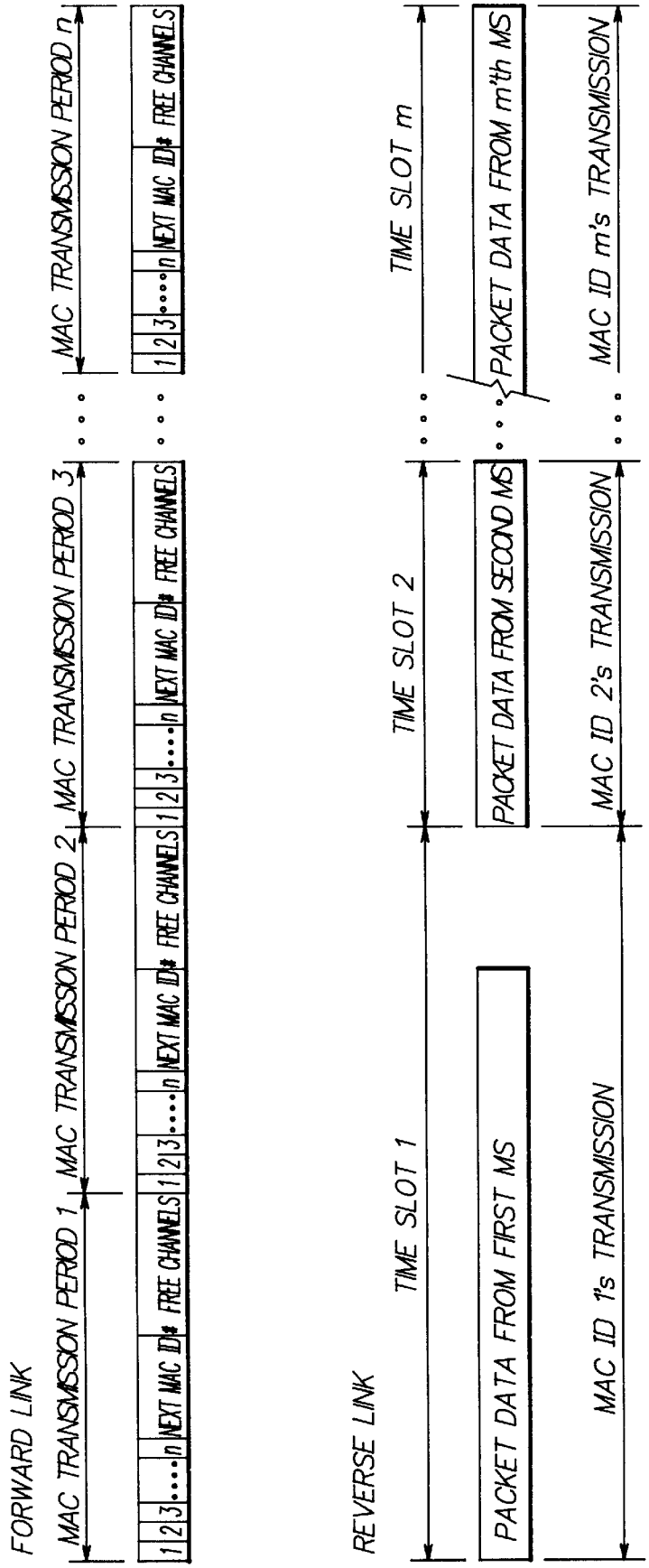
FORWARD LINK
MAC TRANSMISSION PERIOD 1
MAC TRANSMISSION PERIOD 2
MAC TRANSMISSION PERIOD 3
MAC TRANSMISSION PERIOD n
1 2 3 ... n NEXT MAC ID# FREE CHANNELS
REVERSE LINK
TIME SLOT 1
TIME SLOT 2
TIME SLOT m
PACKET DATA FROM FIRST MS
PACKET DATA FROM SECOND MS
PACKET DATA FROM m'th MS
MAC ID 1's TRANSMISSION
MAC ID 2's TRANSMISSION
MAC ID m's TRANSMISSION

FIG. 4

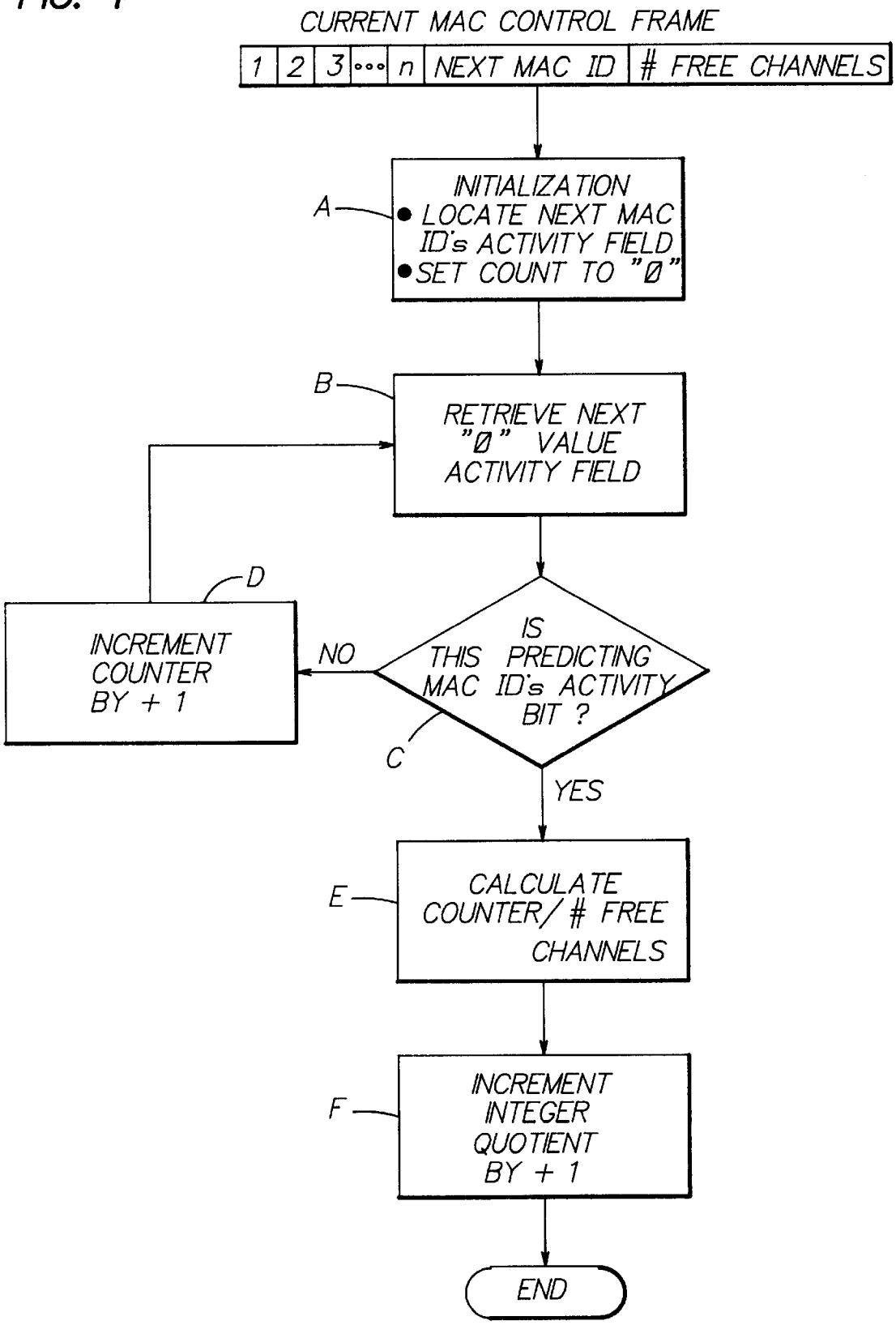
CURRENT MAC CONTROL FRAME
1
2
3
...
n
NEXT MAC ID
FREE CHANNELS
A
INITIALIZATION
• LOCATE NEXT MAC ID's ACTIVITY FIELD
• SET COUNT TO "Ø"
B
RETRIEVE NEXT "Ø" VALUE ACTIVITY FIELD
D
INCREMENT COUNTER BY + 1
NO
IS THIS PREDICTING MAC ID's ACTIVITY BIT ?
C
YES
E
CALCULATE COUNTER/# FREE CHANNELS
F
INCREMENT INTEGER QUOTIENT BY + 1
END

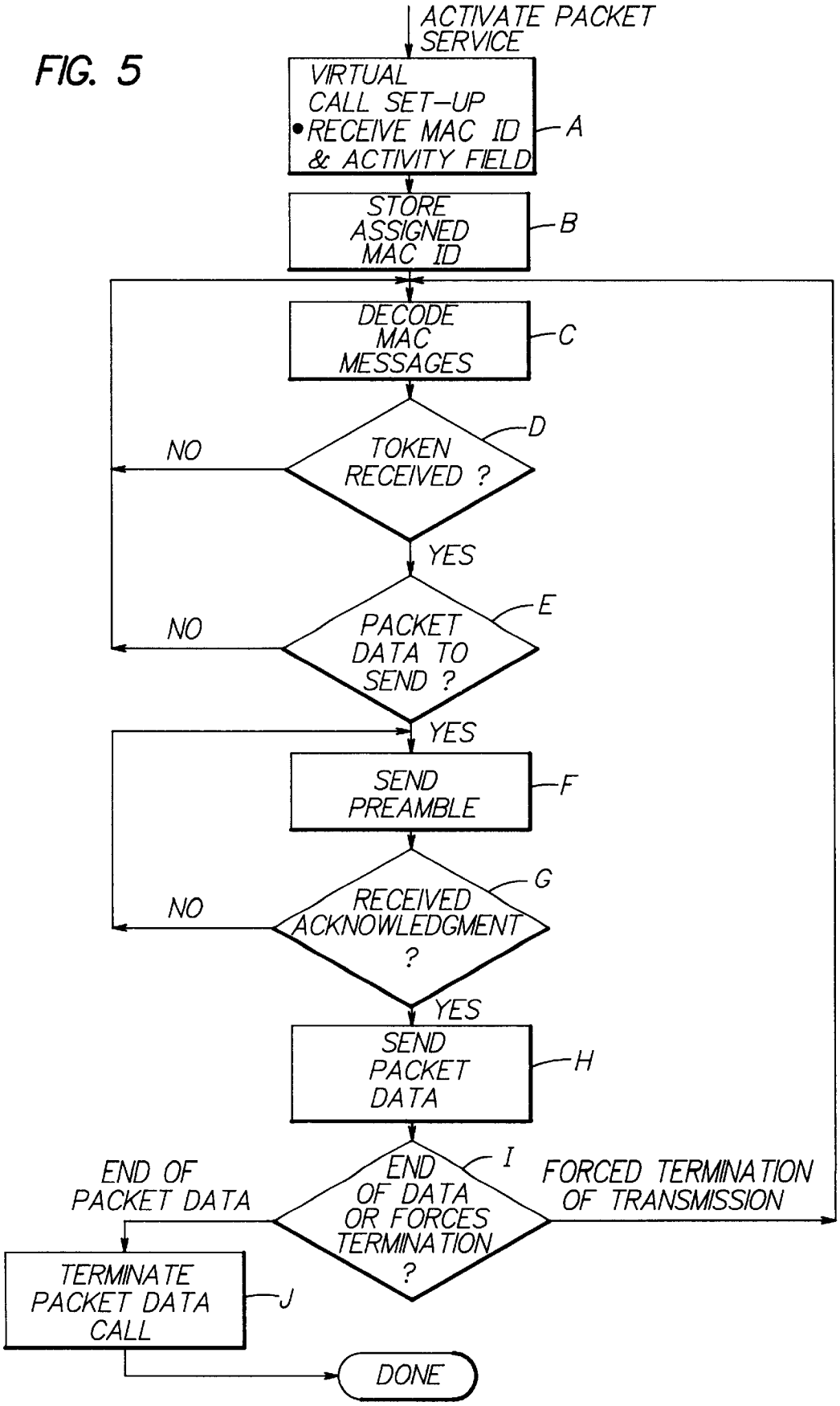
FIG. 5
ACTIVATE PACKET SERVICE
VIRTUAL CALL SET-UP
• RECEIVE MAC ID & ACTIVITY FIELD
A
STORE ASSIGNED MAC ID
B
DECODE MAC MESSAGES
C
TOKEN RECEIVED ?
D
NO
YES
PACKET DATA TO SEND ?
E
NO
YES
SEND PREAMBLE
F
RECEIVED ACKNOWLEDGMENT ?
G
NO
YES
SEND PACKET DATA
H
END OF DATA OR FORCES TERMINATION ?
I
END OF PACKET DATA
FORCED TERMINATION OF TRANSMISSION
TERMINATE PACKET DATA CALL
J
DONE

FIG. 6

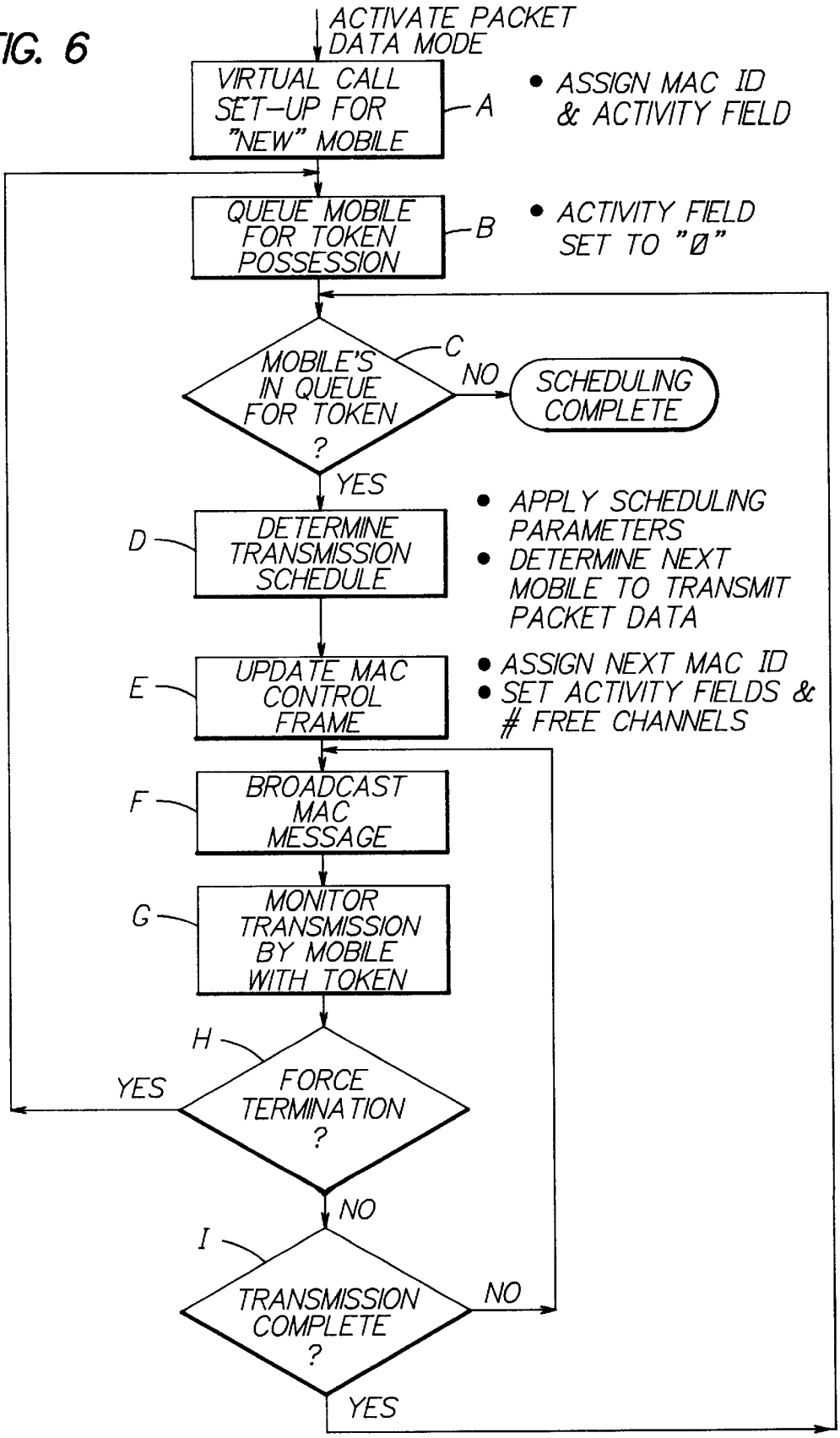
ACTIVATE PACKET DATA MODE
VIRTUAL CALL SET-UP FOR "NEW" MOBILE
A
• ASSIGN MAC ID & ACTIVITY FIELD
QUEUE MOBILE FOR TOKEN POSSESSION
B
• ACTIVITY FIELD SET TO "Ø"
MOBILE'S IN QUEUE FOR TOKEN ?
C
NO
SCHEDULING COMPLETE
YES
DETERMINE TRANSMISSION SCHEDULE
D
• APPLY SCHEDULING PARAMETERS
• DETERMINE NEXT MOBILE TO TRANSMIT PACKET DATA
UPDATE MAC CONTROL FRAME
E
• ASSIGN NEXT MAC ID
• SET ACTIVITY FIELDS & # FREE CHANNELS
BROADCAST MAC MESSAGE
F
MONITOR TRANSMISSION BY MOBILE WITH TOKEN
G
H
FORCE TERMINATION ?
YES
NO
I
TRANSMISSION COMPLETE ?
NO
YES

METHOD FOR SCHEDULING PACKET DATA TRANSMISSION

BACKGROUND OF THE INVENTION

1. Field of the Invention

This invention relates to cellular telephone network data transmission, specifically to a method of scheduling packet data transmission for a connection-less packet service.

2. Prior Art

Packet data communication is known in cellular telephone systems, as is evidenced by, for example, commonly assigned U.S. Pat. No. 5,257,257, issued Oct. 26, 1993, entitled "Method of Controlling the Operation of a Packet Switched CDMA Communication Network for Controlling the Operation of Transmitters and Receivers", by X. H. Chen and J. Oksman.

One further example is defined in TIA/EIA/IS-657, Packet Data Service Option for Wideband Spread Spectrum Cellular System. IS-657 is used along with TIA/EIA/IS-95A, Mobile Station-Base Station Compatibility Standard for Dual-Mode Wideband Spread Spectrum Cellular System, and, TIA/EIA/IS-99 Data Services Option Standard for Wideband Spread Spectrum Digital Cellular System. The current IS-657 based packet data scheme for code division multiple access (CDMA) does not allow the traffic channel to be shared between more than one user. The IS-657 scheme is based on a make-and-break of multiple traffic channel connections during the life of a packet data session. In the worst case, a packet may suffer a call set-up delay which can range from tens of milliseconds to a few seconds. Also, it is possible for a mobile station (MS) to transmit idle (eighth rate) frames for a user defined time if there are no packets to send. This results in wasted bandwidth, especially in high-speed data systems, because the traffic channel capacity is reserved for this user and cannot be utilized by any other user. Thus, an access scheme that allows two or more users to share traffic channels, and allows the network to control the packet delay is needed.

In connection-less packet data transmission in mobile communication systems, discrete packets are transmitted on a packet-basis, that is, no dedicated end-to-end connection is set up. Sharing of traffic channels in connection-less packet data transmission has generally been supported via random access or random reservation media access control (MAC) protocols. Under these MAC protocols, multiple mobile stations compete for traffic channels in order to receive packet data service from a base station (BS). The number of available traffic channels for packet service within a cell is defined by the BS.

Random reservation protocols are generally believed to offer high channel utilization. However, in a CDMA based system that is approaching the system's maximum capacity, random access attempts are more likely to be unsuccessful due to higher interference levels. Thus, as a cell approaches its maximum capacity of available traffic channels, multiple MSs compete for fewer and fewer available traffic channels. This normally leads to even further access attempts by the MSs. Often, the random attempts themselves increase the communications load in the cell and reduce traffic channel capacity.

OBJECTS AND ADVANTAGES OF THE INVENTION

It is a first object and advantage of this invention to provide an efficient method for transmitting packet data over

a cellular communication network that overcomes the foregoing and other problems.

Another object and advantage of this invention is to maintain scheduled traffic channel sharing among multiple packet data users who are attached to a cell of a mobile communication network.

Another object and advantage of this invention is to provide the base station of a cellular communication network with control- over which mobile station(s) may attempt access to the system during a specified period of time.

Another object and advantage of this invention is to provide the base station of a cellular communication network the ability to preemptively control priority and duration of mobile station access by employing a scheduling method which considers one or more parameters including priority access service, quality of service, and a maximum number of bytes per transmission.

SUMMARY OF THE INVENTION

The foregoing and other problems are overcome and the objects of the invention are realized by methods and apparatus in accordance with embodiments of this invention. More particularly, this invention is directed to solving the problem of inefficient packet data transmission in CDMA based mobile communication systems.

Scheduled packet access, as taught by this invention, leads to more stable load conditions, offers higher channel utilization, and enables determination and control of a maximum delay in packet data transmission experienced by users. According to the teachings of this invention, the BS divides access to the traffic channel(s) allocated for packet data services into time slots. The right to access a given traffic channel for a specific time slot is referred to as a packet token, hereinafter simply a token. One or more token(s) are allocated to the MSs from time slot to time slot, in a pre-defined manner. The token allocation schedule is determined at the BS, which may employ a variety of schemes to determine how the token is assigned. This pre-defined, scheduled token allocation is distinguishable over conventional random access and random reservation protocols. Token allocation, as taught by this invention, is accomplished by granting transmission access to an available traffic channel to each packet data MS in the cell according to specific, scheduled time intervals. This scheduled approach allows the BS to preemptively control traffic channel access among packet data MSs. Random access protocols, on the other hand, allow access to an available traffic channel as a packet data MS requests it. Thus, the conventional random protocols employ a first-come-first-serve method of traffic channel access assignment.

Allocating the right to access an available traffic channel may not always result in a transmission from the packet data MS. If, at the end of a time slot, the BS has not received a valid transmission from the MS(s) who are allocated the token(s), either because the MS has nothing to send or an access preamble did not reach the BS successfully, then the BS allocates the token to the next MS(s) in the cell. In this way, the MSs share the packet traffic channels in a time-multiplexed fashion, and the BS schedules and controls the allocation of the traffic channels at all times. This technique eliminates the problems associated with conventional MS random access attempts to gain a traffic channel for transmitting a packet.

This invention preferably employs a technique in which a BS transmits at least one dedicated MAC channel on the

forward link. When transmitting the MAC channel messages to a specific MS the BS may use a permuted electronic serial number (ESN) of the MS as a long code mask, and when broadcasting MAC channel messages to all MSs within a cell the BS preferably uses a public long code mask. The MAC channel messages convey packet data traffic channel information and status information on the allocation of the token(s) to packet mobile stations in the cell. The MAC channel messages are updated to reflect the latest token usage. By decoding the latest MAC channel message a MS evaluates who has the token(s) for the next time slot, and is able to predict when it should next be allocated the token from the BS. The MS holding a token may attempt to access the traffic channel if it has data to send. The MS preferably uses its own private long code for reverse link transmission, as the BS expects a preamble signal from the MS(s) currently holding a token. Every packet traffic channel has a pre-defined Walsh code associated on the forward link to which the MS listens to determine whether its access was successful. After an access acknowledgement is received from the BS, the MS terminates the preamble and starts to transmit its packet data. At this point, the MS may negotiate the traffic channel data rate with the BS. The initial traffic channel data rate is pre-defined by a Service Option and may be as low as a predefined low speed data service, such as 9.6 kpbs.

Once occupied, the traffic channel is preferably allocated to that MS until the end of the packet. The maximum time a MS is allowed to occupy a channel is predefined by the network, so that the BS can predict worst case channel usage. The BS may employ various techniques to ensure efficient channel usage. For example, when assigning a token, the BS may define a maximum number of bytes that a MS may transmit. If this maximum number of bytes per transmission is exceeded, the BS has the option to terminate a packet transmission by sending a transmission stop bit on the associated forward link traffic channel. If the transmission is stopped, the MS relinquishes the token at the next time slot and rejoins the pool of MSs awaiting the next available token. Similarly, if the transmission of packet data completes the MS yields the token at the next time slot. These techniques for monitoring transmissions may be based on equal sharing between MSs, or allow for different priorities of transmission which depend on the quality of service selected.

In accordance with the present invention, the BS allows the MS to turn off its receiver and save power during the periods when the MS does not hold the token. If the MS does shut down its processing between tokens the BS informs the MS, before the MS shuts down, when it should start its processing again, i.e. when the MS will be allocated the token again. This notification by the BS before the MS shuts down is possible as the token is assigned in advance. Thus, a "dynamic slotted mode" operation is provided, the operation being dynamic in that the position of the slot need not be the same in every cycle. The slot position is a function of how many active MSs are on the channel, and on how much data each MS can transmit. Additionally, the number of slots is a function of the number of available channels at the BS.

The BS may transmit packets destined for a MS, if any, or fill data, on the forward link at the same time that the MS is allocated a token and is transmitting packets on the reverse link. This allows the BS to send power control information to the MS.

BRIEF DESCRIPTION OF THE DRAWINGS

The above set forth and other features of the invention are made more apparent in the ensuing Detailed Description of the Invention when read in conjunction with the attached Drawings, wherein:

FIG. **1** is a block diagram of a cellular terminal that is suitable for practicing this invention;

FIG. **2** depicts the terminal of FIG. **1** in communication with a CDMA cellular network;

FIG. **3**A is a pictorial representation of a media access control (MAC) channel frame structure employed, in accordance with the invention, by the BS to broadcast packet data traffic channel information and token allocation information to each MS;

FIG. **3**B is a pictorial representation of the Forward Link BS MAC Transmissions in relation to the Reverse Link MS Transmission Time Slots;

FIG. **4** is a logic flow diagram, according to the invention, for a MS to predict its next allocation of a token;

FIG. **5** is a state flow diagram, according to the invention, for MS packet operation; and

FIG. **6** is a state flow diagram, according to the invention, for BS packet operation.

DETAILED DESCRIPTION OF THE INVENTION

Reference is first made to FIGS. **1** and **2** for illustrating a wireless user terminal or mobile station (MS) **10**, such as but not limited to a cellular radiotelephone or a personal communicator, that is suitable for practicing this invention. The MS **10** includes an antenna **12** for transmitting signals to and for receiving signals from a base site or base station (BS) **30**. The BS **30** is a part of a cellular network **32** that includes a mobile switching center (MSC) **34**, and a plurality of additional BSs, such as BS **30'**. Each BS, for example BS **30**, services an associated cell within the network **32** and is assumed to include a plurality of receivers **30***a* and transmitters **30***b*, some of which can be allocated for packet data services. The MSC **34** provides a connection to landline trunks when the mobile station **10** is involved in a call. It is assumed for the purposes of this invention that the network **32** supports packet data service. For example, the network **32** may be coupled to a packet data network **36** such as the internet, and/or to a LAN or WAN.

The mobile station includes a modulator (MOD) **14**A, a transmitter **14**, a receiver **16**, a demodulator (DEMOD) **16**A, and a controller **18** that provides signals to and receives signals from the transmitter **14** and receiver **16**, respectively. These signals include signalling information in accordance with the air interface standard of the applicable cellular system, and also user speech and/or user generated data. The air interface standard is assumed for this invention to include a capability to convey packet data.

In the presently preferred embodiment of this invention the modulator **14**A, transmitter **14**, receiver **16**, and demodulator **16**A are adapted to operate with a code division multiple access (CDMA) system, such as one specified in IS-95A. The teaching of this invention is not, however, limited for use with only this type of system, but may be employed with a number of different types of systems having different modulation and access characteristics, such as time division, multiple access (TDMA) systems.

It is understood that the controller **18** also includes the circuitry required for implementing the audio and logic functions of the mobile station. By example, the controller **18** may be comprised of a digital signal processor device, a microprocessor device, and various analog to digital converters, digital to analog converters, and other support

circuits. The control and signal processing functions of the mobile station are allocated between these devices according to their respective capabilities.

The mobile station **10** may be capable of voice transmissions also, and thus can include a user interface comprised of a conventional earphone or speaker **17**, a conventional microphone **19**, a display **20**, and a user input device, typically a keypad **22**, all of which are coupled to the controller **18**. The keypad **22** includes the conventional numeric (0–9) and related keys (#,*) **22***a*, and other keys **22***b* used for operating the mobile station **10**. These other keys **22***b* may include, by example, a SEND key, various menu scrolling and soft keys, and a PWR key. The mobile station **10** may also include a battery **26** for powering the various circuits that are required to operate the mobile station.

It should be realized that in other embodiments the mobile station **10** may function only as a data terminal for at least one of transmitting or receiving packet data. The mobile station **10** which functions as a data terminal can include a data port **28** which is coupled to the controller **18**. As a data terminal, certain of the user interface components described above may not be included. It should also be appreciated that in some embodiments the mobile station **10** may not be mobile at all, but may be operated at a fixed location (for example, as a component of a wireless facsimile machine in an office environment).

The mobile station **10** also includes various memories, shown collectively as the memory **24**, wherein are stored a plurality of constants and variables that are used by the controller **18** during the operation of the mobile station. For example, the memory **24** may store the values of various cellular system parameters and the number assignment module (NAM). An operating program for controlling the operation of controller **18** is also stored in the memory **24** (typically in a ROM device). The memory **24** may also store packet data prior to transmission or after reception. The memory **24** includes routines for implementing the methods described below in relation to FIGS. **4**, **5** and **6**.

Packet data service options provide a mechanism of establishing and maintaining traffic channels for packet data service. A packet data service option is negotiated during call origination or at a later time during a call. The details of establishing packet data service can be found in, by example, IS-95A, IS-657, and IS-99.

In accordance with this invention, the call origination messages are modified from the definitions in the above mentioned standards to include a MAC channel frame structure as shown in FIG. **3**A. The MAC channel frame structure is broadcast by the BS **30** to all MSs **10** within the cell at regular intervals of time, referred to as a MAC transmission period. The BS **30** divides access to the traffic channel(s) allocated for packet data services according to time slots. A time slot is defined as the time period required for a MS to transmit all or some of its packet data. A time slot is limited to the maximum transmission time set by the BS **30**. Time slots may be of unequal duration, as each time slot's duration can be defined by the amount of packet data a MS **10** is transmitting, up to a maximum transmission time. Additionally, one or more MAC transmission periods may elapse within a time slot, however, each time slot has a duration that is a whole multiple of the duration of the MAC transmission period. The relationship between time slots and MAC transmission periods is illustrated in FIG. **3**B. In essence, the time slot represents a given period of time in which a MS **10** has the right to access a traffic channel. The MS **10** that is allocated this access right is allocated a token. The MAC channel frame structure contains various fields that are used by the BS **30** to schedule traffic channel access, i.e. token allocation. As is shown in FIG. **3**B, a portion of an assigned time slot may be unused by a MS **10**.

The MAC channel frame structure includes a plurality of one bit wide fields, 1 to n. These fields are referred to as "activity" fields. Each activity field defines the status of a corresponding MS **10**, and may have a value of either zero ("0") or one ("1"). A field value of zero indicates that the corresponding MS **10** has not been assigned to a traffic channel by the BS **30**. A field value of one indicates that either the MS has been assigned to receiver hardware in the BS **30**, or that the activity field is not currently assigned to any MS within the cell. In the preferred embodiment the activity field is a one bit wide field, however, a field width of more than one bit may be used for conveying the activity status information of one or more MSs **10**.

Additionally, each activity field corresponds to a temporary identification number that is assigned by the BS **30** to the MSs **10** for purposes of media access control. These temporary identification numbers are referred to as MAC IDs. The BS **30** allocates a different MAC ID, and hence a different corresponding activity field, to each MS **10** within the cell. A MAC ID is valid for the BS **30** that assigns it, and multiple BSs **30** may each assign different MAC IDs to the MS **10** in order to support virtual "soft handoff". Thus, each packet may be routed via a different BS **30**, but never via more than one BS for one packet, depending on the signal condition to/from that BS. The virtual soft handoff is preferably mobile-assisted and is based on the pilot signal condition seen by the MS **10**, in the similar manner as in conventional soft handoff procedures.

According to the embodiments of this invention, the virtual soft handoff procedure differs from conventional soft handoff procedures. In conventional soft handoff procedures, the traffic channel is handoff from a first BS to a second BS. In accordance with this invention, the mobile station's monitoring of the MAC channel is handoff from the MAC channel of the first BS **30** to the independent MAC channel of the second BS **30'**. In other words, the MS **10** is first receiving MAC information from the MAC channel of the first BS **30**. At some point, the MS **10** will be receiving the MAC channel of the first BS **30** as well as the MAC channel of the second BS **30'**. Because token allocation and scheduling information is maintained within the MAC information the MS may receive a token from either BS **30** or **30'** and transmit to that BS during the virtual soft handoff process. Once a token is received it is held until transmission is completed. For example, a token received from the first BS **30** does not give the MS **10** the right to transmit to the second BS **30'**. Additionally, there may be an occurrence when a token is simultaneously offered by both BSs, **30** and **30'**, servicing the MS **10**. In this event, the MS **10** preferably accepts the token that is allocated by the "best" quality channel (e.g. lowest bit error rate or frame error rate) and transmits the packet data to the associated BS **30** or **30'**. When the pilot signal of the first BS **30** drops below a predetermined level the MS **10** drops the MAC channel of the first BS **30** and monitors only the MAC channel of the second BS **30'**. After the MS **10** drops the first BS **30**, the first BS **30** is free to reassign the MAC ID it previously assigned to the MS **10**.

Because every packet MS **10** has its own MAC ID the total number of required MAC IDs could become excessively large for a large cell. Therefore, packet users may be divided into MAC sub-groups, and MAC ID numbers can be re-used within the sub-groups of different channels.

MAC IDs are preferably allocated by the BSs **30** during a "virtual call set-up" procedure. The BS **30** that performs the virtual connection is preferably the BS from which the MS **10** receives the strongest pilot signal. This invention assumes that the interworking function (IWF) that has been established with a fixed packet data network, e.g. internet, resides in the mobile network, not at the first BS where the MS sets up the virtual connection. That is, the IWF in the MSC **34** is connected to two or more BSs.

The MAC channel frame structure also includes a Next MAC ID field. This field is an n-bit wide field, where n represents a number of bits which can accommodate the maximum allowable width of the MAC ID field. The Next MAC ID field indicates which MS(s) **10** are allowed to transmit data during the next time slot, i.e. who will have the next token. The Next MAC ID field is sent in each MAC frame message. As a result, if any MSs **10** miss one or more MAC frames they are enabled to quickly determine the access token rotation.

Lastly, the MAC channel frame structure includes a #Free Channels field. This field is an m-bit wide field, where m represents a number of bits which can accommodate an integer that indicates the maximum number of traffic channels within a BS that are allocated for packet data transmission. The value of the #Free Channels field indicates the number of currently available traffic channels in the BS **30** in a given time slot.

In accordance with this invention, and referring to FIGS. **3**A and **4**, a MS **10** evaluates the fields within the MAC channel frame structure and predicts when it will be allocated a token. A MS **10** accomplishes this prediction in the following manner. First, at Block A, an initialization step for a counting process is performed. This initialization step evaluates the MAC channel frame structure and locates, within the MAC channel frame, the activity field that corresponds to the MS **10** whose MAC ID is equal to the value of the Next MAC ID field. Additionally, the initialization step sets to a value of zero a variable which represents the result of the counting process. The counting process is performed at Blocks B through D inclusive. Within the process a predicting MS **10** counts, in a cyclic manner, activity fields within the MAC control frame structure with values of zero. At Block B, the counting process starts at the Next MAC ID's activity field position and, moving from left to right, retrieves the next activity field in the MAC control frame whose value is zero. At Block C, this retrieved activity field is evaluated to determine whether it corresponds to the MAC ID of the predicting MS **10**. If this retrieved activity field corresponds to the MAC ID of the predicting MS **10** then the counting process is complete, and the prediction algorithm continues at Block E. However, if the retrieved activity field does not correspond to the predicting MS, then the variable which represents the counting result is incremented by one at Block D. Note, because the accounting process begins after retrieval of the activity field which corresponds to the Next MAC ID, this activity field is excluded from the count. The counting process will cycle through Blocks B, C, and D until the activity field corresponding to the predicting MS **10** is encountered, i.e. the condition evaluated in Block C is "YES".

After the counting process has completed, the prediction procedure continues, at Blocks E and F, by performing a calculation which uses the current value of the #Free Channels field and the counting variable defined above. For purposes of illustration, if the predicting MS **10** assigns the result of the counting process to a variable "x", and assuming the current #Free Channels field is assigned to a variable "M", the calculation at Blocks E and F is represented by the following formula:

$$y=\mathrm{INT}(x/M)+1. \quad (1)$$

If the current slot number is j, then the (j+y)th slot is the predicting MS's turn to have the token. Also, this implies that if the predicting MS's position is within M−1 zero bits of the MS corresponding to the Next MAC ID, then a token will be allocated to the predicting MS in the next slot because a traffic channel will be available.

In the minimum form, the prediction of token usage is only valid for the next time slot. That is, the BS **30** may update the token allocation information every time slot. To reduce the MS's **10** receiving activity, the BS **30** may choose to update the token allocation information differently so that the calculation from Equation (1) is valid for the next x time slots, or a time period referred to as a super-frame. Consequently, the MS **10** does not have to decode the MAC message in every time slot in order not to miss its turn for transmission. The super-frame time period is controlled by the BS **30**.

In accordance with this invention, and referring to FIG. **5**, packet MS operation is as follows. Whenever a MS **10** with packet data service mode activated enters the cell, or when a MS **10** in the cell activates packet data mode, the BS **30** assigns a MAC ID number, and thus a corresponding activity field, to the MS **10**. This assignment, referred to as virtual call set-up, is shown at Block A. At Block B, the MS **10** stores the temporary MAC ID in the memory **24**.

Once the MAC ID and activity field are assigned, the MS **10** decodes the broadcast MAC messages sent from the BS **30**. This decoding, shown at Block C and D, continues until the MS **10** determines that it was allocated the token by the BS **30**. Allocation of the token enables the MS **10** to transmit its packet data. However, at Block E, the MS **10** must first determine whether it has packet data to send. If the MS **10** does not have packet data to send it continues to decode MAC messages and the BS **30** will allocate the token to the next MS **10** in the subsequent time slot. If the MS **10** does have data to transmit then it begins a transmission process as shown in Blocks F through I. First, at Block F, the MS **10** transmits a preamble message on the reverse link to the BS **30**. If the BS **30** receives the preamble it replies with an acknowledgment. If the acknowledgment is received then the MS **10**, as shown in Blocks G and H, transmits its packet data. The transmission continues until all MS **10** packet data is sent, or a maximum number of bytes to transmit is surpassed, or a predetermined time-out period is exceeded, shown in Block H and I. If the maximum number of bytes to transfer is encountered or the time-out period is exceeded, transmission may be stopped and the transmitting MS **10** returned to the decoding step, Block C, described above. However, if packet data transmission is successful the packet data call is terminated, the transmission process is complete, and the token is allocated by the BS **30** in the subsequent time slot to the next MS **10** in the cell.

In accordance with the present invention, the BS **30** allows the MS **10** to turn off its receiver and save power during the periods when the MS is not allocated the token. If the MS **10** does shut down its processing between tokens, the BS **30** informs the MS **10**, before the MS **10** shuts down, when it should start its processing again, i.e. when the MS **10** will be allocated the token again. This notification by the BS **30** before the MS **10** shuts down is possible as the token is assigned in advance. Thus, a "dynamic slotted mode" operation is provided, the operation being dynamic in that the position of the slot need not be the same in every cycle.

The slot position is a function of how many active MSs **10** are on the channel, and on how much data each MS **10** can transmit. Additionally, the number of slots is a function of the number of available channels at the BS **30**.

The BS **30** may transmit packets destined for a MS **10**, if any, or fill data, on the forward link at the same time that the MS **10** is allocated a token and is transmitting packets on the reverse link. This allows the BS **30** to send power control information to the MS **10**.

In accordance with this invention, and referring to FIG. **6**, packet BS **30** operation is as follows. Note, FIG. **6** assumes that the BS **30** has divided traffic channel access into the discrete time periods referred to above as time slots. Thus, BS **30** operation, as shown in FIG. **6**, begins when a MS **10** activates packet data mode. At Block A, the BS **30** assigns a MAC ID number and activity field to the MS **10** with packet data mode active, this assignment is referred to as virtual call set-up. In virtual call set-up, the BS **30** initially assigns the activity field corresponding to the MS **10** a value of one. On the subsequent MAC frame, shown at Block B, the BS **30** sets this activity field value to zero, which indicates that the MS **10** of the newly assigned MAC ID is in the queue for access to a traffic channel. Whenever a MS **10** with packet data service mode active leaves the cell, or deactivates the packet data mode, the BS **30** release the MAC ID number from the MS **10** and, in the subsequent MAC message, the BS **30** sets the corresponding activity field of the released MAC ID to one, thus dequeuing the MS **10** from traffic channel access.

At Block C, the BS **30** evaluates the queue of MSs **10** awaiting a token. If no MSs are waiting, the scheduling process is complete. However, if one or more MSs remain queued for access, the BS determines a scheduling sequence. At Block D, a scheduling algorithm is employed which considers one or more parameters including, for example, prioritized access, service quality factors, and a maximum number of bytes to transmit by each MS **10**. Once a schedule is determined which ensures efficient packet data transmission the BS **10** updates the MAC control structure frame to reflect the schedule.

The BS **30** performs this updating, shown at Block E, as follows. A change in token scheduling status begins when the BS **30** cycles the value assigned to the Next MAC ID field to identify the MAC ID of the MS **10** that is to be allocated the token in the next time slot. Once this MS **10** is allocated the traffic channel and begins transmission of its packet data the BS **30** updates the MS's corresponding activity field to a value of one, decreases the value of the #Free Channels field by a value of one, and reassigns the value of the Next MAC ID field to identify the MS **10** that is to transmit its packet data in the next time slot.

This cyclic assignment can be further demonstrated by considering the MAC control frame structure fields in both an inactive and active state. In the inactive state, when there are no packet data MSs **10** within a cell, all activity fields of the MAC control structure frame are a value of one, the Next MAC ID field has a value of zero, and the #Free Channels field has a value equal to the maximum number of receivers **30***a* in the BS **30** that are allocated for packet services. In the active state, after the BS **30** has assigned a unique MAC ID to each packet mode MS **10** in a cell, the MAC control frame activity fields corresponding to the assigned MAC IDs without a token are a value of zero, the Next MAC ID field is a value which corresponds to the MAC ID of the MS **10** that is scheduled to be allocated a token in the next time slot, and the #Free Channels field is a value which represents the number of receivers **30***a* in the BS **30** that support packet service, less the number of channels occupied by MSs **10** that currently are allocated the token or tokens. Note, the BS **30** decreases the value of the #Free Channels field by one whenever a MS **10** successfully acquires a traffic channel and starts to transmit packet data. Likewise, the BS **30** increases the value of the #Free Channels field by one when the traffic channel is released at the end of packet transmission. Thus, the transmission schedule is defined by the values of the MAC control frame structure fields.

At Block F, the BS **30** broadcasts the MAC control frame structure to each MS **10** within the cell. As discussed above, when broadcasting MAC channel messages to all MSs **10** within a cell the BS **30** preferably uses a public long code mask, and when transmitting the MAC channel messages to a specific MS **10** the BS **30** may use a permuted electronic serial number (ESN) of the MS **10** as a long code mask.

The MS **10** decodes the MAC message and evaluates the MAC control frame fields to determine the traffic channel access schedule. To ensure preemptive control of channel access the BS **30** monitors, at Block G, the transmissions of the MS **10** that is allocated the token. For example, at Block H, if the maximum number of bytes per transmission is exceeded the BS **30** may force the termination of the MS **10** transmission and return the MS to the queue for token assignment. If the MS **10** transmission completes, as shown in Block I, the BS **30** reallocates the token in the next time slot. This reallocation process is accomplished by looping back to the above evaluation of MSs awaiting packet data transmission permission, Blocks C through I. If transmission is not complete, the BS **30** may rebroadcast the MAC message and continue to monitor the MS's transmission. This scheduling process continues until there are no packet data MSs queued for transmission, i.e. all MS packet data transmissions are complete.

It should be realized that a plurality of MSs **10** could each be allocated a token, giving the mobiles the right to access respective available traffic channels in the BS **30**, in a given time slot. By example, if there are n available traffic channels, upto n mobile stations can be granted the token to transmit during a next time slot.

While the invention has been particularly shown and described with respect to preferred embodiments thereof, it will be understood by those skilled in the art that changes in form and details may be made therein without departing from the scope and spirit of the invention.

What is claimed is:

1. A method for transmitting packet data from a plurality of mobile stations to a base station, comprising the steps of:

broadcasting media access control (MAC) information from the base station to the plurality of mobile stations for simultaneous reception by the plurality of mobile stations, wherein the MAC information comprises a MAC control frame structure for conveying packet data transmission scheduling information, the MAC control frame structure including a plurality of activity fields, one activity field for each active packet data mobile station within a cell, a Next MAC ID field which specifies the identification of a mobile station to be given traffic channel access in a next time slot, and a #Free Channel field which specifies a number of available traffic channels for packet data service at the base station;

receiving the broadcast MAC information at the plurality of mobile stations; and

for a mobile station specified in the MAC information, transmitting packet data to the base station at a time specified by the MAC information.

2. A method as in claim 1, wherein a set of the mobile stations transmit their respective packet data over a same traf fic channel at dif ferent times, as specified by the MAC information.

3. A method as in claim 1, wherein the step of broadcasting uses a dedicated MAC channel.

4. A method as in claim 1, wherein the base station transmits packet data destined for the mobile station on a forward link at the same time the mobile station transmits packet data on the reverse link.

5. A method as in claim 1, wherein the identification of the mobile station is by a temporary number (MAC ID) that is assigned to the mobile station by the base station.

6. A method as in claim 1, wherein transmissions of packet data from the mobile station to the base station are preemptively controlled and scheduled by the base station.

7. A method as in claim 1, wherein the base station transmits MAC information to a specific mobile station using a permuted electronic serial number (ESN) of the mobile station as a long code mask, and broadcasts MAC information to all mobile stations within a cell using a public long code mask.

8. A method as in claim 1, wherein transmissions between the base station and mobile stations employ spreading codes, a unique spreading code to identify transmissions to each mobile station individually, and a public spreading code to identify a broadcast to all mobile stations.

9. A method as in claim 1, wherein a base station of an original cell and a base station of a new cell both receive a transmission from a mobile station during a transition period from the original cell to the new cell.

10. A cellular communication system, comprising:

a plurality of base stations, each base station having an associated cell;

a plurality of mobile stations located within said cells;

means in each said base station for broadcasting media access control (MAC) information from said base station to mobile stations located within the base station's cell, wherein said MAC information comprises a MAC control frame structure for conveying packet data transmission scheduling information, said MAC control frame structure including a plurality of activity fields, one activity field for each active packet data mobile station within said cell, a Next MAC ID field which specifies said identification of said mobile station to be given traffic channel access in a next time slot, and a #Free Channels field which specifies a number of available traffic channels for packet data service at said base station;

each of said mobile stations comprising a receiver for receiving said broadcast MAC information simultaneously with other mobile stations; and

each of said mobile stations further comprising a controller, responsive to said broadcast MAC information, for transmitting packet data from said mobile station to said base station at a time specified by the received MAC information.

11. A system as in claim 10, wherein a set of said mobile stations transmit their respective packet data over a same traffic channel at different times, as specified by said MAC information.

12. A system as in claim 10, wherein said means for broadcasting uses a dedicated MAC channel.

13. A system as in claim 10, wherein said receiver receives a dedicated MAC channel using a predefined spreading code.

14. A system as in claim 10, wherein said base station transmits packet data destined for said mobile station on a forward link at the same time said mobile station transmits packet data on the reverse link.

15. A system as in claim 10, wherein transmissions of packet data from said mobile station to said base station are preemptively controlled and scheduled by said base station.

16. A system as in claim 10, wherein said base station transmits MAC information to a specific mobile station using a permuted electronic serial number (ESN) of said mobile station as a long code mask, and broadcasts MAC information to all mobile stations within a cell using a public long code mask.

17. A system as in claim 10, wherein transmissions between said base station and said mobile stations employ spreading codes, a unique spreading code to identify transmissions to each mobile station individually, and a public spreading code to identify a broadcast to all mobile stations.

18. A system as in claim 10, wherein said base station of an original cell and said base station of a new cell temporarily receives a transmission from said mobile station during a transition period from the original cell to a new cell.

19. The system of claim 10, wherein the identification of the mobile station is by a temporary number (MAC ID) that is assigned to the mobile station by the base station.

* * * * *