UNITED STATES DISTRICT COURT
EASTERN DISTRICT OF TEXAS
TEXARKANA DIVISION

PANTECH CORPORATION and PANTECH WIRELESS, LLC, *Plaintiffs*, v. LG ELECTRONICS INC., and LG ELECTRONICS U.S.A., INC., *Defendants*.	)	Case No. 5:22-cv-00113 **JURY TRIAL DEMANDED**

DEFENDANTS' INVALIDITY CONTENTIONS

TABLE OF CONTENTS

Page

I. GENERAL STATEMENT AND RESERVATION OF RIGHTS 1

A. General Reservation of Rights 1

B. Asserted Claims and Priority Dates 1

C. Claim Construction 3

D. Doctrine of Equivalents 5

E. Ongoing Discovery and Disclosures 6

F. Invalidity and/or Unenforceability and/or Ineligibility Based on Non-Required Disclosure(s) 8

G. No Patentable Weight 8

II. INVALIDITY CONTENTIONS UNDER §§ 102, 103 8

A. Prior Art Patents and Printed Publications 8

B. Applicant Admitted Prior Art and Knowledge of a POSITA 10

1. Wireless Network APA 10

2. 3GPP APA 11

3. Mobile Device Multitasking APA 14

4. Mobile Device Hardware APA 16

5. Messaging Services APA 17

C. LG's Invalidity Claim Charts Demonstrating Invalidity of the Asserted Claims 18

1. Identification of Each Item of Prior Art that Anticipates Each Asserted Claim of the '924 Patent and Each Reference and Combination of References that Renders Obvious the Asserted Claims of the '924 Patent 23

2. Identification of Each Item of Prior Art that Anticipates Each Asserted Claim of the '545 Patent and Each Reference and Combination of References that Renders Obvious the Asserted Claims of the '545 Patent 45

3. Identification of Each Item of Prior Art that Anticipates Each Asserted Claim of the '247 Patent and Each Reference and Combination of References that Renders Obvious the Asserted Claims of the '247 Patent 55

4. Identification of Each Item of Prior Art that Anticipates Each Asserted Claim of the ’809 Patent and Each Reference and Combination of References that Renders Obvious the Asserted Claims of the ’809 Patent 71

5. Identification of Each Item of Prior Art that Anticipates Each Asserted Claim of the ’486 Patent and Each Reference and Combination of References that Renders Obvious the Asserted Claims of the ’486 Patent 86

6. Identification of Each Item of Prior Art that Anticipates Each Asserted Claim of the ’839 Patent and Each Reference and Combination of References that Renders Obvious the Asserted Claims of the ’839 Patent 98

7. Identification of Each Item of Prior Art that Anticipates Each Asserted Claim of the ’631 Patent and Each Reference and Combination of References that Renders Obvious the Asserted Claims of the ’631 Patent 112

D. Additional Prior Art Offered For Sale and/or Publicly Used or Known or That May Lead to Discovery of Additional Prior Art 126

1. The ’924 Patent 126

2. The ’545 Patent 127

3. The ’247 Patent 128

4. The ’809 Patent 130

5. The ’486 Patent 131

6. The ’839 Patent 133

7. The ’631 Patent 133

E. Invalidity under 35 U.S.C. §§ 102(f)-(g) 134

1. The ’924 Patent 134

2. The ’545 Patent 135

3. The ’247 Patent 137

4. The ’809 Patent 138

5. The ’486 Patent 139

III. MEANS PLUS FUNCTION LIMITATIONS 140

IV. INVALIDITY UNDER § 112 141

A. Invalidity Under 35 U.S.C. §112, ¶1 141

B. Invalidity Under 35 U.S.C. § 112, ¶ 2 144

V. INVALIDITY UNDER § 101 147

A. The ’247 Patent 147

B. The ’809 Patent 148

C. The ’839 Patent 151

D. The ’631 Patent 152

Pursuant to the Court's February 21, 2023, Docket Control Order (Dkt. No. 73), March 20, 2023 First Amended Docket Control Order (Dkt. No. 83) (the Docket Control Order and First Amended Docket Control Order, collectively the "DCOs"), and Patent L.R. 3-3, Defendants LG Electronics Inc., and LG Electronics U.S.A., Inc. (collectively, "LG" or "Defendants") hereby disclose their Invalidity Contentions with respect to the claims identified by Plaintiffs Pantech Corporation and Pantech Wireless, LLC ("Pantech" or "Plaintiffs") in its Patent Rule 3-1 and 3-2 Infringement Contentions (dated February 15, 2023) ("Infringement Contentions"). Defendants contend that each of the claims asserted by Plaintiffs is invalid under at least 35 U.S.C. §§ 101, 102, 103, and/or 112.

I. GENERAL STATEMENT AND RESERVATION OF RIGHTS

A. General Reservation of Rights

These Invalidity Contentions, along with the information and documents that LG produces herewith, are subject to further revision. LG reserves the right to amend these contentions based on new positions or contentions identified by Pantech, further discovery in this matter, or Court rulings (or any other related reason) such as described herein, including invalidity arguments that are not required to be disclosed under Patent L.R. 3-3.

B. Asserted Claims and Priority Dates

In Pantech's Infringement Contentions, Pantech asserts that LG infringes the following patents ("Asserted Patents"), claims ("Asserted Claims"), and priority dates in its Infringement Contentions ("Asserted Priority Dates"):

Asserted Patents	Asserted Claim(s)[1]	Earliest Asserted Priority Dates[2]
9,136,924 (“’924 Patent”)	17-19, 22-25, 28	July 5, 2010
9,854,545 (“’545 Patent”)	2, 3	February 10, 2010[3]
10,869,247 (“’247 Patent”)	1, 2, 8, 11, 12, 18	November 5, 2003
9,313,809 (“’809 Patent”)	1-10	September 28, 2007
9,065,486 (“’486 Patent”)	3, 4	December 16, 2002
7,283,839 (“’839 Patent”)	1, 2	April 14, 2004
9,575,631 (“’631 Patent”)	1-4, 8, and 9	August 11, 2005

Defendants do not agree that the Asserted Claims of the Asserted Patents are entitled to the Asserted Priority Dates, as Pantech has failed to prove it is entitled to its Asserted Priority Dates. For example, Pantech has not shown any basis for why it is entitled to the Asserted Priority Dates as opposed to a later date, such as the filing date for each Asserted Patent. Unless otherwise indicated, any reference to a “priority date” or “Asserted Priority Date” in these Invalidity Contentions refers to the priority dates identified in Pantech’s Infringement Contentions. Reference to a “priority date” or an “Asserted Priority Date” should not be construed to mean that Defendants agree that any of the Asserted Patents are in fact entitled to

[1] LG’s invalidity contentions do not address any claims not currently asserted in Pantech’s Infringement Contentions that is not a claim from which an Asserted Claim depends.
[2] By listing the Asserted Priority Dates listed in Pantech’s Infringement Contentions, LG does not concede that any of the Asserted Patents are entitled to the Asserted Priority Dates.
[3] Pantech cannot be entitled to a January 28, 2010 priority date based on the filing date of KR10-2010-0008683. According to the face of the ’545, KR10-2011-0008683 was filed on January 28, 2011.

such priority date, or that Pantech has provided proper notice as to its contentions for a priority date.[4] To the extent Pantech alleges that any prior art relied on in these Invalidity Contentions does not actually qualify as prior art to an Asserted Patent, Defendants reserve the right to rebut those allegations (*e.g.*, by demonstrating an earlier critical date for the challenged prior art and/or a later priority date for a particular Asserted Patent and/or Asserted Claim).[5] Likewise, to the extent Pantech successfully establishes an invention date before any of the prior-art references relied on by Defendants, then those references serve as evidence of secondary considerations of obviousness, particularly, contemporaneous invention by others.

C. Claim Construction

Claim construction proceedings for this action have not yet occurred. Accordingly, LG reserves the right to modify, amend, or supplement its Invalidity Contentions following claim construction rulings from this Court, or to the extent permitted by this Court. LG also reserves the right to modify, amend or supplement its invalidity contentions upon Pantech's modification of its asserted claim constructions, including as adopted by Pantech in its Infringement Contentions.

LG's Invalidity Contentions are based in part on LG's present understanding of Pantech's Infringement Contentions. The Infringement Contentions are deficient in multiple respects and do not provide Defendants with sufficient information to understand the specific accused features and components and the alleged factual and evidentiary bases for Pantech's infringement allegations. Among other things, the Infringement Contentions lack the specificity required by

[4] Defendants reserve the right to rely on additional documents and evidence, including without limitation the documents cited in Pantech's Infringement Contentions, in the event that Pantech fails to establish that any Asserted Claim of any Asserted Patent is entitled to its Asserted Priority Date.

[5] Defendants reserve the right to rely on additional documents and evidence to rebut any efforts by Pantech to allege any reference was not publicly available or otherwise available as prior art.

P.R. 3-1, fail to properly identify accused instrumentalities, and fail to explain adequately Pantech's infringement theories for numerous limitations. Pantech has prejudiced Defendants' ability to understand, for purposes of preparing these Invalidity Contentions, what Pantech alleges to be the scope of the Asserted Claims. If Pantech modifies any assertion or contention in its Infringement Contentions, or presents any new assertion or contention relevant to these Invalidity Contentions to the extent allowed by the Local Patent Rules or the Court, Defendants reserve the right to supplement or otherwise amend these initial Invalidity Contentions. Additionally, in some instances, Pantech's Infringement Contentions contradict the understanding of the claim terms by a person of ordinary skill in the art ("POSITA"), and are vague and conclusory concerning how the claim limitations supposedly read on the accused products or activities. In addition, Pantech fails (i) to specify where each limitation of the Asserted Claims is found in each accused instrumentality and (ii) to identify corresponding structure in the patent and accused instrumentalities for terms that it alleges may be treated as means-plus-function terms. As a result, LG is currently unable to fully discern Pantech's position regarding the construction of the patent claim limitations or terms. To the extent that Pantech supplements its Infringement Contentions, LG reserves the right to modify, amend, and/or supplement its Invalidity Contentions.

In preparing these contentions, LG contends that each of the Asserted Claims is invalid both under any reasonable construction of the term, the term's plain and ordinary meaning, and/or under Pantech's apparent construction of the term, and unless otherwise explicitly indicated, should not be interpreted as agreeing to any purported construction of any claim element. By including prior art that is anticipatory or renders obvious claims based on the construction apparently applied by Pantech to its claims, LG's Invalidity Contentions are not—

and should not be interpreted as—adoptions or admissions as to the accuracy of that scope or construction.

Nothing in LG's Invalidity Contentions should be deemed an admission regarding the scope of any claims or the proper construction of those claims or any terms contained therein. Nor should anything contained herein be understood or deemed to be an express or implied admission or contention with respect to the proper construction of any terms in any asserted claim, or with respect to the alleged infringement of that claim.

Unless otherwise stated herein, LG takes no position on any matter of claim construction in these Invalidity Contentions. LG reserves the right to propose any claim construction it considers appropriate and to contest any claim construction it considers inappropriate. LG also reserves the right to argue that certain claim terms, phrases, and elements are indefinite, lack written description, are not enabled, are not patentable, are not novel or are otherwise invalid under 35 U.S.C. § 101 or § 112.

LG reserves the right to further supplement or modify the positions and information in these Invalidity Contentions, including without limitation, the prior art and grounds of invalidity set forth herein, after the Asserted Claims have been construed, in accordance with the Court's Orders.

D. Doctrine of Equivalents

Pantech has alleged that several of the limitations of the Asserted Claims are infringed under the doctrine of equivalents. Additionally, Pantech asserts that to the extent any limitation is not literally present, "such limitation is present under the doctrine of equivalents in each of the Accused Instrumentalities." *See, e.g.*, Infringement Contentions at 27-28. Initially, this alleged doctrine of equivalents theory is improper because any doctrine of equivalents theory "must be laid out in detail in a party's infringement contentions"; conclusory allegations are insufficient.

Sycamore IP Holdings LLC v. AT&T Corp., No. 16-cv-588, 2017 WL 4517953, at *3 (E.D. Tex. Oct. 10, 2017) (collecting cases). Regardless, for each element that Pantech alleges is met under the doctrine of equivalents, each of the prior art references in Sections II.B-E discloses or at least renders obvious, individually or when combined with other references, the Asserted Claims for the reasons that Pantech alleges the claims are satisfied under the doctrine of equivalents and as set forth in Exhibits A0-G14. *Brown v. 3M*, 265 F.3d 1349, 1352 (Fed. Cir. 2001) ("That which infringes if later anticipates if earlier.").

E. Ongoing Discovery and Disclosures

Discovery in this case and LG's investigations are continuing. LG expressly reserves the right to amend or modify these disclosures based on additional information obtained through continued formal discovery or other means pursuant to Fed. R. Civ. P. 26(e). Discovery is ongoing and LG has not yet completed its search for and analysis of relevant prior art and other information, some of which is in the possession of third parties, and some of which was unavailable to, or not yet known by, LG. For example, Pantech failed to timely produce relevant invalidity contentions and pleadings presenting invalidity theories challenging the validity of the Asserted Patents, and patents related thereto, when it was required to do so according to the Court's DCOs and Discovery Order (Dkt. 75) on February 21, 2023. LG reserves the right to supplement, amend, or alter the positions taken and information disclosed in these Invalidity Contentions. To the extent that Pantech's production of such documents relating to the patentability of the Asserted Claims remains incomplete, LG further reserves the right to supplement, amend, or alter the positions taken and information disclosed in these Invalidity Contentions.

LG further reserves the right to revise, amend, or supplement the information provided herein, including by identifying, charting, and relying on additional information, references,

systems, and devices, should LG's further search and analysis yield such additional information, references, systems, or devices, consistent with the Court's Docket Control Order and the Federal Rules of Civil Procedure. In addition, LG reserves the right to supplement, amend, or alter the positions taken and information disclosed in these Invalidity Contentions, including without limitation, the prior art and grounds of invalidity set forth herein under 35 U.S.C. §§ 101, 102, 103 or 112, to take into account information or defenses that may come to light as a result of LG's discovery efforts; additional information obtained as to the priority date(s) of the asserted claim; testimony or documents produced by a party or non-party; and positions that Pantech may take concerning infringement or invalidity issues. For example, LG may seek further discovery from third parties believed to have knowledge, documentation, or corroborating evidence concerning items of prior art, including prior art listed in the Exhibits hereto. Such third parties may include, without limitation, the authors, inventors, assignees, owners, or developers of the references and technologies listed in these disclosures. In particular, LG reserves the right to assert invalidity under 35 U.S.C § 102(c), (d), (f), or (g) to the extent that discovery or further investigation yields information forming the basis for such grounds for invalidity.

LG further reserves the right to rely upon prior art cited in the file histories of the Asserted Patents and related U.S. and foreign patent applications, including post-issuance proceedings, as invalidating references or to show the state of the art. LG further intends to rely on inventor admissions, and admissions by Pantech and others providing testimony on behalf of Pantech (*e.g.*, experts), concerning the scope of the prior art relevant to the Asserted Patents found in, *inter alia*: the patent prosecution history for the Asserted Patents and any related patents or patent applications, including post-issuance proceedings; any deposition testimony of

the named inventors on the Asserted Patents; and the papers filed and any evidence submitted by Pantech in connection with this litigation, prior litigations, and other proceedings involving the Asserted Patents. LG hereby incorporates by reference the relevant testimony of any fact witnesses who are deposed, provide declarations, or otherwise testify in this lawsuit. LG also hereby incorporates by reference the reports and testimony of LG's expert witnesses regarding invalidity of the Asserted Patents.

F. Invalidity and/or Unenforceability and/or Ineligibility Based on Non-Required Disclosure(s)

Defendants reserve the right to prove the invalidity, unenforceability and/or ineligibility of one or more of the Asserted Claims on bases other than those required to be disclosed in these disclosures pursuant to P.R. 3-3.

G. No Patentable Weight

Defendants reserve the right to argue that various portions of the Asserted Claims, such as an intended use or result, non-functional descriptive material, and certain preamble language, are entitled to no patentable weight. Mapping of an element of an Asserted Claim to a prior art reference is not a representation that any such element is limiting and/or entitled to patentable weight.

II. INVALIDITY CONTENTIONS UNDER §§ 102, 103

A. Prior Art Patents and Printed Publications

Each of the Asserted Claims is anticipated and/or rendered obvious by prior art. Pursuant to the Court's Docket Control Order, LG identifies the prior art references that anticipate or render obvious an Asserted Claim below and in Sections II.B-E and Exhibits A0-G14, which are hereby incorporated by reference as if fully set forth herein.

In addition, upon information and belief, Pantech has in its possession, custody, and/or control invalidity contentions and pleadings from previous defendants challenging the Asserted Patents, as well as patents related thereto. LG identifies and hereby incorporates by reference as if set forth fully herein the prior art references and invalidity contentions as described in any other lawsuits or proceedings concerning the Asserted Patents and/or patents related to the Asserted Patents, including but not limited to:

- *Pantech Corporation v. GNJ Manufacturing, Inc.*, No. 21-cv-62474 (S.D. Fla.);
- *Pantech Corporation v. BLU Products, Inc.*, No. 1:21-cv-20327 (S.D. Fla.);
- *Pantech Corporation v. BLU Products, Inc.*, No. 1:21-cv-22663 (S.D. Fla.);
- *Pantech Corporation v. ASUSTeK Computer Inc.*, No. 5:21-cv-00105 (E.D. Tex.);
- *Pantech Corporation v. OnePlus Technology (Shenzhen) Co., Ltd.*, No. 5:22-cv-00069 (E.D. Tex.).

Less than one week before these invalidity contentions were due, on April 7, 2023, Pantech produced invalidity contentions from Coolpad and OnePlus. LG has not had an opportunity to meaningfully analyze these contentions in detail and reserves the right to supplement its contentions following additional review of those contentions. LG incorporates by reference as if set forth fully herein these contentions from Coolpad and OnePlus. To the extent those contentions identify any prior art references not otherwise identified in these contentions, a POSITA would have been motivated to combine those references with the references identified in Sections II.B-E for the reasons set forth below in, e.g., Section II.C, and for the reasons set forth in the Coolpad and OnePlus contentions. Pantech has not produced any other contentions or pleadings in any other matter relating to invalidity despite having access to these materials. Accordingly, LG reserves the right to supplement its Invalidity Contentions based on any

invalidity arguments set forth in contentions that were either previously unproduced and/or untimely produced by Pantech, once Pantech produces the contentions. In incorporating these contentions by reference, LG intends for all contentions addressing claims and claim limitations in unasserted patents to apply to those similar claims and limitations that appear in the Asserted Claims (including claims from which the Asserted Claims depend) of the Asserted Patents.

B. Applicant Admitted Prior Art and Knowledge of a POSITA

Each of the references identified in Sections II.B-E may be used in combination with admissions in the specification regarding the prior art to render obvious the Asserted Claims. More particularly, public admissions by Pantech and/or the named inventors, as well as admissions about the prior art in the specifications of the Asserted Patents and the corresponding prosecution histories, are binding, and can be used when determining whether a claim is obvious. *Pharmastem Therapeutics, Inc. v. Viacell, Inc.*, 491 F.3d 1342, 1362 (Fed. Cir. 2007) ("Admissions in the specification regarding the prior art are binding on the patentee for purposes of a later inquiry into obviousness."); *Constant v. Advanced Micro–Devices, Inc.*, 848 F.2d 1560, 1570 (Fed.Cir.1988) ("A statement in the patent that something is in the prior art is binding on the applicant and patentee for determinations of anticipation and obviousness.").

For example, the specifications identify numerous features of the claims that were known and in-use prior to the alleged invention of the Asserted Patents. Collectively, these admissions are referred herein, and in the supporting exhibits, as "Admitted Prior Art" or "APA."

1. Wireless Network APA

Wireless networks, including communications between a user equipment (UE) and evolved Node B (eNB), were known and considered prior art to the Asserted Patents. E.g.:

- '545 patent, 1:29-39 ("Discussion of Background [¶] Synchronization between a user equipment (UE) and an evolved Node B (eNB) is an important issue in a wireless communication system since transmission/reception of information between the UE and

the eNB may not be performed without synchronization. [¶] Current wireless communication needs to satisfy a user demand through use of a plurality of CCs, unlike a conventional wireless communication system that supports a single component carrier (CC) or a single service band.”).

- ’247 patent, 3:3-4 (“FIG. 1 shows a conventional wireless communication system”).
- ’247 patent, Fig. 1:

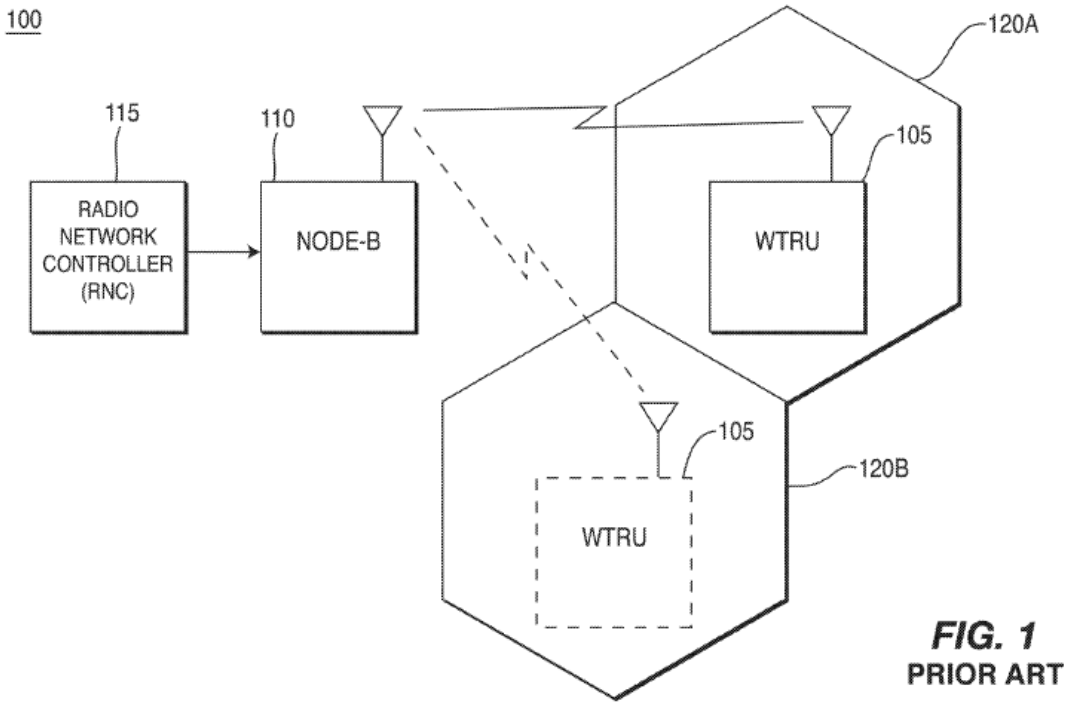

FIG. 1
PRIOR ART

2. 3GPP APA

3GPP standardized protocol features were known and considered prior art to the Asserted Patents. E.g.

- ’247 patent, 1:45-57 (“Many schemes have been proposed to improve coverage, throughput, and transmission latency for EU transmissions in third generation partnership project (3GPP). One of the developments is to move the functions for scheduling and

assigning uplink (UL) physical channel resources from a radio network controller (RNC) to a Node-B. A Node-B can make more efficient decisions and manage UL radio resources on a short-term basis better than the RNC, even if the RNC retains overall control over Node-Bs. A similar approach has already been adopted in downlink for high speed data packet access (HSDPA) in both universal mobile telecommunication system (UMTS) frequency division duplex (FDD) and time division duplex (TDD) modes.”).

- ’247 patent, 1:58-62 (“It has also been recognized that performance is greatly enhanced with the use of medium access control (MAC) level automatic repeat request (ARQ) and hybrid ARQ (H-ARQ). Application of these techniques during soft handover provides additional significant benefits.”).
- ’247 patent, 1:63-2:3 (“FIG. 1 shows a conventional wireless multi-cell communication system 100 including a wireless transmit/receive unit (WTRU) 105, a Node-B 110, an RNC 115, and at least two cells 120A, 120B. Each of the cells 120A, 120B, is served by the Node-B 110. Node-B 110 is controlled by the RNC 115. When a change in the cell offering the best radio conditions is determined between cells 120A and 120B, a handover process is initiated.”).
- ’247 patent, 2:4-11 (“An ‘intra-Node-B handover’ occurs when a WTRU changes from one cell to another cell controlled by the same Node-B, as shown in FIG. 1. An ‘inter-Node-B handover’ occurs when a WTRU changes from one cell to another cell controlled by a different Node-B. In the latter case, the Node-B that controls the cell before the handover is called a source Node-B, and the Node-B that controls the cell after the handover is called a target Node-B.”)
- ’247 patent, 2:11-22 (“During soft handover, a WTRU establishes a plurality of connections with a plurality of Node-Bs in an active set. In this situation, a problem may arise for scheduling and H-ARQ operation. A WTRU may receive conflicting EU transmission scheduling from more than one Node-B. It is also difficult for the WTRU to receive, decode and process H-ARQ positive and negative acknowledgements (ACKs/ NACKs) generated by a plurality of Node-Bs. The soft buffer of an H-ARQ process in Node-Bs may be corrupted during soft handover.”)
- ’247 patent, 2:23-29 (“One method to support H-ARQ across multiple Node-Bs, when the WTRU is in soft handover, is to place the ACK/ NACK generation function in the RNC, which derives a single ACK/NACK based on the results from the multiple Node-Bs. However, this approach presents a significant delay to the ACK/NACK process, which is highly undesirable for performance reasons.”)
- ’247 patent, 2:30-48 (“When a WTRU undergoes an inter-Node-B hard handover, there is a possibility that a source Node-B, which is a Node-B before hard handover is completed, may not successfully receive EU transmissions for data packets that have been NACKed prior to hard handover activation time. Other WTRUs competing for UL resources may not be provided with enough physical resources in the source cell. If data blocks that have been NACKed prior to the handover are retransmitted to the source Node-B before the handover activation timer expires, those data blocks can be combined with the previous data blocks for H-ARQ decoding. In this way, the decoding takes the advantage of previous, although failed, transmissions of those data blocks in the source cell. If data

blocks that have been NACKed prior to the handover are not retransmitted to the source Node-B before the handover activation timer is expired, they have to be transmitted again in the target cell as new data blocks. In this case, the previous transmissions of those data blocks in the source cell are not utilized.”).

- ’809 Patent, 1:30-41 (“Background - In wireless communications systems, access to radio resources is controlled by a radio network. When a wireless transmit receive unit (WTRU) has data to transmit to the network, the WTRU requires access to the radio resources before transmitting its data payload. In a Third Generation Partnership Project (3GPP) network, the WTRU may transmit on the uplink using a contentious channel known as a random access channel (RACH). Because access to the RACH is contentious, a collision might occur when multiple WTRUs are accessing the resources simultaneously.”)
- ’809 Patent, 2:1-12, Fig. 1 (“FIG. 1 is a diagram of an enhanced RACH (E-RACH) access. The E-RACH procedure may include, a RACH preamble phase and an E-RACH message phase. During the initial RACH preamble phase, a WTRU transmits a RACH preamble, it continues transmitting the preamble while ramping up the power of the transmission until it receives an initial resource assignment. The WTRU may also perform collision detection and resolution, if other WTRUs are attempting to access the RACH during this time. Once the WTRU has received permission to access the RACH, the WTRU may transmit data until the resources are released or the WTRU transitions to another state.”)

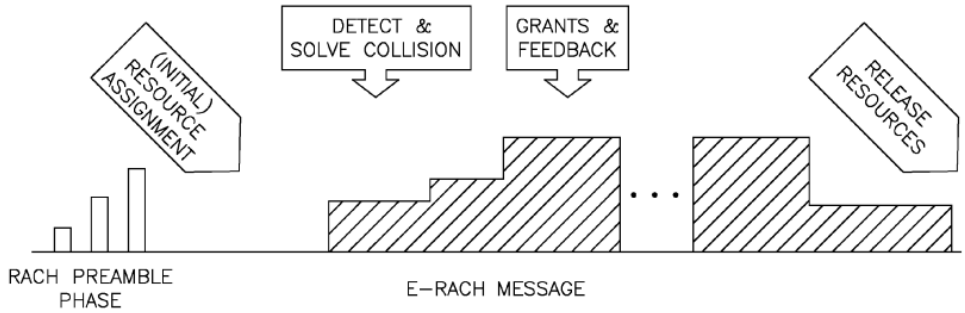

FIG. 1 (PRIOR ART)

- ’809 Patent, 2:13-15 (“As mentioned above, it was proposed to use the E-DCH in a CELL_FACH state to increase the data rate of the shared channel.”)
- ’486 Patent, 1:35-46 (“Wireless communication systems are well known in the art. Generally, such systems comprise communication stations that transmit and receive wireless communication signals between each other. Typically, base stations are provided which are capable of conducting wireless concurrent communications with a plurality of subscriber stations. In Code Division Multiple Access (CDMA) systems specified by the Third Generation Partnership Project (3GPP), base stations are called Node Bs, subscriber stations are called User Equipments (UE) and the wireless interface between the Node Bs and UEs is known as the Uu interface. FIG. 1 illustrates a typical 3GPP CDMA system.”)

- ’486 Patent, 1:59-2:6 (“FIG. 2 illustrates the processing of TrCHs in TTD mode into a Coded Composite TrCH (CCTrCH) and then into one or more physical channel data streams in accordance with 3GPP TS 25.222 v3.8.0. The steps after coding, include radio frame equalization, a first interleaving, radio frame segmentation and rate matching. The radio frame segmentation divides the data over the number of frames in the specified TTI. The rate matching function operates by means of bit repetition or puncturing and defines the number of bits for each processed TrCH which are thereafter multiplexed to form a CCTrCH data stream.”)
- ’486 Patent, 2:7-9 (“The processing of the CCTrCH data stream includes bit scrambling, physical channel segmentation, a second interleaving and mapping onto one or more physical channels.”)
- ’486 Patent, 3:10-17 (“Typically, high-rate Turbo codes are created by puncturing (i.e., eliminating) parity bits of a lower-rate code until the desired code rate is attained. Particular codes created by puncturing exhibit poorer than expected performance due to certain punctured bit patterns. Because the recursive encoding blocks in a Turbo encoder have an infinite impulse response, information about each systematic bit is distributed across many of the parity bits.”)

3. Mobile Device Multitasking APA

The ability to multitask on mobile devices and perform multiple processes concurrently was known and considered prior art to the Asserted Patents. E.g.:

- ’631 Patent, 1:29-41 (“Discussion of the Background - With the recent advance of mobile communication technology, various kinds of mobile terminals such as hand-held phones and personal digital assistants (PDAs) are commercially available. The mobile terminals have a wireless communication function, a camera function, a multimedia play function, an Internet connection function, and the like. Also, as the performance of microprocessors built in the mobile terminals is improved, a plurality of work processes can be performed concurrently. For example, an MP3 music file can be played during a phone call, or a short message service (SMS) message can be sent while an MP3 music file is played.”)
- ’631 patent, 1:52-67 (“FIG. 2 is a flowchart illustrating a conventional method for selecting a second work process during a first work process in a multitasking mobile terminal that concurrently performs a plurality of work processes. In step S10, while a first work process is performed, a user command for a second work process is inputted. In step S12, a menu window for selecting a new work process is displayed on a display of the mobile terminal in response to the user command. In step S14, the user selects a desired new work process through the displayed menu window. In steps S16 and S17, when the user wants to change the selected process into another new process, the selected work process is terminated. In step S18, a user command for selecting the another new work process is inputted. In step S19, the another new work process is selected through the displayed menu window in response to the user command.”)

- ’631 patent, Fig. 2:

FIG. 2
(PRIOR ART)

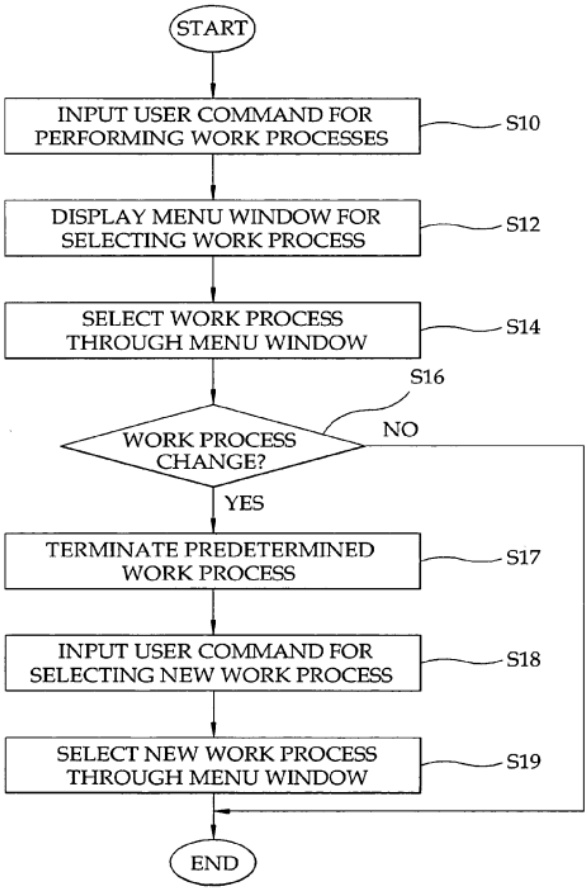

- ’631 patent, 2:1-28 (“FIG. 3 is a flowchart chart illustrating a conventional method for controlling a predetermined function of a second work process during a first work process in a multitasking mobile terminal that concurrently performs a plurality of work processes. In step S20, assuming that the first work process is an MP3 play process and the second work process is an SMS message creation process, a first command of user for the SMS message creation process is inputted while an MP3 music file is played. In step S21, a screen for the SMS message creation process is displayed in response to the first command of user, and the SMS message creation process is performed while the MP3 music file is played. In step S23, it is determined whether or not a second command of user for controlling a function of the MP3 play process is inputted while an SMS message is created. In steps S25 and S27, when the second command of user is inputted, the SMS message that is being created is stored in the memory and the SMS message creation process is terminated. In step S29, after the termination of SMS message creation process, the function of the MP3 play process is controlled. When the SMS message creation process is terminated, a screen for the MP3 play process is again displayed, and a third command of user for controlling the function of the MP3 play process is inputted. A control signal corresponding to the third command of user is generated and the function of the MP3 play process is controlled.”)

- ’631 patent, Fig. 3:

FIG. 3
(PRIOR ART)

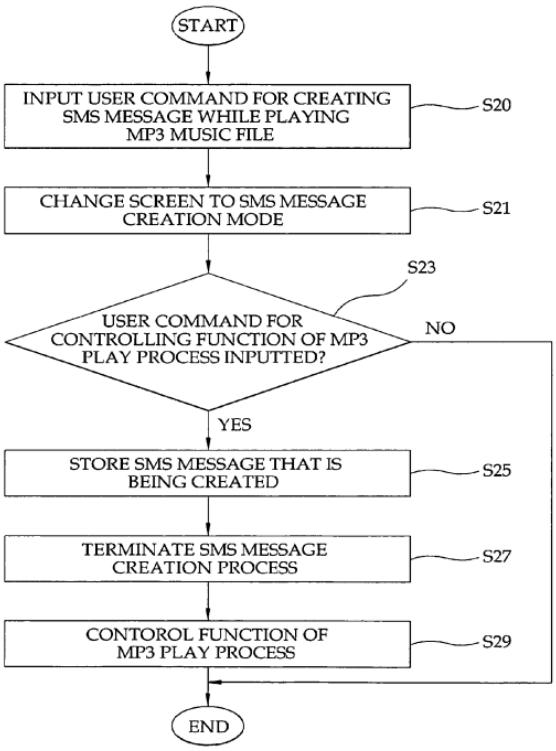

4. Mobile Device Hardware APA

Mobile device hardware was known and considered prior art to the Asserted Patents. E.g.:

- ’631 patent, 1:42-51 (“FIG. 1 is a functional block diagram of a conventional multitasking mobile terminal that concurrently performs a plurality of work processes. A mobile chipset 1 controls an overall operation of the mobile terminal according to user commands. The mobile chipset 1 transmits a control signal through a data bus 3 to a camera module 5, an MP3 module 7, and an Internet module 9 according to the user commands. Work processes of the camera module 5, the MP3 module 7, and the Internet module 9 are concurrently performed according to the control signal.”)

- ’631 patent, Fig. 1:

FIG. 1
(PRIOR ART)

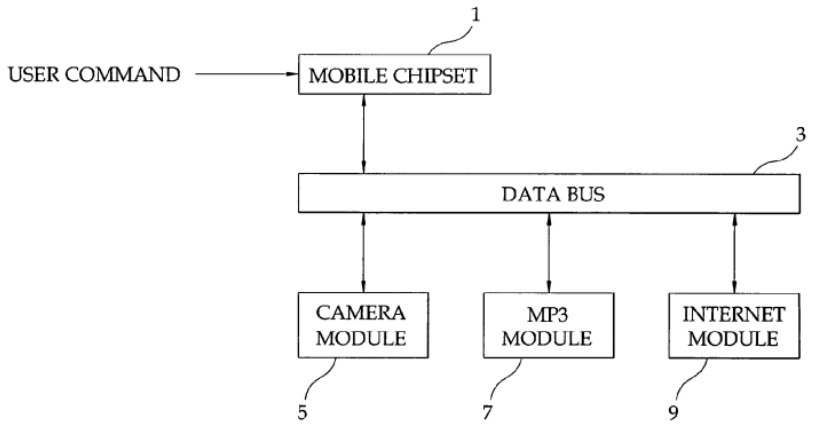

5. Messaging Services APA

Communication of different message types over wireless networks, including SMS text messages and MMS multimedia messages was known and considered prior art to the Asserted Patents. E.g.:

- ’839 Patent, 1:32-35 (“A conventional wireless communication terminal provides messaging services in different user interfaces according to the kind of messages e.g., a text message and a multimedia message.”)
- ’839 Patent, 1:36-38 (“Therefore, in the conventional method, a user should use a different interface according to the message kind to transmit and receive the text message or the multimedia message.”)
- ’839 Patent, 1:39-44 (“Also, although the user does not need to know each technology used for each message type, the conventional wireless terminal provides different terms for each of messaging menus. Therefore, there is a problem that the user should use the various messaging services frequently in the conventional method.”)
- ’839 Patent, 1:45-50 (“The conventional wireless communication terminal manages incoming/outgoing messages in an in-box and an out-box based on a concept that the message is a kind of a letter. The conventional messaging service provides late response in a communication, compared to an Internet instant messenger.”)

C. LG's Invalidity Claim Charts Demonstrating Invalidity of the Asserted Claims

Exhibits A0-G14 include claim charts showing how a reference or combination of references identified in Sections II.B-E discloses or renders obvious each and every Asserted Claim of each of the Asserted Patents.[6] To the extent any element of an Asserted Claim is deemed not to be exactly disclosed by an item of prior art, then any purported differences are such that the claimed subject matter as a whole would have been obvious to one skilled in the art at the time of the alleged invention, in view of the state of the art and knowledge of those skilled in the art.

In addition, LG identifies and hereby incorporates by reference as if set forth fully herein the prior art references, arguments and evidence set forth in any *inter partes* reviews, covered business method reviews or ex parte reexaminations of the Asserted Patents. LG also incorporates by reference, as if set forth fully herein, all prior art cited during the prosecution of the Asserted Patents. Numerous prior art references, including those identified by LG herein, reflect common knowledge and the state, scope and content of the prior art before the priority dates of the Asserted Patents. *See Graham v. John Deere Co.*, 383 U.S. 1, 35-36 (1966).

Furthermore, to the extent any limitation of an Asserted Claim is deemed not to be exactly disclosed by an item of prior art, then the claim is rendered obvious by combination of the teachings of one prior art item with one or more of the teachings of other items of prior art identified in these disclosures. For example, LG reserves the right to rely on any claim chart in Exhibits A0-G14 standing alone, in combination with the teachings of reference(s) in any other claim chart, in combination with the teachings of any of the references listed in Sections II.B-E,

[6] Exhibits A0-G14 address the preambles of each claim to the extent they are found to be limiting, but LG's identification of such disclosure is not an admission that any such preamble is limiting.

in combination with Applicant's Admitted Prior Art, and/or in view of the knowledge of a person of ordinary skill in the art. In addition, LG reserves the right to rely on any reference listed in Sections II.B-E alone, in combination with the teachings of reference(s) in any claim chart in Exhibits A0-G14, in combination with the teachings of any of the other references listed in Sections II.B-E, in combination with Applicant's Admitted Prior Art, and/or in view of the knowledge of a person of ordinary skill in the art. As it would be unduly burdensome to create detailed claim charts for all of the invalidating combinations, the combinations identified in Exhibits A0-G14 and in Section II.C below are illustrative and not exhaustive. Though these claim charts provide illustrative citations to where each element may be found in the teachings of the prior art references or in their combination, the cited references may contain other disclosures of each claim element as well, and LG reserves the right to argue any claim elements of the Asserted Claims are disclosed in non-cited portions of these references. For at least the reasons described above and below in the examples provided as well as in the claim charts appended hereto, it would have been obvious to one of ordinary skill in the art to combine the teachings of any of a number of prior art references, including any combinations identified in Exhibits A0-G14 or in Section II.C below, to meet the limitations of the asserted claims. As such, LG's inclusion of exemplary combinations, in view of the factors and motivations identified in the following section, should not be understood as limiting LG's contentions to only those specifically identified combinations.

The U.S. Supreme Court decision in *KSR Int'l Co. v. Teleflex Inc., et al.*, 550 U.S. 398, 414-15 (2007) ("*KSR*") held that a claimed invention can be obvious even if there is no explicit, written teaching, suggestion, or motivation for combining the teachings of the prior art to produce that invention. Accordingly, LG believes that no showing of an express motivation to

combine the teachings of the prior art is required to combine the teachings of the references disclosed in Exhibits 1 and A0-G14, as each combination would have no unexpected results, and at most would simply represent a known alternative to one of ordinary skill in the art. *See KSR Int'l Co.*, 550 U.S. at 414-15 (rejecting the Federal Circuit's "rigid" application of the teaching, suggestion, or motivation to combine test, and instead espousing an "expansive and flexible" approach). The Supreme Court in *KSR* held that a person of ordinary skill in the art is "a person of ordinary creativity, not an automaton" and "in many cases a person of ordinary skill in the art will be able to fit the teachings of multiple patents together like pieces of a puzzle." *Id*. at 420-21. "In determining whether the subject matter of a patent claim is obvious, neither the particular motivation nor the avowed purpose of the patentee controls. What matters is the objective reach of the claim." *Id*. at 419. "Under the correct analysis, any need or problem known in the field of endeavor at the time of invention and addressed by the patent can provide a reason for combining the elements in the manner claimed." *Id*. at 420. In particular, the Supreme Court emphasized the principle that "[t]he combination of familiar elements according to known methods is likely to be obvious when it does no more than yield predictable results." *Id*. at 416. A key inquiry is whether the "improvement is more than the predictable use of prior art elements according to their established functions." *Id*. at 417. Similarly, "if a technique has been used to improve one device, and a person of ordinary skill in the art would recognize that it would improve similar devices in the same way, using the technique is obvious unless its actual application is beyond his or her skill." *KSR*, 550 U.S. at 417.

The rationale to combine or modify prior art references is significantly stronger when the references seek to solve the same problem, come from the same field, and correspond well. In *In re Inland Steel Co.*, 265 F.3d 1354 (Fed. Cir. 2001), the Federal Circuit allowed two references

to be combined as invalidating art when "[the prior art] focus[es] on the same problem that the . . . patent addresses. . . . Moreover, both [prior art references] come from the same field. . . . Finally, the solutions to the identified problems found in the two references correspond well." *Id*. at 1362.

Although LG contends that no specific showing of motivation to combine is necessary for the references cited in the attached exhibits, LG hereby identifies specific exemplary motivations and reasons to combine the teachings of the cited art. One or more combinations of the teachings of the prior art references identified herein would have been obvious because these teachings of the references would have been combined using: known methods to yield predictable results; known techniques in the same way; a simple substitution of one known, equivalent element for another to obtain predictable results; or a teaching, suggestion, or motivation in the prior art generally. In addition, it would have been obvious to try combining the teachings of the prior art references identified herein because there were only a finite number of predictable solutions or because known work in one field of endeavor prompted variations based on predictable design incentives or market forces either in the same field or a different one. In addition, the combination of the teachings of the prior art references identified herein would have been obvious because the combinations represent known potential options with a reasonable expectation of success.

Additional evidence that there would have been a motivation to combine the teachings of the prior art references identified in the attached exhibits includes the interrelated teachings of multiple prior art references; the effects of demands known to the design community or present in the marketplace; the existence of a known problem for which there was an obvious solution encompassed by the Asserted Claims; the existence of a known need or problem in the field of

the endeavor at the time of the invention(s); and the background knowledge that would have been possessed by a person of ordinary skill in the art. Thus, a skilled artisan seeking to solve this problem would look to these cited references in combination.

Accordingly, the motivation to combine the teachings of the prior art references disclosed herein is found in the references themselves and: (1) the nature of the problem being solved; (2) the express, implied and inherent teachings of the prior art; (3) the knowledge of persons of ordinary skill in the art; (4) the fact that the prior art is generally directed towards relevant methods and systems; or (5) the predictable results obtained in combining the different elements of the prior art.

Furthermore, a person of ordinary skill at the time of the alleged invention had reason to combine or modify the teachings of one or more of the references listed and charted in Exhibits A0-G14 in light of the knowledge of a person of ordinary skill in the art at the time of the invention and information in the prior art cited herein. The reasons or motivation to combine the teachings of the prior art would include, for example, the fact that the prior art for the asserted claims is in the art of communication systems, and devices and systems for implementing the same, and one of ordinary skill in the art implementing such a device or system in accordance with the asserted claims would be motivated to investigate the various related existing devices, systems, publications or patents identified in these contentions to address the particular needs. Indeed, the claimed subject matter required nothing more than combining prior art elements according to known methods to yield predictable results. One of ordinary skill in the art would have been motivated to combine the prior art, in that it required only simple substitutions of one known element for another to obtain predictable results. Moreover, these references cross-reference and discuss one another, illustrating the close technical relationship among them.

To the extent any piece of prior art refers to or discusses other pieces of prior art, either expressly or inherently, it would have been obvious to combine the teachings of those pieces of prior art for that reason. In addition, design incentives and other market forces would have prompted those combinations and modifications. Furthermore, prior art references may arise from common assignees or multiple companies operating within the relevant subject matter. The motivation to combine references includes the common objectives and subject matter of the identified references. Accordingly, the teachings of the individual prior art references, combined with the industry knowledge of a person of ordinary skill in the art at the time of the alleged invention of the Asserted Patents, would render obvious the asserted claims.

Additionally, several of the references cited in these contentions are, e.g., publications from legal standards organizations such as, e.g., 3GPP. Each of these references is a printed publication, because it was disseminated and otherwise made available to the public, and persons interested and ordinarily skilled in the subject matter or art exercising reasonable diligence would have been able to locate it.

The prior art references relied upon with respect to each of the Asserted Patents is summarized in the tables in the sections further below and is identified in each of Exhibits A0-G14.

1. Identification of Each Item of Prior Art that Anticipates Each Asserted Claim of the ’924 Patent and Each Reference and Combination of References that Renders Obvious the Asserted Claims of the ’924 Patent

The following is an identification of prior art references that, either alone, or in combination with the teachings or knowledge of a person of ordinary skill in the art, the Admitted Prior Art, and/or the additional prior art references discussed below or in Exhibits A0-A7, would have rendered obvious claims 17-19, 22-25, and 28 of the ’924 Patent, including as indicated in the associated claim charts.

Prior Art Patents		
Issued Patent/Patent Publication Number	**Country of Origin**	**Date of Issue/Publication**
CN101272364A (“Zhou-364”)	CN	04.01.2009
CN101399640A (“Zhou-640”)	CN	04.01.2009
CN101594208A (“Peng-208”)	CN	12.02.2009
EP2159950A1 (“Noh-950”)	EP	03.03.2010
KR20080015352A (“Ihm-352”)	KR	02.19.2008
KR20090083834A (“Ko-834”)	KR	08.04.2009
KR20100032806A (“Lee-806”)	KR	03.26.2010
WO2008058112A2 (“Malladi-112”)	WO	05.15.2008
US20080186212A1 (Clerckx-212)	US	08.07.2008
US20090080549A1 (Khan-549)	US	03.26.2009
US20100046461A1 (Wennstrom-461)	US	02.25.2010
US20100074353A1 (Zhou-353)	US	03.25.2010
US20110216846A1 (“Lee-846”); U.S. Provisional Application No. 61/357,534 (“Lee-846-Provisional-534”)	US	09.08.2011
US20110249713A1 (Hammarwall-713)	US	10.13.2011
US20110274188A1 (“Sayana”); U.S. Provisional Application No. 61/331,818 ("Sayana Provisional")	US	11.10.2011
US20130064129A1 (Koivisto-	US	03.14.2013

Prior Art Patents		
Issued Patent/Patent Publication Number	**Country of Origin**	**Date of Issue/Publication**
129)		
US8160125B2 (Clerckx-125)	US	04.17.2012
US8165075 (“Han-075”)	US	04.24.2012
US8189714B2 (Tong-714)	US	05.29.2012
US8457245 (“Ko-245”)	US	06.04.2013
US8639198 (“Liu-198”); U.S. Provisional Application No. 61/360,376 ("Liu-198-Provisional ")	US	01.28.2014
US8724543B2 (Jongren-543)	US	05.13.2014
US8891651B2 (Lee-651)	US	11.18.2014
US8989285 (“Khan-285”)	US	03.24.2015
US9020550B2 (Eriksson-550)	US	04.28.2015
US9178639 (“Lee-639”)	US	11.03.2015
WO2008098225A2 (Kim-225)	WO	08.14.2008
WO2008133582A2 (“Joengren-582”)	WO	11.06.2008
WO2009023863A1 (“Sarkar-863”)	WO	02.19.2009
WO2009025619A2 (“Goeransson-619”)	WO	02.26.2009
WO2010050689A2 (“Lee-689”)	WO	05.06.2010
WO2010071369A2 (“Lee-369”)	WO	06.24.2010

Prior Art Publications			
Author	**Title**	**Date of Publication**	**Publisher**
IEEE	IEEE Standard for Local and metropolitan area networks - Part 16: Air Interface for Fixed Broadband Wireless Access Systems ("802.16-2004")	2004	IEEE
IEEE	IEEE Standard for Local and metropolitan area networks - Part 16: Air Interface for Broadband Wireless Access Systems ("802.16-2009")	2009	IEEE
IEEE	IEEE Standard for Local and metropolitan area networks - Part 16: Air Interface for Fixed and Mobile Broadband Wireless Access Systems, Amendment 2: Physical and Medium Access Control Layers for Combined Fixed and Mobile Operation in Licensed Bands and Corrigendum 1 ("802.16e-2005")	2006	IEEE
David J. Love et al.	Grassmannian Beamforming for Multiple-Input Multiple-OutputWireless	2003	IEEE

Prior Art Publications			
Author	**Title**	**Date of Publication**	**Publisher**
	Systems		
Quentin H. Spencer et al.	An Introduction to the Multi-User MIMO Downlink	2004	IEEE
Vasanthan Raghavan et al.	Near-Optimal Codebook Constructions for Limited Feedback Beamforming in Correlated MIMO Channels with Few Antennas	2006	IEEE
Ericsson et al.	R1-101683, Way Forward for Rel-10 Feedback Framework	2010	3GPP Organizational Partners (ARIB, CWTS, ETSI, T1, TTA, TTC)
Alcatel-Lucent et al.	R1-102579, Way forward on Rel. 10 feedback, RAN WG1	2010	3GPP Organizational Partners (ARIB, CWTS, ETSI, T1, TTA, TTC)
Ericsson et al.	R1-102630, Refinements of Feedback and Codebook Design	2010	3GPP Organizational Partners (ARIB, CWTS, ETSI, T1, TTA, TTC)
Texas Instruments	R1-102823, 8Tx Codebook Design	2010	3GPP Organizational Partners (ARIB, CWTS, ETSI, T1, TTA, TTC)
Samsung	R1-103026, Views on the feedback framework for Rel. 10	2010	3GPP Organizational Partners (ARIB, CWTS, ETSI, T1, TTA, TTC)
Ericsson et al.	R1-103332, Way Forward on UE Feedback	2010	3GPP Organizational Partners (ARIB, CWTS, ETSI, T1, TTA, TTC)
Ericsson et al.	R1-103333, Refinements of	2010	3GPP Organizational Partners (ARIB,

Prior Art Publications			
Author	**Title**	**Date of Publication**	**Publisher**
	Feedback and Codebook Design		CWTS, ETSI, T1, TTA, TTC)
Alcatel-Lucent et al.	R1-103419, Way-forward on CSI Feedback Design for Rel-10 DL MIMO	2010	3GPP Organizational Partners (ARIB, CWTS, ETSI, T1, TTA, TTC)
Texas Instruments	R1-103701, 8Tx Codebook Design	2010	3GPP Organizational Partners (ARIB, CWTS, ETSI, T1, TTA, TTC)
Nokia et al.	R1-103805, Double codebook performance evaluation	2010	3GPP Organizational Partners (ARIB, CWTS, ETSI, T1, TTA, TTC)
3GPP	Universal Mobile Telecommunications System (UMTS); Radio Resource Control (RRC); Protocol specification (3GPP TS 25.331 version 9.1.0 Release 9	2010	3GPP Organizational Partners (ARIB, CWTS, ETSI, T1, TTA, TTC)
3GPP	LTE; Evolved Universal Terrestrial Radio Access (E-UTRA); Physical layer procedures (3GPP TS 36.213 version 8.8.0 Release 8)	2009	3GPP Organizational Partners (ARIB, CWTS, ETSI, T1, TTA, TTC)
3GPP	LTE; Evolved Universal Terrestrial Radio Access (E-UTRA); Radio Resource Control (RRC); Protocol specification (3GPP TS 36.331 version	2010	3GPP Organizational Partners (ARIB, CWTS, ETSI, T1, TTA, TTC)

Prior Art Publications			
Author	**Title**	**Date of Publication**	**Publisher**
	8.8.0 Release 8)		
3GPP	LTE; Evolved Universal Terrestrial Radio Access (E-UTRA); Medium Access Control (MAC) protocol specification (3GPP TS 36.321 version 8.8.0 Release 8)	2010	3GPP Organizational Partners (ARIB, CWTS, ETSI, T1, TTA, TTC)
3GPP	LTE; Evolved Universal Terrestrial Radio Access (E-UTRA) and Evolved Universal Terrestrial Radio Access Network (E-UTRAN); Overall description; Stage 2 (3GPP TS 36.300 version 8.7.0 Release 8)	2009	3GPP Organizational Partners (ARIB, CWTS, ETSI, T1, TTA, TTC)
3GPP	LTE; Evolved Universal Terrestrial Radio Access (E-UTRA); Physical layer – Measurements (3GPP TS 36.214 version 8.7.0 Release 8)	2009	3GPP Organizational Partners (ARIB, CWTS, ETSI, T1, TTA, TTC)
3GPP	LTE; Evolved Universal Terrestrial Radio Access (E-UTRA); Radio Resource Control (RRC); Protocol specification (3GPP TS 36.331 version 9.1.0 Release 9)	2010	3GPP Organizational Partners (ARIB, CWTS, ETSI, T1, TTA, TTC)
3GPP	LTE; Evolved	2009	3GPP Organizational

Prior Art Publications			
Author	**Title**	**Date of Publication**	**Publisher**
	Universal Terrestrial Radio Access (E-UTRA); Physical channels and modulation (3GPP TS 36.211 version 8.8.0 Release 8)		Partners (ARIB, CWTS, ETSI, T1, TTA, TTC)

LG contends that, as set forth below, these references disclose and at least render obvious the Asserted Claims of the ’924 Patent. LG further contends that claims that are anticipated by a particular reference are also rendered obvious by that same reference alone, or in combination with the teachings of other references. Additional information about public accessibility and prior art dates are set forth in Exhibits A0-G14. LG reserves the right to claim priority to an earlier date.

Prior Art Anticipating, and/or Rendering Obvious Asserted Claims of the ’924 Patent	
Primary Reference (Anticipation and Obviousness)	**Alternatively, Obviousness in View of, E.g., one or more of:**
Ko-245	APA, Koivisto-129, Lee-651, Lee-689, Lee-846, Liu-198, Sayana, Lee-806, Göransson-619, Jongren-543, Lee-639, Khan-285, TS 36.213 v8.8.0, R1-101683, R1-102579, R1-103332, R1-103419, 802.16e-2005
Koivisto-129	APA, Ko-245, Lee-651, Lee-689, Lee-846, Liu-198, Sayana, Lee-806, Göransson-619, Jongren-543, Lee-639, Khan-285, TS 36.213 v8.8.0, R1-101683, R1-102579, R1-103332, R1-103419, 802.16e-2005
Lee-651	APA, Ko-245, Koivisto-129, Lee-689, Lee-846, Liu-198, Sayana, Lee-806, Göransson-619, Jongren-543, Lee-639, Khan-285, TS 36.213 v8.8.0, R1-101683, R1-102579, R1-103332, R1-103419, 802.16e-2005
Lee-689	APA, Ko-245, Koivisto-129, Lee-651, Lee-846, Liu-198, Sayana, Lee-806, Göransson-619, Jongren-543, Lee-639, Khan-285, TS 36.213 v8.8.0, R1-101683, R1-102579, R1-103332, R1-103419, 802.16e-2005
Lee-846	APA, Ko-245, Koivisto-129, Lee-651, Lee-689, Liu-198, Sayana, Lee-806, Göransson-619, Jongren-543, Lee-639,

Prior Art Anticipating, and/or Rendering Obvious Asserted Claims of the ’924 Patent	
Primary Reference (Anticipation and Obviousness)	**Alternatively, Obviousness in View of, E.g., one or more of:**
	Khan-285, TS 36.213 v8.8.0, R1-101683, R1-102579, R1-103332, R1-103419, 802.16e-2005
Liu-198	APA, Ko-245, Koivisto-129, Lee-651, Lee-689, Lee-846, Sayana, Lee-806, Göransson-619, Jongren-543, Lee-639, Khan-285, TS 36.213 v8.8.0, R1-101683, R1-102579, R1-103332, R1-103419, 802.16e-2005
Sayana	APA, Ko-245, Koivisto-129, Lee-651, Lee-689, Lee-846, Liu-198, Lee-806, Göransson-619, Jongren-543, Lee-639, Khan-285, TS 36.213 v8.8.0, R1-101683, R1-102579, R1-103332, R1-103419, 802.16e-2005

A person of ordinary skill in the art would have been motivated and had a reasonable expectation of success to make these combinations because, for example, each would have been merely: (a) a combination of prior art elements according to known methods to yield predictable results; (b) a simple substitution of one known element for another to obtain predictable results; (c) a use of a known technique to improve similar devices in the same way; (d) application of a known technique to a known device ready for improvement to yield predictable results; (e) obvious to try; and/or (f) known work in one field of endeavor prompting variations of it for use in either the same field or a different one based on design incentives or other market forces since the variations are predictable to one of ordinary skill in the art.

Additionally, a POSITA, at the time of the Claimed Priority Date, would have been motivated to combine the teachings of these references, *e.g.*, as set forth in Exhibits A0-A7. The ’924 Patent states that the “present invention relates to a wireless communication system, and more particularly, to a wireless communication system that uses multiple input multiple output (MIMO) in both a transmitting end and a receiving end..” *E.g.*, ’924 Patent, 1:19-22. Similar to the ’924 Patent, the cited references relate, directly or indirectly, to a wireless communication system that uses multiple input multiple output (MIMO) via multiple antennas. *See, e.g.*, Exhibits A0-A7; Ko-245 at 3:5-7 (“The present invention provides a method capable of reducing

a transfer amount of control information while ensuring scheduling efficiency in a multiple antenna system."); Koivisto-129 at [0006] ("Both eight-transmit downlink multi-input/multi-output ("MIMO") and enhanced multi-user multi-input/multi-output ("MU-MIMO") are now agreed to be part of a Rel-10 work item on enhanced downlink MIMO transmission."); Lee-651 at Abstract ("The device comprises a processor which is connected with the M antennas and which is formed so as to generate data to be transmitted through the M antennas, on the basis of a precoding matrix"); Lee-689 at 1:10-13 ("Multi-Input Multi-Output (MIMO) technology improves efficiency of data transmission and receipt using a multiple transmission antenna and a multiple receipt antenna."); Lee-846 at [0006] ("Generally, a MIMO system which performs precoding in order to minimize complexity and control signaling overhead uses a codebook based precoding scheme."); Liu-198 at 4:4-6 ("FIG. 3 illustrates a 4×4 multiple-input, multiple-output (MIMO) system according to an embodiment of the disclosure"); Sayana at [0003] ("Precoding operations can be in the context of single-user multiple input multiple output (SU-MIMO) or multi-user MIMO (MU-MIMO), where two or more users are served by a single base station"); Lee-806; Göransson-619; Jongren-543; Lee-639; Khan-285; TS 36.213 v8.8.0; R1-101683; R1-102579; R1-103332; R1-103419; 802.16e-2005. Accordingly, each of these references relate to the same field of endeavor and/or address the same or a similar problem as the inventors of the '924 Patent, and a POSITA would have been motivated—and would have found it straightforward and obvious—to combine their teachings, with a reasonable expectation of success, in a matter that meets each element of the Asserted Claims of the '924 Patent.

(a) Codebook Subset Restriction References

As set forth in Exhibits A0-A7, each of the Codebook Subset Restriction References (e.g., Ko-245, Koivisto-129, Lee-651, Lee-689, Lee-846, Liu-198, Sayana; and Göransson-619, Jongren-543, Lee-639, Khan-285, R1-101683, R1-103332, R1-102579, R1-103419, TS 36.213

v8.8.0, 802.16e-2005) anticipates and alternatively renders obvious the Asserted Claims of the ’924 Patent.

Alternatively, a POSITA would have been motivated—and would have found it straightforward and obvious—to modify the teachings of each of the Codebook Subset Restriction References with the teachings of any of the other Codebook Subset Restriction References. Each of these references are directed to wireless MIMO systems that apply precoding (e.g., based on one of several possible precoding matrices) to data to improve wireless transmissions between MIMO devices. *See, e.g.*, Ko-245 at Abstract (“A method of transmitting precoding information in a multiple antenna system”), Koivisto-129 at [0030] (“The processor 520 in the communication element 510, which may be implemented with one or a plurality of processing devices, performs functions associated with its operation including, without limitation, precoding of antenna gain/phase parameters (precoder 521)”), Lee-651 at Abstract (“The device comprises a processor which is connected with the M antennas and which is formed so as to generate data to be transmitted through the M antennas, on the basis of a precoding matrix”), Lee-689 at 4:2-5 (“As previously stated above, the related art has a problem that signal receipt performance of a receiver is depreciated because of the interference of precoding matrixes of neighbor cells.”), Lee-846 at [0003] (“The present invention relates to a wireless communication system, and more particularly, to a method and apparatus for indicating a precoding matrix for use in downlink data.”), Liu-198 at Abstract (“The feedback values include a first precoder matrix indicator (PMI1) value and a second precoder matrix indicator (PMI2) value.”), and Sayana at Abstract (“the base station obtaining a precoder from the first representation and the second representation.”). Moreover, each of the references teaches how to improve efficiency and reliability of a wireless system by restricting the set of precoding

matrices that is used for communications between a base station and user equipment. For example, the Codebook Subset Restriction References teach techniques for indicating which entries of a codebook of precoding matrices (also referred to as "precoders")[7] are selectable by a receiving device (e.g., a user device) to feedback to a transmitting device (e.g., a base station) based on the wireless channel. *See, e.g.*, Lee-689 at 15:16-19 ("The transmitter receives the information of first precoding matrixes indexes or the information of second precoding matrixes indexes from a receiver or a transmitter of neighbor cells."). The use of Codebook Subset Restriction also helps to reduce overhead in communications. *See, e.g.*, Lee-689 at 7:4-6 ("Third, since base codebook subsets are generated previously and a transmitter transmits an index of a base codebook subset to a receiver, overhead is reduced."). As another example, providing codebook subset restriction helps facilitate interoperability of devices that are both operating with precoding matrices suitable for the wireless channel. A POSITA therefore would have found the combination of the teachings of the Codebook Subset Restriction References to be straightforward application of known techniques applied for their intended purpose in order to address a known problem.

A POSITA would have expected success in modifying the Codebook Subset Restriction References as described above. These combinations of prior art references would have involved no more than the predictable use of prior art elements according to their established functions in a known manner, as reflected by, e.g., the teachings cited in Exhibits A0-A7; *see also* Lee-846 at

[7] Some references use the term "precoder" and "precoding matrix" to both refer to a precoding matrix that is used by a precoder within a BS. For example, Khan-285 teaches that wireless devices (e.g., a BS and UE) share "a set of precoding matrices (i.e., codewords)," and provides examples of such precoding matrices (e.g., a "Fourier Matrix" or a "Householder" matrix), and refers to such precoding matrices as "precoders." Khan-285, 5:4-6:42, 6:43-54, 6:64-67, Table 1.

[0003]-[0010]; Liu-198 at 1:26-2:61. A POSITA would thus have had a reasonable expectation in success in combining the teachings of these references, yielding the Asserted Claims of the ’924 Patent.

(b) Bitmap Indication References

As set forth in Exhibits A0-A7, each of the Bitmap Indication References (e.g., Lee-651, Lee-689, and Göransson-619, Jongren-543, Lee-639, Khan-285, TS 36.213 v8.8.0, 802.16e-2005) anticipates and alternatively renders obvious the Asserted Claims of the ’924 Patent.

Alternatively, a POSITA would have been motivated—and would have found it straightforward and obvious—to modify the teachings of each of the Bitmap Indication References with the teachings of any of the other Bitmap Indication References. Each of these references are directed to using bitmaps to indicate precoding matrices available for selection by wireless communication devices in a wireless MIMO system. *See, e.g.*, Lee-651 at 19:49-20:3 (“a bitmap format may be used to indicate whether each matrix constituting the codebook can be used”), Lee-689 at 18:5-15 (“A base codebook subset indication can be expressed by bitmap”), Göransson-619 at [0030] (“codebook subset restrictions (CBSSRs) can be signaled to a UE 14 using a bitmap mask”), Jongren-543 at 7:62-8:11 (“configuration request may e.g. comprise a bit map where each bit represents a certain information alternative and where a bit value of one would mean include in subset and a bit value of zero would mean exclude in subset. 203”), Lee-639 at 14:43-55 (“each precoding vector/matrix is configured to be turned on/off by using a 64-bit bitmap”), Khan-285 at 2:33-44 (“A bitmap may be defined for each of the subset.”), TS 36.213 v8.8.0 at §7.2 (“A UE is restricted to report PMI and RI within a precoder codebook subset specified by a bitmap parameter codebookSubsetRestriction”), 802.16e-2005 at Table 298a, Table 298f, Table 298i (“Reduced precoding matrix codebook”). The use of bitmaps provides granularity and flexibility in implementing codebook restriction methods in MIMO

wireless networks. For example, the Bitmap Indication References teach techniques for providing flexibility in deploying different combinations of precoding matrices. *See, e.g.*, Khan-285 at 9:1-5 ("Note that the bit map approach in this embodiment allows dynamically constructing a subset by picking any precoders for the subset."). For example, by using a bitmap approach, a wireless communication system can exclude the use of precoding matrices which may cause interference other wireless networks, and include precoding matrices that are suitable for the conditions of a wireless channel between a base station and user equipment.

Additionally, a POSITA would have been motivated to further modify each of the Bitmap Indication References with the teachings of any of the Codebook Subset Restriction References. For example, each of the Codebook Subset Restriction References teaches how to communicate a reduced set of precoding matrices from a transmitting device (e.g., a base station) to a receiving device (e.g., a user equipment). The Bitmap Indication References provide a way to implement Codebook Subset Restriction that provides flexibility to dynamically select a set of precoding matrices to adapt to changing channel conditions. *See, e.g.*, Khan-285 at 9:1-5 ("Note that the bit map approach in this embodiment allows dynamically constructing a subset by picking any precoders for the subset.").

A POSITA would have expected success in modifying the Bitmap Indication References as described above. These combinations of prior art references would have involved no more than the predictable use of prior art elements according to their established functions in a known manner, as reflected by, e.g., the teachings cited in Exhibits A0-A7; *see also* Lee-846 at [0003]-[0010]; Liu-198 at 1:26-2:61. A POSITA would thus have had a reasonable expectation in success in combining the teachings of these references, yielding the Asserted Claims of the '924 Patent.

(c) Dual Codebook References

As set forth in Exhibits A0-A7, each of the Dual Codebook References (e.g., Ko-245, Koivisto-129, Lee-651, Lee-846, Liu-198, Sayana, and Lee-806, R1-101683, R1-103332, R1-102579, and R1-103419) anticipates and alternatively renders obvious the Asserted Claims of the '924 Patent.

Alternatively, a POSITA would have been motivated—and would have found it straightforward and obvious—to modify the teachings of each of the Dual Codebook References with the teachings of any of the other Dual Codebook References. Each of these references are directed to systems that apply multiple types of precoding to data to address multiple types of variation (e.g., short term, subband variations, and long term wideband variations) in wireless communication channels between devices. *See e.g.*, Ko-245 at [0031] ("The best band PMI is called PMI #B. And another PMI for the entire band can be used. The PMI of the entire band is called PMI #A."), Koivisto-129 at [0071] ("as the matrix W1 exploits wideband/long-term properties of the communication channel, reporting of the matrix W1 can be made with a lower time periodicity, while the matrix W2 refinement can be sent with a higher time periodicity"), Lee-651 at 14:9-36 ("Q1,Nt×R(k) denotes a 1st element matrix, Q2,Nt×R(k) denotes a 2nd element matrix, w1(k) denotes a 1st weighting matrix, and w2(k) denotes a 2nd weighting matrix."), Lee-846 at [0128] ("n_c and m_c may indicate the size of a W codebook containing W matrices and the size of a P codebook containing P matrices, respectively"), Liu-198 at 2:11-26 ("A precoder for a subband is composed of two matrices … The two codebook indices together determine the precoder. One of the two matrices targets the wideband or long-term channel properties. The other matrix targets the frequency-selective or short-term channel properties."), Sayana at [0085] ("enabling codebook subset restrictions at wideband and subband level"), and Lee-806 at [0044] ("the base station receiving information on Q and V from the terminal may

precode and transmit a downlink signal using a precoding matrix (P) generated from Q*V"), R1-101683 at p.2 ("A precoder for a subband is composed of two matrices"), R1-102579 at p.2 ("A precoder W for a subband is a function of two matrices W1 and W2"), R1-103332 at p.2 ("A precoder W for a subband is obtained as a matrix multiplication of the two matrices"), and R1-103419 ("W1 and W2"). When the precoding matrices from the various codebooks are combined to form precoders used in the MIMO wireless communication systems, they form pairs of precoding matrices.

Additionally, a POSITA would have been motivated to further modify each of the Dual Codebook References with the teachings of any of the Codebook Subset Restriction References. For example, each of the Codebook Subset Restriction References teaches how to reduce overhead in feedback, for example by indicating a subset of precoding matrices that are available for wireless communications between a base station and user equipment. The Codebook Subset Restriction References provide methods for restriction precoding matrices used to generate the precoders for wireless communications between the devices. The reduction in overhead leads to improved performance in wireless communication systems, and moreso with devices having multiple matrix components. *See, e.g.*, Khan-285 at 9:1-5 ("Note that the bit map approach in this embodiment allows dynamically constructing a subset by picking any precoders for the subset.").

Additionally, a POSITA would have been motivated to further modify each of the Dual Codebook References with the teachings of any of the Codebook Subset Restriction References and/or the Bitmap Indication References. For example, each of the Codebook Subset Restriction References teaches how to reduce overhead in feedback of precoding matrices, and provides flexibility for wireless communication systems to determine precoding matrices that reduce

interference to other nearby wireless communication systems. *See, e.g.*, Lee-689 at 15:16-19 ("The transmitter receives the information of first precoding matrixes indexes or the information of second precoding matrixes indexes from a receiver or a transmitter of neighbor cells.").

A POSITA therefore would have been motivated to apply these teachings, yielding a system in which, e.g., two codebooks (e.g., a first codebook and a second codebook) are used by a transmitting device to precode information transmitted to a receiving device, and codebook subset restriction information is used to reduce overhead of feedback of indicated precoding matrices for the first precoder and the second precoder, respectively, in order to advantageously improve efficiency of wireless communications between devices such as a mobile phone and a base station. Pairs of precoding matrices from codebooks are used to form precoders used in wireless communications. The restriction of precoding matrices from a codebook precludes certain pairs of precoding matrices from being formed with the restricted precoding matrices.

A POSITA would have expected success in modifying the Two Precoder References as described above, and would have looked to each of these other references, with related and complementary disclosures, for additional advantageous teachings when implementing the precoding processes taught by the Two Precoder References. These combinations of prior art references would have involved no more than the predictable use of prior art elements according to their established functions in a known manner, as reflected by, e.g., the teachings cited in Exhibits A0-A7; *see also* Lee-846 at [0003]-[0010]; Liu-198 at 1:26-2:61. A POSITA would thus have had a reasonable expectation in success in combining the teachings of these references, yielding the Asserted Claims of the '924 Patent.

(d) Uplink Feedback Information Interval References

As set forth in Exhibits A0-A7, each of the Uplink Feedback Information Interval References (e.g., Ko-245, Koivisto-129, Lee-651, Lee-846, Liu-198, Sayana, and Lee-806, R1-

101683, R1-103332, R1-102579, and R1-103419) anticipates and alternatively renders obvious the Asserted Claims of the ’924 Patent.

Alternatively, a POSITA would have been motivated—and would have found it straightforward and obvious—to modify the teachings of each of the Uplink Feedback Information Interval References with the teachings of any of the other Uplink Feedback Information Interval References. Each of these references is directed to wireless MIMO systems in which a transmitting device uses at least two of several precoding matrices from one or more codebooks to precode information that is transmitted to a receiving device. *See e.g.*, Ko-245 at [0031] (“The best band PMI is called PMI #B. And another PMI for the entire band can be used. The PMI of the entire band is called PMI #A.”), Koivisto-129 at [0071] (“as the matrix W1 exploits wideband/long-term properties of the communication channel, reporting of the matrix W1 can be made with a lower time periodicity, while the matrix W2 refinement can be sent with a higher time periodicity”), Lee-651 at 14:9-36 (“Q1,Nt×R(k) denotes a 1st element matrix, Q2,Nt×R(k) denotes a 2nd element matrix, w1(k) denotes a 1st weighting matrix, and w2(k) denotes a 2nd weighting matrix.”), Lee-846 at [0128] (“n_c and m_c may indicate the size of a W codebook containing W matrices and the size of a P codebook containing P matrices, respectively”), Liu-198 at 2:11-26 (“A precoder for a subband is composed of two matrices … The two codebook indices together determine the precoder. One of the two matrices targets the wideband or long-term channel properties. The other matrix targets the frequency-selective or short-term channel properties.”), Sayana at [0085] (“enabling codebook subset restrictions at wideband and subband level”), and Lee-806 at [0044] (“the base station receiving information on Q and V from the terminal may precode and transmit a downlink signal using a precoding matrix (P) generated from Q*V”), R1-101683 at p.2 (“A precoder for a subband is composed of two

matrices"), R1-102579 at p.2 ("A precoder W for a subband is a function of two matrices W1 and W2"), R1-103332 at p.2 ("A precoder W for a subband is obtained as a matrix multiplication of the two matrices"), and R1-103419 ("W1 and W2"). The receiving device provides feedback of precoding matrices indicated to the transmitting device for use in a subsequent transmission. *See e.g.*, Ko-245 at [0051] ("In the Best-M CQI assisted scheme, the average CQI and PMI #B of the best band may be transmitted for the best band, and the average CQI and PMI #A of the remaining bands may be transmitted for the unselected band."), Koivisto-129 at [0069] ("The user equipment transmits the index of the selected matrix W1 as well as the indices of the selected matrices W2 to the base station (e.g., the double codebook format)"), Lee-651 at 19:13-34 ("Each of the 1st CSI and the 2nd CSI may be transmitted periodically or non-periodically."), Lee-846 at [0134] ("assuming that W is a codebook for long-term/wideband precoding and P is a codebook for short-term/subband precoding, i1 may be fed back for a wideband at a long-term interval and i2 may be fed back for a subband at a short-term interval."), Liu-198 at 2:49-55 ("two codebook indices in Release 10 may be sent in different subframes or in the same subframe."), Sayana at [0006] ("One of the components representing the correlated channel characteristics can be fed back on a wideband basis and/or slowly in time, while the other component is fed back on a subband basis and/or more frequently in time."), and Lee-806 at [0044] ("the base station receiving information on Q and V from the terminal may precode and transmit a downlink signal using a precoding matrix (P) generated from Q*V"), R1-101683 at p.2 ("One of the two matrices targets wideband and/or long-term channel properties"), R1-102579 at p.2 ("feedback corresponding to W1 and W2 can be sent in different or the same subframe"), R1-103332 at p.2 ("A precoder W for a subband is obtained as a matrix multiplication of the two matrices"), and R1-103419 ("Aperiodic PUSCH" and "Periodic

PUCCH"). The feedback advantageously helps the transmitting device to adjust its precoding to adapt to wireless channel conditions. Transmitting the feedback at different intervals further advantageously provides flexibility in adjust how often feedback is provided, depending on how quickly or slowly different aspects of the wireless communications channel changes. *See e.g.*, Ko-245 at [0027] ("Feedback data may be transmitted periodically or at the request of a base station."), Koivisto-129 at [0071] ("as the matrix W1 exploits wideband/long-term properties of the communication channel, reporting of the matrix W1 can be made with a lower time periodicity, while the matrix W2 refinement can be sent with a higher time periodicity"), Lee-651 at 19:13-34 ("Each of the 1st CSI and the 2nd CSI may be transmitted periodically or non-periodically."), Lee-846 at [0134] ("assuming that W is a codebook for long-term/wideband precoding and P is a codebook for short-term/subband precoding, i1 may be fed back for a wideband at a long-term interval and i2 may be fed back for a subband at a short-term interval."), Liu-198 at 2:49-55 ("two codebook indices in Release 10 may be sent in different subframes or in the same subframe."), Sayana at [0006] ("One of the components representing the correlated channel characteristics can be fed back on a wideband basis and/or slowly in time, while the other component is fed back on a subband basis and/or more frequently in time."), and R1-101683 at p.2 ("One of the two matrices targets wideband and/or long-term channel properties"), R1-102579 at p.2 ("feedback corresponding to W1 and W2 can be sent in different or the same subframe"), R1-103332 at p.2 ("A precoder W for a subband is obtained as a matrix multiplication of the two matrices"), and R1-103419 ("Aperiodic PUSCH" and "Periodic PUCCH").

Additionally, a POSITA would have been motivated to further modify each of the Uplink Feedback Information Interval References with the teachings of any of the Codebook Subset

Restriction References. For example, each of the Codebook Subset Restriction References teaches how to reduce overhead in feedback; such overhead reduction is advantageous when providing feedback for multiple precoding matrices in a dual codebook system. The Uplink Feedback Information Interval References teach providing feedback at different intervals that would match different time scales of channel characteristics (e.g., short term or subband characteristics, or long term or wideband characteristics).

Additionally, a POSITA would have been motivated to further modify each of the Uplink Feedback Information Interval References with the teachings of any of the Codebook Subset Restriction References and/or the Bitmap Indication References. For example, each of the Codebook Subset Restriction References teaches how to reduce overhead in feedback; such overhead reduction is advantageous when providing feedback for multiple precoding matrices in a dual codebook system. The Bitmap Indication References provide a way of implementing Codebook Subset Restriction. The Uplink Feedback Information Interval References teach providing feedback at different intervals that would match different time scales of channel characteristics (e.g., short term or subband characteristics, or long term or wideband characteristics).

Additionally, a POSITA would have been motivated to further modify each of the Uplink Feedback Information Interval References with the teachings of any of the Codebook Subset Restriction References, the Bitmap Indication References and/or the Dual Codebook References. For example, each of the Codebook Subset Restriction References teaches how to reduce overhead in feedback; such overhead reduction is advantageous when providing feedback for multiple precoding matrices in a dual codebook system. The Bitmap Indication References provide a way of implementing Codebook Subset Restriction. The Dual Codebook references

describe various codebooks that are tailored to different channel characteristics having different time scales. The Uplink Feedback Information Interval References teach providing feedback at different intervals that would match different time scales of channel characteristics (e.g., short term or subband characteristics, or long term or wideband characteristics).

A POSITA therefore would have been motivated to apply these teachings, yielding a system in which at least two precoding matrices are selected from two codebooks are used by a transmitting device to precode information transmitted to a receiving device. Codebook subset restriction information in the form of a bitmap is used to restrict selections of precoding matrices to those appropriate for channel conditions, and/or to reduce interference to neighboring cells. The codebook subset restriction also reduces overhead of feedback by reducing the amount of feedback to advantageously improve efficiency of wireless communications between devices such as a mobile phone and a base station. A POSITA would have further been motivated to apply the teachings of the different intervals, such that feedback indicating a precoding matrix for the first precoder is provided at a different interval than feedback indicating a precoding matrix for the second precoder in order to provide flexibility to transmit the respective indications on time scales appropriate to channel variations address by the respective precoding matrix. For example, providing feedback indicating a precoding matrix too often to a transmitting device could cause the transmitting device to consume computing resources to evaluate an indication that is not needed in view of slowly changing channel conditions.

A POSITA would have expected success in modifying the Uplink Feedback Information Interval References as described above, and would have looked to each of these other references, with related and complementary disclosures, for additional advantageous teachings when implementing the wireless communication processes of the Codebook Subset Restriction

References, Bitmap Indication References and/or Dual Codebook References. These combinations of prior art references would have involved no more than the predictable use of prior art elements according to their established functions in a known manner, as reflected by, e.g., the teachings cited in Exhibits A0-A7; *see also* Lee-846 at [0003]-[0010]; Liu-198 at 1:26-2:61. A POSITA would thus have had a reasonable expectation in success in combining the teachings of these references, yielding the Asserted Claims of the ’924 Patent.

2. Identification of Each Item of Prior Art that Anticipates Each Asserted Claim of the ’545 Patent and Each Reference and Combination of References that Renders Obvious the Asserted Claims of the ’545 Patent

The following is a list of prior art references that, either alone, or in combination with the teachings or knowledge of a person of ordinary skill in the art, the Admitted Prior Art, and/or the additional prior art references discussed below or in Exhibits B0–B5, would have rendered obvious claims 2 and 3 of the ’545 Patent, including as indicated in the associated claim charts.

Prior Art Patents		
Issued Patent/Patent Publication Number	**Country of Origin**	**Date of Issue/Publication**
CN101640922A (“Peng-922”)	CN	02.03.2010
EP1091601A2 (“Sivula-601”)	EP	04.11.2001
EP2112855A2 (“Ito-855”)	EP	10.28.2009
EP2124488A1 (“Yamada-488”)	EP	11.25.2009
EP2148517A1 (“Harada-517”)	EP	01.27.2010
GB2462011A (“Park-011”)	GB	01.27.2010
US Patent No. 20070184865A1 (“Phan-865”)	US	08.09.2007

Prior Art Patents		
Issued Patent/Patent Publication Number	**Country of Origin**	**Date of Issue/Publication**
WO2009038300A1 (“Lee-300”)	WO	03.26.2009
WO2009084998A1 (“Amirijoo-998”)	WO	07.09.2009
US20110158116A1 ("Tenny"); US. Provisional Application No. 61/218,769 ("Tenny Provisional")	US	06.30.2011
US2007184865A1 ("Phan-865")	US	08.09.2007
US20120008600A1 ("Marinier"); U.S. Provisional Application No. 61/293,271 ("Marinier Provisional")	US	01.12.2012
WO2009154102A1 ("Kato-102")	WO	12.23.2009
CN101640922A (“ZTE”) and certified English Translation thereof	CN	02.03.2010
EP2112855A2 (“Fujitsu”)	EP	10.28.2009
US7627325 (“McCoy”)	US	12.01.2009
US8467793 (“Dalsgaard”)	US	06.18.2013

Prior Art Publications			
Author	**Title**	**Date of Publication**	**Publisher**
3GPP	3GPP TS 36.300 v8.11.0 (2009-12)	2009	3GPP Organizational Partners (ARIB, ATIS, CCSA, ETSI, TTA, TTC)
3GPP	3GPP TS 36.331 v9.0.0 (2009-09)	2009	3GPP Organizational Partners (ARIB, ATIS, CCSA, ETSI, TTA, TTC)

Prior Art Publications			
Author	**Title**	**Date of Publication**	**Publisher**
3GPP	3GPP TR 36.912 v9.1.0 (2009-12)	2009	3GPP Organizational Partners (ARIB, ATIS, CCSA, ETSI, TTA, TTC)
Nokia Corporation	R2-095898 RACH and carrier aggregation (Nokia) ("Nokia Corporation")	2009	3GPP Organizational Partners (ARIB, ATIS, CCSA, ETSI, TTA, TTC)
Huawei	R2-100110 Multiple Timing Advance Impact (Huawei)	2010	3GPP Organizational Partners (ARIB, ATIS, CCSA, ETSI, TTA, TTC)
Qualcomm	R2-100423 Supporting multiple timing advance groups (Qualcomm)	2009	3GPP Organizational Partners (ARIB, ATIS, CCSA, ETSI, TTA, TTC)

LG contends that, as set forth below, these references disclose and at least render obvious the Asserted Claims of the ’545 patent. LG further contends that claims that are anticipated by a particular reference are also rendered obvious by that same reference alone, or in combination with the teachings of other references.

Prior Art Anticipating, and/or Rendering Obvious Asserted Claims of the ’545 Patent	
Primary Reference (Anticipation and Obviousness)	**Alternatively, Obviousness in View of, E.g.:**
Huawei	Wireless Network APA, 3GPP APA, Fujitsu, Marinier, Nokia, Qualcomm, Tenny, TR36.912, TS 36.300, TS 36.331, ZTE
Marinier	Wireless Network APA, 3GPP APA, Fujitsu, Huawei, Nokia, Qualcomm, Tenny, TR36.912, TS 36.300, TS 36.331, ZTE
Nokia	Wireless Network APA, 3GPP APA, Fujitsu, Huawei, Marinier, Qualcomm, Tenny, TR36.912, TS 36.300, TS 36.331, ZTE
Qualcomm	Wireless Network APA, 3GPP APA, Fujitsu,

Prior Art Anticipating, and/or Rendering Obvious Asserted Claims of the ’545 Patent	
Primary Reference (Anticipation and Obviousness)	**Alternatively, Obviousness in View of, E.g.:**
	Huawei, Marinier, Nokia, Tenny, TR36.912, TS 36.300, TS 36.331 ZTE
Tenny	Wireless Network APA, 3GPP APA, Fujitsu, Huawei, Marinier, Nokia, Qualcomm, TR36.912, TS 36.300, TS 36.331, ZTE

A person of ordinary skill in the art would have been motivated and had a reasonable expectation of success to make these combinations because, for example, each would have been merely: (a) a combination of prior art elements according to known methods to yield predictable results; (b) a simple substitution of one known element for another to obtain predictable results; (c) a use of a known technique to improve similar devices in the same way; (d) application of a known technique to a known device ready for improvement to yield predictable results; (e) obvious to try; and/or (f) known work in one field of endeavor prompting variations of it for use in either the same field or a different one based on design incentives or other market forces since the variations are predictable to one of ordinary skill in the art.

Additionally, a POSITA, at the time of the Claimed Priority Date, would have been motivated to combine the teachings of these references, e.g., as set forth in Exhibits B-0 to B-5. The ’545 patent states that the “present invention relates to a method and apparatus for establishing an uplink (UL) synchronization in a wireless communication system, and more particularly, to a method and apparatus for configuring a UL synchronization with respect to at least one Component Carrier.” E.g., ’545 patent, 1:23-27. Similar to the ’545 patent, each of the cited references relates, directly or indirectly, to uplink synchronization and/or configuring uplink transmissions in wireless communication systems. *See, e.g.*, **Dalsgaard** at 2:27-41 (“The eNB hosts the following functions: functions for RRM: RRC, Radio Admission Control,

Connection Mobility Control, Dynamic allocation of resources to UEs in both UL and DL (scheduling); IP header compression and encryption of the user data stream; selection of a MME at UE attachment; routing of User Plane data towards the EPC (MME/S-GW); scheduling and transmission of paging messages (originated from the MME); scheduling and transmission of broadcast information (originated from the MME or O&M); and

a measurement and measurement reporting configuration for mobility and scheduling.") **Fujitsu** at Abstract ("The radio base station transmits, to the mobile station, timing adjustment information prepared based on the result of reception of the random access signal and allocation information about an uplink radio resource allocated to the mobile station…if there is no control data to be transmitted, the mobile station transmits a synchronization completion report prepared in reply to the timing adjustment information."), ¶¶4, 105; **Huawei** at 3 ("When eNB needs to send DL data to UE in case of partial UL synchronization loss (i.e., part of the configured UL CCs lose synchronization), two ways can be used to request UE per-forming contention free RACH…"); **Marinier** at ¶5 ("Disclosed herein are ways for maintaining time alignment with multiple carriers. A group of uplink carriers (UL CC sets) that operate with a single Timing Advance (TA) are determined, and a TA value may be applied to a specific UL CC set."), ¶¶6, 7, 44, 75, 102; **Marinier Provisional** at ¶5, 6, 10**; McCoy** at 1:6-10 ("The present invention relates in general to a system and method for controlling the operation of a wireless device. In particular it relates to a system and method for dynamically changing the mode of a remote wireless device to account for changing device, network, or environmental parameters."), Abstract, 7:45-50; 7:56-60; 8:23-27; Fig. 4; **Nokia** at 1 (For initial access and RRC connection re-establishment, the UE can be expected to be working with a single DL and UL carrier pair and will use the RACH parameters defined by system information. UE behaviour could be expected to be the same as in Rel-8."), 3; **Qualcomm** at 1-2 ("Proposal 1: The UL component carriers configured for a UE should be

divided into timing groups, where the network controls the grouping of component carriers."), 2 ("The simplest solution is for the network to assign one UL CC per timing group where the UE sends RACH. The load can be balanced among UEs by the network making even assignments of UEs to different CCs in a timing group."); **Tenny** at ¶3 ("The following description relates generally to wireless communications, and more particularly to methods and apparatuses that facilitate maintaining timing synchronization for user equipment in a multicarrier Long Term Evolution-Advanced (LTE-A) system"), ¶¶9, 12, 34; **Tenny Provisional** at ¶38, AppxA (1:2-3, claim 6); **TR 36.912** (V9.1.0) at 8-9 ("A terminal may simultaneously receive or transmit one or multiple component carriers depending on its capabilities: []An LTE-Advanced terminal with reception and/or transmission capabilities for carrier aggregation can simultaneously receive and/or transmit on multiple component carriers"); **TS 36.300** (V8.1.1.0) at 46 ("UE performs synchronisation to target eNB and accesses the target cell via RACH, following a contention-free procedure if a dedicated RACH preamble was indicated in the mobilityControlInformation, or following a contention-based procedure if no dedicated preamble was indicated. UE derives target eNB specific keys and configures the selected security algorithms to be used in the target cell."); **TS 36.331** (V9.0.0) at 39-40 ("The purpose of this procedure is to modify an RRC connection, e.g. to establish/ modify/ release RBs, to perform handover, to setup/ modify/ release measurements. As part of the procedure, NAS dedicated information may be transferred from E-UTRAN to the UE."), 12, 40-41; **ZTE** at 6 ("In the random access procedure of the LTE-A system, firstly, the terminal uses the synchronization signal on the downlink component carrier to complete downlink synchronization."), 1, 8. Accordingly, each of these references relates to the same field of endeavor and/or addresses the same or a similar problem as the inventors of the '545 Patent, and a POSITA would have been motivated—and would have found it

straightforward and obvious—to combine their teachings, with a reasonable expectation of success, in a matter that meets each element of the Asserted Claims of the ’545 patent.

(a) Carrier Aggregation References

Each of the Carrier Aggregation References (*e.g.*, Tenny, Qualcomm, Marinier, Nokia, Huawei, and ZTE (Section II.C.2)) anticipates and/or renders obvious the Asserted Claims of the ’545 patent. *See* Exs. B-0 to B-5.

In addition, a POSITA would have been motivated—and would have found it straightforward and obvious—to combine the teachings of each of the Carrier Aggregation References with the teachings of each of the other Carrier Aggregation References. Each of these references discloses interrelated teachings of grouping multiple Component Carriers (CCs) into timing groups with similar timing characteristics to perform uplink synchronization in a wireless network, such as an LTE system. It was well understood that such multicarrier systems increased throughput in wireless networks by allowing mobile terminals to communicate over multiple carriers at a time, but that such multicarrier systems needed additional uplink synchronization features to be implemented to reliably allow such increased throughput. *See, e.g.*, Tenny Provisional, ¶¶5, 9. Therefore, a POSITA would have been motivated to look to other Carrier Aggregation References to identify additional techniques to advantageously improve the effectiveness of uplink synchronization for multiple carriers in order to increase the overall throughput for mobile communications in a network. A POSITA would have understood that applying the teachings of the Carrier Aggregation References would have advantageously increased bandwidth for users of cellular networks by providing better synchronization for multicarrier systems. A POSITA would also have looked to the Carrier Aggregation References because they provide additional detailed teachings about how to group together multiple CCs for a given UE, send that grouping to the UE, configure that grouping by selecting a delegate CC to

receiving timing information for the entire timing group, and apply that timing information to the CCs in the timing group to achieve synchronization of multiple CCs in order to achieve the objectives of the references in Exhibits B-0 to B-5. A POSITA would have recognized the benefits of combining these references with one another.

A POSITA would have expected success in combining the teachings of the Carrier Aggregation References with other Carrier Aggregation References as described above. These combinations of prior art references would have involved no more than the predictable use of prior art elements according to their established functions in a known manner, as reflected by, e.g., the teachings cited in Exhibits B0 to B5. A POSITA would thus have had a reasonable expectation in success in combining the teachings of these references, yielding the Asserted Claims of the ’545 Patent.

(b) LTE Protocol References

Each of the LTE Protocol References (*e.g.*, TS36.300, TS36.331, TR 36.912, Fujitsu, ZTE, LTE System Art (Section II.C.2)) renders obvious the Asserted Claims of the ’545 patent. *See* Exs. B-0.

A POSITA would have been further motivated to apply teachings of each of the LTE Protocol References to one another and/or to the teachings of any of the Carrier Aggregation References. Each of the LTE Protocol References discloses interrelated teachings about the specific LTE protocols that are used in a random access procedure to communicate timing information for establishing uplink synchronization in an LTE system. As reflected in the LTE Protocol References, there are several known techniques for communicating timing information to perform uplink synchronization using a random access procedure in an LTE system. For example, these LTE Protocol References provide teaching of having a base station or evolved Node B (eNB) to initiate a Radio Resource Control (RRC) connection with the UE, including an

RRC signal about what resources a UE has been assignment, as well as having the user equipment (UE) transmit a "Random Access Preamble" to an evolved Node B (eNB) over a random access channel (RACH) to perform uplink synchronization for that UE. As another example, as reflected in these LTE Protocol References, it was further known to, for example, have the eNB transmit in response a "Random Access Response" (RAR) back to the UE including timing alignment information, and for the UE to use that timing information to synchronize its subsequent transmissions with the eNB.

The Carrier Aggregation References disclose that a random access procedure is used to group together multiple CCs for purposes of establishing uplink synchronization in a wireless network, and teach using such features within networks including an LTE system. A POSITA therefore would have understood and found it obvious to combine these LTE protocol teachings from the LTE Protocol References with the Carrier Aggregation References for uplink synchronization for multiple carriers in an LTE system to advantageously improve interoperability of user devices in an LTE network. Additionally, a POSITA would have been motivated to look to other LTE Protocol References because they merely provide additional known, detailed teachings about how to implement the specific protocols that are used for their intended function to enable interoperability and more seamless integration of devices in an LTE system. A POSITA would have easily recognized the benefits of combining these references with one another.

A POSITA would have expected success in combining the teachings of the LTE Protocol References with the teachings of the Carrier Aggregation References and/or other LTE Protocol References as described above. These combinations of prior art references would have involved no more than the predictable use of prior art elements according to their established functions in

a known manner, as reflected by, e.g., the teachings cited in Exhibits B-0 to B-5. A POSITA would thus have had a reasonable expectation in success in combining the teachings of these references, yielding the Asserted Claims of the ’545 Patent.

(c) Hardware References

Each of the Hardware References (e.g., Marinier, Tenny, Fujitsu, McCoy, Dalsgaard, LTE System Art (Section II.C.2) anticipates and/or renders obvious the Asserted Claims of the ’545 patent. *See* Exs. B-0 to B-5.

A POSITA would have been further motivated to combine teachings from the Hardware References to one another and/or to the teachings of any of the Carrier Aggregation References and/or the LTE Protocol References to provide additional detail about how to implement the hardware required for a communication apparatus, such as a user equipment, in a wireless communication system. Each of the Hardware References discloses interrelated teachings about the hardware components, such as a transceiver and/or controller, that are used to implement a user equipment device that is capable of communicating with other network devices and processing communications in an LTE network. As reflected in the Hardware References, hardware design choices were well known for how to implement communication apparatuses used for wireless communications. Based on their similar, interrelated teachings, a POSITA would have been motivated to combine these teachings in order to improve the hardware design and performance of the communication apparatus. A POSITA also would have been motivated to combine these teachings for their additional detail on how to implement the hardware of the device to advantageously implement a device capable of effectively communicating according to its intended purpose. A POSITA would have recognized the benefits of combining the teachings of the Hardware References with one another.

A POSITA would have expected success in combining the teachings of the Hardware References with the teachings of the Carrier Aggregation References, LTE Protocol References, and/or other Hardware References as described above. These combinations of prior art references would have involved no more than the predictable use of prior art elements according to their established functions in a known manner, as reflected by, e.g., the teachings cited in Exhibits B-1 to B-5. A POSITA would thus have had a reasonable expectation in success in combining the teachings of these references, yielding the Asserted Claims of the ’545 Patent.

3. Identification of Each Item of Prior Art that Anticipates Each Asserted Claim of the ’247 Patent and Each Reference and Combination of References that Renders Obvious the Asserted Claims of the ’247 Patent

The following is an identification of prior art references that, either alone, or in combination with the teachings or knowledge of a person of ordinary skill in the art, the Admitted Prior Art, and/or the additional prior art references discussed below or in Exhibits C0-C8, anticipate and/or render obvious claims 1, 2, 8, 11, 12 and 18 of the ’247 Patent, including as indicated in the associated claim charts.

Prior Art Patents		
Issued Patent/Patent Publication Number	**Country of Origin**	**Date of Issue/Publication**
CN1523796A (“Du-796”)	CN	08.25.2004
EP1389847A1 (“Petrovic-847”)	EP	02.18.2004
EP1507352A1 (“Seidel-352”)	EP	02.16.2005
EP1507421A1 (“Loehr-421”)	EP	02.16.2005
EP1511245A2 (“Heo-245”)	EP	03.2.2005

Prior Art Patents		
Issued Patent/Patent Publication Number	**Country of Origin**	**Date of Issue/Publication**
EP1646170A1 (“Nishio-170”)	EP	04.12.2006
US20020009999A1 (“Lee-999”)	US	01.24.2002
US20020019965A1 (“Bims-965”)	US	02.14.2002
US6359877B1 (“Rathonyi-877”)	US	03.19.2002
US20030021240A1 (“Moon-240”)	US	01.30.2003
US6519469 (“Rydnell-469”)	US	02.11.2003
US20030123470A1 (“Kim-470”)	US	07.03.2003
US20030153276A1 (“Terry-276”)	US	08.14.2003
US20030152031A1 (“Toskala-031”)	US	08.14.2003
US20030210669A1 (“Vayanos-669”)	US	11.13.2003
US20030220119A1 (“Terry-119”)	US	11.27.2003
US20030235162A1 (“Chao-162”)	US	12.25.2003
US20040062269A1 (“Western-269”)	US	04.01.2004
US20040109433A1 (“Khan-433”)	US	06.10.2004
US20040123210A1 (“Baudry-210”)	US	06.24.2004
US20040120280A1 (“Western-280”)	US	06.24.2004
US20040160925A1 (“Heo-925”)	US	08.19.2004
US20040192208A1 (“Kong-208”)	US	09.30.2004

Prior Art Patents		
Issued Patent/Patent Publication Number	**Country of Origin**	**Date of Issue/Publication**
US20040219919A1 ("Whinnett-919")	US	11.04.2004
US20040223507A1 ("Kuchibhotla-507")	US	11.11.2004
US20050002363A1 ("Cheng-363")	US	01.06.2005
US20050009551A1 ("Tsai-551")	US	01.13.2005
US20050030911A1 ("Tiedemann-911")	US	02.10.2005
US20050048920A1 ("Liu-920")	US	03.03.2005
US20050053035A1 ("Kwak-035")	US	03.10.2005
US20020080719A1 ("Parkvall-719")	US	06.27.2002
US6907005B1 ("Dahlman-005")	US	06.14.2005
US7106690 ("Song-690")	US	09.12.2006
US7746953 ("Khan-953")	US	06.29.2010
US8498308 ("Esteves-308")	US	07.30.2013
US9622257 ("Terry-257")	US	04.11.2017
US9661593 ("Dick-593")	US	05.23.2017
US20210068023A1 ("Dick-023")	US	03.04.2021
WO2003036844A2 ("Terry-844")	WO	05.01.2003

Prior Art Publications			
Author	**Title**	**Date of Publication**	**Publisher**
3GPP	3GPP TR 25.896 v1.0.2, 3rd Generation Partnership Project; Technical Specification Group Radio Access Network; Feasibility Study for Enhanced Uplink for UTRA FDD; (Release 6)	2003	3GPP Organizational Partners (ARIB, CWTS, ETSI, T1, TTA, TTC)
3GPP	3GPP TS 25.321 V5.6.0, 3rd Generation Partnership Project; Technical Specification Group Radio Access Network; Medium Access Control (MAC) protocol specification (Release 5)	2003	3GPP Organizational Partners (ARIB, CCSA, ETSI, T1, TTA, TTC)
3GPP	3GPP TR 25.896 (V1.0.0) (2003-09)	2003	3GPP Organizational Partners (ARIB, CCSA, ETSI, T1, TTA, TTC)
3GPP	3GPP TR 25.896 (V6.0.0) (2004-03)	2004	3GPP Organizational Partners (ARIB, CCSA, ETSI, T1, TTA, TTC)
Lucent Technologies	R1-03-0285 Signalling for H-ARQ Operation (Lucent)	2003	3GPP Organizational Partners (ARIB, CCSA, ETSI, T1, TTA, TTC)

LG contends that, as set forth below, these references disclose and at least render obvious the Asserted Claims of the ’247 Patent. LG further contends that claims that are anticipated by a particular reference are also rendered obvious by that same reference alone, or in combination with the teachings of other references.

Prior Art Anticipating, and/or Rendering Obvious Asserted Claims of the ’247 Patent	
Primary Reference (Anticipation and Obviousness)	**Alternatively, Obviousness in View of, E.g.:**
Bims	Wireless Network APA, 3GPP APA, Cheng, Khan ’433, Khan ’953, Kuchibhotla, Liu, Lucent, TR25.896, Rathonyi, Chao, Vayanos, Kong, Tsai, Parkvall, Tiedemann, Toksala, Dahlman, Daalsgard, McCoy, Western-280, Western-269
Cheng	Wireless Network APA, 3GPP APA, Bims, Khan ’433,Khan ’953,Kuchibhotla, Liu, Lucent, TR25.896, Rathonyi, Chao, Vayanos, Kong, Tsai, Parkvall, Tiedemann, Toksala, Dahlman, Daalsgard, McCoy, Western-280, Western-269
Khan ’433	Wireless Network APA, 3GPP APA, Bims, Cheng, Khan ’953,Kuchibhotla, Liu, Lucent, TR25.896, Rathonyi, Chao, Vayanos, Kong, Tsai, Parkvall, Tiedemann, Toksala, Dahlman, Daalsgard, McCoy, Western-280, Western-269
Khan ’953	Wireless Network APA, 3GPP APA, Bims, Cheng, Khan ’433, Kuchibhotla, Liu, Lucent, TR25.896, Rathonyi, Chao, Vayanos, Kong, Tsai, Parkvall, Tiedemann, Toksala, Dahlman, Daalsgard, McCoy, Western-280, Western-269
Kuchibhotla	Wireless Network APA, 3GPP APA, Bims, Cheng, Khan ’433, Khan ’953, Liu, Lucent, TR25.896, Rathonyi, Chao, Vayanos, Kong, Tsai, Parkvall, Tiedemann, Toksala, Dahlman, Daalsgard, McCoy, Western-280, Western-269
Liu	Wireless Network APA, 3GPP APA, Bims, Cheng, Khan ’433, Khan ’953, Kuchibhotla, Lucent, TR25.896, Rathonyi, Chao, Vayanos, Kong, Tsai, Parkvall, Tiedemann, Toksala, Dahlman, Daalsgard, McCoy, Western-280, Western-269
Lucent	Wireless Network APA, 3GPP APA, Bims, Cheng, Khan ’433,Khan ’953, Kuchibhotla, Liu, TR25.896, Rathonyi, Chao, Vayanos, Kong, Tsai, Parkvall, Tiedemann, Toksala, Dahlman, Daalsgard, McCoy, Western-280, Western-269
TR25.896	Wireless Network APA, 3GPP APA, Bims, Cheng, Khan ’433, Khan ’953, Kuchibhotla, Liu, Lucent, Rathonyi, Chao, Vayanos, Kong, Tsai, Parkvall, Tiedemann, Toksala, Dahlman, Daalsgard, McCoy, Western-280, Western-269

A person of ordinary skill in the art would have been motivated and had a reasonable expectation of success to make these combinations because, for example, each would have been merely: (a) a combination of prior art elements according to known methods to yield predictable results; (b) a simple substitution of one known element for another to obtain predictable results; (c) a use of a known technique to improve similar devices in the same way; (d) application of a known technique to a known device ready for improvement to yield predictable results; (e) obvious to try; and/or (f) known work in one field of endeavor prompting variations of it for use in either the same field or a different one based on design incentives or other market forces since the variations are predictable to one of ordinary skill in the art.

Additionally, a POSITA, at the time of the Claimed Priority Date, would have been motivated to combine the teachings of these references, *e.g.*, as set forth in Exhibits C0-C8. The '247 patent states that the "present invention is related to a method and apparatus for coordinating Node-Bs and supporting enhanced uplink (EU) transmissions during handover," and more particularly, in a way that addresses problems arise for "scheduling" and Hybrid automatic repeat request (H-ARQ). *E.g.*, '247 patent, 1:37-41, 1: 58-61, 2:12-21. Similar to the '247 patent, each of the cited references relates, directly or indirectly, to reducing errors in wireless data transmissions or achieving reliable data transmissions between a downlink entity and an uplink entity. *See* Exhibits C0-C8. *See, e.g.*, Exs. C0-C8; **Bims** at ¶¶4, 7 ("When an ARQ session is started, [t]he receiving unit may end up with a message with errors.… It would be desirable to ensure that messages, once started, are received without errors"), 73 ("By using the present invention, the entire ARQ message may be received by the receiver with no errors in the message while using a reduced number of extraneous transmissions, thereby saving power consumption by the pager and prolonging battery life."); **Chao** at Abstract, ¶¶2, 24 ("In one

preferred embodiment, transmission errors that occur in a wireless communication system are detected and corrected."), 34 ("FIG. 4 is a flow diagram showing the steps of a method 400 for detecting errors and correcting transmission errors in accordance with a preferred embodiment of the present invention."), 35 ("This error message may take any form. In the context of the H-ARQ process, when the WTRU signals the Revert Message to the Node B, the Node B would then retransmit a PDU in response to the error signal."), 36 -38, Claims 1, 4, 7, 10, 13, 15, 17, 19, 21; **Cheng** at ¶¶1, 2 ("When an indication of failure of delivery of a data frame is detected at a lower-logical layer, an indication of the failed delivery is provided to a high-logical level and the data retransmission commences. Multiple-layer feedback acknowledgments are obviated. And, when retransmission of the data frame occurs at a reduced data rate, a failed delivery indication is less likely to be generated merely due to the reduced rate of retransmission of the data frame."), 13 ("to improve the delay performance of communications, hybrid ARQ (H-ARQ) feedback is also utilized for the reverse link to reduce the frame error rate due to power control inaccuracies"), 19, 52, 57, 69, 70; **Dahlman** at 1:12-2:9, 6:1-14, 6:31-42 ("The transmitted packets are also stored in the retransmission buffer 4 in the sender 1 until acknowledged. In the third step, the error detection block 9 indicates erroneously received or missing packets to the controller 10 which then sends an acknowledgement signal to the sender for properly received packets taking into account impact of the value of ARQ parameters 1 and/or 2 (if any)"), 8:9-25; **Khan '433** at ¶¶1, 13 ("A large number of error cases (e.g., "[A] NACK sent by the base station being interpreted as an ACK) lead to degraded throughput either due to Hybrid ARQ buffer corruption or unnecessary retransmissions. Unreliable ACK/NACK transmissions can occur because a single-bit ACK/NACK feedback message cannot use any type of channel coding.") 14-19, 27-28, 29 ("[B]ecause the acknowledgement information is provided together with other

information such as the scheduling information, error correction coding can be performed on this combined information."), 32-33, 35; **Khan '953** at 1:45-2:25 ("ARQ is typically used in concert with channel coding. Channel coding is the creation of redundancy in the transmitted information to allow receiving equipment to check as well as correct for errors."), 2:57-3:17, 4:49-5:2, 5:48-6:3; **Kuchibhotla** at ¶¶18-19, 22-24, 60, 69 ("FIGS. 6-13 are charts demonstrating the operation of the present invention as compared to the prior art. In each case, distributed scheduling of users on data channels requires reliable ACK/NACK determination to ensure maximum throughput. Reading errors, such as reading an ACK as a NACK, and reading NACK as an ACK cause substantial negative impacts. The impact for reading NACK as an ACK is significant since it can result in either data being permanently lost or incurring transport delay due to upper layer transport protocol retransmissions. Also wasted transmissions occur when an ACK is read as NACK, which reduces throughput."), 70-74; **Liu** at ¶¶9 ("Because the distance between a remote terminal and the base station varies with each user, signals from different remote terminals in communication with the same base station would arrive at the base station randomly if they were not coordinated by the base station. Since signal throughput can be enhanced by coordination of the arrival time of signals from the remote terminals, the base station in a UMTS network uses control channels in both the uplink and downlink directions to control when individual remote terminals transmit and for how long. To conserve bandwidth, the control channels are shared by several users at any time. To distinguish among messages destined for different users, each message is uniquely identified by a user ID."), 11-12, 33 ("Together, the HARQ ID and redundancy version may allow the base station to specify to the remote terminal the specific HARQ process and the specific retransmission that the base station wants the remote terminal to send. The transport format specifies the correct channelization code to be used by the remote

terminal in its transmission. The transport block size specifies the size of the packet to be sent by the remote terminal. The new/continue data indication if set to new indicates that a new packet is to be sent. If set to continue it indicates that a previously transmitted packet is to be sent."); **Lucent** at 1 ("In this contribution, we discuss the signalling that is required for efficient H-ARQ operation."), 2 ("Node-B controlled scheduling may be better suited for high data rate transmissions. However, Node-B controlled scheduling does pose some challenges in soft handoff (SHO), where the UE can get multiple conflicting schedule grant messages from multiple Node-Bs. Furthermore, since the Node-Bs are, in general, uncoordinated, the parameters for data transmission commanded by one of the Node-Bs in the active set of the UE may cause undesirably high interference to the others"), 4-5 ("The schedule grant message transmitted by the Node-B to the UE at time t_4 uses the same values for NDI and H-ARQ channel as at time t_2, which implicitly indicates to the UE that the second packet was received in error."); **TR25.896** at 19 ("Node B controlled hybrid ARQ allows for rapid retransmissions of erroneously received data units, thus reducing the number of RLC retransmissions and the associated delays. This can improve the quality of service experienced by the end user. As a Node B controlled retransmission is less costly from a delay perspective, the physical channel can be operated with somewhat higher error probability than in Rel 5, which may result in improved system capacity."), 21 ("Protocol robustness in presence of signaling errors needs to be considered and additional protection of the control signaling may be required."), 43-44; **Rathonyi** at 4:25-5:25 ("Hybrid ARQ schemes provide low bit error rates using redundancy."), 7:45-64, 8:58-10:30, 11:63-12:11 ("For error detection, a CRC is appended to the packets."), Claims 5, 6, 13; **Vayanos** at ¶¶9-14, 15 ("A set of candidate HARQ channels may be formed for each missing packet. The candidate set may include, for example, all HARQ channels that are active at (or a

short time after) the time the packet is detected to be missing."), 79, 80 ("A NAK to ACK error for a given packet results in the transmitter assuming that the packet has been correctly recovered by the receiver. The transmitter can then discard this packet and initiate the transmission of another packet on the same HARQ channel. Therefore, the NAK to ACK error results in a lost packet at the MAC layer."), 81-86, 113-115, 120-122, Claims 1 (In a CDMA communication system, a method for delivering data recovered by a hybrid automatic retransmission (HARQ) entity in proper order to higher layers, comprising: receiving packets from the HARQ entity; detecting for missing packets among the received packets; stalling delivery of received packets later than the detected missing packets; determining whether each missing packet is either subsequently received from the HARQ entity or lost by successively eliminating HARQ channels that may be used to send the missing packet; and delivering received packets stalled by each missing packet after the missing packet is determined to be lost or received from the HARQ entity.), 8-17, 28, 38-39, 44-45, 50; **Kong** at ¶20 ("HARQ allows combining of the original transmission with the new transmission, rather than to discard the original transmission. This greatly improves the probability of correct decoding of the packet. The word "hybrid" in HARQ indicates that Forward Error Correction (FEC) techniques have been used in addition to ARQ techniques. HARQ combining schemes imply that retransmissions are combined with the original unsuccessful transmissions. Accordingly, HARQ helps to ensure that transmissions resulting in unsuccessful decoding, by themselves, are not wasted."), 53 ("In general, the HARQ selective retransmission protocol allows for individual encoder blocks that have errors to be re-transmitted with a next 5 ms R-SCH frame"), 56 ("In FIG. 5A, encoder block 512 a (EB4) of R-SCH frame 510 has errors, i.e., the CRC check fails and this encoder block cannot be decoded by the base station 115. Accordingly, base station 115 sends a scheduling grant message on F-

USCH 520 for ACID 1 (which is the only ARQ channel being used) that includes a retransmission flag 524. This tells the mobile station 105 that EB4 in the previously received 5 ms R-SCH frame 510 had errors, and requests that the mobile station re-send EB4 in the next 5 ms R-SCH Frame 511."), Claim 28; **Tsai** at ¶¶6-7,13 ("[T]he present invention is embodied in a mobile station configured for use in a wireless communication network that provides Automatic Repeat Requests (ARQ), e.g., Hybrid ARQ, for data frames transmitted by the mobile station, such that the mobile station receives direct or indirect ACK/NAK feedback for each data frame that it transmits"), 25, 26 ("After or simultaneous with such processing, transceiver 12 evaluates reception errors for the second signal as received at transceiver 12 (Step 114), and transmits corresponding reception quality feedback to transceiver 10 for the second signal (Step 116). For example, the second signal may comprise a data signal having a succession of data frames and transceiver 12 may be configured to send ACK or NAK indicators on a per frame basis depending on whether given frames are or are not successfully decoded at transceiver 12."), 27-29, 36; **Parkvall** at ¶¶2-10, 9 ("A special kind of ARQ schemes are so-called Hybrid ARQ schemes, HARQ. In hybrid ARQ (HARC), features of a pure FEC scheme and a pure ARQ scheme are combined. Error correction and error detection functions are performed along with ARQ feedback signaling which typically includes acknowledgment and negative acknowledgment signals, and may also include packet "lost" signals. The channel code or codes in a hybrid ARQ scheme may be used for both error correction and error detection. A negative acknowledgment signal is sent back to the transmitter if an error is detected after error correction."), 11, 26, 41-42, 47; **Tiedemann** at ¶¶75 ("Retransmission techniques may be deployed to ensure reliable transmission, for example Automatic Repeat reQuest (ARQ). Thus, if the first subpacket is received without error (using a CRC, for example), a positive

Acknowledgement (ACK) is sent to the mobile station and no additional subpackets will be sent (recall that each subpacket comprises the entire packet information, in one form or another). If the first subpacket is not received correctly, then a Negative Acknowledgement signal (NAK) is sent to the mobile station, and the second subpacket will be transmitted."), 121, 131-133, 152, 160, 199-201; **Toskala** at ¶¶5 ("The above-described automatic repeat request (ARQ) idea is combined with forward error correction to arrive at hybrid ARQ (HARQ). Forward error correction (FEC) is a technique used by a receiver for correcting errors incurred in transmission without requiring retransmission. It typically involves a transmitter using a convolution algorithm to embed sufficient redundancy in the data block to allow the receiver to correct transmission errors."), 6, 9, 15, 22, 32, Claims 5-6, 9; **Western '280** at ¶¶50 ("When the MS 270 transmits a data burst to the BTS 260 in an uplink data message using one of the coding schemes CS-1, CS-2, CS-3, or CS-4, the data message bits and error control bits are arranged similarly to those in downlink data message bursts"), 55 ("This coding scheme is selected in this example as the one for initial use because it provides reasonably good throughput but also provides a good probability of data blocks being received adequately error free on the first try."); **Western '269** at ¶¶40 ("The modulation schemes and encoding schemes may be adaptively chosen based on factors such as requisite bit error rates (BER) or channel quality attributes."), 52 ("When it is time to send a packet uplink acknowledgement, the network determines a coding scheme that the mobile station should use for future data transfers, as seen at block 320. The determination may be made based on the present radio situation such as bit error rates, block error statistics, and other measures of transfer performance."). Accordingly, each of these references relate to the same field of endeavor and/or address the same or similar problem as the inventors of the '247 Patent, and a POSITA would have been motivated—and would have found

it straightforward and obvious—to combine their teachings, with a reasonable expectation of success, in a matter that meets each element of the Asserted Claims of the ’247 patent.

(a) Uplink Scheduling References

Each of the Uplink Scheduling References (*e.g.*, Bims, Cheng, Khan ’433, Khan ’953, Kuchibhotla, Liu, Lucent, and TR25.896 (Section II.C.3)) anticipates and alternatively, renders obvious the Asserted Claims of the ’247 patent. *See* Exs. C0–C8.

Alternatively, a POSITA would have been motivated—and would have found it straightforward and obvious—to combine the teachings of each of the Uplink Scheduling References with the teachings of any of the other Uplink Scheduling References. Each of these references discloses interrelated teachings of scheduling uplink transmissions for a user device by using a H-ARQ or ARQ process to request retransmissions that were unsuccessfully received. It was well understood that uplink scheduling grants were susceptible to getting lost or corrupted during transmission in a wireless environment. It was also well understood that implementing H-ARQ or ARQ schemes improved error control and reliability of transmissions in wireless communication systems by, for example, transmitting acknowledgment messages (ACKs) when a transmission was successfully received and negative acknowledgment messages (NACKs) when the transmission was unsuccessfully received. *See, e.g.*, Bims ¶4; Section II.B.1. A POSITA would have been motivated to look to other Uplink Scheduling References to identify additional H-ARQ/ARQ techniques to advantageously improve the error control and reliability of uplink scheduling transmissions. A POSITA would have understood that applying the teachings of the Uplink Scheduling References would have advantageously improved the accuracy and efficiency of uplink scheduling grants by reducing the number of corrupted and missed scheduling grant messages. A POSITA would also have looked to the other Uplink Scheduling References because they provide additional detailed teachings about how to provide

efficient and accurate signaling to schedule uplink transmissions using a H-ARQ/ARQ system. A POSITA would have recognized the benefits of combining these references with one another.

A POSITA would have expected success in combining the teachings of the Uplink Scheduling References with other Uplink Scheduling References as described above. These combinations of prior art references would have involved no more than the predictable use of prior art elements according to their established functions in a known manner, as reflected by, e.g., the teachings cited in Exhibits C0-C8. A POSITA would thus have had a reasonable expectation in success in combining the teachings of these references, yielding the Asserted Claims of the '247 Patent.

(b) H-ARQ Identification References

Each of the H-ARQ Identification References (*e.g.*, Liu, Lucent, Chao, Cheng, TR 25.896, Khan '433, and Bims (Section II.C.3)) anticipates and/or renders obvious the Asserted Claims of the '247 patent. *See* Exs. C0–C8.

A POSITA would have been further motivated to apply the teachings of each of the H-ARQ Identification References to one another and/or to the teachings of any of the Uplink Scheduling References. *See* Exs. C0–C8. Each of the H-ARQ Identification References discloses interrelated teachings that use a H-ARQ identification field to identify which prior transmission was unsuccessfully received and needs to be retransmitted. A POSITA would have understood and found it obvious to apply the teachings of the H-ARQ Identification References to the teachings of the Uplink Scheduling references to include a H-ARQ identification field in an uplink scheduling message to more accurately and reliably identify which transmissions need to be retransmitted in a H-ARQ system, thereby advantageously improving error control, reliability, and resource efficiency by reducing the number of erroneous retransmissions. Additionally, a POSITA would have been motivated to look to other H-ARQ Identification

References because they provide additional detailed teachings about how to efficiently implement H-ARQ fields in uplink scheduling information in a resource-efficient way. A POSITA would have easily recognized the benefits of combining the teachings of these references with one another.

A POSITA would have expected success in combining the teachings of the H-ARQ Identification References with the teachings of the Uplink Scheduling References and/or other H-ARQ Identification References described above. These combinations of prior art references would have involved no more than the predictable use of prior art elements according to their established functions in a known manner, as reflected by, e.g., the teachings cited in Exhibits C0–C8. A POSITA would thus have had a reasonable expectation in success in combining the teachings of these references, yielding the Asserted Claims of the ’247 Patent.

(c) Modulation and Coding Scheme (MCS) References

Each of the MCS References (e.g., Lucent, Western ’269, Western ’280 (Section II.C.3)) renders obvious the Asserted Claims of the ’247 patent. *See* Exs. C0.

A POSITA would have been further motivated to combine the teachings of each the MCS References with one another and/or with the teachings of any of the Uplink Scheduling References and/or H-ARQ Identification References. *See* Ex. C0–C8. Each of the MCS References discloses interrelated teachings that includes a MCS in an uplink scheduling grant from a network element to a user device. The use of a MCS was a well known solution to a known problem, and merely applied this known technical solution for its intended purpose. Additionally, a POSITA would have understood and found it obvious to apply the teachings of the MCS References to the teachings of the Uplink Scheduling References and/or H-ARQ Identification References, yielding a system that, e.g., includes MCS in the uplink scheduling grant message to the UE to advantageously reduce the load on the base station by allowing it to

dictate the modulation and coding scheme format for all UEs rather than handling different MCS formats dictated by different UEs, simplifying and improving the reliability and intercompatibility of the system. Additionally, a POSITA would have been motivated to look to other MCS References because they provide additional detailed teachings about how to communicating modulating and coding information in a resource-efficient way to a UE. A POSITA would have easily recognized the benefits of combining the teachings of these references with one another.

A POSITA would have expected success in combining the teachings of the MCS References with the teachings of other MCS References, Uplink Scheduling References, and/or H-ARQ Identification References as described above. These combinations of prior art references would have involved no more than the predictable use of prior art elements according to their established functions in a known manner, as reflected by, e.g., the teachings cited in Exhibits C0–C8. A POSITA would thus have had a reasonable expectation of success in combining the teachings of these references, yielding the Asserted Claims of the ’247 Patent.

(d) Hardware References

Each of the Hardware References (*e.g.*, Bims, Chao, Cheng, Khan ’953, Parkvall, Rathonyi, Tsai, Vayanos, 3G System Art) (Section II.C.3)) anticipates and/or renders obvious the Asserted Claims of the ’247 patent. *See* Exs. C0–C8.

A POSITA would have been further motivated to apply the teachings of the Hardware References to one another and/or to the teachings of any of the Uplink Scheduling References, H-ARQ Identification References, and/or MCS References for similar reasons to those discussed above in Section II.C.2(c). For example, each of the Hardware References discloses interrelated teachings about the hardware components, such as a transceiver and/or controller, that are used to implement a user equipment device that is capable of communicating with other network

devices and processing communications in a 3G network. As reflected in the Hardware References, hardware design choices were well known for how to implement communication apparatuses used for wireless communications. Based on their similar, interrelated teachings, a POSITA would have been motivated to combine these teachings in order to improve the hardware design and performance of the communication apparatus. A POSITA also would have been motivated to combine these teachings for their additional detail on how to implement the hardware of the device to advantageously implement a device capable of effectively communicating according to its intended purpose. A POSITA would have recognized the benefits of combining the teachings of the Hardware References with one another.

A POSITA would have expected success in combining the teachings of the Hardware References with the teachings of the Uplink Scheduling, H-ARQ Identification, and/or MCS References as described above. These combinations of prior art references would have involved no more than the predictable use of prior art elements according to their established functions in a known manner, as reflected by, e.g., the teachings cited in Exhibits C0–C8. A POSITA would thus have had a reasonable expectation in success in combining the teachings of these references, yielding the Asserted Claims of the ’247 Patent.

4. Identification of Each Item of Prior Art that Anticipates Each Asserted Claim of the ’809 Patent and Each Reference and Combination of References that Renders Obvious the Asserted Claims of the ’809 Patent

The following is a list of prior art references that, either alone, or in combination with the teachings or knowledge of a person of ordinary skill in the art, the Admitted Prior Art, and/or the additional prior art references discussed below or in Exhibits D0-D4, would have rendered obvious claims 1-10 of the ’809 Patent, including as indicated in the associated claim charts.

Prior Art Patents – ’809

Issued Patent/Patent Publication Number	Country of Origin	Date of Issue/Publication
WO2007078155 ("Lee ’155")	WO	07.12.2007
US20080049669 ("Lundby")	US	02.28.2008
US20090225709 ("Wager"); and U.S. Provisional Application No. 61/015,316 (the “Wager Provisional”)	US	09.10.2009
WO 2006134950 ("Tanno")	WO	12.21.2006
US20060251027 ("Chun")	US	11.09.2006
WO2007024099 ("Lee'099")	WO	03.01.2007
WO2009022855 ("Sung")	WO	02.19.2009
US20050276266 ("Terry ’266")	US	12.15.2005
US20050251722 ("Terry ’722")	US	11.10.2005
US20060176845 ("Sarkkinen")	US	08.10.2006
US8214711 ("Lindskog")	US	07.03.2012
US20090131052 ("Hakola"); and U.S. Provisional Application No. 60/985,537 (“Hakola Provisional”)	US	05.21.2009
US20060088058 ("Eckert")	US	04.27.2006

Prior Art Publications – ’809			
Author	**Title**	**Date of Publication**	**Publisher**
3GPP	3GPP TS 25.321 v7.5.0 (2007-06)	2007	3GPP Organizational Partners (ARIB, CWTS, ETSI, T1, TTA, TTC)
3GPP	3GPP TS 36.321 v1.0.0 (2007-09)	2007	3GPP Organizational Partners (ARIB, CWTS, ETSI, T1, TTA, TTC)
3GPP	ETSI TS 125.321 v7.6.0 (2007-10)	2007	3GPP Organizational Partners (ARIB, CCSA, ETSI, T1, TTA, TTC)

Prior Art Publications – ’809			
Author	**Title**	**Date of Publication**	**Publisher**
3GPP	R2-073473	2007	3GPP Organizational Partners (ARIB, CCSA, ETSI, T1, TTA, TTC)
Ericsson	R2-080044 (“R2-080044” or “Ericsson”)	2008	3GPP Organizational Partners (ARIB, CCSA, ETSI, T1, TTA, TTC)
Markus Wimmer	RP-080266	2008	3GPP Organizational Partners (ARIB, CCSA, ETSI, T1, TTA, TTC)
Nokia Corporation	R2-073254	2007	3GPP Organizational Partners (ARIB, CCSA, ETSI, T1, TTA, TTC)

LG contends that, as set forth below, these references disclose and at least render obvious the Asserted Claims of the ’809 patent. LG further contends that claims that are anticipated by a particular reference are also rendered obvious by that same reference alone, or in combination with the teachings of other references.

Prior Art Anticipating, and/or Rendering Obvious Asserted Claims of the ’809 Patent	
Primary Reference (Anticipation and Obviousness)	**Alternatively, Obviousness in View of, E.g.:**
Lee ’155	3GPP TS 25.321 V 7.5.0, 3GPP TS 36.321 V. 1.0.0, Chun, Eckert, ETSI TS 125.321 V. 7.6.0, Hakola, Hakola Prov, Lee ’099, Lindskog, Lundby, R2 080044, R2-073254, R2-080266, Sarkkinen, Sung, Tanno, Terry ’266, Terry ’722, Wager
Lundby	3GPP TS 25.321 V 7.5.0, 3GPP TS 36.321 V. 1.0.0, Chun, Eckert, ETSI TS 125.321 V. 7.6.0, Hakola, Hakola Prov, Lee ’155, Lee ’099, Lindskog, R2 080044, R2-073254, R2-080266, Sarkkinen, Sung, Tanno, Terry ’266, Terry ’722, Wager
R2-080044	3GPP TS 25.321 V 7.5.0, 3GPP TS 36.321 V. 1.0.0, Chun, Eckert, ETSI TS 125.321 V. 7.6.0, Hakola,

Prior Art Anticipating, and/or Rendering Obvious Asserted Claims of the ’809 Patent	
Primary Reference (Anticipation and Obviousness)	**Alternatively, Obviousness in View of, E.g.:**
	Hakola Prov, Lee ’155, Lee ’099, Lindskog, Lundby, R2-073254, R2-080266, Sarkkinen, Sung, Tanno, Terry ’266, Terry ’722, Wager
Wager	3GPP TS 25.321 V 7.5.0, 3GPP TS 36.321 V. 1.0.0, Chun, Eckert, ETSI TS 125.321 V. 7.6.0, Hakola, Hakola Prov, Lee ’155, Lee ’099, Lindskog, Lundby, R2-080044, R2-073254, R2-080266, Sarkkinen, Sung, Tanno, Terry ’266, Terry ’722

A person of ordinary skill in the art would have been motivated and had a reasonable expectation of success to make these combinations because, for example, each would have been merely: (a) a combination of prior art elements according to known methods to yield predictable results; (b) a simple substitution of one known element for another to obtain predictable results; (c) a use of a known technique to improve similar devices in the same way; (d) application of a known technique to a known device ready for improvement to yield predictable results; (e) obvious to try; and/or (f) known work in one field of endeavor prompting variations of it for use in either the same field or a different one based on design incentives or other market forces since the variations are predictable to one of ordinary skill in the art.

Additionally, a POSITA, at the time of the Claimed Priority Date, would have been motivated to combine the teachings of these references, *e.g.*, as set forth in Exhibits D0-D4. The ’809 patent states that that the “field of the invention” is “related to wireless communication,” and management of access to “radio resources.” *E.g.*, ’809 patent, 1:25-28, 1:32-41. Similar to the ’809 patent, all of the cited references relate, directly or indirectly, to both wireless communications and management of radio resources. *See, e.g.*, Exhibits D0-D4; Chun [0002] (“The present invention relates to communicating control information in a mobile communication system, wherein the control information of a mobile terminal for scheduling an

uplink channel may be notified to a network more quickly with less power."); Eckert [0002] ("The invention relates to a data link layer protocol unit, mobile radio devices, a mobile radio network control unit and also a method for reading data from a plurality of data link layer protocol buffer storages."); Hakola [0002] ("Radio communication systems, such as wireless data networks (e.g., Third Generation Partnership Project (3GPP) Long Term Evolution (LTE) systems, spread spectrum systems (such as Code Division Multiple Access (CDMA) networks), Time Division Multiple Access (TDMA) networks, WiMAX (Worldwide Interoperability for Microwave Access), etc.)"); Hakola Prov [0001] ("Various exemplary embodiments of the invention relate generally to transmission control in a communication system."); Lee 1:5-6 ("The present invention is directed to a mobile communication system, and, specifically, to a method for scheduling radio resources in a mobile communication system.); Lee '099 1:5-7 ("The present invention relates to in a radio communication system, more particularly to a method of transmitting control information for scheduling in a mobile communication system."); Lindskog US 8214711 1:5-11 ("The present invention relates to packet data traffic and signaling between a user entity (UE), a radio base station (Node-B) and a radio network controller (RNC). More particular the invention pertains to HSPDA (High Speed Packet Data Access) traffic making use of among others the MAC-hs (Medium Access Control High Speed) and RLC (Radio Link Control Layer) data transmission protocols."); Lundby [0003] ("The present disclosure relates generally to communication, and more specifically to techniques for channel monitoring in a wireless communication network."); Sarkkinen [0003] ("The present invention relates to managing network resources. More particularly, the present invention relates to managing network resources using user equipment to inform a network controller that resources are ready to be released."); Sung [1] ("The present invention relates to wireless communications, and more

particularly, to a method for transmitting a voice over Internet protocol (VoIP) packet for a VoIP service. Background Art"); Tanno, [0002] ("The present invention generally relates to a radio resource assignment method, and more particularly, relates to channel assignment in transmission of a control signal in an uplink and relates to channel configuration in a radio section."); Terry '266 [0002] ("The present invention is related to a wireless communication system including a wireless transmit/receive unit (WTRU) and a Node-B. More particularly, the present invention is related to a method and apparatus for dynamically adjusting data transmission parameters such as modulation and coding scheme (MCS) and transport block set (TBS) size, and assigning and releasing a hybrid-automatic repeat request (H-ARQ) process used to control the transfer of data between the WTRU and the Node-B."); Terry '722 [0002] ("The present invention is related to a wireless communication system including at least one wireless transmit/receive unit (WTRU), at least one Node-B and a radio network controller (RNC). More particularly, the present invention is related to a method and apparatus for assigning automatic repeat request (ARQ)/hybrid automatic repeat request (H-ARQ) processes in the WTRU for supporting enhanced uplink (EU) transmissions."); 3GPP TS 25.321 V 7.5.0 (network communication standard document relating to resource management), 3GPP TS 36.321 V. 1.0.0 (same); ETSI TS 125.321 V. 7.6.0 (same); R2-080044 (same); R2-073253 (same); R2-073254 (same); RP-080266 (same). Accordingly, each of the cited references relates to the same field of endeavor and/or address the same or a similar problem, and a POSITA would have been motivated—and would have found it straightforward and obvious—to combine their teachings, with a reasonable expectation of success, in a matter that meets each element of the Asserted Claims of the '809 Patent.

(a) Resource Releasing References

As set forth in Exhibits D0-D4; each of the Resource Releasing References (e.g., Hakola, Hakola Prov, Lee '155, Lundby, R2-080044, R2-080266, Sarkkinen, Sung, Tanno, and Wager) anticipates and alternatively renders obvious the Asserted Claims of the '809 Patent. Alternatively, a POSITA would have been motivated to modify each of the Resource Releasing References—e.g., teachings of a device releasing its resources when its communications buffers are empty or communications are complete, including with respect to any error checking and/or H-ARQ processes, with the teachings of any of the other Resource Releasing References. Each of the Resource Releasing References is directed to interrelated teachings of when and how to release shared resources allocated to devices within a wireless communication network, including the triggers used to determine that a resource should be released. Each of these references discloses known and compatible techniques for improving the operation of a system by "quickly and effectively" releasing common resources once they are no longer in use. *E.g.*, Wager [0007]. Moreover, each of the references teaches how to release and reallocate limited resources within a network to ensure that common resources are used efficiently across the network as a whole. *See, e.g.*, Wager [0007]; Tanno [0010] ("Therefore, an object of the present invention is to improve use efficiency of radio resources in the system as a whole[.]"). These interrelated teachings would have motivated a POSITA to look to each of the other Resource Releasing References, with related and complementary disclosures, for additional advantageous teachings to apply to the networks and resource allocation schemes disclosed by the other Resource Releasing References. Moreover, a POSITA would have been motivated—and would have found it straightforward and obvious—to apply the teachings of each of the Resource Releasing References to any of the other Resource Releasing References to advantageously improve the allocation and efficient releasing of resources based on the needs of a given

network, improving interoperability and ensuring a more efficient allocation of common network resources to various users.

A POSITA would have expected success in modifying the Resource Releasing References as described above. These combinations of prior art references would have involved no more than the predictable use of prior art elements according to their established functions in a known manner, as reflected by, *e.g.*, the teachings cited in Exhibits D0-D4. A POSITA would thus have had a reasonable expectation in success in combining the teachings of these references, yielding the Asserted Claims of the '809 Patent.

(b) Status Reporting References

As set forth in Exhibits D0-D4, each of the Status Reporting References (*e.g.*, Chun, Lee '155, Lee '099, Lundby, R2-080044, Sung, Wager) anticipates and, alternately, renders obvious the Asserted Claims of the '809 patent. Alternatively, a POSITA would have been motivated to modify each of the teachings of the Resource Releasing References with the teachings of the each of the Status Reporting References, or to modify the teachings of each of the Status Reporting References with the teachings of any of the other Status Reporting References. For example, each of the Status Reporting References provides advantageous teachings of communicating with the network information about the communications status and scheduling status of the device, including whether its current communications buffers are empty or not (e.g., by communicating that its buffer status is empty by indicating that TEBS=0). Moreover, a POSITA would have found it straightforward and obvious to apply the teachings of each of the Status Reporting References to the teachings of the other Status Reporting References to advantageously customize the status information transmitted between devices in the network to fit the needs of a given network. Additionally, each of the Status Reporting References' teachings are complementary and, together, further improve the efficient management of

resources. A POSITA would have recognized that the Status Reporting References' teachings of reporting status is a known solution to a known scheduling problem—namely, devices communicating their communications status advantageously provides the network with information to facilitate the reallocation of resources. Therefore, it would been a routine design choice for a POSITA to look to the Status Reporting References to improve upon the reliable and efficient allocation of resources in a network.

Additionally, a POSITA would have been further motivated to combine teachings from the Resource Releasing References with the teachings of any of the Status Reporting References. It was well understood that in wireless networking that there is a need for managing wireless resources. Applying the Status Reporting References teachings to the Resource Releasing References simply applies the references' teachings for their intended purpose within a wireless network in order to improve the efficient allocation of resources. The combination is therefore nothing more than applying the Status Reporting References' teachings according to known methods to yield predictable results. A POSITA would have looked to each of these references, including their related and complimentary disclosures, for additional advantageous teachings to apply to the resource allocation schemes disclosed in the Resource Releasing References. Additionally, the Status Reporting References' teachings are compatible with and readily applicable to the teachings of the Resource Releasing References; it would have been straightforward for a POSITA to substitute and/or apply these teachings to the Resource Releasing References to facilitate the teachings of efficiently releasing network resources based on information about the need for such resources in the network.

A POSITA would have expected success in modifying the Transmission Status Reporting References or applying the teachings of the Transmission Status Reporting References to modify

the other references as described above. These combinations of prior art references would have involved no more than the predictable use of prior art elements according to their established functions in a known manner, as reflected by, *e.g.*, the teachings cited in Exhibits D0-D4. A POSITA would thus have had a reasonable expectation in success in combining these references, yielding the Asserted Claims of the '809 Patent.

(c) Enhanced Dedicated Channel (E-DCH) References

As set forth in Exhibits D0-D4, each of the E-DCH References (e.g., Chun, Eckert, Hakola, Hakola Prov, Lee '099, Lundby, R2-080044, R2-073254, R2-080266, Sung, Terry '266, Terry '722, Wager) anticipates and alternatively renders obvious the Asserted Claims of the '809 Patent. For example, each of these references provides detailed teachings of communications protocols relating to the E-DCH, including acquiring an E-DCH resource by transmitting a preamble over an E-AICH acquisition channel, communicating with the node B about when a cell reelection process will take place on user equipment, or other general teachings about the use of E-DCH resources in a CELL_FACH state, when designing or adapting systems to use, release, and/or reallocate E-DCH resources. Alternatively, a POSITA would have been motivated to combine the teachings of the E-DCH Resources to one another and/or to each of the Status Reporting and Resource Releasing References.

Each of the E-DCH References discloses interrelated protocol teachings of how to incorporate and use enhanced dedicated channels (E-DCH) in wireless communications networks, to temporarily allocate shared system resource to certain devices in order to improve bandwidth. It was well-understood from wireless standards that permitting devices to access shared E-DCH resources in a cell forward access channel CELL_FACH increased the overall data rate of the shared channel. *See, e.g.*, Section II.B.1. Moreover, the basic principles of accessing and operating within an E-DCH network were well known, as demonstrated by

standards set forth for accessing and operating within an E-DCH network. *See e.g.*, R2-073254. Indeed, the E-DCH References each have known, overlapping, and complementary disclosures of such wireless communications features. A POSITA therefore would have been motivated to look to the E-DCH References for their known teachings, and would have found applying their teachings to be nothing more than the use of a known technique to improve a similar device in the same way by combining elements according to known methods. These interrelated teachings would have motivated a POSITA to look to each of these other references, with related and complementary disclosures, for additional advantageous teachings to apply to the resource allocation and network communication schemes disclosed by the other E-DCH References.

Additionally, a POSITA would have been motivated to apply the teachings of the E-DCH References to the teachings of the Resource Releasing References and Status Reporting References. The E-DCH References provide teachings about using enhanced dedicated channels (E-DCH) within wireless communications networks, which advantageously enables faster and more reliable data transmissions on a wireless network, while the Resource Releasing References and Status Reporting References provide known, standardized, and well-understood teachings of how to manage the use of E-DCH resources. A POSITA therefore would have been motivated to apply these well-understood and compatible teachings with one another in a known manner for their intended purposes to achieve predictable result of advantageously improving the efficient use of E-DCH resources.

A POSITA would have expected success in modifying the E-DCH References or applying the teachings of the E-DCH References to modify the other references as described above. These combinations of prior art references would have involved no more than the predictable use of prior art elements according to their established functions in a known manner,

as reflected by, *e.g.*, the teachings cited in Exhibits D0-D4. A POSITA would thus have had a reasonable expectation in success in combining the teachings of these references, yielding the Asserted Claims of the ’809 Patent.

(d) Hybrid Automatic Repeat Request (HARQ) Process References

As set forth in Exhibits D0-D4, each of the HARQ Process References (e.g., 3GPP TS 25.321 V 7.5.0, 3GPP TS 36.321 V. 1.0.0, Chun, Eckert, ETSI TS 125.321 V. 7.6.0, Lee ’099, Lindskog, Lundby, R2-080044, R2-073254, Tanno, Terry ’266, Terry ’722, Wager, 3GPP APA) anticipates and alternatively renders obvious the Asserted Claims of the ’809 Patent. Alternatively, a POSITA would have been motivated to modify of each of the teachings of the Resource Releasing References, Status Reporting References, and E-DCH References with the teachings of each of the HARQ Process References, or to modify the teachings of any of the HARQ Process References with the teachings of any of the other HARQ Process References.

Each of the HARQ Process References discloses interrelated teachings of using hybrid automatic repeat requests (HARQ or H-ARQ) for communications within a network in order to perform error correction in a predictive and efficient manner, advantageously improving the reliability of a network. Each of these references provide complementary and overlapping teachings of aspects of the HARQ process, including for example, teachings of how to manage and/or empty HARQ buffers, and indicate when a HARQ process is complete. A POSITA would have found it straightforward and obvious to combine the teachings of the HARQ Process References to advantageously implement HARQ processes to improve networks using this known and well-understood technique for its intended purpose of improving the reliability of a network.

Additionally, a POSITA would have been motivated to combine the teachings of the HARQ Process References with the teachings of the Resource Releasing References, Status Reporting References, and E-DCH References. Each of these references provide compatible and interrelated teachings of how to improve the operation of a wireless network. Indeed, several of the Resource Releasing References, Status Reporting References, and E-DCH References explicitly recognize that such references will advantageously benefit from the reliability gains from applying the teachings of the HARQ Process References. Applying the HARQ Process References to these other references therefore would have been nothing more than a combination of prior art elements according to known methods to yield predictable results.

A POSITA would have expected success in modifying the HARQ Process References or applying the teachings of the HARQ Process References to modify the other references as described above. These combinations of prior art references would have involved no more than the predictable use of prior art elements according to their established functions in a known manner, as reflected by, *e.g.*, the teachings cited in Exhibits D0-D4. A POSITA would thus have had a reasonable expectation in success in combining the teachings of these references, yielding the Asserted Claims of the ’809 Patent.

(e) Inactivity Timer References

As set forth in Exhibits D0-D4, each of the Inactivity Timer References (e.g., Lee ’099, R2-080266, and Sarkkinen) anticipates and alternatively renders obvious the Asserted Claims of the ’809 Patent. Alternatively, a POSITA would have been motivated to combine the teachings of each of the Resource Releasing References, Status Reporting References, E-DCH References, and/or HARQ Process References with the teachings of the Inactivity Timer References. For example, a POSITA would have been motivated to apply RP-080266’s teaching of using an

inactivity timer to "trigger an implicit release of E-DCH resources" to Wager's system to release E-DCH resources.

A POSITA would have been motivated to apply the teachings of the Inactivity Timer References to the teachings of the Resource Releasing References, Status Reporting References, E-DCH References, and/or HARQ Process References by, for example, implementing an inactivity timer within each of these references. It was well-understood to use inactivity timers to determine when resources are no longer in use within a network to advantageously use networking resources more efficiently. Such timers "may serve as a backup release process in the event other processes do not detect or determine the resource is ready to be released," advantageously preventing resources from being needless tied up because of a communication failure. *See, e.g.*, Sarkinnen, at [0037]. Indeed, such timers were well-understood and included in well-known standards documentation, including R2-080266. Applying teachings from the Inactivity Timer References therefore would have been nothing more than a combination of prior art elements according to known methods to yield predictable results, a use of a known technique to improve similar devices in the same way, and an application of a known technique to a known device yielding predictable results.

A POSITA would have expected success in modifying the Resource Releasing References, Status Reporting References, E-DCH References, and HARQ Process References to apply the teachings of the Inactivity Timer References. These combinations of prior art references would have involved no more than the predictable use of prior art elements according to their established functions in a known manner, as reflected by, e.g., the teachings cited in Exhibits D0-D4. A POSITA would thus have had a reasonable expectation in success in combining the teachings of these references, yielding the Asserted Claims of the '809 Patent.

(f) Hardware References

A POSITA would have been further motivated to apply the teachings of the Hardware References (*e.g.*, Chun, Eckert, Terry '266, Terry '722) to one another and/or to the teachings of the Resource Releasing References, Status Reporting References, E-DCH References, HARQ Process References, and/or Inactivity Timer References.

Each of the Hardware References discloses interrelated teachings about the hardware components of devices in a networked system, such as a transceiver and/or controller, that are used to implement a user equipment device that is capable of communicating with other network devices and processing communications in a network. As reflected in the Hardware References, hardware design choices were well known for how to implement communication apparatuses used for wireless communications. Based on their similar, interrelated teachings, a POSITA would have been motivated to combine these teachings in order to improve the hardware design and performance of the communication apparatus. A POSITA also would have been motivated to combine these teachings for their additional detail on how to implement the hardware of the device to advantageously implement a device capable of effectively communicating according to its intended purpose. A POSITA would have recognized the benefits of combining the teachings of the Hardware References with one another.

A POSITA would have expected success in combining the teachings of the Resource Releasing References, Status Reporting References, E-DCH References, HARQ Process References, Inactivity Timer References, and/or Cell Reselection References as described above. These combinations of prior art references would have involved no more than the predictable use of prior art elements according to their established functions in a known manner, as reflected by, e.g., the teachings cited in Exhibits D0-D4. A POSITA would thus have had a reasonable

expectation in success in combining the teachings of these references, yielding the Asserted Claims of the ’809 Patent.

5. Identification of Each Item of Prior Art that Anticipates Each Asserted Claim of the ’486 Patent and Each Reference and Combination of References that Renders Obvious the Asserted Claims of the ’486 Patent

The following is a list of prior art references that, either alone, or in combination with the teachings or knowledge of a person of ordinary skill in the art, the Admitted Prior Art, and/or the additional prior art references discussed below or in Exhibits E0-E6, would have rendered obvious claims 3 and 4 of the ’486 Patent, including as indicated in the associated claim charts.

Prior Art Patents		
Issued Patent/Patent Publication Number	**Country of Origin**	**Date of Issue/Publication**
EP1231735A2 (“Kim-735”)	EP	08.14.2002
EP1258085A1 (“Wiedmann-085”)	EP	11.20.2002
US Patent No. 20020015419A1 (“Kim-419”)	US	02.07.2002
US Patent No. 20020172292A1 (“Gray-292”)	US	11.21.2002
US Patent No. 20020149496A1 (“Dabak-496”)	US	10.17.2002
US Patent No. 20030133497A1 (“Kinjo-497”)	US	07.17.2003
US Patent No. 6028897 (“Wang-897”)	US	02.22.2000
US Patent No. 6298463B1 (“Bingeman-463”)	US	10.2.2001
US Patent No. 6744744 (“Tong-744”)	US	06.01.2004
US Patent No. 7200792	US	04.03.2007

Prior Art Patents		
Issued Patent/Patent Publication Number	**Country of Origin**	**Date of Issue/Publication**
("Kim-792")		
US Patent No. 7260770B2 ("Stewart")	US	08.21.2007
US Patent No. 7280606B2 ("Kim-606")	US	10.09.2007
US Patent No. 7283509B2 ("Moon-509")	US	10.16.2007
WO Patent No. 0137433A1 ("Ghosh-433")	WO	05.25.2001
WO Patent No. 02099994A1 ("Botha-994")	WO	12.12.2002
WO 2002067434A1 ("Kim-434")	WO	08.29.2002
US Patent No. 20050094667A1 ("Dahlman-667")	US	05.05.2005

Prior Art Publications			
Author	**Title**	**Date of Publication**	**Publisher**
Amitava Ghosh, et al.	Incremental Redundancy (IR) Schemes for W-CDMA HS-DSCH	2002	IEEE
3GPP	RP-020255, 3rd Generation Partnership Project; Technical Specification Group Radio Access Network; High Speed Downlink Packet Access: Physical Layer Aspects (Release 5), 3GPP TR	2001	3GPP Organizational Partners (ARIB, CWTS, ETSI, T1, TTA, TTC)

Prior Art Publications			
Author	**Title**	**Date of Publication**	**Publisher**
	25.858 V2.0.0		
Motorola	R1-01-1014, A New Hybrid-ARQ Scheme Using Incremental Redund	2001	3GPP Organizational Partners (ARIB, CWTS, ETSI, T1, TTA, TTC)
Nokia	R1-01-1023, Hybrid ARQ scheme for HSDPA	2001	3GPP Organizational Partners (ARIB, CWTS, ETSI, T1, TTA, TTC)
Texas Instruments	R1-01-1026, Two stage rate matching for 3GPP HSDPA	2001	3GPP Organizational Partners (ARIB, CWTS, ETSI, T1, TTA, TTC)
Siemens	R1-01-1028, Implementation of Incremental Redundancy by means of Rate Matching	2001	3GPP Organizational Partners (ARIB, CWTS, ETSI, T1, TTA, TTC)
Samsung	R1-01-1041, Harmonization of SMP and the advanced retransmission Technologies	2001	3GPP Organizational Partners (ARIB, CWTS, ETSI, T1, TTA, TTC)
Ericsson	R1-01-1045, Rate Matching for Incremental Redundancy in HSDPA	2001	3GPP Organizational Partners (ARIB, CWTS, ETSI, T1, TTA, TTC)
Ericsson et al.	R1-01-1047, Overview of Proposed Schemes for Incremental Redundancy	2001	3GPP Organizational Partners (ARIB, CWTS, ETSI, T1, TTA, TTC)
Panasonic	R1-01-1059, Comparison of HARQ Schemes for 16-QAM	2001	3GPP Organizational Partners (ARIB, CWTS, ETSI, T1, TTA, TTC)
OKI	R1-01-1070, A Simple Incremental Redundancy Scheme	2001	3GPP Organizational Partners (ARIB, CWTS, ETSI, T1,

Prior Art Publications			
Author	**Title**	**Date of Publication**	**Publisher**
	for HSDPA		TTA, TTC)
3GPP	Universal Mobile Telecommunications System (UMTS); Multiplexing and channel coding (FDD) (3GPP TS 25.212 version 5.1.0 Release 5)	2002	3GPP Organizational Partners (ARIB, CWTS, ETSI, T1, TTA, TTC)
Motorola	R1-00-1396, Performance Comparison of Hybrid-ARQ Schemes	2000	3GPP Organizational Partners (ARIB, CWTS, ETSI, T1, TTA, TTC)

LG contends that, as set forth below, these references disclose and at least render obvious the Asserted Claims of the ’486 patent. LG further contends that claims that are anticipated by a particular reference are also rendered obvious by that same reference alone, or in combination with the teachings of other references.

Prior Art Anticipating, and/or Rendering Obvious Asserted Claims of the ’486 Patent	
Primary Reference (Anticipation and Obviousness)	**Alternatively, Obviousness in View of, E.g.:**
Kim-434	APA, Kinjo-497, Motorola, Stewart, and/or TS 25.212 V5.1.0, Dahlman-667, R1-00-1396, R1-01-1023, R1-01-1026, R1-01-1028, R1-01-1041, R1-01-1045, R1-01-1047, R1-01-1070
Kim-735	APA, Kim-434, Kinjo-497, Motorola, Stewart, and/or TS 25.212 V5.1.0, Dahlman-667, R1-00-1396, R1-01-1023, R1-01-1026, R1-01-1028, R1-01-1041, R1-01-1045, R1-01-1047, R1-01-1070
Kinjo-497	APA, Kim-434, Kim-735, Motorola, Stewart, and/or TS 25.212 V5.1.0, Dahlman-667, R1-00-1396, R1-01-1023, R1-01-1026, R1-01-1028, R1-01-1041, R1-01-1045, R1-01-1047, R1-01-1070
Motorola	APA, Kim-434, Kim-735, Kinjo-497, Stewart, and/or TS 25.212 V5.1.0, Dahlman-667, R1-00-1396, R1-01-1023, R1-01-1026, R1-01-1028, R1-01-1041, R1-

Prior Art Anticipating, and/or Rendering Obvious Asserted Claims of the ’486 Patent	
Primary Reference (Anticipation and Obviousness)	**Alternatively, Obviousness in View of, E.g.:**
	01-1045, R1-01-1047, R1-01-1070
Stewart	APA, Kim-434, Kim-735, Kinjo-497, Motorola, TS 25.212 V5.1.0, Dahlman-667, R1-00-1396, R1-01-1023, R1-01-1026, R1-01-1028, R1-01-1041, R1-01-1045, R1-01-1047, R1-01-1070
TS 25.212 V5.1.0	APA, Kim-434, Kim-735, Kinjo-497, Motorola, Stewart, Dahlman-667, R1-00-1396, R1-01-1023, R1-01-1026, R1-01-1028, R1-01-1041, R1-01-1045, R1-01-1047, R1-01-1070

A person of ordinary skill in the art would have been motivated and had a reasonable expectation of success to make these combinations because, for example, each would have been merely: (a) a combination of prior art elements according to known methods to yield predictable results; (b) a simple substitution of one known element for another to obtain predictable results; (c) a use of a known technique to improve similar devices in the same way; (d) application of a known technique to a known device ready for improvement to yield predictable results; (e) obvious to try; and/or (f) known work in one field of endeavor prompting variations of it for use in either the same field or a different one based on design incentives or other market forces since the variations are predictable to one of ordinary skill in the art.

Additionally, a POSITA, at the time of the Claimed Priority Date, would have been motivated to combine the teachings of these references, *e.g.*, as set forth in Exhibits E0-E6. The ’486 Patent relates to a Hybrid Automatic Repeat Request (“HARQ”) process implemented in wireless communications. *E.g.*, ’486, 1:35-45, 6:4-12, 8:16-27, Fig. 1. The ’486 Patent further describes an “incremental redundancy (IR)” process that sends varying amounts of information in “systematic bits” and “parity bits”—the amounts vary during a retransmission of information, depending on how much information was successfully received and processed from a prior

transmission. ’486, 8:16-27, 10:20-28, 18:15-55. Similar to the ’486 Patent, the cited references relate, directly or indirectly, to such retransmission processes. *See, e.g.,* Exhibits E0-E6; Kim-434 at 1:8-12 (“The present invention relates generally to an code generation apparatus … in an ARQ (Automatic Repeat reQuest) packet communication system.”), Kim-735 at [0002] (“The present invention relates generally to … a packet communications system or a general communications system that employs a retransmission scheme.”), Kinjo-497 at [0002] (“The present invention relates to Automatic Repeat Requests (ARQ) to obtain high speed data packet access (HSDPA) or transmission”), Motorola at p.1 (“In this contribution a simple IR scheme based on block interleaving and symbol priority mapping is proposed”), Stewart at 2:47-50 (“The present invention provides a turbo coder that supports incremental redundancy (IR) as a form of ARQ combining”), and TS 25.212 V5.1.0 at pp. 56-57 (“hybrid ARQ”); Dahlman-667; R1-00-1396; R1-01-1023; R1-01-1026; R1-01-1028; R1-01-1041; R1-01-1045; R1-01-1047; R1-01-1070. Accordingly, each of these references all relate to the same field of endeavor and/or address the same or a similar problem, and a POSITA would have been motivated—and would have found it straightforward and obvious—to combine their teachings, with a reasonable expectation of success, in a matter that meets each element of the Asserted Claims of the ’486 Patent.

(a) HARQ References

As set forth in Exhibits E0-E6, each of the HARQ References (*e.g.*, Kim-435, Kinjo-497, Motorola, Stewart, TS 25.212 V5.1.0, Dahlman-667, R1-01-1045, R1-01-1028, R1-01-1070, R1-01-1041, R1-01-1026, R1-01-1023, R1-00-1396, and R1-01-1047) anticipates and, alternatively, renders obvious the Asserted Claims of the ’486 Patent.

Alternatively, a POSITA would have been motivated—and would have found it straightforward and obvious—to combine the teachings of each of the HARQ References with

the teachings of any of the other HARQ References. Each of these references are directed to known systems and techniques that use retransmission schemes, including HARQ to facilitate delivery of information between a transmitting device and a receiving device. *E.g.,* Kim-434 at 1:8-12 ("The present invention relates generally to an code generation apparatus … in an ARQ (Automatic Repeat reQuest) packet communication system."), Kim-735 at [0002] ("The present invention relates generally to … a packet communications system or a general communications system that employs a retransmission scheme."), Kinjo-497 at [0002] ("The present invention relates to Automatic Repeat Requests (ARQ) to obtain high speed data packet access (HSDPA) or transmission"), Motorola at p.1 ("In this contribution a simple IR scheme based on block interleaving and symbol priority mapping is proposed"), Stewart at 2:47-50 ("The present invention provides a turbo coder that supports incremental redundancy (IR) as a form of ARQ combining"), and TS 25.212 V5.1.0 at pp. 56-57 ("hybrid ARQ"), Dahlman-667 at Abstract ("The present invention provides a flexible ARQ scheme"), R1-00-1396 at Introduction ("Automatic -Repeat-Request (ARQ) schemes are used in packet data communication system"), R1-01-1023 at §2.2 ("HARQ processes"), R1-01-1026 at §1 ("incremental redundancy (IR) was accepted as a base line of the Hybrid ARQ scheme"), R1-01-1028 at §1 ("a HSDPA scheme with incremental redundancy"), R1-01-1041 at §1 ("advanced retransmission technologies"), R1-01-1045 at §1 ("incremental redundancy (IR) scheme for the HARQ"), R1-01-1047 at §1 ("implementation of incremental redundancy for HSDPA"), R1-01-1070 at §1 ("implementation of incremental redundancy for HSDPA"). Moreover, each of the HARQ references describe implementations for a receiving device to indicate to a transmitting device to retransmit information not received at the receiving device. A POSITA would have understood that combining the teachings of the HARQ retransmission techniques of the HARQ References

would be using known techniques to improve similar devices in the same way, or applying known HARQ retransmission techniques to yield predictable results in improving throughput and reliability of communications.

A POSITA would have expected success in modifying the HARQ References as described above. These combinations of prior art references would have involved no more than the predictable use of prior art elements according to their established functions in a known manner, as reflected by, e.g., the teachings cited in Exhibits E0-E6. A POSITA would thus have had a reasonable expectation in success in combining the teachings of these references, yielding the Asserted Claims of the '486 Patent.

(b) Buffering References

As set forth in Exhibits E0-E6, each of the Buffering References (*e.g.*, Kim-434, Kim-735, Kinjo-497, Motorola, Stewart, TS 25.212 V5.1.0 and Dahlman-667, R1-00-1396, R1-01-1023, R1-01-1026, R1-01-1028, R1-01-1041, R1-01-1045, R1-01-1047, and R1-01-1070) anticipates and, alternatively, renders obvious the Asserted Claims of the '486 Patent.

Alternatively, a POSITA would have been motivated—and would have found it straightforward and obvious—to modify the teachings of each of the Buffering References with the teachings of any of the other Buffer References. Each of these references are directed to known systems and techniques that use a buffer in wireless communications, to facilitate transmission or retransmission of information. *E.g.,* Kim-434 at 12:23-13:1 ("Alternatively, the interleaved symbols are stored in a circular buffer memory and a sub-code is generated by selecting symbols recursively."), Kim-735 at [0046] ("Alternatively, the interleaved symbols can be stored in a circular buffer memory."), Kinjo-497 at [0007] ("“virtual buffer”"), Motorola at p.2-3 ("interleaver"), Stewart at Figs. 2-3, 2:47-67 ("block nature of the interleaver"), and TS 25.212 V5.1.0 at §4.5.4 ("virtual IR buffering"), Dahlman-667 at [0031] ("retransmission buffer

4"), R1-00-1396 at Introduction ("Automatic -Repeat-Request (ARQ) schemes are used in packet data communication system"), R1-01-1023 at §2.2 ("HARQ processes"), R1-01-1026 at §1 ("incremental redundancy (IR) was accepted as a base line of the Hybrid ARQ scheme"), R1-01-1028 at §1 ("a HSDPA scheme with incremental redundancy"), R1-01-1041 at §1 ("advanced retransmission technologies"), R1-01-1045 at §1 ("incremental redundancy (IR) scheme for the HARQ"), R1-01-1047 at §1 ("implementation of incremental redundancy for HSDPA"), R1-01-1070 at §1 ("implementation of incremental redundancy for HSDPA"). A POSITA would have understood the combining the teachings of the Buffering References would be using known techniques to improve similar devices in the same way, or applying known HARQ techniques to yield predictable results in improving throughput of communications.

Additionally, a POSITA would have been motivated to further modify each of the Buffering References with the teachings of any of the HARQ References. For example, each of the Buffering References teaches how to use a buffer to store information. The HARQ references describe retransmission schemes that use buffers to improve the reliability and throughput of wireless communications by facilitating the retransmission of bits by a transmitter device, where said bits were not correctly received by a receiving device. A POSITA would have understood that combining the teachings of the HARQ retransmission techniques of the HARQ References with the buffers of the Buffering References would be using known techniques to improve similar devices in the same way, or applying known HARQ retransmission techniques with buffers to store information for retransmission to yield predictable results in improving throughput and reliability of communications.

A POSITA would have expected success in modifying the Buffering References as described above. These combinations of prior art references would have involved no more than

the predictable use of prior art elements according to their established functions in a known manner, as reflected by, e.g., the teachings cited in Exhibits E0-E6. A POSITA would thus have had a reasonable expectation in success in combining the teachings of these references, yielding the Asserted Claims of the ’486 Patent.

(c) Redundancy Versions References

As set forth in Exhibits E0-E6, each of the Redundancy Versions References (*e.g.*, Kim-434, Kim-735, Kinjo-497, Motorola, Stewart, TS 25.212 V5.1.0 and Dahlman-667, R1-00-1396, R1-01-1023, R1-01-1026, R1-01-1028, R1-01-1041, R1-01-1045, R1-01-1047, and R1-01-1070), anticipates and alternatively renders obvious the Asserted Claims of the ’486 Patent. Alternatively, a POSITA would have been motivated—and would have found it straightforward and obvious—to modify the teachings of each of the Redundancy Versions References with the teachings of any of the other Redundancy Versions References in order to implement redundancy versions in a retransmission scheme to improve system throughput and performance. Each of these references are directed to various ways of using redundancy versions to signal the selection of systematic bits and parity bits for a transmission in a wireless communications network. *See e.g.,* Motorola at Figs. 4-5, Stewart at Fig. 6, TS 25.212 V5.1.0 at §4.5.4.3 (“The parameter s can take the value 0 or 1 to distinguish between transmissions that prioritise systematic bits (s = 1) and non systematic bits (s = 0)”) and, R1-01-1047 (summarizing various implementations of redundancy versions in Motorola, R1-01-1023, R1-01-1026, R1-01-1028, R1-01-1041, R1-01-1045, and R1-01-1070). For example, it was known that different redundancy versions would signal retransmission of different combinations of systematic bits and parity bits depending on the channel condition and throughput of data. A POSITA would have found it an obvious design choice to use different types of redundancy versions to select different amounts of parity bits and redundancy bits given variety of redundancy versions that

were known in the art. A POSITA would have understood that combining the teachings of the redundancy versions of the Redundancy Versions References would be using known techniques to improve similar devices in the same way, or applying known redundancy versions with each other to yield predictable results in improving throughput and reliability of communications.

Additionally, a POSITA would have been motivated to further modify each of the HARQ References with the teachings of any of the Redundancy Versions References. For example, each of the HARQ References teaches how to implement a retransmission scheme in wireless communications systems, and each of the Redundancy Versions References teaches how to select bits for retransmission. A POSITA would have found it an obvious design choice to use the redundancy versions in the retransmission schemes. A POSITA would have understood that using the redundancy versions to implement the retransmission scheme would increase system throughput and improve overall system performance. For example, an increase in wireless throughput and efficiency of retransmission improves overall effectiveness of wireless communications. A POSITA would have understood that combining the teachings of the redundancy versions of the Redundancy Versions References with the retransmission schemes of the HARQ references would be using known techniques to improve similar devices in the same way, or applying known redundancy versions with retransmission schemes to yield predictable results in improving throughput and reliability of communications.

Additionally, a POSITA would have been motivated to further modify each of the HARQ References with the teachings of any of the Redundancy Versions References and/or Buffering References. For example, each of the HARQ References describes retransmission schemes, each of the Buffering References teaches how to use buffers in wireless communications systems, and each of the Redundancy Versions References teaches how to select bits for retransmission from

storage (e.g., a buffer). A POSITA would have understood that combining the teachings of the redundancy versions of the Redundancy Versions References with the retransmission schemes of the HARQ references and the buffers of the Buffering references would be using known buffer techniques with known retransmission techniques and redundancy versions to improve similar devices in the same way, or applying known redundancy versions with retransmission schemes to yield predictable results in improving throughput and reliability of communications.

A POSITA therefore would have been motivated to apply these teachings, yielding a system in which redundancy versions are used by a transmitting device to select different combinations of bits from a buffer for retransmission, depending on wireless channel conditions between the transmitting device (e.g., a mobile phone) and a receiving device (e.g., a base station), or vice versa.

A POSITA would have expected success in modifying the Redundancy Versions References, Buffering References, and HARQ References as described above, and would have looked to each of these other references, with related and complementary disclosures, for additional advantageous teachings when implementing the processes taught by the Redundancy Versions References. These combinations of prior art references would have involved no more than the predictable use of prior art elements according to their established functions in a known manner, as reflected by, e.g., the teachings cited in Exhibits E0-E6. A POSITA would thus have had a reasonable expectation in success in combining the teachings of these references, yielding the Asserted Claims of the ’486 Patent.

6. Identification of Each Item of Prior Art that Anticipates Each Asserted Claim of the ’839 Patent and Each Reference and Combination of References that Renders Obvious the Asserted Claims of the ’839 Patent

The following is an identification of prior art references that, either alone, or in combination with the teachings or knowledge of a person of ordinary skill in the art, the Admitted Prior Art, and/or the additional prior art references discussed below or in Exhibits F1-F10, would have rendered obvious claims 1 and 2 of the ’839 Patent, including as indicated in the associated claim charts.

Prior Art Patents – ’839		
Issued Patent/Patent Publication Number	**Country of Origin**	**Date of Issue/Publication**
US20010021649A1 ("Kinnunen")	US	9/13/2001
US20020006117A1 ("Duske")	US	1/17/2002
US6985720 ("Qu")	US	1/10/2006
US20040015548 ("Lee")	US	1/22/2004
US20050130631 ("Maguire")	US	6/16/2005
US20020130904 ("Becker")	US	9/19/2002
US20020152220 ("Kang")	US	10/17/2002
US20050193345 ("Klassen")	US	9/1/2005
US20040137884 ("Engstrom")	US	7/15/2004
US7412491 ("Gusler")	US	8/12/2008
US7383307 ("Kirkland")	US	6/3/2008
US20040110491 ("Ozaki")	US	6/10/2004
US8204939 ("Nielson")	US	6/19/2012
US20030020749 ("Abu-hakima")	US	1/30/2003
US8020105 ("Lemay")	US	9/13/2011
US7765263 ("Alfke")	US	7/27/2010
WO0139577 ("Salmi")	WO	6/7/2001

Prior Art Patents – ’839		
Issued Patent/Patent Publication Number	**Country of Origin**	**Date of Issue/Publication**
US20050275633 ("Varanda")	US	12/15/2005

Prior Art Publications – ’839			
Author	**Title**	**Date of Publication**	**Publisher**
3GPP	3GPP TS 23.140 v6.4.0 (2003-12)	2003	3GPP Organizational Partners (ARIB, CWTS, ETSI, T1, TTA, TTC)
3GPP	3GPP TS 24.011 v5.2.0 (2003-06)	2003	3GPP Organizational Partners (ARIB, CWTS, ETSI, T1, TTA, TTC)
Research in Motion LTD	BlackBerry 7230 User Guide	2003	Research in Motion LTD
International Telecommunication Union	ITU-T E.164 (05/97)	1997	International Telecommunication Union
N. Freed	RFC 2045	1996	Network Working Group
M. Day	RFC 2779	2000	Network Working Group
P. Resnick	RFC 2822	2001	Qualcomm
Wireless Application Protocol Forum	Wireless Application Protocol MMS Encapsulation Protocol Version 05-Jan-2002 (“WAP-209-MMSEncapsulation-20020105-a”)	2002	Wireless Application Protocol Forum

LG contends that, as set forth below, these references disclose and at least render obvious the Asserted Claims of the ’839 patent. LG further contends that claims that are anticipated by a

particular reference are also rendered obvious by that same reference alone, or in combination with the teachings of other references.

Prior Art Anticipating, and/or Rendering Obvious Asserted Claims of the ’839 Patent	
Primary Reference (Anticipation and Obviousness)	**Alternatively, Obviousness in View of, E.g.:**
Kang	APA, 3GPP TS 23.140 v6.4.0, 3GPP TS 24.011 v5.2.0, Abu-Hakima, Alfke, Becker, BlackBerry 7230 User Guide, Duske, Engstrom, Gusler, ITU-T E.164, Kinnunen, Kirkland, Klassen, Lee, Lemay, Maguire, Motorola A925 System, Nielson, Nokia 6600 System, Nokia 7610 System, Ozaki, Qu, RFC 2045, RFC 2779, RFC 2822, Salmi, Sony Ericsson P900 Smartphone System, Varanda, and WAP-209-MMSEncapsulation-20020105
Klassen	APA, 3GPP TS 23.140 v6.4.0, 3GPP TS 24.011 v5.2.0, Abu-Hakima, Alfke, Becker, BlackBerry 7230 User Guide, Duske, Engstrom, Gusler, ITU-T E.164, Kang, Kinnunen, Kirkland, Lee, Lemay, Maguire, Motorola A925 System, Nielson, Nokia 6600 System, Nokia 7610 System, Ozaki, Qu, RFC 2045, RFC 2779, RFC 2822, Salmi, Sony Ericsson P900 Smartphone System, Varanda, and WAP-209-MMSEncapsulation-20020105
Lee	APA, 3GPP TS 23.140 v6.4.0, 3GPP TS 24.011 v5.2.0, Abu-Hakima, Alfke, Becker, BlackBerry 7230 User Guide, Duske, Engstrom, Gusler, ITU-T E.164, Kang, Kinnunen, Kirkland, Klassen, Lemay, Maguire, Motorola A925 System, Nielson, Nokia 6600 System, Nokia 7610 System, Ozaki, Qu, RFC 2045, RFC 2779, RFC 2822, Salmi, Sony Ericsson P900 Smartphone System, Varanda, and WAP-209-MMSEncapsulation-20020105
Lemay	APA, 3GPP TS 23.140 v6.4.0, 3GPP TS 24.011 v5.2.0, Abu-Hakima, Alfke, Becker, BlackBerry 7230 User Guide, Duske, Engstrom, Gusler, ITU-T E.164, Kang, Kinnunen, Kirkland, Klassen, Lee, Maguire, Motorola A925 System, Nielson, Nokia 6600 System, Nokia 7610 System, Ozaki, Qu, RFC 2045, RFC 2779, RFC 2822, Salmi, Sony Ericsson P900 Smartphone System, Varanda, and WAP-209-MMSEncapsulation-20020105
Maguire	APA, 3GPP TS 23.140 v6.4.0, 3GPP TS 24.011 v5.2.0, Abu-Hakima, Alfke, Becker, BlackBerry 7230 User Guide, Duske, Engstrom, Gusler, ITU-T E.164, Kang, Kinnunen, Kirkland, Klassen, Lee, Lemay, Motorola A925 System, Nielson, Nokia 6600 System, Nokia 7610 System, Ozaki, Qu, RFC 2045, RFC 2779, RFC 2822,

Prior Art Anticipating, and/or Rendering Obvious Asserted Claims of the '839 Patent	
Primary Reference (Anticipation and Obviousness)	**Alternatively, Obviousness in View of, E.g.:**
	Salmi, Sony Ericsson P900 Smartphone System, Varanda, and WAP-209-MMSEncapsulation-20020105
Motorola A925 System	APA, 3GPP TS 23.140 v6.4.0, 3GPP TS 24.011 v5.2.0, Abu-Hakima, Alfke, Becker, BlackBerry 7230 User Guide, Duske, Engstrom, Gusler, ITU-T E.164, Kang, Kinnunen, Kirkland, Klassen, Lee, Lemay, Maguire, Nielson, Nokia 6600 System, Nokia 7610 System, Ozaki, Qu, RFC 2045, RFC 2779, RFC 2822, Salmi, Sony Ericsson P900 Smartphone System, Varanda, and WAP-209-MMSEncapsulation-20020105
Nokia 6600 System	APA, 3GPP TS 23.140 v6.4.0, 3GPP TS 24.011 v5.2.0, Abu-Hakima, Alfke, Becker, BlackBerry 7230 User Guide, Duske, Engstrom, Gusler, ITU-T E.164, Kang, Kinnunen, Kirkland, Klassen, Lee, Lemay, Maguire, Motorola A925 System, Nielson, Nokia 7610 System, Ozaki, Qu, RFC 2045, RFC 2779, RFC 2822, Salmi, Sony Ericsson P900 Smartphone System, Varanda, and WAP-209-MMSEncapsulation-20020105
Nokia 7610 System	APA, 3GPP TS 23.140 v6.4.0, 3GPP TS 24.011 v5.2.0, Abu-Hakima, Alfke, Becker, BlackBerry 7230 User Guide, Duske, Engstrom, Gusler, ITU-T E.164, Kang, Kinnunen, Kirkland, Klassen, Lee, Lemay, Maguire, Motorola A925 System, Nielson, Nokia 6600 System, Ozaki, Qu, RFC 2045, RFC 2779, RFC 2822, Salmi, Sony Ericsson P900 Smartphone System, Varanda, and WAP-209-MMSEncapsulation-20020105
Sony Ericsson P900 Smartphone System	APA, 3GPP TS 23.140 v6.4.0, 3GPP TS 24.011 v5.2.0, Abu-Hakima, Alfke, Becker, BlackBerry 7230 User Guide, Duske, Engstrom, Gusler, ITU-T E.164, Kang, Kinnunen, Kirkland, Klassen, Lee, Lemay, Maguire, Motorola A925 System, Nielson, Nokia 6600 System, Ozaki, Qu, RFC 2045, RFC 2779, RFC 2822, Salmi, Sony Ericsson P900 Smartphone System, Varanda, and WAP-209-MMSEncapsulation-20020105

A person of ordinary skill in the art would have been motivated and had a reasonable expectation of success to make these combinations because, for example, each would have been merely: (a) a combination of prior art elements according to known methods to yield predictable results; (b) a simple substitution of one known element for another to obtain predictable results; (c) a use of a known technique to improve similar devices in the same way; (d) application of a

known technique to a known device ready for improvement to yield predictable results; (e) obvious to try; and/or (f) known work in one field of endeavor prompting variations of it for use in either the same field or a different one based on design incentives or other market forces since the variations are predictable to one of ordinary skill in the art.

Additionally, a POSITA, at the time of the Claimed Priority Date, would have been motivated to combine the teachings of these references, *e.g.*, as set forth in Exhibits F0-F10. The '839 patent states that that the "field of the invention" relates to "a wireless communication terminal having a function of providing an integrated messaging service." *E.g.* '839 patent, 1:8-10. More particularly, the '839 states that it relates to "a wireless communication terminal and a method for transmitting and receiving various kinds of messages, e.g., a text message and a multimedia message, by using an integrated messaging service program without changing a transmission protocol or a network." *Id.* 1:10-15. Similar to the '839 patent, all of the cited references relate, directly or indirectly, to an integrated messaging service capable of transmitting and receiving various kinds of messages. *See, e.g.*, Exhibits F0-F10; Lee [0002] ("The present invention relates generally to wireless communication systems incorporating speech and textual input and output modalities"); Maguire [0002] ("This invention relates generally to a user interface for messaging. More particularly, the invention relates to user interfaces for displaying a communications event in context with select stored communications events."); Becker [0003] ("The present invention relates to management of multiple messaging sessions, and more particularly to management of multiple messaging sessions between a user and various pals with a graphical user interface."); Kang [0002] ("The present invention relates to a message displaying and transmitting method of a personal information terminal, more particularly, to a method of displaying several types of messages all together through a single

window and of enabling a user to write and transmit a message with no consideration of message type."); Klassen [0001] ("The present invention relates generally to communication systems and more specifically to a system and method for the display and management of messages in such systems."); Engstrom [0002] ("The present invention pertains to the field of wireless mobile communication. More particularly, the present invention relates to a unified thread of communication with a communication partner or a group of communication partners for wireless mobile communication devices."); Lemay 1:18-22 ("This disclosure relates generally to user interfaces for processing (e.g., generating, storing, displaying or otherwise presenting, transmitting and/or receiving, etc.) electronic communication, and in particular, relates to a unified user interface for instant messaging and electronic mail."); Motorola A925 3G Smartphone System (mobile device implementing an integrated messaging system); Nokia 6600 Smartphone System (same); Nokia 7610 Smartphone System (same); Sony Ericsson P900 Smartphone System (same); Salmi Abstract ("The object of the invention is a system, a device, a terminal and a method for filtering electronic information to be transferred to the terminal through a telecommunication connection."); Duske [0002] ("The present invention relates to mobile communications terminal in wireless communications systems. More specifically, the present invention relates to mobile communications terminals sending and receiving pre-formatted text and binary messages to a central facility using a satellite communications system."); Kinnunen [0001] ("The present invention relates to a messaging interface for a communication device, particularly although not exclusively a radiotelephone handset."); Varanda [0001] ("The method and apparatus recited herein relates to touchscreen displays, and in particular relates to virtual keypads for these touchscreen displays."); Qu 1:11-12 ("This invention relates to wireless communication, and more particularly to message services in a

multiple communication modes environment.”); Gusler 1:8-13 (“The present invention relates generally to an improved data processing system and in particular, to a method, apparatus, and computer instructions for processing and displaying messages. Still more particularly, the present invention provides an improved method, apparatus, and computer instructions for enhancements in instant messaging systems.”); Kirkland 1:20-25 (“The present invention relates generally to an improved data processing system for processing and displaying messages. In particular, the present invention provides a method, apparatus, and computer instructions for managing the delivery of multiple instant messaging sessions to multiple paired delivery points.”); Ozaki [0001] (“The present invention relates to a portable terminal suitable for displaying a related electronic mail, a method of displaying an electronic mail, and a program for displaying the electronic mail. More specifically, the invention relates to a technique for automatically editing and displaying the related mail by an easy operation in a state where the electronic mail is displayed.”); Nielson 1:10-12 (“Embodiments of the present invention relate to the integration of instant messaging functionality with the existing functionality of mobile telephones”); Abu-Hakima [0001] (“The invention pertains to the field of system architectures for the organization and presentation of electronic documents, particularly for presenting electronic messages and/or documents (including unified messages comprising email, voice mail and/or fax) on a user's electronic display screen.”); Alfke Abstract (“Methods and apparatuses for processing electronic messages are described herein.”) 1:6-8 (“The present invention relates generally to data processing. More particularly, this invention relates to electronic message processing.”); 3GPP TS 23.140 v6.4.0 (network communication and messaging standard document); 3GPP TS 24.011 v5.2.0 (same); RFC 2822 (same); RFC 2779 (same); RFC 2045 (same); ITU-T E.164 (same); WAP-209-MMSEncapsulation-20020105-a (same); BlackBerry 7230 User Guide (user guide for

a mobile device implementing an integrated messaging system). Accordingly, each of these references relate to the same field of endeavor and/or address the same or a similar problem, and a POSITA would have been motivated—and would have found it straightforward and obvious—to combine their teachings, with a reasonable expectation of success, in a matter that meets each element of the Asserted Claims of the ’839 patent.

(a) Integrated Interface References

As set forth in Exhibits F0-F10, each of the Integrated Interface References (*e.g.*, Abu-Hakima, Alfke, Duske, Engstrom, Kang, Kirkland, Klassen, Lee, Lemay, Maguire, Motorola A925, Nokia 6600, Nokia 7610, Qu, Salmi, Sony Ericsson P900, Messaging Services APA) anticipates and, alternatively, renders obvious the Asserted Claims of the ’839 patent. Alternatively, a POSITA would have been motivated to combine the teachings of each Integrated Interface References with the teachings of any of the other Integrated Interface References. Each of the Integrated Interface References teaches ways to integrate different types of messages—such as text messages, multimedia messages, email messages, instant chat messages, voice messages, fax correspondences, and the like—into a single display or interface. For example, by presenting the user with an integrated inbox where they can advantageously view both their received emails and received text messages in a single convenient location using their wireless hand-held device. Each of these references discloses known and compatible techniques for improving the interface of a user device by displaying different message types together. These interrelated teachings would have motivated a POSITA to look to each of the other Integrated Interface References, with related and complementary disclosures, for additional advantageous teachings to apply when processing messages to be displayed on a user device—for example, by placing messages into one location to improve the user interface and increase the ease with which users are able to send, receive, and review correspondences. Moreover, a POSITA would

have been motivated—and would have found it straightforward and obvious—to apply the teachings of each of the Integrated Interface References to the other Integrated Interface References to advantageously improve the design of messaging applications on a device.

A POSITA would have expected success in modifying the Integrated Interface References as described above. These combinations of prior art references would have involved no more than the predictable use of prior art elements according to their established functions in a known manner, as reflected by, *e.g.*, the teachings cited in Exhibits F0-F10. A POSITA would thus have had a reasonable expectation in success in combining the teachings of these references, yielding the Asserted Claims of the ’839 Patent.

(b) Unified Inbox and Outbox References

As set forth in Exhibits F0-F10, each of the Unified Inbox and Outbox References (e.g., Alfke, Engstrom, Kang, Kirkland, Klassen, Lee, Lemay, Maguire, Motorola A925, Nokia 6600, Nokia 7610, Qu, Sony Ericsson P900, Messaging Services APA) anticipates and alternatively renders obvious the Asserted Claims of the ’839 Patent. Alternatively, a POSITA would have been motivated to combine the teachings of each Integrated Interface References with the teachings of any of the Unified Inbox and Outbox References to, e.g., implement a messaging program that advantageously presents a consolidated inbox and outbox for multiple message types. It was well understood that displaying both incoming and outgoing messages exchanged with a single person, or a small group of people, enabled a user to see the various back-and-forth correspondences with ease, and better follow the conversation. Moreover, a POSITA would have found it straightforward and obvious to implement a combined inbox and outbox as part of the display on a mobile device. Applying the Unified Inbox and Outbox references to the Integrated Interface References simply applies the reference’s teachings for their intended purpose to enhance the user interface and improve the ease with which they use their messaging

application to follow back-and-forth conversations—whether those consist of text messages, email messages, multimedia messages, or other types of exchanges. Moreover, a person would have looked to each of the references, including their related and complementary disclosure when implementing the messaging applications on a device. It would have been straightforward for a POSITA to combine these teachings to create a single easy location where a user can easily see all their different types of sent and received correspondences, in a single location.

A POSITA would have expected success in modifying the Unified Inbox and Outbox References or applying the teachings of the Unified Inbox and Outbox References to modify any of the other references as described above. These combinations of prior art references would have involved no more than the predictable use of prior art elements according to their established functions in a known manner, as reflected by, *e.g.*, the teachings cited in Exhibits F0-F10. A POSITA would thus have had a reasonable expectation in success in combining the teachings of these references, yielding the Asserted Claims of the ’839 Patent.

(c) Protocol References

As set forth in Exhibits F0-F10, each of the Protocol References (e.g., 3GPP TS 23.140 v6.4.0, 3GPP TS 24.011 v5.2.0, Becker, Engstrom, ITU-T E.164, Kang, Maguire, Qu, RFC 2045, RFC 2779, RFC 2822, WAP-209-MMSEncapsulation-20020105-a, Messaging Services APA) anticipates and, alternatively, renders obvious the Asserted Claims of the ’631 Patent. Alternatively, a POSITA would have been motivated to combine the teachings of each of the Integrated Interface References and/or the Unified Inbox and Outbox References with the teachings of any of the protocol references. For example, the protocol references provide standardized information about how to package, structure, and transmit messages of different types to be displayed on a device as taught by the Unified Inbox and Outbox References and the Integrated Interface References.

Each of the Protocol References discloses compatible and complementary teachings of different messaging and communications protocols. These protocols provide known methods for allowing a device to communicate messages to and from other devices using different protocols. A POSITA therefore would have been motivated to apply the teachings of each of the Protocol References to one another to advantageously allow a device to communicate using one or more different messaging protocols. Such a combination would be nothing more than the application of known messaging protocols for their intended purposes, and would have been a straightforward combination of known, compatible, and complementary communication protocols that advantageously improve the interoperability and compatibility of devices with different networks.

A POSITA further would have been motivated to combine the teachings of the Protocol References with any of the Integrated Interface and Unified Inbox and Outbox References. The Protocol References provide detailed teachings of well-known messaging and communications protocols to be used by devices. A POSITA would have found it obvious to apply the teachings of the Protocol References to allow the device to send and receive messages structured such that they could be communicated with other devices. These references are complementary and combining their teachings merely yields a device that uses each of the teachings for its intended function—e.g., by implementing an interface presented using the teachings of the Integrated Interface and Unified Inbox and Outbox References to prepare messages formatted using the Protocol References.

A POSITA would have expected success in modifying the Protocol References or applying the teachings of the Protocol References to modify the other references as described above. These combinations of prior art references would have involved no more than the

predictable use of prior art elements according to their established functions in a known manner, as reflected by, *e.g.*, the teachings cited in Exhibits F0-F10. A POSITA would thus have had a reasonable expectation in success in combining the teachings of these references, yielding the Asserted Claims of the ’839 Patent.

(d) Content and Description Data References

As set forth in Exhibits F0-F10, each of the Content and Description Data References (e.g., 3GPP TS 23.140 v6.4.0, 3GPP TS 24.011 v5.2.0, Abu-Hakima, Alfke, Becker, BlackBerry 7230 User Guide, Duske, Engstrom, Gusler, Kang, Kinnunen, Kirkland, Klassen, Lee, Lemay, Maguire, Motorola A925 System, Nielson, Nokia 6600 System, Nokia 7610 System, Ozaki, Qu, RFC 2779, RFC 2822, Salmi, Sony Ericsson P900 System, Varanda, WAP-209-MMSEncapsulation-20020105-a) anticipates and alternatively renders obvious the Asserted Claims of the ’839 Patent. Alternatively, a POSITA would have been motivated to combine the teachings of each Integrated Interface, Unified Inbox and Outbox, and/or Protocol References with the teachings of any of the Content and Description Data References.

For example, a POSITA would have been motivated to combine the each of the Content and Description Data References to allow a device to present to the user both the content of the message itself as well as description data—*e.g.*, the sender, recipient, type of message, timestamp information that provides the user with additional information about the type of communication. It was well understood to a POSITA that different types of messages have different types of capabilities, and when a user is communicating with another person that it is desirable for a user to be able to handle communications with others through multiple concurrent protocols, while being aware of how they are performing such communications. The Content and Description Data References provide compatible and complementary teachings of maintaining, and displaying to a user, metadata about a communication with a user that

advantageously allows the user to be better aware of what communications are taking place, improving the user's understanding of the communications. These teachings merely apply known features of communications—such as providing a user with information about when a communication took place and who sent a message—for their intended purpose, and a POSITA would have found it straightforward and obvious to combine such complementary teachings with one another.

A POSITA would have further found it straightforward and obvious to apply teachings from the Content and Description Data References with the Protocol, Unified Inbox and Outbox, and Integrated Interface References. These references each also teach complementary aspects of a messaging system—including consolidating different messaging protocols, showing sent and received messages, and providing additional information about such messages—that a POSITA would have been motivated to combine for their intended purposes, advantageously improving the ease of use of the system. Combining these teachings would be nothing more than applying each such teaching for its intended purpose.

A POSITA would have expected success in modifying the Content and Description Data References or applying the teachings of the Content and Description Data References to modify the other references as described above. These combinations of prior art references would have involved no more than the predictable use of prior art elements according to their established functions in a known manner, as reflected by, *e.g.*, the teachings cited in Exhibits F0-F10. A POSITA would thus have had a reasonable expectation in success in combining the teachings of these references, yielding the Asserted Claims of the '839 Patent.

(e) Hardware References

A POSITA would have been further motivated to apply the teachings of the Hardware References (*e.g.*, Alfke, Becker, BlackBerry 7230 User Guide, Duske, Engstrom, Gusler, Kang,

Kinnunen, Kirkland, Klassen, Lee, Lemay, Maguire, Motorola A925, Nielson, Nokia 6600, Nokia 7610, Ozaki, Qu, Salmi, Sony Ericsson P900,Varanda, Mobile Device Hardware APA) to one another and/or to the teachings of the Content and Description Data, Protocol, Unified Inbox and Outbox, and Integrated Interface References.

Each of the Hardware References discloses interrelated teachings about the hardware components of devices in a networked messaging system, such as a transceiver, storage, keypad, displayer, and/or controller, that are used to implement a device used for messaging with users with different protocols over a network. As reflected in the Hardware References, hardware design choices were well known for how to implement communication apparatuses used for wireless communications. Based on their similar, interrelated teachings, a POSITA would have been motivated to combine these teachings in order to improve the hardware design and performance of the communication apparatus. A POSITA also would have been motivated to combine these teachings for their additional detail on how to implement the hardware of the device to advantageously implement a device capable of effectively communicating according to its intended purpose. A POSITA would have recognized the benefits of combining the teachings of the Hardware References with one another.

A POSITA would have expected success in modifying the Hardware References or applying the teachings of the Hardware References to modify the other references as described above. These combinations of prior art references would have involved no more than the predictable use of prior art elements according to their established functions in a known manner, as reflected by, *e.g.*, the teachings cited in Exhibits F0-F10. A POSITA would thus have had a reasonable expectation in success in combining the teachings of these references, yielding the Asserted Claims of the ’839 Patent.

7. Identification of Each Item of Prior Art that Anticipates Each Asserted Claim of the ’631 Patent and Each Reference and Combination of References that Renders Obvious the Asserted Claims of the ’631 Patent

The following is an identification of prior art references that, either alone, or in combination with the teachings or knowledge of a person of ordinary skill in the art, the Admitted Prior Art, and/or the additional prior art references discussed below or in Exhibits G0-G14, would have rendered obvious claims 1-4, 8, and 9 of the ’631 Patent, including as indicated in the associated claim charts.

Prior Art Patents – ’631		
Issued Patent/Patent Publication Number	**Country of Origin**	**Date of Issue/Publication**
US2003/0083106 (“Seo”)	US	5/1/2003
US2005/0183017 (“Cain”)	US	8/18/2005
US2006/0005207 (“Louch”)	US	1/5/2006
US2004/0233239 (“Lahdesmaki”)	US	11/25/2004
WO 2000/065429 (“Törnqvist”)	PCT	11/2/2000
US2005/064441 (“Tu”)	US	3/24/2005
US2004/0100479 (“Nakano”)	US	5/27/2004
WO 2005/064441 (“Lee”); and certified English Translation thereof (LGE_0069348 to LGE_0069388, LGE_0059340-LGE_0059379)	PCT	7/14/2005
US2005/0081164 (“Hama”)	US	4/14/2005
US2003/0076306 (“Zadesky ’306”)	US	4/24/2003
US2005/0110768 (“Marriott”)	US	5/26/2005
US2006/0026521 (“Hotelling ’521”)	US	2/2/2006
US2005/0052425 (“Zadesky ’425”)	US	3/10/2005

Prior Art Patents – ’631		
Issued Patent/Patent Publication Number	**Country of Origin**	**Date of Issue/Publication**
US2006/0197750 (“Kerr”)	US	9/7/2006
US2006/0181517 (“Zadesky ’517”)	US	8/17/2006
US6741232 ("Siedlikowski")	US	5/25/2004
US2006/0020904 ("Aaltonen")	US	1/26/2006
US20060197753 (Hotelling '753); U.S. Provisional App. 60/658,777 (“Hotelling Provisional”)	US	9/7/2006
US20050156879 ("Honda")	US	7/21/2005
US20030117440A1 ("Hellyar")	US	6/26/2003
US9785329 ("Paasonen")	US	10/10/2017
US20040051726 ("Martyn")	US	3/18/2004

LG contends that, as set forth below, these references disclose and at least render obvious the Asserted Claims of the ’631 patent. LG further contends that claims that are anticipated by a particular reference are also rendered obvious by that same reference alone, or in combination with the teachings of other references.

Prior Art Anticipating, and/or Rendering Obvious Asserted Claims of the ’631 Patent	
Primary Reference (Anticipation and Obviousness)	**Alternatively, Obviousness in View of, E.g.:**
Aaltonen	APA, Cain, Hama, Hellyar, Honda, Hotelling ’521, Hotelling ’753, Kerr, Lahdesmaki, Lee, Louch, Marriott, Martyn, Nakano, Nokia 3230 System, Nokia 3660 System, Nokia 6620 System, Nokia 7610 System, Nokia N70 System, Paasonen, PlayStation Portable System, Seo, Siedlikowski, Tornqvist, Tu, Zadesky ’306, Zadesky ’425, Zadesky ’517
Hellyar	APA, Aaltonen, Cain, Hama, Honda, Hotelling ’521, Hotelling ’753, Kerr, Lahdesmaki, Lee, Louch, Marriott, Martyn, Nakano, Nokia 3230 System, Nokia 3660 System, Nokia 6620 System, Nokia 7610 System, Nokia N70 System, Paasonen, PlayStation Portable System, Seo,

Prior Art Anticipating, and/or Rendering Obvious Asserted Claims of the ’631 Patent	
Primary Reference (Anticipation and Obviousness)	**Alternatively, Obviousness in View of, E.g.:**
	Siedlikowski, Tornqvist, Tu, Zadesky ’306, Zadesky ’425, Zadesky ’517
Honda	APA, Aaltonen, Cain, Hama, Hellyar, Hotelling ’521, Hotelling ’753, Kerr, Lahdesmaki, Lee, Louch, Marriott, Martyn, Nakano, Nokia 3230 System, Nokia 3660 System, Nokia 6620 System, Nokia 7610 System, Nokia N70 System, Paasonen, PlayStation Portable System, Seo, Siedlikowski, Tornqvist, Tu, Zadesky ’306, Zadesky ’425, Zadesky ’517
Hotelling ’753	APA, Aaltonen, Cain, Hama, Hellyar, Honda, Hotelling ’521, Kerr, Lahdesmaki, Lee, Louch, Marriott, Martyn, Nakano, Nokia 3230 System, Nokia 3660 System, Nokia 6620 System, Nokia 7610 System, Nokia N70 System, Paasonen, PlayStation Portable System, Seo, Siedlikowski, Tornqvist, Tu, Zadesky ’306, Zadesky ’425, Zadesky ’517
Martyn	APA, Aaltonen, Cain, Hama, Hellyar, Honda, Hotelling ’521, Hotelling ’753, Kerr, Lahdesmaki, Lee, Louch, Marriott, Nakano, Nokia 3230 System, Nokia 3660 System, Nokia 6620 System, Nokia 7610 System, Nokia N70 System, Paasonen, PlayStation Portable System, Seo, Siedlikowski, Tornqvist, Tu, Zadesky ’306, Zadesky ’425, Zadesky ’517
Nokia 3230 System	APA, Aaltonen, Cain, Hama, Hellyar, Honda, Hotelling ’521, Hotelling ’753, Kerr, Lahdesmaki, Lee, Louch, Marriott, Martyn, Nakano, Nokia 3660 System, Nokia 6620 System, Nokia 7610 System, Nokia N70 System, Paasonen, PlayStation Portable System, Seo, Siedlikowski, Tornqvist, Tu, Zadesky ’306, Zadesky ’425, Zadesky ’517
Nokia 3660 System	APA, Aaltonen, Cain, Hama, Hellyar, Honda, Hotelling ’521, Hotelling ’753, Kerr, Lahdesmaki, Lee, Louch, Marriott, Martyn, Nakano, Nokia 3230 System, Nokia 6620 System, Nokia 7610 System, Nokia N70 System, Paasonen, PlayStation Portable System, Seo, Siedlikowski, Tornqvist, Tu, Zadesky ’306, Zadesky ’425, Zadesky ’517
Nokia 6620 System	APA, Aaltonen, Cain, Hama, Hellyar, Honda, Hotelling ’521, Hotelling ’753, Kerr, Lahdesmaki, Lee, Louch, Marriott, Martyn, Nakano, Nokia 3230 System, Nokia 3660 System, Nokia 7610 System, Nokia N70 System, Paasonen, PlayStation Portable System, Seo, Siedlikowski, Tornqvist, Tu, Zadesky ’306, Zadesky ’425,

Prior Art Anticipating, and/or Rendering Obvious Asserted Claims of the ’631 Patent	
Primary Reference (Anticipation and Obviousness)	**Alternatively, Obviousness in View of, E.g.:**
	Zadesky ’517
Nokia 7610 System	APA, Aaltonen, Cain, Hama, Hellyar, Honda, Hotelling ’521, Hotelling ’753, Kerr, Lahdesmaki, Lee, Louch, Marriott, Martyn, Nakano, Nokia 3230 System, Nokia 3660 System, Nokia 6620 System, Nokia N70 System, Paasonen, PlayStation Portable System, Seo, Siedlikowski, Tornqvist, Tu, Zadesky ’306, Zadesky ’425, Zadesky ’517
Nokia N70 System	APA, Aaltonen, Cain, Hama, Hellyar, Honda, Hotelling ’521, Hotelling ’753, Kerr, Lahdesmaki, Lee, Louch, Marriott, Martyn, Nakano, Nokia 3230 System, Nokia 3660 System, Nokia 6620 System, Nokia 7610 System, Paasonen, PlayStation Portable System, Seo, Siedlikowski, Tornqvist, Tu, Zadesky ’306, Zadesky ’425, Zadesky ’517
Paasonen	APA, Aaltonen, Cain, Hama, Hellyar, Honda, Hotelling ’521, Hotelling ’753, Kerr, Lahdesmaki, Lee, Louch, Marriott, Martyn, Nakano, Nokia 3230 System, Nokia 3660 System, Nokia 6620 System, Nokia 7610 System, Nokia N70 System, PlayStation Portable System, Seo, Siedlikowski, Tornqvist, Tu, Zadesky ’306, Zadesky ’425, Zadesky ’517
PlayStation Portable System	APA, Aaltonen, Cain, Hama, Hellyar, Honda, Hotelling ’521, Hotelling ’753, Kerr, Lahdesmaki, Lee, Louch, Marriott, Martyn, Nakano, Nokia 3230 System, Nokia 3660 System, Nokia 6620 System, Nokia 7610 System, Nokia N70 System, Paasonen, Seo, Siedlikowski, Tornqvist, Tu, Zadesky ’306, Zadesky ’425, Zadesky ’517
Siedlikowski	APA, Aaltonen, Cain, Hama, Hellyar, Honda, Hotelling ’521, Hotelling ’753, Kerr, Lahdesmaki, Lee, Louch, Marriott, Martyn, Nakano, Nokia 3230 System, Nokia 3660 System, Nokia 6620 System, Nokia 7610 System, Nokia N70 System, Paasonen, PlayStation Portable System, Seo, Tornqvist, Tu, Zadesky ’306, Zadesky ’425, Zadesky ’517

A person of ordinary skill in the art would have been motivated and had a reasonable expectation of success to make these combinations because, for example, each would have been merely: (a) a combination of prior art elements according to known methods to yield predictable

results; (b) a simple substitution of one known element for another to obtain predictable results; (c) a use of a known technique to improve similar devices in the same way; (d) application of a known technique to a known device ready for improvement to yield predictable results; (e) obvious to try; and/or (f) known work in one field of endeavor prompting variations of it for use in either the same field or a different one based on design incentives or other market forces since the variations are predictable to one of ordinary skill in the art.

Additionally, a POSITA, at the time of the Claimed Priority Date, would have been motivated to combine the teachings of these references, *e.g.*, as set forth in Exhibits G0-G14. The ’631 patent states that that the field of the invention “relates to a method for controlling a plurality of work processes in a multitasking mobile terminal.” *E.g.*, ’631 patent 1:23-25. More particularly, the ’631 patent states that it relates to “a method for selecting a second work process during a first work process and controlling a predetermined function of the selected second work process.” *Id.* 1:25-28. Similar to the ’631 patent, all of the cited references relate, directly or indirectly, to controlling a plurality of work processes in a multitasking mobile terminal. *See, e.g.*, Siedlikowski, 2:30-33 (directed to "data processing device 100…which maintains complete synchronization with a user's email, electronic calendar, contacts, tasks and notes (and/or any other type of user information) "); Aaltonen ¶[0015] ("The present invention is directed to a user interface for an electronic device…[to] display… [i]nformation and data related to different categories."); Hotelling '753 ¶[0009] ("Disclosed herein is a multi-functional hand-held device capable of configuring user inputs based on how the device is to be used."); Honda ¶[0017] ("It is yet another object of the present invention to provide a portable communication terminal which enables switching the display of the lists of functions through few operation keys."); Hellyar ¶[0003] ("In general, the present invention relates to…a method and system that allows

users to navigate quickly through multiple applications."); Paasonen, 4:36-41 (describing a "pocket computer being adapted for execution of different software applications, each application having a number of functions"); Martyn ¶[0002] ("This invention relates to a computing device with an improved user interface for applications."); Seo ¶[0001] ("The present invention relates to a user interface of a mobile telecommunication terminal; and, more particularly, to a method for displaying data for multitasking operation in a mobile telecommunication terminal."); Cain ¶[0002] ("[T]his invention relates to improved user interfaces and media player functionality for enhancing user experience."); Louch ¶[0056] (describing user interface "widgets…associated with related, fully functional applications"); Lahdesmaki ¶[0002] ("The invention relates to a method and apparatus for selecting or adjusting services or settings of an electronic device on a display of the electronic device."); Törnqvist 1:4-6, ("The present invention pertains to a method and an arrangement for scrollable cross point navigation in a user interface in order to select a feature"); Tu ¶[0005] ("The present invention includes systems and methods that provide control of multimedia contents displayed in the background when the foreground graphical user interface (GUI) is invoked"); Nakano ¶¶[0001]-[0003] (describing a "portable information terminal" for "execut[ing] a plurality of application software programs"); Lee ¶[0006] ("The present invention is made in view of the above circumstances and is intended to provide a menu display control method for electronic devices and electronic devices that can enhance operability and reduce user burden while making it easy to see the icon when selecting a menu using a menu icon.");Hama ¶[0003] (describing "selection of a desired menu while rotationally displaying menus" on a mobile phone); Zadesky '306, ¶[0017] ("The invention relates, in another embodiment, to a pocket sized handheld computing device…configured to provide one or more control functions."); Marriott ¶¶[0005]-[0007] ("The

present invention relates generally to a media player having …improved touch pads…for performing operations in a consumer electronic device."); Hotelling '521 ¶[0004] (describing " input devices for performing operations in a computer system"); Zadesky '425 ¶[0002] ("[T]he present invention relates to touch pads capable of moving in order to increase the functionality of the touch pad."); Kerr ¶[0024] ("The invention relates, in another embodiment, to a method for operating a handheld device…include[ing] configuring the handheld device based on the user."); Zadesky '517 ¶[0006] ("the present invention relates to an electronic device having a display having both input and output functionality."); the PlayStation System (portable device for operating simultaneous functions); the Nokia 7610 system (mobile terminal device for executing multiple applications); the Nokia 3230 system (same); the Nokia 3660 system (same); the Nokia 6620 system (same); the Nokia N70 system (same). Accordingly, each of these references relate to the same field of endeavor and/or address the same or a similar problem, and a POSITA would have been motivated—and would have found it straightforward and obvious—to combine their teachings, with a reasonable expectation of success, in a matter that meets each element of the Asserted Claims of the ’631 Patent.

(a) User Interface References

As set forth in Exhibits G0-G14, each of the User Interface References (*e.g.*, Aaltonen, Hama, Hellyar, Honda, Hotelling '521, Hotelling '753, Kerr, Lahdesmaki, Lee, Louch, Marriott, Martyn, Nakano, Nokia 3230 System, Nokia 3660 System, Nokia 6620 System, Nokia 7610 System, Nokia N70 System, Paasonen, PlayStation Portable System, Siedlikowski, Tornqvist, Tu, Zadesky '306, Zadesky '425, Zadesky '517) anticipates and, alternatively, renders obvious the Asserted Claims of the ’631 Patent. Alternatively, a POSITA would have been motivated to combine the teachings of any of the User Interface References with the teachings of each of the other User Interface References. For example, each of the User Interface References provides

advantageous techniques for providing a convenient user interface on a mobile device. These interrelated teachings allow users to easily access and manipulate device features—such as switching between applications, navigating menus, and accessing control panels and application functions—within a mobile terminal. For example, the User Interface References disclose interfaces that allow a user to interact with applications through icons on the display of a portable device, including for example a touch screen display, scroll through menu options, and to otherwise provide an engaging user experience within a mobile form-factor. Moreover, these teachings of different user interfaces are complementary and compatible with one another; a POSITA would have found it straightforward and obvious to apply the teachings of each of the User Interface References to the teachings of any of the other User Interface References to advantageously customize the way that users interact with a given device—based both on the expected use of the device and the space available for the user interface of the device.

A POSITA would have expected success in modifying the User Interface References as described above. These combinations of prior art references would have involved no more than the predictable use of prior art elements according to their established functions in a known manner, as reflected by, *e.g.*, the teachings cited in Exhibits G0-G14. A POSITA would thus have had a reasonable expectation in success in combining the teachings of these references, yielding the Asserted Claims of the ’631 Patent.

(b) Sequential Display References

As set forth in Exhibits G0-G14, each of the Sequential Display References (*e.g.*, Hama, Hellyar, Honda, Hotelling '753, Lahdesmaki, Lee, Martyn, Nakano, Nokia 3230 System, Nokia 3660 System, Nokia 6620 System, Nokia 7610 System, Nokia N70 System, Paasonen, PlayStation Portable System, Tornqvist, Tu, Zadesky ’306) anticipates and, alternatively, renders obvious the Asserted Claims of the ’631 Patent. Alternatively, a POSITA would have been

motivated to modify the teachings of each of the User Interface References with the teachings of any of the Sequential Display References, or to modify the teachings of each of the Sequential Display References with the teachings of any of the other Sequential Display References. For example, it was well-understood that displays on mobile devices have limited space to display information to a user; each of the Sequential Display References provide advantageous teachings of navigating through a collection of multiple icons or menu options by viewing them sequentially—whether by use of physical keys, an on-screen display, gesture-based inputs—advantageously allowing a user to more easily browse a significant amount of information including, e.g., by scrolling through different icons representing applications that can be accessed by the user. A POSITA would have found it straightforward and obvious to apply the teachings of each of the Sequential Display References to the teachings of the other Sequential Display References to advantageously customize the way that information is presented, and that navigation is performed, to fit the needs and purposes of a given device. Indeed, the use of such a scrolling or sequential display was a well-understood by a POSITA at the time. Additionally, each of the Sequential Display References' teachings are interrelated, and a POSITA would have been motivated to apply advantageous teachings from other Sequential Display References to further customize the user interface and provide further ways for users to navigate and interact with their device.

Additionally, a POSITA would have been further motivated to combine teachings from the User Interface References with the teachings from each of the Sequential Display References. It was well understood that sequential display was a convenient way to present a large collection of icons or menu options to a user that would not all simultaneously fit onto the display. Applying the Sequential Display References to the User Interface references simply applies the

reference's teachings for their intended purposes to enhance the interface of a device and improve the ease with which the user can navigate through collections of different objects—including icons, applications, folders, menus, and the like. The combination is nothing more than applying the Sequential Display Reference's teachings according to known methods to yield predictable results. Moreover, a POSITA would have looked to each of these references, including their related and complementary disclosure when implementing a user interface on a device. It would have been straightforward for a POSITA to combine these teachings to facilitate a convenient and fluid user interface that could be navigated with ease.

A POSITA would have expected success in modifying the Sequential Display References or applying the teachings of the Sequential Display References to modify the other references as described above. These combinations of prior art references would have involved no more than the predictable use of prior art elements according to their established functions in a known manner, as reflected by, *e.g.*, the teachings cited in Exhibits G0-G14. A POSITA would thus have had a reasonable expectation in success in combining the teachings of these references, yielding the Asserted Claims of the '631 Patent.

(c) Control Menu References

As set forth in Exhibits G0-G14, each of the Control Menu references (*e.g.*, Aaltonen, Cain, Hotelling '521, Kerr, Lahdesmaki, Louch, Martyn, Nokia 3230 System, Nokia 3660 System, Nokia 6620 System, Nokia 7610 System, Nokia N70 System, Paasonen, PlayStation Portable System, Siedlikowski, Zadesky '306, Zadesky '425, Zadesky '517) anticipates and, alternatively, renders obvious the Asserted Claims of the '631 Patent. Alternatively, a POSITA would have been motivated to combine the teachings of each of the User Interface References and/or Sequential Display References with the teachings of any of the Control Menu References,

and/or to further combine the teachings of each of the Control Menu References with the teachings of any of the other Control Menu References.

Each of the Control Menu References discloses interrelated teachings of using a control menu to control certain device and application features in a convenient manner, such as through the use of pop-ups with interactable buttons, widgets that allow a user to change device settings, or control menus that will open and close to provide users with contextually relevant options. Each of these references provide complementary and overlapping teachings of control menu functions, including for example, teaching how control menus might be accessed, the types of device features or applications they can control, and how different menu options may be presented to the user. A POSITA would have found it straightforward and obvious to combine the teachings of the Control Menu References to advantageously implement interactable menus using known and well-understood techniques.

Additionally, a POSITA would have been motivated to combine the teachings of the Control Menu References with the teachings of the User Interface References and/or Sequential Display References. Each of these references provide compatible and interrelated teachings of how to improve the interface of a device. For example, each of the Control Menu References provides discrete, compatible, and complementary teachings of adding within a user interface a control menu that is used to provide certain controls for an application. A POSITA would have been motivated to apply these control menu teachings from the Control Menu References because doing so merely applies these teachings for their intended purpose of improving and simplifying the operability a user interface, and a POSITA would have been directly motivated to apply the advantageous teachings of the Control Menu References when implementing their user interfaces. Applying the Control Menu References to these other User Interface References

and/or Sequential Display References therefore would have been nothing more than a combination of prior art elements according to known methods to yield predictable results.

A POSITA would have expected success in modifying the Control Menu References or applying the teachings of the Control Menu References to modify the other references as described above. These combinations of prior art references would have involved no more than the predictable use of prior art elements according to their established functions in a known manner, as reflected by, *e.g.*, the teachings cited in Exhibits G0-G14. A POSITA would thus have had a reasonable expectation in success in combining the teachings of these references, yielding the Asserted Claims of the ’631 Patent.

(d) Multitasking References

As set forth in Exhibits G0-G14, each of the Multitasking References (*e.g.*, Aaltonen, Cain, Hellyar, Hotelling '753, Louch, Martyn, Nokia 3230 System, Nokia 3660 System, Nokia 6620 System, Nokia 7610 System, Nokia N70 System, Paasonen, PlayStation Portable System, Seo, Mobile Device Multitasking APA) anticipates and, alternatively, renders obvious the Asserted Claims of the ’631 Patent. Alternatively, a POSITA would have been motivated to modify the teachings of each of the User Interface References, Sequential Display References, and/or Control Menu References, with the teachings of any of the Multitasking References. For example, a POSITA would have been motivated to apply the teachings from the Multitasking References of allowing multiple applications to run at the same time—e.g., by allowing a music application to play music while operating another program by performing activities such as viewing images, writing messages, reviewing and updating a calendar, playing games, and so on; or by using multiple applications at the same time such that they can have context-sensitive interactions with one another.

A POSITA would have been motivated to apply the teachings of the Multitasking References to the teachings of the User Interface References, Sequential Display References, and/or Control Menu References, for example, by allowing users to allow certain work processes to run in the background. It was well understood and routine for users to multitask on a device rather than using a device for only a single purpose. It was also well understood that mobile devices were able to operate multiple applications concurrently. Applying the teachings of the Multitasking References therefore was nothing more than a combination of prior art elements according to known techniques to yield predictable results, a use of a known technique to improve similar devices in the same way, and an application of a known technique to a known device yielding predictable results. Applying these teaching further advantageously allow a user to more efficiently navigate and use multiple applications at the same time.

A POSITA would have expected success in modifying the User Interface References, Sequential Display References, and/or Control Menu References, to apply the teachings of the Multitasking References. These combinations of prior art references would have involved no more than the predictable use of prior art elements according to their established functions in a known manner, as reflected by, e.g., the teachings cited in Exhibits G0-G14. A POSITA would thus have had a reasonable expectation in success in combining the teachings of these references, yielding the Asserted Claims of the ’631 Patent.

(e) MP3 Play Process References

As set forth in Exhibits G0-G14, each of the MP3 Play Process References (*e.g.*, Aaltonen, Cain, Hama, Hotelling '753, Lahdesmaki, Louch, Marriott, Nakano, Nokia 3230 System, Nokia 6620 System, Nokia N70 System, Paasonen, PlayStation Portable System, Seo, Tu, Zadesky ’425) anticipates and, alternatively, renders obvious the Asserted Claims of the ’631 Patent. Alternatively, a POSITA would have been motivated to modify the teachings of each of

the User Interface References, Sequential Display References, Control Menu References, and Multitasking References with the teachings of any of the MP3 Play Process References.

Each of the MP3 Play Process References discloses interrelated teachings about music and media players implemented on portable user devices that play MP3 audio files. As reflected in the MP3 Play Process References, it was a well known and desirable feature for mobile devices to allow a user to play music on a device using, e.g., MP3 audio files, and devices providing such a feature were likewise well known. A POSITA would have been motivated to apply the teachings of the MP3 Play Process References to the teachings of the User Interface References, Sequential Display References, Control Menu References and/or Multitasking References in order to advantageously provide this well-understood ability for a user to access and playback MP3 music on the device. Such combinations would merely apply the teachings of each of the MP3 Play Process References for their intended purpose, and be little more than a combination of prior art elements according to known methods to yield predictable results, a use of a known technique to improve similar devices in the same way, and an application of a known technique to a known device yielding predictable results.

A POSITA would have expected success in modifying the User Interface References, Sequential Display References, Control Menu References and/or Multitasking references, to apply the teachings of the MP3 Play Process References. These combinations of prior art references would have involved no more than the predictable use of prior art elements according to their established functions in a known manner, as reflected by, e.g., the teachings cited in Exhibits G0-G14. A POSITA would thus have had a reasonable expectation in success in combining the teachings of these references, yielding the Asserted Claims of the ’631 Patent.

D. Additional Prior Art Offered For Sale and/or Publicly Used or Known or That May Lead to Discovery of Additional Prior Art

LG further contends that the asserted claims are invalid as anticipated and/or obvious in view of public knowledge and uses and/or offers for sale of products and services under 35 U.S.C. §§ 102(a) and/or (b). For example, LG's Invalidity Contentions and accompanying document production reference or describe products and/or systems that were in use, on sale or otherwise publicly available before the alleged priority date of the Asserted Patents. Based on the information presently available, LG identifies the following prior art systems that may anticipate and/or render obvious the asserted claims of the Asserted Patents or lead to the discovery of additional prior art that anticipates or renders obvious the asserted claims of the Asserted Patents:

1. The '924 Patent

LTE technology, and its various designs and implementations, was well-known prior to the priority date of the '924 Patent. For example, Samsung began developing devices capable of providing LTE services in 2009, which provided a foundation for various industry players to build systems around. Generally, the LTE Dongle includes a receiving device that includes an antenna array and a channel information feedback device to communicate with other LTE devices in an LTE network. For example, systems were on the market prior to the priority date of the '924 Patent, including but not limited to the Samsung GT-B3710 LTE Dongle.8 The GT-

[8] Features of the Samsung GT-B3710 LTE Dongle were described in, published, and/or made otherwise publicly available at least through the following sources:
https://phys.org/news/2009-12-samsung-lte-dongle-teliasonera-world.html,
https://sammyhub.com/2009/10/22/samsung-teliasonera-will-become-worlds-first-to-sell-4glte-usb-modems/
http://4gltemall.globalimporter.net/pod2/4363/1474967/samsung-gt-b3710-gt-b3730-gt-b3740-4g-usb-surfstic.htm

B3710 LTE dongle includes an antenna array and a channel information feedback device to communicate with a 4G LTE network.

802.16 WiMax, and its various designs and implementations, was well-known prior to the priority date of the '924 Patent. For example, HTC began developing devices capable of providing 802.16 WiMax services in 2009, which provided a foundation for various industry players to build systems around. Generally, the HTC Evo 4G includes a receiving device that includes an antenna array and a channel information feedback device to communicate with other 802.16 WiMax devices in an 802.16 WiMax network. For example, systems were on the market prior to the priority date of the '924 Patent, including but not limited to the HTC EVO 4G.9

2. The '545 Patent

LTE technology, and its various designs and implementations, was well-known prior to the priority date of the '545 Patent. For example, Samsung developed devices capable of providing LTE services at least as early as 2009, which provided a foundation for various industry players to build systems around.[10] For example, systems were on the market prior to the priority date of the 545 patent ("LTE System Art"), including but not limited to the Samsung GT-B3710 LTE Dongle.[11] The Samsung GT-B3710 LTE Dongle was offered for sale at least in

---

[9] Features of the HTC EVO 4G were described in, published, and/or made otherwise publicly available at least through the following sources:
https://www.engadget.com/2010-05-19-htc-evo-4g-review.html
https://www.intomobile.com/2010/06/01/review-sprint-htc-evo-4g-is-it-as-good-as-it-looks/
https://www.pcmag.com/reviews/htc-evo-4g-sprint
https://arstechnica.com/gadgets/2010/06/hands-on-ars-reviews-the-htc-evo-4g/

[10] *See* https://phys.org/news/2009-12-samsung-lte-dongle-teliasonera-world.html.

[11] Features of the Samsung GT-B3710 LTE Dongle were described in, published, and/or made otherwise publicly available at least through the following sources:
https://phys.org/news/2009-12-samsung-lte-dongle-teliasonera-world.html,
https://sammyhub.com/2009/10/22/samsung-teliasonera-will-become-worlds-first-to-sell-4glte-usb-modems/, and

2009.[12] At the time, the Samsung GT-B3710 LTE Dongle included at least a Kalmia modem chip that supported 2.6GHz band and complied with 3GPP LTE Release 8 (Rel-8).[13] Thus, the Samsung GT-B3710 LTE Dongle includes a transceiver and controller to connect to and communicate with other LTE devices in the LTE network.

3. The '247 Patent

3G technology, and its various designs and implementations, was well-known prior to the priority date of the '247 Patent. For example, Nokia, Motorola, and LG developed devices capable of providing 3G WCDMA services at least as early as 2002-2003, which provided a foundation for various industry players to build systems around. For example, these 3G WCDMA devices were on the market prior to the priority date of the '247 patent ("3G System Art"), including but not limited to:

1. Nokia 6650 mobile phone,[14] which was publicly known as early as 2002.[15] It was Nokia's first 3G phone and supported the 3G WCDMA 2100 MHz band.[16] The Nokia

---

http://4gltemall.globalimporter.net/pod2/4363/1474967/samsung-gt-b3710-gt-b3730-gt-b3740-4g-usb-surfstic.htm. To the extent that the disclosures of the Samsung GT-B3710 LTE Dongle are considered to be separate and discrete references, a POSITA would have been motivated to combine the teachings from these references because contemporaneous public documents, including these disclosures themselves, indicate that these systems and products were intended to be (and were) combined. Defendants' investigation is ongoing and Defendants reserve the right to rely on any additional evidence obtained during the course of the investigation.

[12] *See* https://phys.org/news/2009-12-samsung-lte-dongle-teliasonera-world.html; https://sammyhub.com/2009/10/22/samsung-teliasonera-will-become-worlds-first-to-sell-4glte-usb-modems/.

[13] *See* https://phys.org/news/2009-12-samsung-lte-dongle-teliasonera-world.html.

[14] Features of the Nokia 6650 mobile phone were described in, published, and/or made otherwise publicly available at least through the following sources: https://en.wikipedia.org/wiki/Nokia_6650, https://nokiamuseuminfo.wordpress.com/2003/09/26/nokia-6650/, https://www.manualslib.com/manual/2297649/Nokia-6650.html#manual. To the extent that the disclosures of the Nokia 6650 mobile phone are considered to be separate and discrete references, a POSITA would have been motivated to combine the teachings from these references because contemporaneous public documents, including these disclosures themselves,

6650 mobile phone was capable of providing 3G WCDMA services up to 384 kilobits per son in the downlink and 64 kilobits per second in the uplink.[17] The Nokia 6650 mobile phone included a transceiver and processor that allowed the phone to communicate with other 3G devices in a 3G network.[18]

2. Motorola A920 mobile phone,[19] which was announced as early as August 28, 2003 in Chicago.[20] The Motorola A920 mobile phone was launched by Motorola to support the 3G operator, Three, to provide the "most advanced 3G handset to date."[21] The Motorola A920 mobile phone was designed to allow users to roam on 3G networks worldwide.[22] As such, the Motorola A920 mobile phone included a transceiver and processor that allowed the phone to communicate with other 3G devices in a 3G network.[23]

---

indicate that these systems and products were intended to be (and were) combined. Defendants' investigation is ongoing and Defendants reserve the right to rely on any additional evidence obtained during the course of the investigation.

[15] *See* https://en.wikipedia.org/wiki/Nokia_6650.

[16] *See* https://en.wikipedia.org/wiki/Nokia_6650.

[17] *See* https://nokiamuseuminfo.wordpress.com/2003/09/26/nokia-6650/.

[18] *See e.g.,* https://www.manualslib.com/manual/2297649/Nokia-6650.html#manual.

[19] Features of the Motorola A920 mobile phone were described in, published, and/or made otherwise publicly available at least through the following sources: https://www.mobilephonemuseum.com/phone-detail/a920, https://www.mobilecollectors.net/phone/2900/motorola-a920, https://www.trustedreviews.com/reviews/motorola-a920, http://altehandys.de/downloads/ser-man-mo-a920.pdf. To the extent that the disclosures of the Motorola A920 mobile phone are considered to be separate and discrete references, a POSITA would have been motivated to combine the teachings from these references because contemporaneous public documents, including these disclosures themselves, indicate that these systems and products were intended to be (and were) combined. Defendants' investigation is ongoing and Defendants reserve the right to rely on any additional evidence obtained during the course of the investigation.

[20] *See* https://www.mobilephonemuseum.com/phone-detail/a920, https://www.mobilecollectors.net/phone/2900/motorola-a920,

[21] *See* https://www.mobilephonemuseum.com/phone-detail/a920.

[22] *See* https://www.trustedreviews.com/reviews/motorola-a920

[23] *See e.g.*, http://altehandys.de/downloads/ser-man-mo-a920.pdf.

3. LG K8000 mobile phone,[24] which was commercially available at least as early as January 2003.[25] At the time, the LGE K8000 mobile phone was designed to primarily operate in 3G WCDMA networks.[26] The LGE K8000 mobile phone included a transceiver and 1-core processor that allowed the phone to communicate with other 3G devices in a 3G network.[27]

4. The '809 Patent

As set forth above in Section II.D.3, 3G technology, and its various designs and implementations, was well-known prior to the priority date of the '809 patent. Each of the devices identified in that section therefore also are prior art to the '809 patent. Additionally, each of the devices identified in Section II.D.3 discloses technology similar to the teachings described with respect to at least the Hardware References. Accordingly, a POSITA would have been motivated to combine devices identified in Section II.D.3 with the teachings of the prior art references identified in Section II.C.4, for the same reasons set forth with respect to the Hardware References in Section II.C.4.

---

[24] Features of the LG K8000 mobile phone were described in, published, and/or made otherwise publicly available at least through the following sources: https://www.mobile-review.com/preview/lg-k8000-en.shtml, https://1vs1.digital/phone/lg-k8000/. To the extent that the disclosures of the LG K8000 mobile phone are considered to be separate and discrete references, a POSITA would have been motivated to combine the teachings from these references because contemporaneous public documents, including these disclosures themselves, indicate that these systems and products were intended to be (and were) combined. Defendants' investigation is ongoing and Defendants reserve the right to rely on any additional evidence obtained during the course of the investigation.

[25] *See* https://www.mobile-review.com/preview/lg-k8000-en.shtml.

[26] *See* https://www.mobile-review.com/preview/lg-k8000-en.shtml.

[27] *See e.g.*, https://www.mobile-review.com/preview/lg-k8000-en.shtml, https://1vs1.digital/phone/lg-k8000/.

5. The ’486 Patent

The 3G and 4G systems described herein are also collectively referred to as the ’486 System Art. As discussed above, 3G technology, and its various designs and implementations, was well-known prior to the priority date of the 247 Patent. For example, Nokia began developing devices capable of providing 3G services in 2002, which provided a foundation for various industry players to build systems around. Generally, Nokia’s mobile phones includes a transceiver and a processor to communicate with other 3G devices in a 3G network. For example, systems were on the market prior to the priority date of the ’247 patent, including but not limited to Nokia 6650 System.28 Nokia 6650 System includes a transceiver and a processor to communicate with other 3G devices in a 3G network. *See e.g.,* https://www.manualslib.com/manual/2297649/Nokia-6650.html#manual.

In addition, Motorola began developing devices capable of providing 3G services in 2003, which provided a foundation for various industry players to build systems around. Generally, Motorola’s mobile phones includes a transceiver and processor to communicate with other 3G devices in a 3G network. For example, systems were on the market prior to the priority date of the ’247 patent, including but not limited to Motorola A920 System.29 Motorola A920

---

[28] Features of the Nokia 6650 System were described in, published, and/or made otherwise publicly available at least through the following sources: (1) https://en.wikipedia.org/wiki/Nokia_6650; (2) https://nokiamuseuminfo.wordpress.com/2003/09/26/nokia-6650/; (3) https://www.manualslib.com/manual/2297649/Nokia-6650.html#manual. To the extent that the disclosures of the Nokia 6650 System are considered to be separate and discrete references, a POSITA would have been motivated to combine the teachings from these references because contemporaneous public documents, including these disclosures themselves, indicate that these systems and products were intended to be (and were) combined. Defendants’ investigation is ongoing and Defendants reserve the right to rely on any additional evidence obtained during the course of the investigation.

[29] Features of the Motorola A920 System were described in, published, and/or made otherwise publicly available at least through the following sources: (1)

System includes a transceiver and a processor to communicate with other 3G devices in a 3G network. *See e.g.*, http://altehandys.de/downloads/ser-man-mo-a920.pdf.

To the extent the '486 Patent is not entitled to the priority dates of its provisional applications, and its priority is instead limited to its filing date, LTE devices, as noted above for the '924 Patent would be prior art as of such filing date

Discovery will show that these prior art system anticipate the Asserted Claims and/or render the Asserted Claims obvious alone or in combination with the teachings or knowledge of one of ordinary skill in the art, the Admitted Prior Art, and/or the teachings of the references in Exhibit E0-E6. Upon information and belief, and as will be shown through discovery, the above systems were on sale and/or in public use prior to the claimed priority date of the Asserted Patents.

Discovery will show that these prior art system anticipate the Asserted Claims and/or render the Asserted Claims obvious alone or in combination with the teachings or knowledge of one of ordinary skill in the art, the Admitted Prior Art, and/or the teachings of the references in Sections II.B-E. Upon information and belief, and as will be shown through discovery, the above systems were on sale and/or in public use prior to the claimed priority date of the Asserted Patents.

---

https://www.mobilephonemuseum.com/phone-detail/a920; (2) https://www.mobilecollectors.net/phone/2900/motorola-a920; (3) https://www.trustedreviews.com/reviews/motorola-a920; (4) http://altehandys.de/downloads/ser-man-mo-a920.pdf. To the extent that the disclosures of the Motorola A920 System are considered to be separate and discrete references, a POSITA would have been motivated to combine the teachings from these references because contemporaneous public documents, including these disclosures themselves, indicate that these systems and products were intended to be (and were) combined. Defendants' investigation is ongoing and Defendants reserve the right to rely on any additional evidence obtained during the course of the investigation.

6. The ’839 Patent

As set forth in Exhibits F7, F8, F8, and F10, the Motorola A925 3G Smartphone System, Nokia 6600 Smartphone System, Nokia 7610 Smartphone System, and Sony Ericsson P900 Smartphone System each discloses and at least renders obvious the Asserted Claims. To the extent additional disclosure is required for any of these systems, each of these systems discloses technology similar to the teachings described with respect to the Integrated Interface, Content and Description Data References, Protocol, and Hardware References. Accordingly, a POSITA would have been motivated to combine each of these systems with the teachings of the prior art references identified in Section II.C.6, and the other references identified in Section II.D.6, for the same reasons set forth with respect to the Integrated Interface, Content and Description Data References, Protocol, and Hardware References in Section II.C.6.

7. The ’631 Patent

As set forth in Exhibits G7, G8, G9, G10, G11, and G13, the Nokia 3230 System, Nokia 3660 System, Nokia 6620 System, Nokia 7610 System, Nokia N70 System, and PlayStation Portable System each discloses and at least renders obvious the Asserted Claims. To the extent additional disclosure is required for any of these systems, each of these systems discloses technology similar to the teachings described with respect to the User Interface, Sequential Display, Control Menu, Multitasking, and MP3 Play Process References. Accordingly, a POSITA would have been motivated to combine each of these systems with the teachings of the prior art references identified in Section II.C.7, and the other references identified in Section II.D.7, for the same reasons set forth with respect to the User Interface, Sequential Display, Control Menu, Multitasking, and MP3 Play Process References in Section II.C.7.

E. Invalidity under 35 U.S.C. §§ 102(f)-(g)

Defendants set forth below specific examples of prior invention of which Defendants are currently aware, and which invalidate the Asserted Claims under 35 U.S.C. §§ 102(f) and/or (g). The mapping of the subject matter, or obvious variants thereof, that was invented prior to the priority date of the Asserted Patents is set forth in Exhibits A0-G14 attached hereto.

1. The '924 Patent

Prior to the Asserted Priority Date of the '924 Patent, one or more persons other than the named inventors on the '924 Patent, and not the named inventors of the '924 Patent, developed the subject matter claimed in the '924 Patent. For example, prior to the '924 Patent, individuals at TSG RAN WG1 meeting #61 in Montreal, Canada held May 10-14, 2010 and TSG RAN WG1 meeting #61b in Dresden, Germany held June 28-July 2, 2010, including Krishna Kamal Sayana, and Jeff Xiangyang Zhuang, and/or other attendees who participated in discussions regarding two component precoder feedback, developed the subject matter of each of the Asserted Claims of the '924 Patent, or obvious variants thereof, as reflected in the exhibits and appendices attached here. *See, e.g.*, 3GPP WG#1 Meeting 61 Participants List; R1-103176; R1-103176 ETSI mailing list submission available online at https://list.etsi.org/scripts/wa.exe?A2=ind1005A&L=3GPP_TSG_RAN_WG1&P=R1495395; 3GPP WG#1 Meeting 61b Participants List; R1-103917; R1-103917 ETSI mailing list submission available online at https://list.etsi.org/scripts/wa.exe?A2=ind1006D&L=3GPP_TSG_RAN_WG1&P=R282528; R1-104134; R1-104134 ETSI mailing list submission available online at https://list.etsi.org/scripts/wa.exe?A2=ind1006D&L=3GPP_TSG_RAN_WG1&P=R1847205; Minutes of 3GPP WG#1 Meeting 61.

Likewise, the Asserted Claims of the ’924 Patent are invalid under 35 U.S.C. § 102(f) because the applicants named on the ’924 Patent did not themselves invent the patented subject matter. Instead, the applicants derived the subject matter from various meetings related to the development of the LTE standards, including meetings of the 3GPP, which the applicants attended, and/or through receiving related documentation (including, but not limited to, specifications, meeting minutes, agendas, TDocs, participant lists, and email correspondence), where the concepts embodied in the ’924 Patent were disclosed. *See, e.g.*, 3GPP WG#1 Meeting 61 Participants List; R1-103176; R1-103176 ETSI mailing list submission available online at https://list.etsi.org/scripts/wa.exe?A2=ind1005A&L=3GPP_TSG_RAN_WG1&P=R1495395; 3GPP WG#1 Meeting 61b Participants List; R1-103917; R1-103917 ETSI mailing list submission available online at https://list.etsi.org/scripts/wa.exe?A2=ind1006D&L=3GPP_TSG_RAN_WG1&P=R282528; R1-104134; R1-104134 ETSI mailing list submission available online at https://list.etsi.org/scripts/wa.exe?A2=ind1006D&L=3GPP_TSG_RAN_WG1&P=R1847205; Minutes of 3GPP WG#1 Meeting 61. The named inventor of the ’924 Patent, Kyoungmin Park representing Pantech, attended the relevant meetings. *See, e.g.*, 3GPP WG#1 Meeting 61 Participants List; 3GPP WG#1 Meeting 61b Participants List. Discovery is ongoing and Defendants reserve the right to revise, amend, and/or supplement the information provided herein related to invalidity and derivation under 35 U.S.C. 102(f).

2. The ’545 Patent

Prior to the Asserted Priority Date of the ’545 Patent, individuals at TSG RAN WG2 meeting #68bis in Valencia, Spain held January 18-22, 2010, including Jing He, Woonhee Hwang, Jarkko Kroskela, Henri Koskinen, David Randall, Alexander Sayenko, Benoist Sebire, Manivannan Thyagarajan, Malgorzata Tomala, and Chunli Wu of Nokia; Yuhua Chen, Zhuo

Chen, Jeff Gao, Yi Guo, Gunnar Hedby, Lei Jin, Arnaud Meylan, Derek Richards, Michael Roberts, Xudong Yang, Steven Zeng, and Peng Zhang of Huawei; Takahisa Aoyama, Joachim Löhr, Hidenori Matsuo, and Takeshi Tanaka of Panasonic; Lisa Bostrom, Tao Cui, Henrik Enbuske, Östergaard Jessica, Prabaharan Kanesalingam, Magnus Lindström, Janne Peisa, Håkan Persson, Mai-anh Phan, Jose luis Pradas, Kai-erik Sunell, Martin Van der zee, Henning Wiemann, and Zengjie Zhang of Ericsson; Sungduck Chun, Sung hoon Jung, Sunhee Kim, Ki-dong Lee, Kyungjin Lee, Sungmin Lee, Young Dae Lee, and SeungJune Yi of LG; Zhongda Du, Lei Mao, Sergio Parolari, and Jian Zhang of ZTE; Parag Agashe, Etienne Chaponniere, Aziz Gholmieh, Duncan Ho, Masato Kitazoe, Ozcan Ozturk, Sharad Sambhwani, Damanjit Singh, and Nathan Tenny of Qualcomm; Samian Kaur, Paul Marinier, Diana Pani, Nobuyuki Tamaki, and Stephen Terry of Interdigital, Kenichiro Aoyagi, Wuri Hapsai, Liu Liu, Anil Umesh, Nobukazu Uno, and Akira Yamada of NTT DoCoMo, and/or other attendees who participated in discussions regarding multiple timing advance systems for carrier aggregation, developed the subject matter of each of the Asserted Claims of the ’545 Patent, or obvious variants thereof, as reflected in the exhibits and appendices attached here. *See, e.g.*, 3GPP WG#2 Meeting 68 Participants List; R2-101881, R2-100531, R2-100472, R2-100057, R2-100110, R2-100423, R2-100308, R2-100332, R2-100560, R2-095898.

Likewise, based on an ongoing investigation, Defendants assert that the Asserted Claims of the ’545 Patent are invalid under 35 U.S.C. § 102(f) because the applicants named on the ’545 Patent did not themselves invent the patented subject matter. Instead, the applicants derived the subject matter from various meetings related to the development of the LTE standards, including meetings of the 3GPP, which the applicants attended, and/or through receiving related documentation (including, but not limited to, specifications, meeting minutes, agendas, TDocs,

participant lists, and email correspondence), where the concepts embodied in the ’545 patent were disclosed. *See, e.g.*, 3GPP WG#2 Meeting 68 Participants List; R2-101881, R2-100531, R2-100472, R2-100057, R2-100110, R2-100423, R2-100308, R2-100332, R2-100560, R2-095898. Both named inventors of the ’545 Patent, Kibum Kwon and Myungcheul Jung representing Pantech, attended the relevant meetings. *See, e.g.*, 3GPP WG#2 Meeting 68 Participants List. Discovery is ongoing and Defendants reserve the right to revise, amend, and/or supplement the information provided herein related to invalidity and derivation under 35 U.S.C. 102(f).

3. The ’247 Patent

Prior to the Asserted Priority Date of the ’247 Patent, individuals at TSG RAN WG1 meeting #31 in Tokyo, Japan held February 18-20, 2003, including Arnab Das, Syed Rizwan Hassan Ul, Howard Huang, Jung-Tao Liu, and Said Tatesh of Lucent; and Jean-Aicard Fabien, Amitaba Ghosh, Mark Harrison, Robert Love, and Nick Whinnett of Motorola, and/or other attendees who participated in discussions regarding H-ARQ signalling, developed the subject matter of each of the Asserted Claims of the ’247 Patent, or obvious variants thereof, as reflected in the exhibits and appendices attached here. See, e.g., R1-030614; R1-03-0285; R1-030330; R1-030285.

Likewise, based on an ongoing investigation, Defendants assert that the Asserted Claims of the ’247 Patent are invalid under 35 U.S.C. § 102(f) because the applicants named on the ’247 Patent did not themselves invent the patented subject matter. Instead, the applicants derived the subject matter from various meetings related to the development of the 3G/WCDMA standards, including meetings of the 3GPP, which the applicants attended, and/or through receiving related documentation (including, but not limited to, specifications, meeting minutes, agendas, TDocs,

participant lists, and email correspondence), where the concepts embodied in the '247 patent were disclosed. See, e.g., R1-030614; R1-03-0285[30]; R1-030330; R1-03-0285; R1-030396.

. Upon information and belief, the named inventors of the '247 Patent received information from individuals who attended the relevant meetings. Discovery is ongoing and Defendants reserve the right to revise, amend, and/or supplement the information provided herein related to invalidity and derivation under 35 U.S.C. 102(f).

4. The '809 Patent

One or more persons other than the named inventors on the '809 Patent, and not the named inventors of the '809 Patent, developed the subject matter claimed in the '809 Patent. Individuals at TSG RAN WG2 meeting #60bis in Sevilla, Spain held January 14-18, 2008, including Tao Cui, Sven Ekemark, Henrik Enbuske, Tomas Hedberg, Vera Vukajlovic, Zengjie Zhang, Magnus Lindström, Martin Van der zee, Janne Peisa, Ghyslain Pelletier, Kai-Erik Sunell of Ericsson, and/or other attendees who participated in discussions regarding release of E-DCH resources developed the subject matter of each of the Asserted Claims of the '809 patent, or obvious variants thereof, as reflected in the exhibits and appendices attached here. *See e.g.*, R2-080676; R2-080044.

Likewise, based on an ongoing investigation, Defendants assert that the Asserted Claims of the '809 Patent are invalid under 35 U.S.C. § 102(f) because the applicants named on the '809 Patent did not themselves invent the patented subject matter. Instead, the applicants derived the subject matter from various meetings related to the development of the 3G/WCDMA standards, including meetings of the 3GPP, which the applicants attended, and/or through receiving related documentation (including, but not limited to, specifications, meeting minutes, agendas, TDocs,

[30] *See* https://list.etsi.org/scripts/wa.exe?A2=3GPP_TSG_RAN_WG1;db5ce98d.0302&S=

participant lists, and email correspondence), where the concepts embodied in the ’809 patent were disclosed. *See, e.g.*, Exhibits D-0-D-1; *see also* R2-080676; R2-080044. The named inventor of the ’809 Patent, Paul Marinier representing InterDigital, attended the relevant meetings. *See, e.g.*, R2-080676. Discovery is ongoing and Defendants reserve the right to revise, amend, and/or supplement the information provided herein related to invalidity and derivation under 35 U.S.C. 102(f).

5. The ’486 Patent

Prior to the Asserted Priority Date of the ’486 Patent, one or more persons other than the named inventors on the ’486 Patent, and not the named inventors of the ’486 Patent, developed the subject matter claimed in the ’486 Patent. For example, prior to the ’486 Patent, individuals attending or preparing for TSG RAN WG1 meeting ah-2201 (Ad Hoc on HSDPA) in Sophia Antipolis, France held November 5-7, 2001, including Kenneth Stewart, Amitava Ghosh, Michael E Buckely, Raja S. Bachu, Rapeepat Ratasuk, Stefan Parkvall, and/or other attendees who participated in discussions regarding incremental redundancy, developed the subject matter of each of the Asserted Claims of the ’486 Patent, or obvious variants thereof, as reflected in the exhibits and appendices attached here. See, e.g., 3GPP WG#1 Meeting ah-2201 Participants List; R1-01-1014; R1-01-1014 ETSI 3GPP mailing list circulation available online at https://list.etsi.org/scripts/wa.exe?A2=ind0110&L=3GPP_TSG_RAN_WG1&P=R32441; R1-01-1047; Minutes of 3GPP WG#1 Meeting ah-2201.

Likewise, the Asserted Claims of the ’486 Patent are invalid under 35 U.S.C. § 102(f) because the applicants named on the ’486 Patent did not themselves invent the patented subject matter. Instead, the applicants derived the subject matter from various 3G/WCDMA standards, where the concepts embodied in the ’486 Patent were disclosed. *See, e.g.,* TS 25.212 V5.1.0. For example, during prosecution of foreign counterpart patent EP1573923, the European Patent

Office ("EPO") examiner informed the applicant that substantial portions of the application (e.g., paragraphs [0130]-[0132], Fig. 10) had been copied from 3GPP TS 25.212 V5.1.0 ("TS 25.212"). *See e.g.*, File History of EP1573923, at Sep 12, 2009 Office Action. The table below provides additional examples of text of the '486 Patent that were copied from TS 25.212. Discovery is ongoing and Defendants reserve the right to revise, amend, and/or supplement the information provided herein related to invalidity and derivation under 35 U.S.C. 102(f).

'486 Patent Specification	**EP '923**	**TS 25.212**
Fig. 10	Fig. 10	Fig. 17
16:17-26	[0129]-[0132]	§4.5.4
	[0133]	pp.25-26 No ΔN_{PARITY}, d
16:52-53	[0134]	§4.5.4.1
16:54-17:10	[0135]-[138]	§4.5.4.2
18:15-19:13	[0146]-[0152]	§4.5.4.3

III. MEANS PLUS FUNCTION LIMITATIONS

To the extent any of the following terms may be construed to be subject to 35 U.S.C. § 112(6) and are found to be supported by sufficient corresponding structure, the prior art discloses the purported corresponding structure that Pantech may identify for these claim limitations as set forth in Exhibits C1-C6.

1. '924 Patent:

    1. Claim 23: "a channel information feedback device to transmit, to a transmitting device, information relating to the precoding matrix of the first precoder and information relating to the precoding matrix of the second precoder, the precoding matrix of the first precoder and the precoding matrix of the second precoder being selected, based on the codebook restricting information, from among precoding matrices that are not restricted,")

IV. INVALIDITY UNDER § 112

LG contends that one or more of the Asserted Claims are invalid under 35 U.S.C. § 112 because the claims are indefinite, lack written description, and/or are not enabled. LG's contentions that the following claims (and the claims depending therefrom) are invalid under § 112 are made in the alternative and do not constitute, and should not be interpreted as, admissions regarding the construction or scope of the claims of the Asserted Patents, or that any of the claims of the Asserted Patents are not anticipated or rendered obvious by prior art.

Pantech has not yet provided a claim construction for any of the terms or phrases that Defendants anticipate will be in dispute. Defendants, therefore, cannot provide a complete list of §112 defenses because Defendants do not know whether Pantech will proffer a construction for certain terms and phrases that is broader than, or inconsistent with, the construction that would be supportable by the disclosure set forth in the specification. Defendants offer these contentions without prejudice to any position it may ultimately take as to any claim construction issues and in any potential proceedings before the United States Patent and Trademark Office (USPTO).

The following contentions are subject to revision and amendment pursuant to FRCP 26(e) and the Court's Docket Control Order to the extent appropriate. These contentions are being proffered without expert disclosure or discovery and LG reserves the right to provide expert testimony in support of its contentions at the times prescribed by the Federal Rules of Procedure and the Court's Docket Control Order.

A. Invalidity Under 35 U.S.C. §112, ¶1

35 U.S.C. § 112, ¶ 1 requires that the specification contain a written description of the invention. "[T]he hallmark of written description is disclosure." *Boston Scientific Corp. v. Johnson & Johnson*, 647 F.3d 1353, 1361–62 (Fed. Cir. 2011) (citation omitted). The test for whether a specification adequately describes an invention is "whether the disclosure of the

application relied upon reasonably conveys to those skilled in the art that the inventor had possession of the claimed subject matter as of the filing date . . . . [T]he test requires an objective inquiry into the four corners of the specification from the perspective of a person of ordinary skill in the art .... [It] is a question of fact." *Ariad Pharms., Inc. v. Eli Lilly and Co.*, 598 F.3d 1336, 1351 (Fed. Cir. 2010) (en banc); *Boston Scientific*, 647 F.3d at 1362. "In assessing whether the specification adequately describes the invention, the question is whether "one skilled in the art, reading the original specification, would immediately discern the limitation at issue in the parent" patent." *Waldemar Link, GmbH & Co. v. Osteonics Corp.*, 32 F.3d 556, 558 (Fed. Cir. 1994). " The question is not whether a claimed invention is an obvious variant of that which is disclosed in the specification. Rather, a prior application itself must describe an invention, and do so in sufficient detail that one skilled in the art can clearly conclude that the inventor invented the claimed invention as of the filing date sought." *Lockwood v. Am. Airlines, Inc.*, 107 F.3d 1565, 1571-72 (Fed. Cir.1997). "The knowledge of ordinary artisans may be used to inform what is actually in the specification, see *Lockwood*, 107 F.3d at 1571, but not to teach limitations that are not in the specification, even if those limitations would be rendered obvious by the disclosure in the specification. Id. at 1571-72. *"Rivera v. Int ''l Trade Comm'n*, 857 F.3d 1315, 1322 (Fed. Cir. 2017).

The enablement requirement of Section 112 demands that the patent specification enable "those skilled in the art to make and use the full scope of the claimed invention without 'undue experimentation.'" *Genentech, Inc. v. Novo Nordisk A/S*, 108 F.3d 1361, 1365 (Fed. Cir. 1997) (quoting *In re Wright*, 999 F.2d 1557, 1561 (Fed. Cir. 1993)). "[T]he scope of the claims must be less than or equal to the scope of the enablement." *Nat'l Recovery Tech., Inc. v. Magnetic Separation Sys., Inc.*, 166 F.3d 1190, 1196 (Fed. Cir. 1999).

Defendants contend that the following Asserted Claims are invalid under 35 U.S.C. § 112, ¶ 1. Each Asserted Claim identified below (and each Asserted Claim that depends therefrom) is invalid under ¶ 1 because the specification of the Asserted Patent fails to provide a sufficient written description, enabling disclosure, and/or fails to inform, with reasonable certainty, those skilled in the art about the scope of the invention the meaning of the term(s) and/or phrase(s). For each listed term or phrase, Defendants believe the claim containing the term or phrase is invalid under § 112, ¶ 1, as is any claim depending therefrom or including such terms or phrases, for the same reason(s).

Asserted Patent	Asserted Claim(s)	Terms and/or Phrase(s) Lacking Written Description and Enablement
’924 Patent	25	“the use of precoding matrices for the second precoder that make pairs with restricted precoding matrices of the second matrix group is restricted based on the second bit sequence”
’545 Patent	2, 3	“UL timing group information set”
		“configuring one or more UL timing groups based on the UL timing group information set”
		“each of the one or more UL CCs transmitting an RAP being set as a delegate CC in the respective UL timing group”
’247 Patent	1, 2, 8, 11, 12, 18	“determining, by the WTRU, whether to retransmit the data block based on the received uplink scheduling information and not based on whether the WTRU has received a negative acknowledgement (NACK) from the base station”
	2, 12	“in response to a determination to retransmit the data block, retransmit the data block”
	2, 12	“the scheduling information indicates a modulation and coding scheme”
’809 Patent	1	“determining if a hybrid automatic repeat request (HARQ) buffer is empty”

	9	"determines if the HARQ buffer is empty"
	1, 9	"[releasing]/[releases] the E-DCH resource"
'839 Patent	1	"a controller for providing the IUI to the keypad and the displayer by operating the integrated messaging service program"
	1	"dividing the received message into a message content and description data"
	2	"wherein the description data include incoming/outgoing description data in order to present whether the message is transmitted or received"
'631 Patent	1, 2	"predetermined function of [a second]/[the first] work process"
	1, 8	"sequential display of icons"
	1	"designated portion of a display"
	9	"designated portion"

B. Invalidity Under 35 U.S.C. § 112, ¶ 2

Claims are indefinite under 35 U.S.C. § 112, ¶ 2 when they "fail to inform, with reasonable certainty, those skilled in the art about the scope of the invention." *Nautilus, Inc. v. Biosig Instruments, Inc.*, 34 S. Ct. 2120, 2124 (2014). To the extent an asserted apparatus claim includes both apparatus and method limitations, that claim is invalid for indefiniteness under § 112, ¶ 2 because it fails to identify or notify the public of what constitutes direct infringement. *See IPXL Holdings, L.L.C. v. Amazon.com, Inc.*, 430 F.3d 1377 (Fed. Cir. 2005).

In addition to Defendants' reservation of rights stated above, Defendants will present arguments as to indefiniteness will be presented at that time, *i.e.*, through the *Markman* meet and confer and briefing process.

Defendants contend that the following Asserted Claims are invalid under 35 U.S.C. § 112,

¶ 2. Each Asserted Claim identified below (and each Asserted Claim that depends therefrom) is invalid under ¶ 2 because they fail to inform, with reasonable certainty, those skilled in the art about the scope of the claimed invention. For each listed term or phrase, Defendants believe the term or phrase (as well as terms within any such phrase) is invalid under § 112, ¶ 2, and any limitation including such term or phrase is also indefinite.

Asserted Patent	Asserted Claim(s)	Indefinite Term(s) and/or Phrase(s)
'924 Patent	17, 23	"wherein a period of transmitting the information relating to the precoding matrix of the first precoder and a period of transmitting the information relating to the precoding matrix of the second precoder are different from each other"
	23	"a channel information feedback device to transmit, to a transmitting device, information relating to the precoding matrix of the first precoder and information relating to the precoding matrix of the second precoder, the precoding matrix of the first precoder and the precoding matrix of the second precoder being selected, based on the codebook restricting information, from among precoding matrices that are not restricted,"
	25	"the use of precoding matrices for the second precoder that make pairs with restricted precoding matrices of the second matrix group is restricted based on the second bit sequence"
'247 Patent	1, 2, 8, 11, 12, 18	"determining, by the WTRU, whether to retransmit the data block based on the received uplink scheduling information and not based on whether the

		WTRU has received a negative acknowledgement (NACK) from the base station"
'809 Patent	1	"A wireless transmit/receive unit (WTRU) capable of communicating with a base station using an enhanced dedicated channel (E-DCH) resource while in a cell forward access channel (CELL_FACH) state, the WTRU comprising: … a processor; wherein the processor: determines if the E-DCH buffer is empty; causes the transmitter to transmit to the base station scheduling information (SI), wherein the SI includes a total E-DCH buffer status (TEBS) equal to zero for the E-DCH buffer when the processor has determined that the E-DCH buffer is empty; determines if the HARQ buffer is empty; and releases the E-DCH resource when the transmission of the SI with the TEBS equal to zero has been made and the HARQ buffer is empty."
'839 Patent	1	"controlling elements in the wireless communication terminal"
	2	"wherein the description data include incoming/outgoing description data in order to present whether the message is transmitted or received"
'631 Patent	1, 8	"sequential display of icons"
	1	"designated portion of a display"
	9	"designated portion"

V. INVALIDITY UNDER § 101

LG contends that the Asserted Claims are invalid under 35 U.S.C. § 101 because the claims are not directed to patentable subject matter. The Supreme Court has articulated a two-step process to determine whether claims of a patent are directed towards "[l]aws of nature, natural phenomena, and abstract ideas," all ineligible subject matter under 35 U.S.C. § 101. *Alice Cop. Pty. Ltd. v. CLS Bank Int'l*, 573 U.S. 208, 217 (2014). First, the court must determine whether the claims are directed towards to a patent-ineligible concept. *Id.* at 217-18. Second, if the court determines that the claims are drawn to an abstract idea or other ineligible concept, the court must then determine whether the remainder of the claims contains an inventive concept sufficient to transform the claimed abstract idea into a patent-eligible invention. *Id.* at 221-22.

Under *Alice* step one, the Asserted Claims are directed to patent-ineligible abstract ideas. For example, as explained in greater detail below, the Asserted Claims of the Asserted Patents are directed to abstract ideas relating to communicating information in a wireless network. *See, e.g.*, *Chamberlain Group, Inc. v. Techtronic Industries Co.*, 935 F.3d 1341, 1348 (Fed. Cir. 2019) (holding the claims were directed to the abstract idea of "wirelessly communicating status information about a system"). Under *Alice* step two, when the abstract idea is removed from the Asserted Claims, what remains of the Asserted Claims does not supply an inventive concept. For example, as explained in greater detail below, each of the Asserted Claims recites only generic networking and computer components on which to implement the abstract idea, and does not recite any purportedly novel arrangement of such components.

A. The '247 Patent

Under *Alice* step one, the asserted claims are directed to patent-ineligible subject matter—namely, the abstract idea of communicating based on a schedule. For example, the

asserted ’247 claims generally recite the steps of transmitting a data block to a base station and using scheduling information to determine whether to retransmit the data block.

Under *Alice* step two, removing this abstract idea, there is nothing inventive recited in the remainder of the asserted ’247 claims. The asserted ’247 claims merely recite conventional hardware components (e.g., transceiver, processor, base station) performing their conventional functions in a conventional manner (e.g., transmitting, receiving, and processing data), and does not otherwise recite a novel arrangement of components that would render the abstract idea patentable.

B. The ’809 Patent

At Step One, the Asserted Claims of the ’809 Patent recites determining when buffers are empty, transmitting that status information, and then releasing resources. They are directed to patent ineligible abstract ideas relating to, e.g., monitoring and transmitting information, and releasing resources in response. As the ’809 Patent concedes, all of the underlying technology behind the purported invention—including the allocation of common resources in an “enhanced” E_RACH message phase, the use of “E-DCH in a CELL_FACH state to increase the data rate of [a] shared channel,” and the requisite communications protocols—were already known. ’809 Patent 2:1-17; *see also* Section II.B (summarizing the Admitted Prior Art). Indeed, the ’809 Patent admits that the only purported innovation was how to “terminate an E-RACH message phase” because that was not yet codified “in the current standard.” ’809 Patent 2:13-17. In other words, the alleged invention was merely determining when a release of resources takes place, similar to concepts that this court has already found patent ineligible. *See, e.g.*, *P&RO Sols. Grp., Inc. v. CIM Maint., Inc.,* 273 F. Supp. 3d 699 (E.D. Tex. 2017) (Schroeder, J.) (finding abstract claims directed to “scheduling business activities using a computer and computer network,” including dependent claims directed to “tracking resources.”); *Intell. Ventures II LLC v. Sprint*

Spectrum, L.P., No. 2:17-CV-00661, 2018 WL 6804804, at *4 (E.D. Tex. Sept. 24, 2018) (Gilstrap, J.) (finding claims in telecommunications patents abstract despite purportedly addressing problems arising from "limited . . . capacity associated with a fixed allocation of resource").

Independent claim 1 is representative of all the Asserted Claims of the '809 Patent. To the extent that the claims specify "releasing the E-DCH resource when the transmission of the SI with the TEBS equal to zero has been made and the HARQ buffer is empty," this is insufficient to render the claims non-abstract. Specifying that the release occurs when a particular transmission has been made and a buffer is empty merely limits the abstract concept to a particular technology area and repackages the abstract idea by articulating it at a lower level of abstraction. *See Apple, Inc. v. Ameranth, Inc.*, 842 F.3d 1229, 1240 (Fed. Cir. 2016) ("An abstract idea can generally be described at different levels of abstraction.").

At Step Two, to the extent that the Asserted Claims of the '809 Patent recite additional limitations beyond the abstract idea—such as the use of a wireless transmit/receive unit (WTRU), a base station, a transmitter, a timer, a processor—these are generic and conventional components performing their routine functions. The '809 Patent does not recite any novel arrangement of those components, nor does it purport to. *See* '809 Patent 2:13-17; Section II.B. At most, these are the well-known and conventional computer components performing their routine functions.

To the extent that dependent claims 2-4 recite additional limitations that narrow the scope of claim 1, they do not themselves recite an independent concept or otherwise render the claimed subject matter patent eligible. All these dependent claims merely recite additional functional steps, or otherwise add routine and well-known features incapable of rendering the claimed

subject matter patent eligible. For example, dependent claim 2 recites "starting an inactivity timer when the E-DCH buffer is empty," and dependent claim 3 recites "triggering the transmission of the SI when the inactivity timer expires." The added use of an inactivity timer before making a transmission is itself abstract, and incapable of directing the claim to patent eligible subject matter. Moreover, the added limitations are themselves well-understood, routine, and conventional, and are incapable of supplying an inventive concept in any case.

Claim 4 recites "transmitting using the E-DCH resource when a response is received on an E-DCH acquisition indication channel (E-AICH) to a preamble transmitted by the WTRU." These limitations are directed to the abstract idea of allocating network resources, and are well-understood, routine, and conventional in any case. In fact, the '809 patent concedes that it was known both to request E-DCH resources using a "preamble" transmitted by the WTRU, and to wait for a response before using the resources to transmit. *See*, '809 Patent Fig. 1, 2:1-12 (describing the process for "enhanced RACH (E-RACH) access"); *see also id.* at 3:15-17 (noting that "[t]he term E-RACH may also indicate the use of the E-DCH in CELL_FACH."). As for claim 5, it recites "completing an E-DCH transmission when a cell reselection or a radio link failure occurs." This too is well-understood, routine, and conventional device behavior that is incapable of supplying an inventive concept or otherwise rendering the claims non-abstract.

As for remaining Asserted Claims, claims 6-10 are system counterparts of method claims 1-5. They are directed to nearly identical subject matter, and to the extent that there are any differences between the claims, it is the recitation of generic known hardware components such as an E-DCH buffer, HARQ buffer, transmitter, and processor. These added hardware limitations are all well-known components being used for conventional and routine purposes. The added

limitations in claims 6-10 do not render them any less abstract than claims 1-5, nor do they nor do they recite anything inventive.

The lack of patent eligible subject matter is further confirmed by Exhibits F1-F5 and in Section II.B summarizing the Admitted Prior Art, demonstrating that each the Asserted Claims recites nothing more than well-known and conventional computer components performing their routine functions.

C. The '839 Patent

The Asserted Claims of the '839 Patent are ineligible for patenting for the reasons described in Defendants' briefing on the Partial Motion to Dismiss (Dkt. 18), which is hereby incorporated by reference in full into these Contentions as if set forth in full herein. Defendants further incorporate by reference the Reply in support of Defendants' Partial Motion to Dismiss (Dkt. 59), as if set forth in full herein as well as any oral argument in support of that motion.

As established in Defendants' Partial Motion to Dismiss, claim 1 of the '839 Patent is representative of all the Asserted Claims of the '839 Patent. *See* Defendants' Partial Motion to Dismiss §II.A. The Asserted Claims are directed to the abstract idea of using a single "integrated" interface for text and multimedia messages, fail to address a technical problem, and closely resemble other claims that have been found abstract and patent ineligible by the Federal Circuit. *See* Defendants' Partial Motion to Dismiss § IV.A. Moreover, any additional limitations beyond the abstract idea—such as the use of particular hardware to perform routine functions—are conventional and known features that fail to recite an inventive concept. *See* Defendants' Partial Motion to Dismiss § IV.B.

Nor do the added limitations of claim 2 recite an inventive concept or otherwise render the claimed subject matter patent eligible. The added limitations of claim 2 specify that "description data include incoming/outgoing description data in order to present whether the

message is transmitted or received." Merely specifying the contents of "description data" and using it to "present" messages in a particular manner is itself an abstract concept for similar reasons as claim 1, and is incapable of rendering the claims as a whole patent eligible. *See e.g.*, *Trading Techs. Int'l, Inc. v. IBG LLC*, 921 F.3d 1084, 1093 (Fed. Cir. 2019) (finding ineligible a "purportedly new arrangement of generic information that assists [users] in processing information more quickly"); *Interval Licensing*, 896 F.3d at 1345 ("the collection, organization, and display of two sets of information on a generic display device is abstract"); *Int'l Bus. Machs. Corp. v. Zillow Grp., Inc.* ("*IBM*"), 50 F.4th 1371, 1380 (Fed. Cir. 2022) (finding ineligible claims that "merely organize and arrange sets of visual information into layers and then present said layers on a generic display device"); *see also* Defendants' Partial Motion to Dismiss § IV.A. Moreover, claim 2 fails to address a technical problem, recite an inventive concept, or otherwise require the use of anything other than known devices operating in a conventional manner. As noted in Defendants' Partial Motion to Dismiss § IV.B, the '839 Patent concedes that conventional devices could receive and display a variety of messages, (*see* '839 Patent 1:32-35) and that the alleged invention can be carried out "without changing a transmission protocol or network" for those messages, ('839 Patent, 1:8-16).

The lack of patent eligible subject matter is further confirmed by Exhibits F1-F5 and in Section II.B summarizing the Admitted Prior Art, demonstrating that each the Asserted Claims recites nothing more than well-known and conventional computer components performing their routine functions.

D. The '631 Patent

The Asserted Claims of the '631 patent are ineligible for patenting for the reasons described in Defendants' briefing on the Partial Motion to Dismiss (Dkt. 18), which is hereby incorporated by reference in full into these Contentions as if set forth in full herein. Defendants

further incorporate by reference the Reply in support of Defendants' Partial Motion to Dismiss (Dkt. 59), as if set forth in full herein as well as any oral argument in support of that motion.

As established in Defendants' Partial Motion to Dismiss, claim 1 of the '631 Patent is representative of all the Asserted Claims of the '839 Patent. *See* Defendants' Partial Motion to Dismiss §II.B. The Asserted Claims are directed to the abstract idea of controlling two work processes in a computer terminal ("multitasking") using graphical icons to switch between processes, fail to address a technical problem, and closely resemble other claims that have been found abstract and patent ineligible by this Court. *See* Defendants' Partial Motion to Dismiss § V.A. The various claims limitations directed to selecting and displaying icons, executing different "work processes," activating control menus, and/or controlling "predetermined function" of a program are conventional activities described using wholly functional language, incapable of rendering the claim patent eligible. *See e.g.*, *Uniloc USA, Inc. v. ADP, LLC* ("*ADP*"), 772 F. App'x 890, 900 (Fed. Cir. 2019)) (finding abstract a claim that is "wholly functional and does not include the 'specificity required to transform a claim from one claiming only a result to one claiming a way of achieving it.'"). At best, by cloaking the abstract idea in functional language of receiving a first/second/third/fourth/fifth "command," displaying "screens," controlling "predetermined functions," the Asserted Claims are merely directed to the same underlying abstract idea at a lower level of abstraction. *See Apple, Inc. v. Ameranth, Inc.*, 842 F.3d 1229, 1240 (Fed. Cir. 2016) ("An abstract idea can generally be described at different levels of abstraction."). Moreover, any additional limitations beyond the abstract idea—such as the use of particular hardware—are conventional and known features that fail to recite an inventive concept. *See* Defendants' Partial Motion to Dismiss § V.B.

Nor do claims 2-4 and 8-9 recite an independent concept or otherwise render the claimed subject matter patent eligible. All of these dependent claims recite merely additional functional steps, non-technical subject matter, or otherwise routine and well-known features incapable of rendering the claimed subject matter patent eligible.

For example, Claim 2 recites "generating a control signal for controlling the predetermined function of the first work process in response to the fourth command" and "controlling the predetermined function" in response. At the outset, those are simply additional functional steps that provide no technical benefit, are themselves directed to the abstract idea of controlling work processes, and do not address the underlying deficiencies in claim 1 that render it patent ineligible. Moreover, the added limitations of claim 2 are themselves well-understood, routine, and conventional, and are incapable of supplying an inventive concept in any case.

Similarly, claim 3 recites "deactivating the activated control menu" in response to a "command." As before, the added limitations of claim 3 are functional steps that provide no technical benefit, are themselves directed to the abstract concept of merely "deactivating" an activated menu, and do not address or overcome the deficiencies in claim 1. As before, the added limitations of claim 3 are themselves well-understood, routine, and conventional, and are incapable of supplying an inventive concept in any case.

Claim 4 recites that "the first work process is an MP3 play process." The added limitations of claim 4 merely restrict the abstract idea articulated in claim 1 to a particular technological environment, specifically, one where the first work process is an MP3 play process. Restricting one of the work processes in this way provides no technical benefit, and does nothing to address the underlying deficiencies in claim 1. Moreover, it was well known at the time of the purported invention to include MP3 player functionality into mobile devices, and

an MP3 player functionality itself was well-understood, routine, and conventional, incapable of supplying an inventive concept.

Claim 8 recites "performing sequential display of icons such that a displayed icon disappears from a screen of the mobile terminal and an icon appears on the screen of the mobile terminal" in response to a repetition of a command. The added limitations of claim 8 are further functional steps that provide no technical benefit, are themselves directed to the abstract concept of displaying different icons on a screen at different times, and do not address the deficiencies in claim 1. As previously noted in Defendants' Partial Motion to Dismiss, this Court has found ineligible claims directed to using icons to execute and display programs, and the Federal Circuit affirmed. *See e.g.*, *Uniloc USA, Inc. v. AVG Techs. USA, Inc.* ("*Avg Techs.*"), No. 2:16-cv-00393, 2017 U.S. Dist. LEXIS 45125, at *18-19 (E.D. Tex. Mar. 28, 2017) (dismissing claims under 12(b)(6)) (affirmed in-relevant-part by *Uniloc USA, Inc. v. ADP, LLC* ("*ADP*"), 772 F. App'x 890, 900 (Fed. Cir. 2019)). Displaying different icons at different times is non-inventive, and unable to render the claims patent eligible. *See e.g.*, *IBM*, 50 F.4th at 1377 ("improving a user's experience while using a computer application is not, without more, sufficient to render the claims patent-eligible at step one"). Moreover, the added limitations of claim 8 are themselves well-understood, routine, and conventional, and are incapable of supplying an inventive concept in any case.

Similarly, claim 9 recites that "an icon to be displayed in the designated portion is replaced with an icon that is different from the icon corresponding to the second work process" in response to a first command. The added limitations of claim 9 provide no technical benefit, are themselves directed to the abstract concept of displaying different icons on a screen at different times, and do not address the deficiencies in claim 1. Requiring that an additional "icon that is

different from the icon corresponding to the second work process" be displayed in a designated region does not render the claims any less abstract. *See, e.g.*, *Avg Techs.*, 2017 U.S. Dist. LEXIS 45125 at *18-19. Moreover, the added limitations of claim 9 are themselves well-understood, routine, and conventional, and are incapable of supplying an inventive concept in any case.

The lack of patent eligible subject matter is further confirmed by Exhibits F1-F10 and in Section II.B summarizing the Admitted Prior Art, demonstrating that each the Asserted Claims recites nothing more than well-known and conventional computer components performing their routine functions.

Dated: April 12, 2023

Respectfully submitted,

/s/ Daniel W. Richards

Jennifer H. Doan
Texas Bar No. 08809050
Kyle R. Akin
Texas Bar No. 24105422
HALTOM & DOAN
6500 Summerhill Road, Suite 100
Texarkana, TX 75503
Telephone: (903) 255-1000
Facsimile: (903) 255-0800
Email: jdoan@haltomdoan.com
Email: kakin@haltomdoan.com

James R. Batchelder
(CA Bar No. 136347)
(Eastern District of Texas Member)
David S. Chun
(CA Bar No. 315958)
(Eastern District of Texas Member)
James L. Davis, Jr.
(CA Bar No. 304830)
(Eastern District of Texas Member)
Daniel W. Richards
(CA Bar No. 280595)
(Eastern District of Texas Member)
ROPES & GRAY LLP

1900 University Avenue 6th Floor
East Palo Alto, CA 94303
Telephone: (650) 617-4000
Facsimile: (650) 617-4090
Email: James.Batchelder@ropesgray.com
Email: David.Chun@ropesgray.com
Email: James.L.Davis@ropesgray.com
Email: Daniel.Richards@ropesgray.com

Matthew R. Shapiro
(NY Bar No. 5102017)
(Eastern District of Texas Member)
ROPES & GRAY LLP
1211 Avenue of the Americas
New York, NY 10036
Telephone: (212) 596-9000
Facsimile: (212) 596-9090
Email: Matthew.Shapiro@ropesgray.com
ATTORNEYS FOR DEFENDANTS
LG ELECTRONICS INC.
AND LG ELECTRONICS U.S.A., INC.

CERTIFICATE OF SERVICE

I hereby certify that on April 12, 2023, I caused a copy of Defendants' Invalidity Contentions to be served on counsel of record.

/s/ Saron Harry
Saron Harry