US005809428A

United States Patent [19]

Garahi et al.

[11] Patent Number: 5,809,428

[45] Date of Patent: Sep. 15, 1998

[54] **METHOD AND DEVICE FOR PROCESSING UNDELIVERED DATA MESSAGES IN A TWO-WAY WIRELESS COMMUNICATIONS SYSTEM**

[75] Inventors: **Masood Garahi**, Madison; **William D. Hays**, Jackson; **John J. Hale**; **Gregory J. Pinter**, both of Brandon, all of Miss.

[73] Assignee: **Mobile Telecommunication Technology**, Jackson, Miss.

[21] Appl. No.: **687,034**

[22] Filed: **Jul. 25, 1996**

[51] **Int. Cl.**[6] **H04B 7/00**

[52] **U.S. Cl.** **455/517**; 455/412; 455/67.1; 455/522; 340/825.44

[58] **Field of Search** 455/517, 507, 455/508, 422, 412, 413, 435, 522, 67.1; 340/825.44, 311.1

[56] **References Cited**

U.S. PATENT DOCUMENTS

5,590,403 12/1996 Cameron et al. 455/51.2

Primary Examiner—Donnie L. Crosland

Attorney, Agent, or Firm—Finnegan, Henderson, Farabow, Garrett & Dunner, L.L.P.

[57] **ABSTRACT**

A network operations center transmits a data message to a wireless mobile unit and waits for a data acknowledgment message. If no acknowledgment is received within a specified time, the network operations center sends a probe message to attempt to locate the mobile unit and waits for a probe acknowledgment message. If still no acknowledgment, the network operations center marks the data message as undelivered and stores it for future delivery. If a mobile unit receives a probe message while its transmitter is powered off, it displays an indication to the subscriber that there is a message waiting to be delivered. The subscriber can then dial into the network operations center to retrieve the message. Or, when the transmitter of the mobile unit is powered back on, the mobile unit sends a registration message to the network operations center; and upon receiving the registration message, the network operations center automatically re-transmits the undelivered data message to the mobile unit.

10 Claims, 9 Drawing Sheets

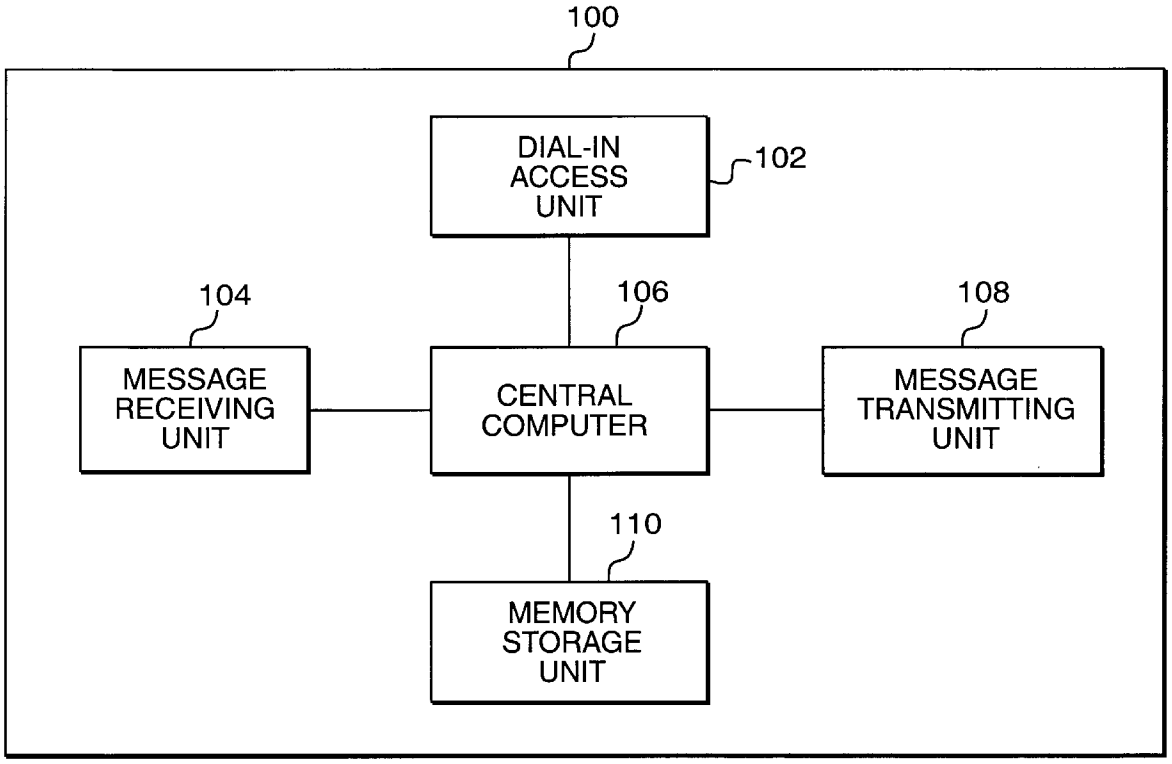

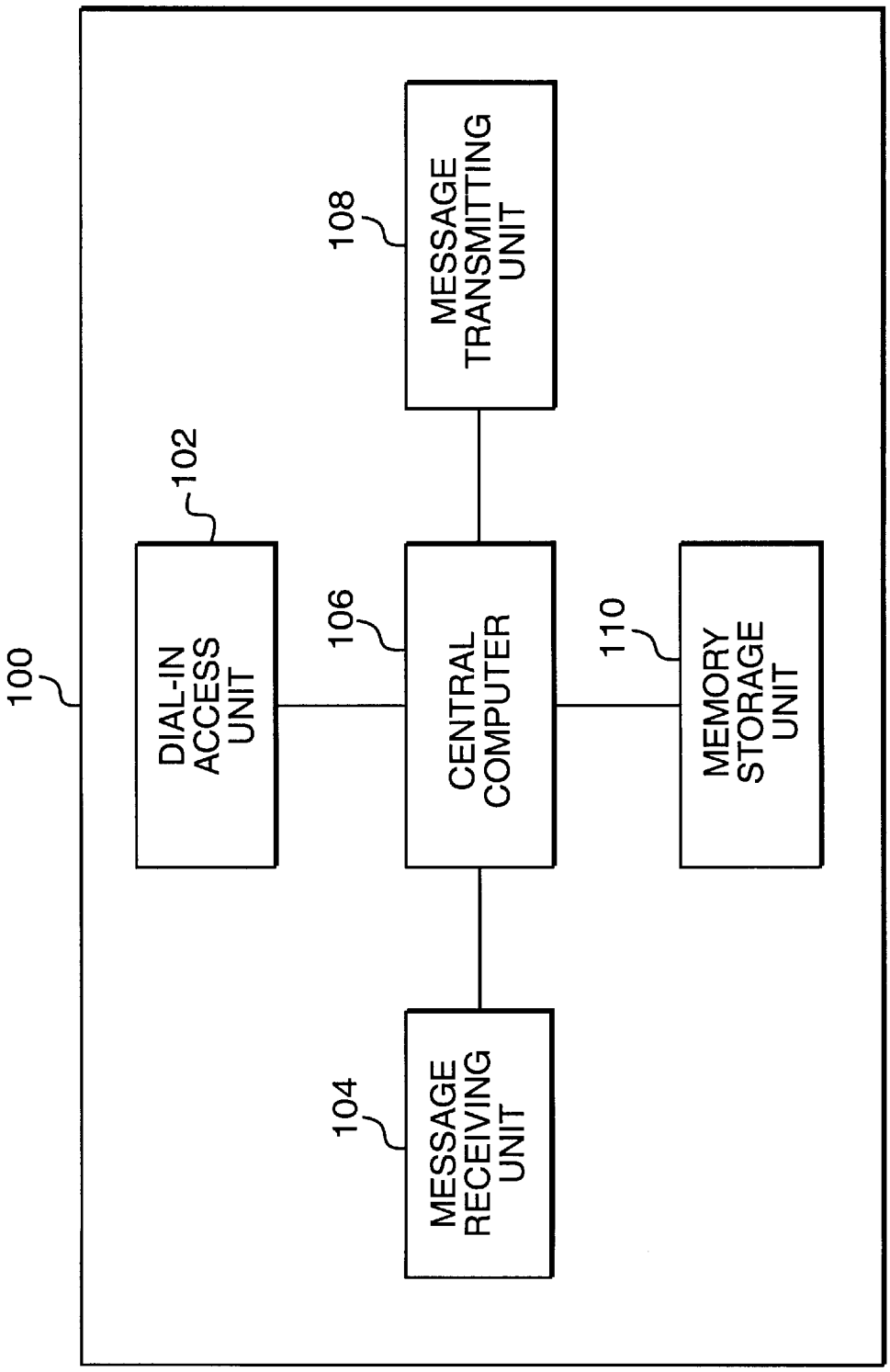
100
DIAL-IN ACCESS UNIT
102
CENTRAL COMPUTER
106
MESSAGE RECEIVING UNIT
104
MESSAGE TRANSMITTING UNIT
108
MEMORY STORAGE UNIT
110

FIG.1

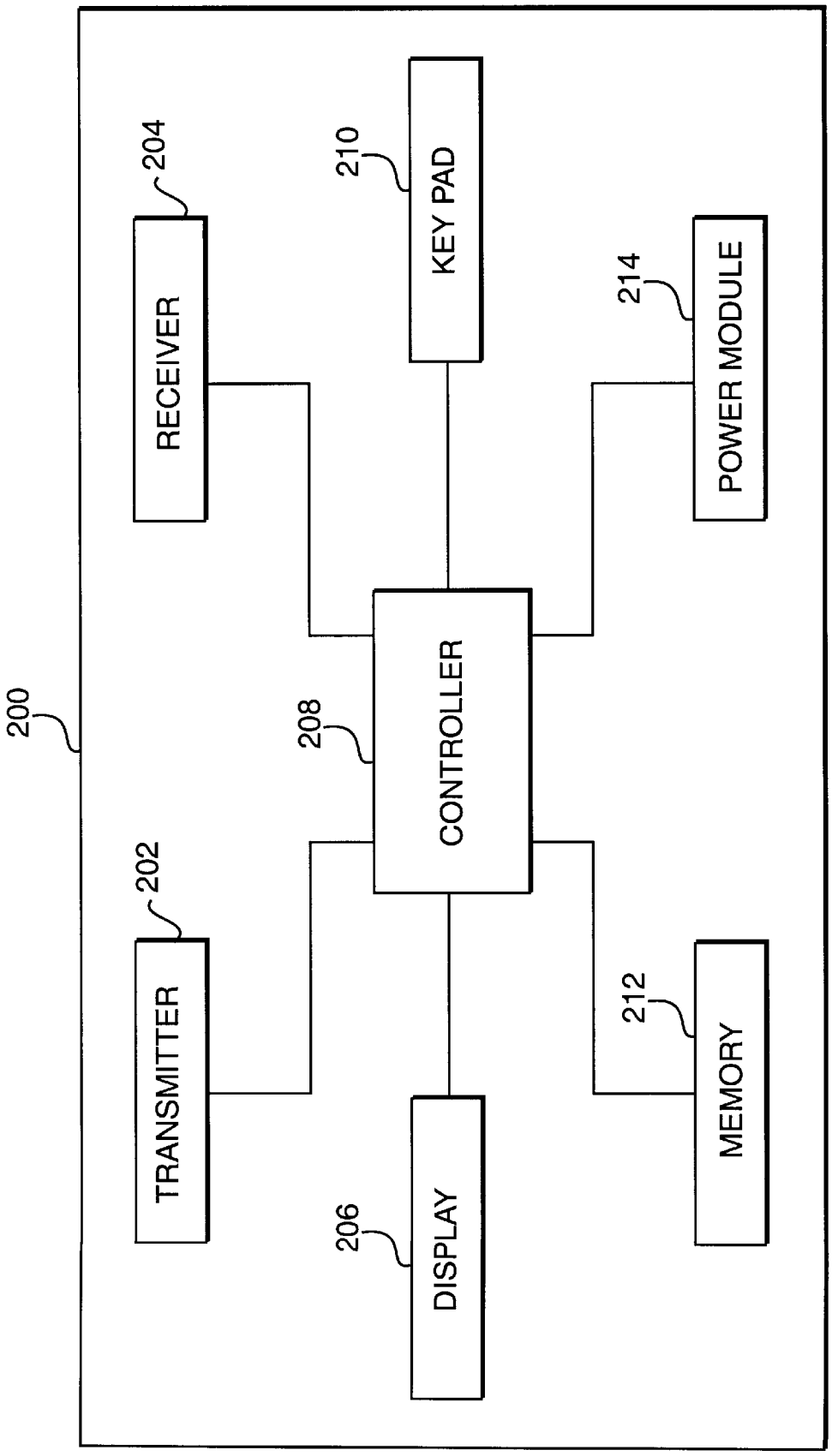
200
RECEIVER
204
TRANSMITTER
202
KEY PAD
210
CONTROLLER
208
DISPLAY
206
POWER MODULE
214
MEMORY
212

FIG.2

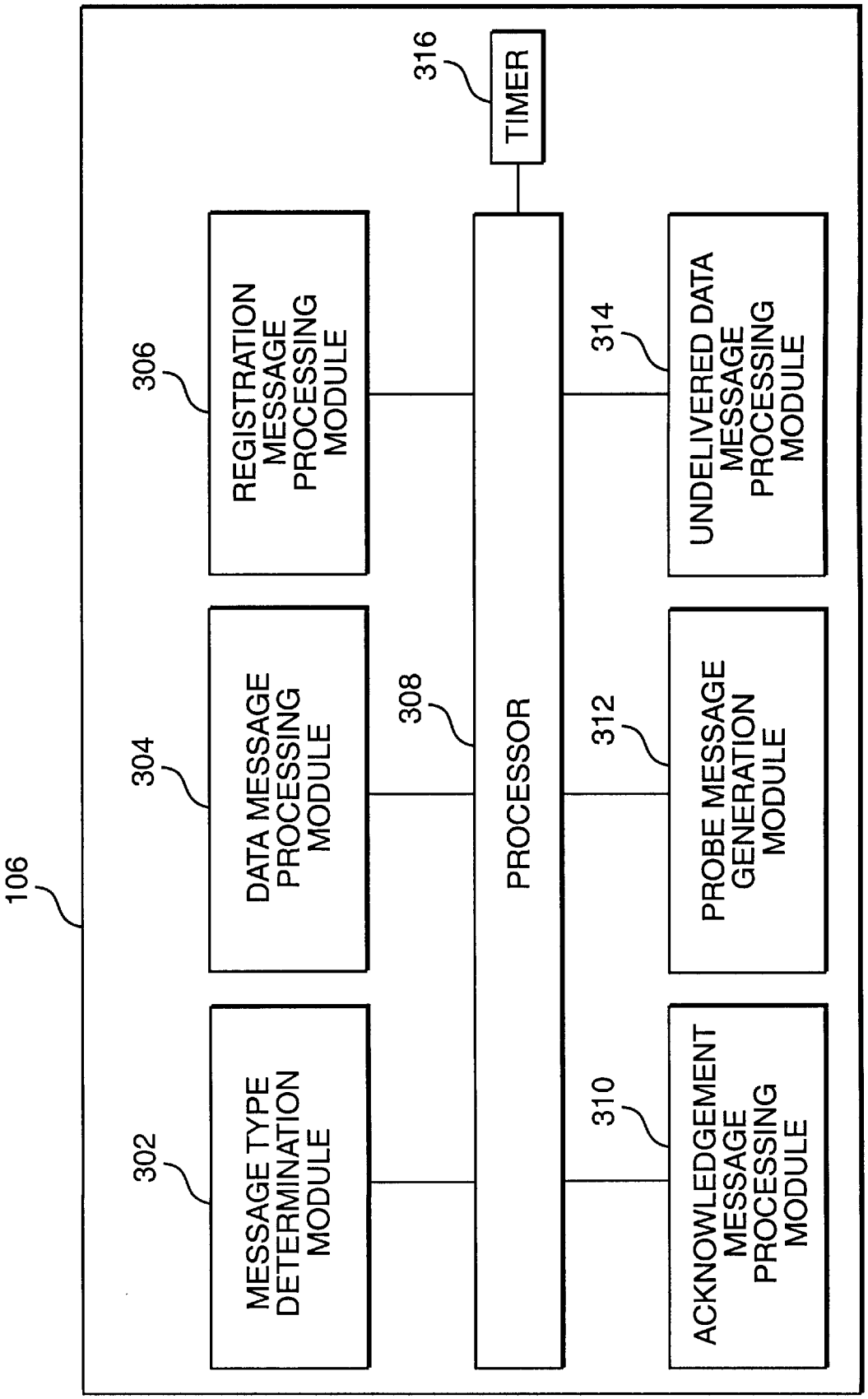
106
302
MESSAGE TYPE DETERMINATION MODULE
304
DATA MESSAGE PROCESSING MODULE
306
REGISTRATION MESSAGE PROCESSING MODULE
308
PROCESSOR
316
TIMER
310
ACKNOWLEDGEMENT MESSAGE PROCESSING MODULE
312
PROBE MESSAGE GENERATION MODULE
314
UNDELIVERED DATA MESSAGE PROCESSING MODULE

FIG.3

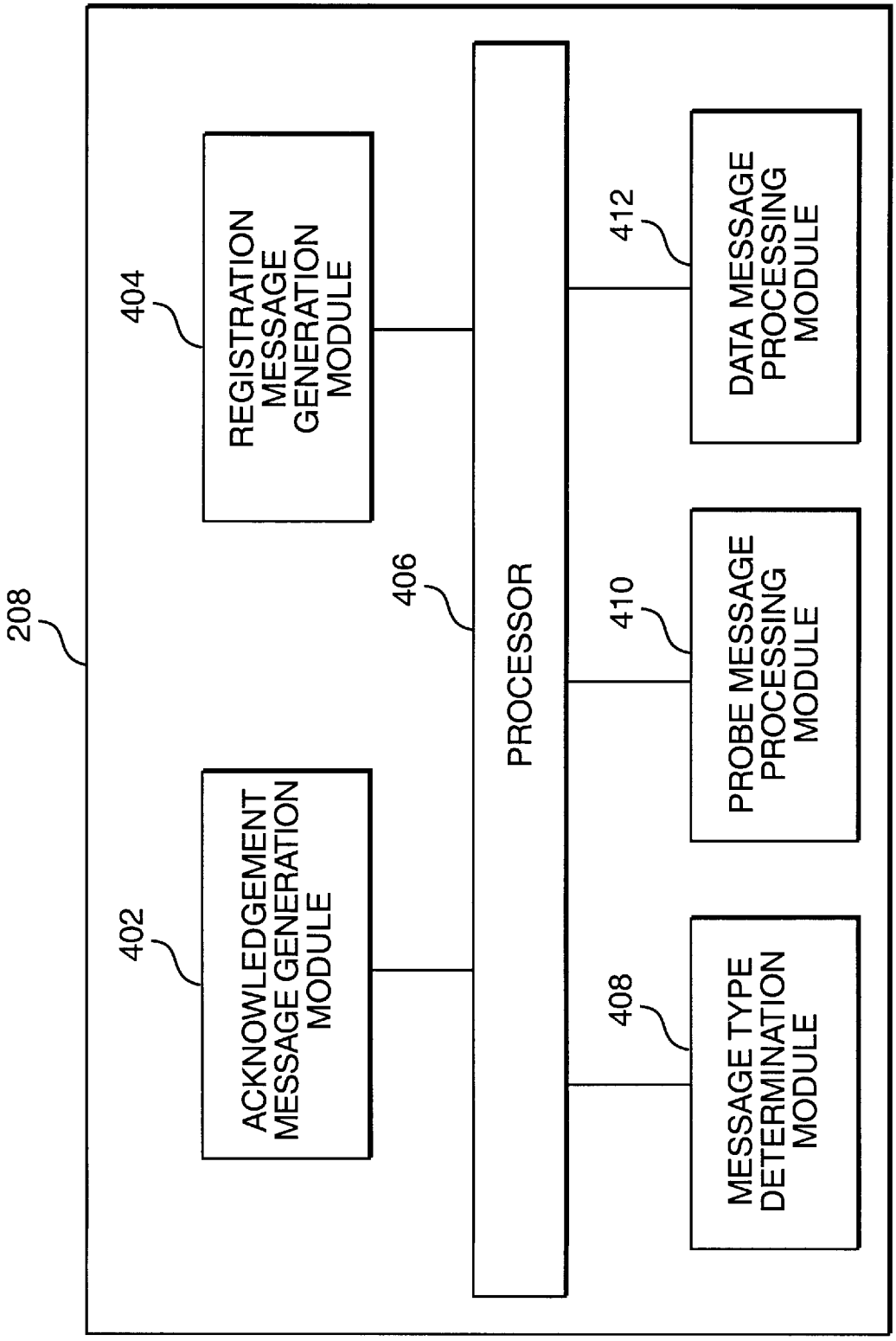
208
402
ACKNOWLEDGEMENT MESSAGE GENERATION MODULE
404
REGISTRATION MESSAGE GENERATION MODULE
406
PROCESSOR
408
MESSAGE TYPE DETERMINATION MODULE
410
PROBE MESSAGE PROCESSING MODULE
412
DATA MESSAGE PROCESSING MODULE

FIG.4

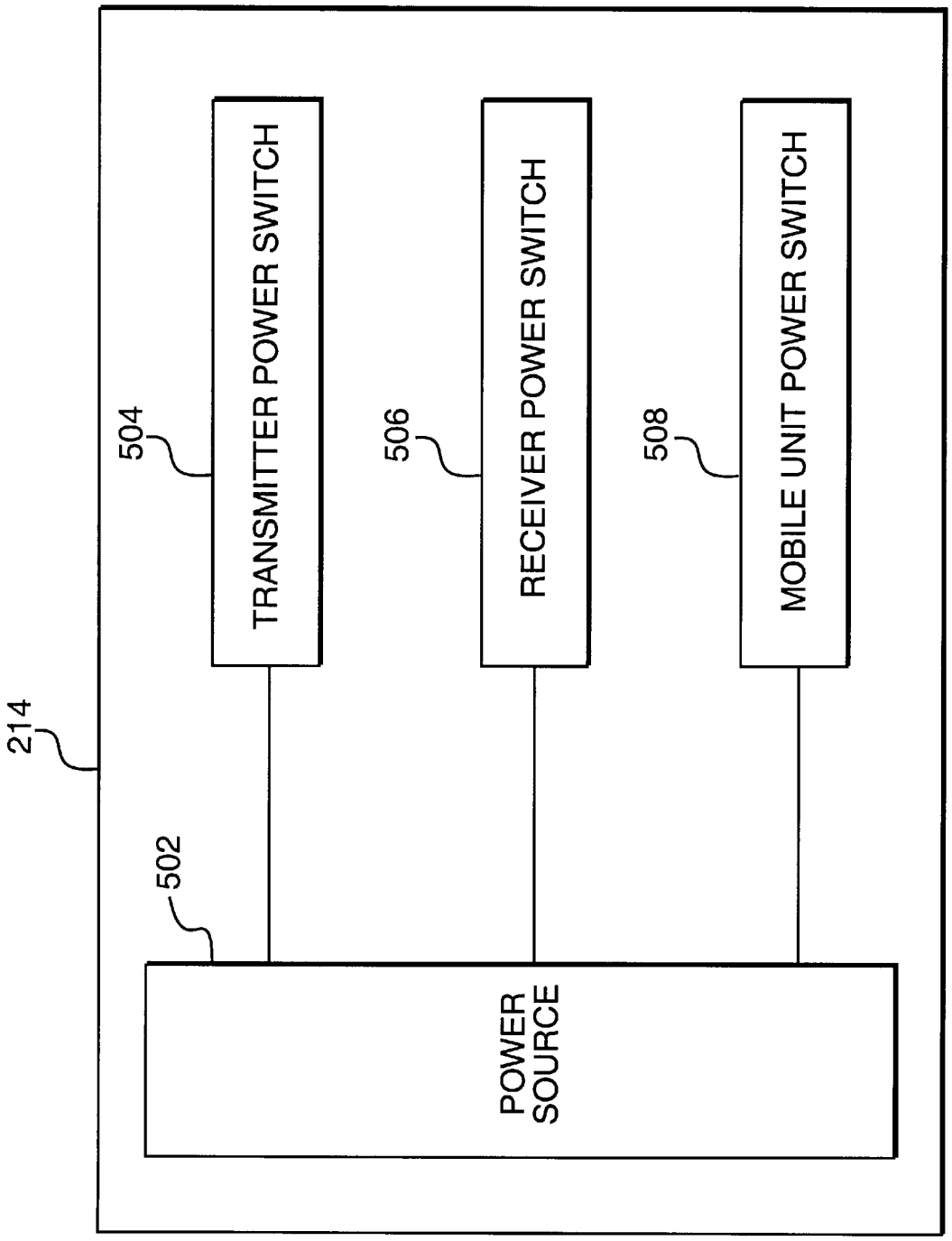
214
502
POWER SOURCE
504
TRANSMITTER POWER SWITCH
506
RECEIVER POWER SWITCH
508
MOBILE UNIT POWER SWITCH

FIG.5

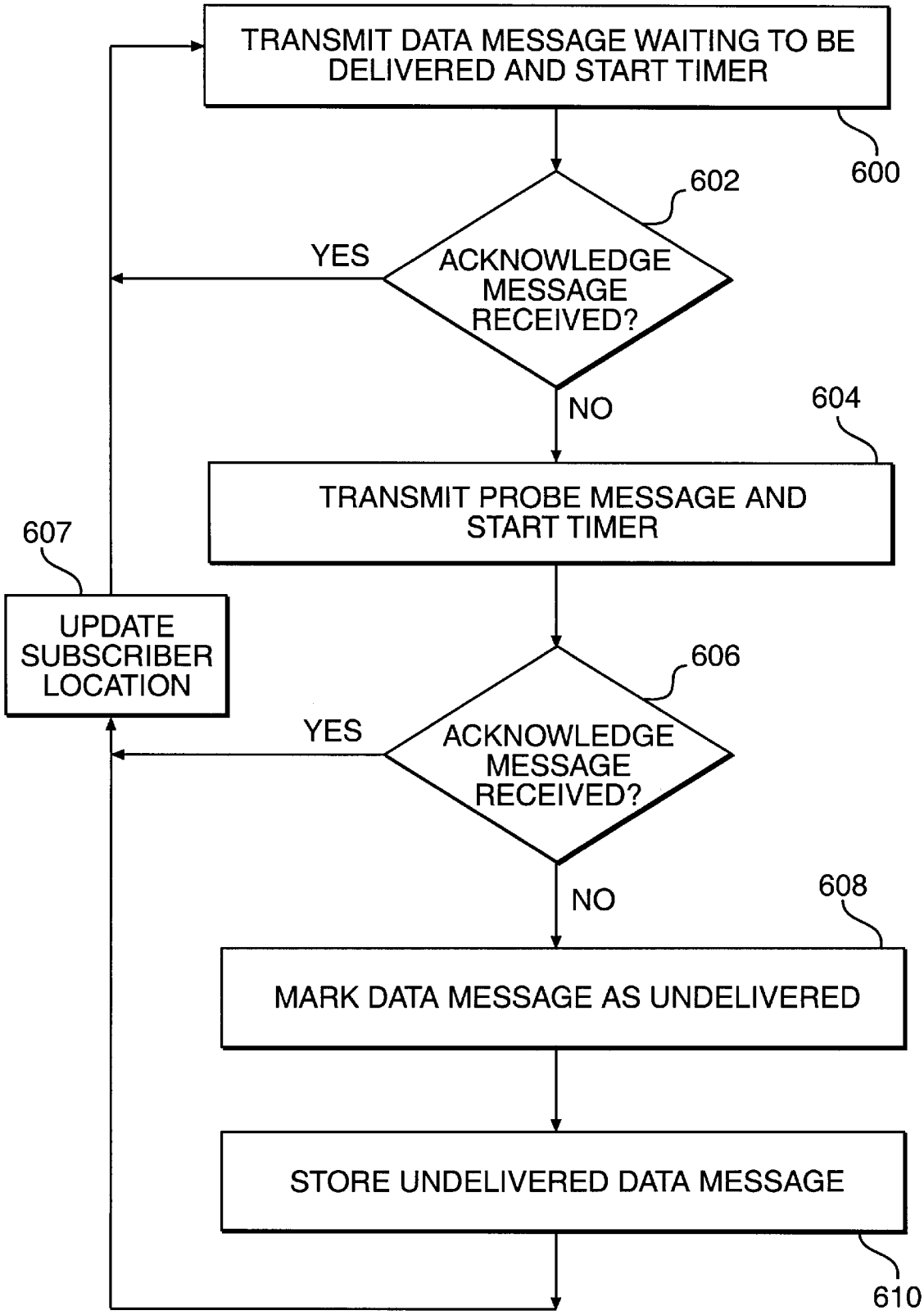
TRANSMIT DATA MESSAGE WAITING TO BE DELIVERED AND START TIMER
600
602
ACKNOWLEDGE MESSAGE RECEIVED?
YES
NO
604
TRANSMIT PROBE MESSAGE AND START TIMER
607
UPDATE SUBSCRIBER LOCATION
606
ACKNOWLEDGE MESSAGE RECEIVED?
YES
NO
608
MARK DATA MESSAGE AS UNDELIVERED
STORE UNDELIVERED DATA MESSAGE
610

FIG.6

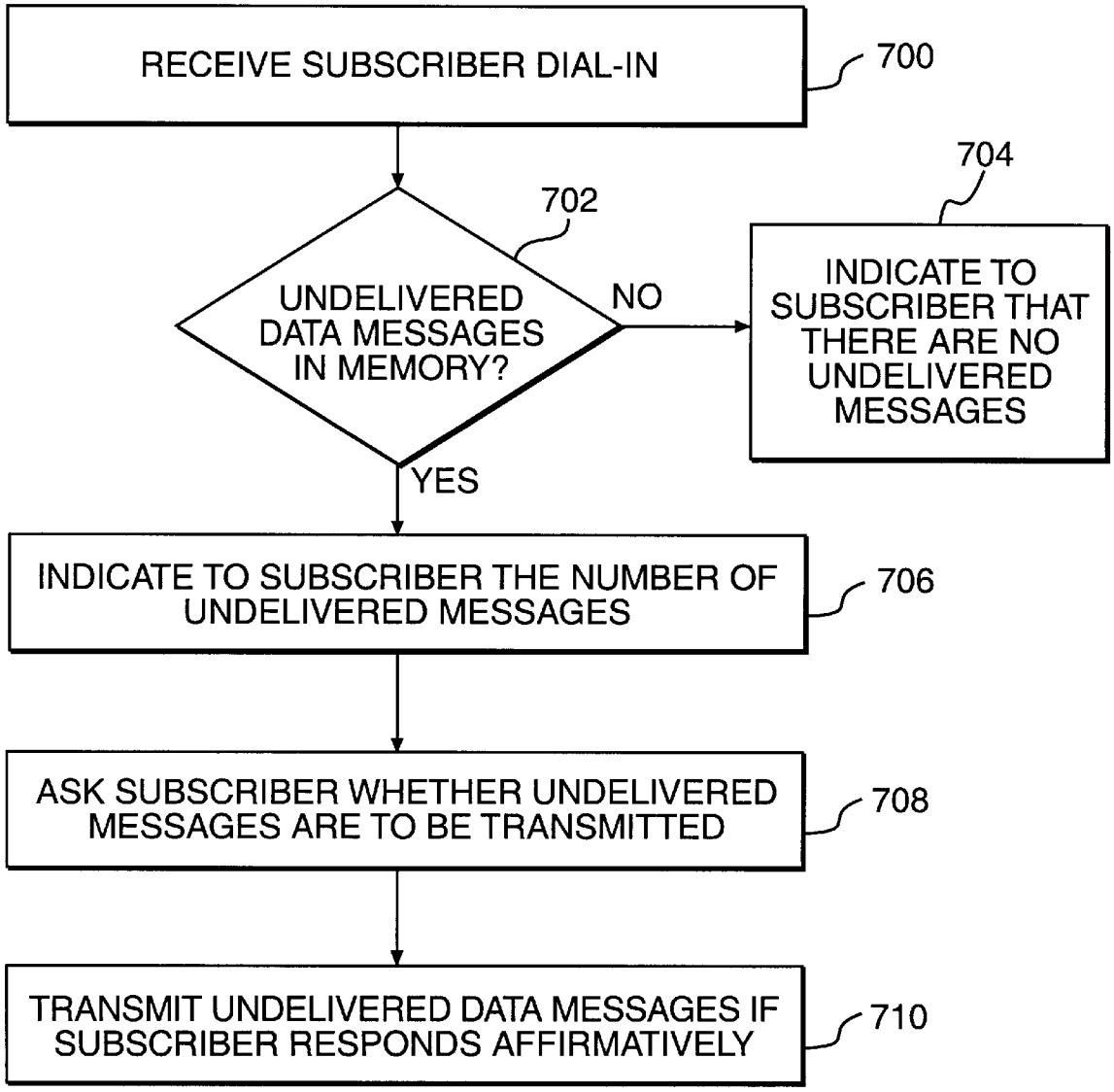
RECEIVE SUBSCRIBER DIAL-IN
700
702
UNDELIVERED DATA MESSAGES IN MEMORY?
NO
704
INDICATE TO SUBSCRIBER THAT THERE ARE NO UNDELIVERED MESSAGES
YES
INDICATE TO SUBSCRIBER THE NUMBER OF UNDELIVERED MESSAGES
706
ASK SUBSCRIBER WHETHER UNDELIVERED MESSAGES ARE TO BE TRANSMITTED
708
TRANSMIT UNDELIVERED DATA MESSAGES IF SUBSCRIBER RESPONDS AFFIRMATIVELY
710

FIG.7

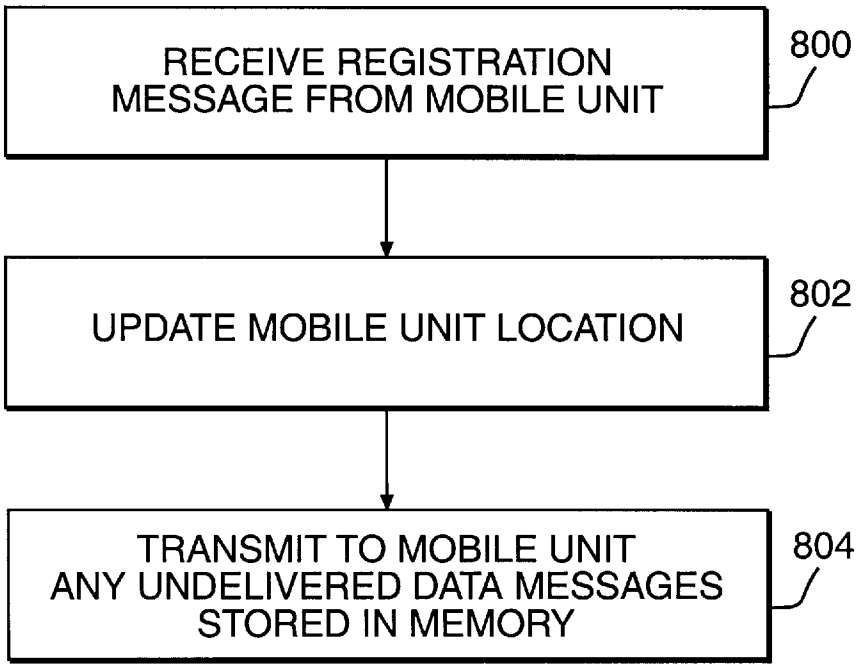
RECEIVE REGISTRATION MESSAGE FROM MOBILE UNIT
800
UPDATE MOBILE UNIT LOCATION
802
TRANSMIT TO MOBILE UNIT ANY UNDELIVERED DATA MESSAGES STORED IN MEMORY
804

FIG.8

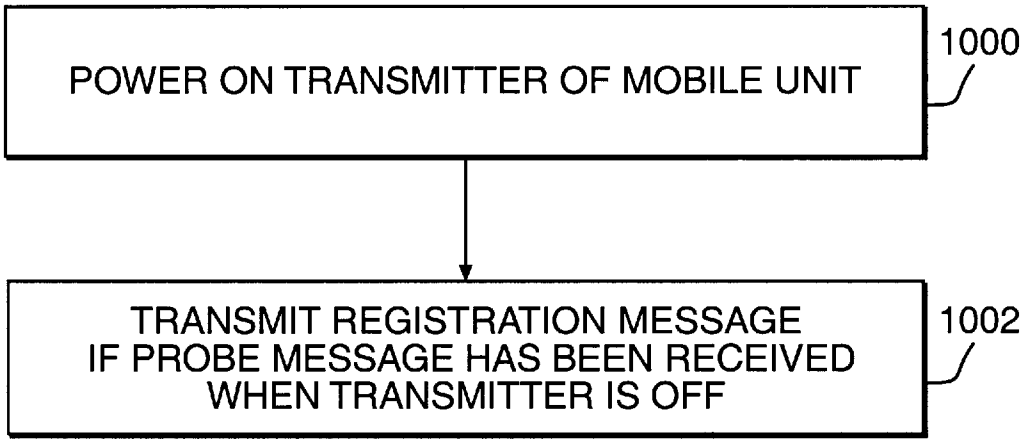
POWER ON TRANSMITTER OF MOBILE UNIT
1000
TRANSMIT REGISTRATION MESSAGE IF PROBE MESSAGE HAS BEEN RECEIVED WHEN TRANSMITTER IS OFF
1002

FIG.10

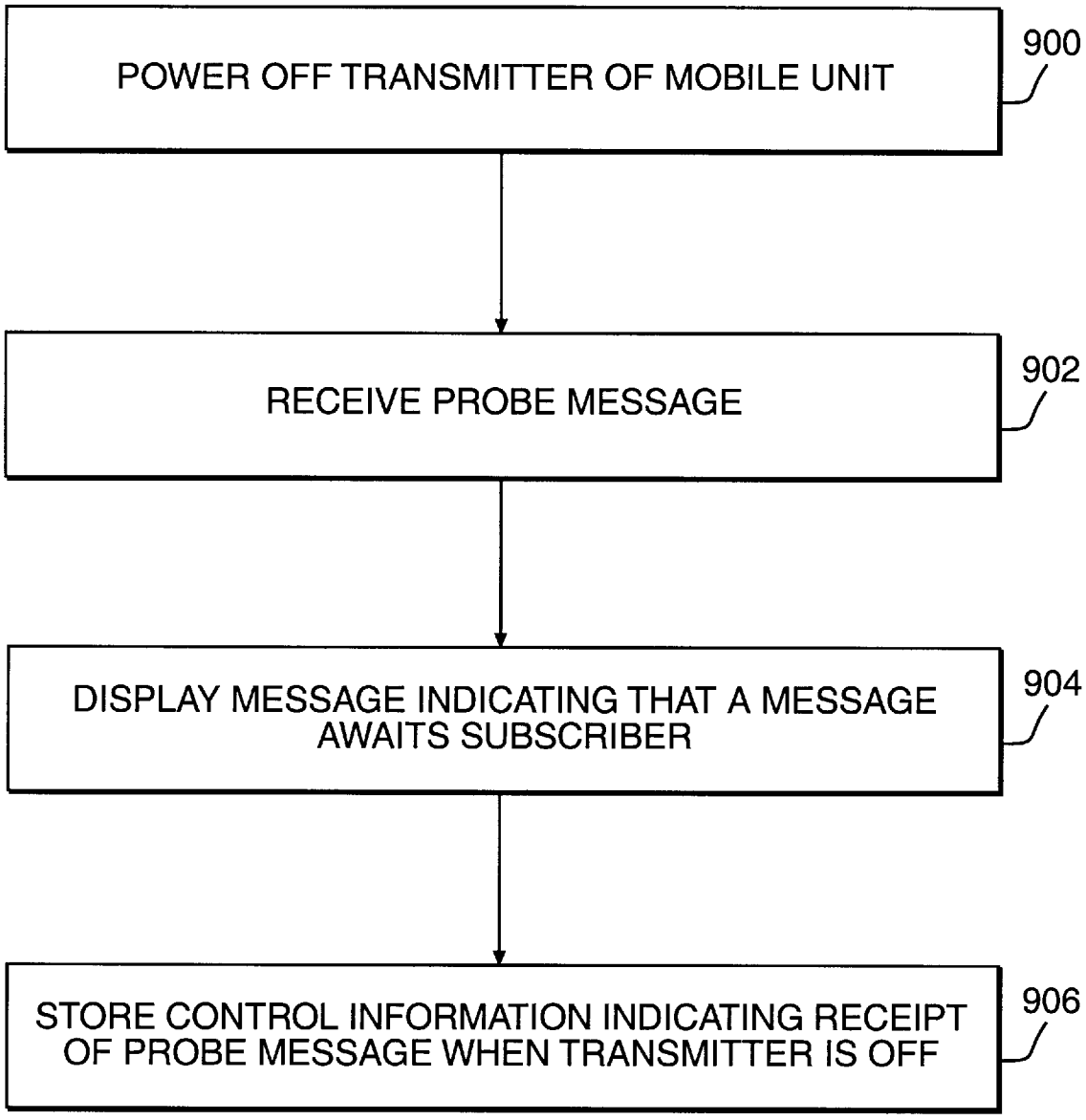
POWER OFF TRANSMITTER OF MOBILE UNIT
900
RECEIVE PROBE MESSAGE
902
DISPLAY MESSAGE INDICATING THAT A MESSAGE AWAITS SUBSCRIBER
904
STORE CONTROL INFORMATION INDICATING RECEIPT OF PROBE MESSAGE WHEN TRANSMITTER IS OFF
906

FIG.9

METHOD AND DEVICE FOR PROCESSING UNDELIVERED DATA MESSAGES IN A TWO-WAY WIRELESS COMMUNICATIONS SYSTEM

BACKGROUND OF THE INVENTION

1. Field of the Invention

The present invention relates generally to methods and devices for two-way wireless communications. More particularly, the present invention relates to methods and devices for processing data messages between a network operations center and a mobile unit in a two-way wireless network.

2. Description of the Related Art

Portable wireless communication devices are gaining widespread popularity because they provide subscribers access to information while on the move. Conventional wireless communications networks are typically one-way paging systems wherein messages are transmitted from a central paging station to a personal pager.

Such conventional systems are one-way in the sense that the pager has no transmission capability. The pager can only receive messages from the central paging station and is, therefore, incapable of acknowledging the receipt of messages back to the central paging station. Because of this limitation, the central paging station has no way of knowing whether a message has been successfully delivered to the pager. The paging station simply transmits the page and assumes that the subscriber received it. There can be various reasons, however, why a message cannot be successfully delivered. For example, the pager may be outside the range of the paging station or, simply, turned off.

Two-way data messaging systems are different. They allow communication in both directions between a network operations center and a mobile unit. A two-way messaging system is described, for example, in the U.S. patent application Ser. No. 08/124,219, filed Sep. 21, 1993, the contents of which are incorporated herein by reference. That application describes that the mobile unit is capable of acknowledging that it accurately received a message sent from the network operations center. The acknowledgment, however, does not indicate whether it is acknowledging the receipt of a data message or a probe message (a message sent by the network operations center to locate a mobile unit). Thus, there is a need for methods and devices that allow two-way communications between a network operations center and a personal mobile unit such that successfully delivered data messages and probe messages from the network operations center can be distinctively acknowledged by the mobile unit. A need also exists to provide two-way communications between a network operations center and a personal mobile unit and have unsuccessfully delivered messages marked and stored for future delivery.

SUMMARY OF THE INVENTION

Accordingly, the present invention is directed to methods and devices that substantially obviate one or more of the problems due to limitations and disadvantages of the related art.

In a preferred embodiment, the present invention includes a network operations center for transmitting and receiving messages to and from a wireless mobile unit, comprising means for transmitting messages to the mobile unit; means for receiving acknowledgment messages from the mobile unit acknowledging receipt of the messages sent; means for determining whether a received acknowledgment message is an acknowledgment to a data message or an acknowledgment to a probe message; means for transmitting a probe message to the mobile unit if, after transmitting a data message to the mobile unit, no data acknowledgment message is received; means for marking a data message as undelivered and storing the undelivered data message if, after transmitting a probe message to the mobile unit, no probe acknowledgment message is received; means for receiving registration messages from the mobile unit; and means for automatically transmitting undelivered data messages to the mobile unit upon receiving a registration message from the mobile unit.

In another embodiment, the invention includes a wireless mobile unit for receiving and transmitting messages from and to a network operations center, comprising means for receiving messages from the network operations center; means for transmitting, upon receiving a data message, a data acknowledgment message to the network operations center acknowledging receipt of the data message; means for transmitting, upon receiving a probe message, a probe acknowledgment message to the network operations center acknowledging receipt of the probe message; means for powering off only the transmitter of the mobile unit; means for receiving and recognizing probe messages sent by the network operations center when the transmitter is powered off; means for displaying, upon receipt of a probe message when the transmitter is powered off, an indication that the network operations center has attempted delivery; means for determining, upon power restoration to the transmitter, whether a probe message has been received when the transmitter is powered off; and means for transmitting, upon power restoration to the transmitter, a registration message to the network operations center if a probe message has been received when the transmitter is powered off.

In yet another embodiment, the invention includes, in a two-way wireless communications system, a method of processing data messages that cannot be successfully transmitted from a network operations center to a wireless mobile unit, comprising the steps of transmitting messages from the network operations center to the mobile unit; receiving at the network operations center acknowledgment messages from the mobile unit acknowledging receipt of the messages sent by the network operations center; transmitting a probe message from the network operations center to the mobile unit if, after transmitting a data message to the mobile unit, no data acknowledgment message is received at the network operations center; marking at the network operations center a data message as undelivered if, after transmitting a probe message to the mobile unit, no probe acknowledgment message is received at the network operations center; storing at the network operations center the undelivered data message; and transmitting undelivered data messages from the network operations center to the mobile unit upon receiving at the network operations center a registration message from the mobile unit.

It is to be understood that both the foregoing general description and the following detailed description are exemplary and explanatory only and are not restrictive of the invention as claimed.

BRIEF DESCRIPTION OF THE DRAWINGS

The accompanying drawings are included to provide a further understanding of the invention and are incorporated in and constitute a part of this specification, illustrate a preferred embodiment of the invention, and, together with the description, serve to explain the principles of the invention.

In the drawings:

FIG. **1** illustrates a block diagram of a network operations center, in accordance with a preferred embodiment of the present invention;

FIG. **2** illustrates a block diagram of a mobile unit used in a two-way wireless communications system, in accordance with a preferred embodiment of the present invention;

FIG. **3** illustrates a block diagram of a central computer of the network operations center shown in FIG. **1**, in accordance with a preferred embodiment of the present invention;

FIG. **4** illustrates a block diagram of a controller of the mobile unit shown in FIG. **2**, in accordance with a preferred embodiment of the present invention;

FIG. **5** illustrates a block diagram of a power module of the mobile unit shown in FIG. **2**, in accordance with a preferred embodiment of the present invention;

FIG. **6** illustrates a flow diagram of a method of delivering a data message and processing an undeliverable data message, in accordance with a preferred embodiment of the present invention;

FIG. **7** illustrates a flow diagram of a method of transmitting undelivered data messages upon subscriber dial-in, in accordance with a preferred embodiment of the present invention;

FIG. **8** illustrates a flow diagram of a method of transmitting undelivered data messages upon mobile unit registration, in accordance with a preferred embodiment of the present invention;

FIG. **9** illustrates a flow diagram of a method of notifying a subscriber that a message awaits, in accordance with a preferred embodiment of the present invention; and

FIG. **10** illustrates a flow diagram of a method of mobile unit registration, in accordance with a preferred embodiment of the present invention.

DETAILED DESCRIPTION OF THE INVENTION

FIG. **1** shows a block diagram of network operations center **100**, in accordance with a preferred embodiment of the present invention. Network operations center **100** includes dial-in access unit **102**, message receiving unit **104**, central computer **106**, message transmitting unit **108**, and memory storage unit **110**. Central computer **106** is connected to dial-in access unit **102**, message receiving unit **104**, message transmitting unit **108**, and memory storage unit **110**. The network operations center is more completely described in the incorporated U.S. patent application Ser. No. 08/124,219.

In a preferred embodiment of the invention, dial-in access unit **102** allows a subscriber or a caller to contact network operations center **100** via the telephone network. For example, a caller may dial-in to leave a message for the subscriber, and a subscriber may dial in to change subscription parameters or retrieve undelivered messages.

Message receiving unit **104** receives messages and forwards them to central computer **106**. In accordance with the present invention, message receiving unit **104** receives at least three different types of messages: data messages, acknowledgment messages, and registration messages.

Message transmitting unit **108** transmits messages forwarded to it from central computer **106**. In accordance with the present invention, message transmitting unit **108** transmits at least two different types of messages: data messages and probe messages.

Central computer **106** controls the operation of network operations center **100**. In particular, central computer **106** preferably receives messages forwarded by message receiving unit **104**, processes received messages, forwards received messages to memory storage unit **110**, generates probe messages, forwards data messages waiting to be delivered in memory storage unit **110** to message transmitting unit **108**, marks undelivered data messages, and stores undelivered data messages in memory storage unit **110** for future delivery. Central computer **106** is described in greater detail below in connection with FIG. **3**.

Memory storage unit **110** preferably provides storage for received messages, control information, and undelivered messages.

FIG. **2** shows a block diagram of a mobile unit **200**, in accordance with a preferred embodiment of the present invention. Mobile unit **200** includes transmitter **202**, receiver **204**, display **206**, controller **208**, key pad **210**, memory **212**, and power module **214**. Controller **208** is connected to transmitter **202**, receiver **204**, display **206**, key pad **210**, memory **212**, and power module **214**.

Transmitter **202** transmits messages forwarded to it from controller **208**. Preferably, transmitter **202** transmits at least three different types of messages: data messages, acknowledgment messages, and registration messages. There are preferably two forms of acknowledgment messages: data acknowledgment messages generated by a mobile unit to acknowledge receipt of data messages and probe acknowledgment messages generated by a mobile unit to acknowledge receipt of probe messages (defined below) transmitted from a network operations center. A registration message is generally a message generated by a mobile unit to update its location to the network operations center.

Receiver **204** receives messages and forwards them to controller **208**. Receiver **204** preferably receives at least two different types of messages: data messages and probe messages. A probe message, as described above, is generally a message generated by a network operations center to locate a mobile unit.

Controller **208** controls the operation of mobile unit **200**. For example, controller **208** receives messages forwarded by receiver **204**, processes received messages, forwards received messages to display **206** or memory **212**, forwards messages entered by a subscriber through key pad **210** to transmitter **202**, and controls power from power module **214** to transmitter **202**, receiver **204**, and mobile unit **200**. Controller **208** also preferably generates acknowledgment and registration messages, as described in greater detail below in connection with FIG. **4**.

A subscriber preferably enters messages and commands through key pad **210** and display **206** in accordance with conventional techniques. Display **206** also displays messages received from controller **208** and messages entered by a subscriber.

Memory **212** provides storage for received messages and control information.

Power module **214** supplies power to the various components of mobile unit **200**. Power module **214** is described in greater detail below in connection with FIG. **5**.

FIG. **3** shows a block diagram of central computer **106** of network operations center **100**, in accordance with a preferred embodiment of the present invention. Central computer **106** includes message type determination (MTD) module **302**, data message processing (DMP) module **304**, registration message processing (RMP) module **306**, processor **308**, acknowledgment message processing (AMP)

module **310**, probe message generation (PMG) module **312**, and undelivered data message processing (UDMP) module **314**, and timer **316**.

MTD module **302** determines whether the message received by message receiving unit **104** is a data message, an acknowledgment message, or a registration message. As message receiving unit **104** receives an incoming message, it forwards the message to MTD module **302**. If MTD module **302** identifies the incoming message as a data message, then it forwards the message to DMP module **304**. If MTD module **302** identifies the incoming message as an acknowledgment message, then it forwards the message to AMP module **310**. If MTD module **302** identifies the incoming message as a registration message, then it forwards the message to RMP module **306**.

As DMP module **304** receives a data message from MTD module **302**, it forwards the message to message transmitting unit **108** to be delivered to the destination mobile unit and starts an internal timer **316** for receiving acknowledgment of receipt by the destination mobile unit within a predetermined time period. If timer **316** expires before a data acknowledgment message is received, then DMP module **304** requests PMG module **312** to generate a probe message.

As AMP module **310** receives an acknowledgment message from MTD module **302**, it first determines whether the message is a data acknowledgment message or a probe acknowledgment message. If it is the former, then AMP module **310** indicates to DMP module **304** to forward to message transmitting unit **108** the next data message in memory storage unit **110** waiting to be delivered to that subscriber. If it is the latter, then AMP module **310** updates in memory storage unit **110** the location of mobile unit **200** and indicates to DMP module **304** to re-send the last data message to message transmitting unit **108**. The location information comes from the location of the base receiver that relayed the probe acknowledgment message from the mobile unit to the network operations center as described in the incorporated U.S. patent application Ser. No. 08/124,219.

As PMG module **312** receives a request from DMP module **304** to generate a probe message, it creates a probe message, forwards it to message transmitting unit **108**, and starts timer **316** for receiving a probe acknowledgment message within a predetermined time period. If timer **316** expires before a probe acknowledgment message is received, then PMG module **312** requests UDMP module **314** to mark the last data message transmitted as undelivered.

Upon receiving a request from PMG module **312** to mark a data message as undelivered, UDMP module **314** marks the message accordingly and stores it in memory storage unit **110** for future delivery.

As RMP module **306** receives a registration message from MTD module **302**, it updates in memory storage unit **110** the location of mobile unit **200** and forwards to message transmitting unit **108** any undelivered data messages stored in memory storage unit **110**.

In a preferred embodiment, modules **302**, **304**, **306**, **310**, **312**, and **314** comprise software or microcode and any hardware necessary to effect the execution of that software or microcode in accordance with conventional techniques. In an alternative embodiment, modules **302**, **304**, **306**, **310**, **312**, and **314** can be implemented in electronic logic circuitry. Processor **308** is preferably any processor capable of executing the software or microcode of the foregoing modules and performing the processing functions described herein. Timer **316** is preferably any hardware or software timer capable of performing the timing functions described herein.

FIG. **4** shows a block diagram of controller **208** of mobile unit **200**, in accordance with a preferred embodiment of the present invention. Preferably, controller **208** includes acknowledgment message generation (AMG) module **402**, registration message generation (RMG) module **404**, processor **406**, message type determination (MTD) module **408**, probe message processing (PMP) module **410**, and data message processing (DMP) module **412**.

MTD module **408** determines whether the message received by receiver **204** is a data message or a probe message. As receiver **204** receives an incoming message, it forwards the message to MTD module **408**. If MTD module **408** identifies the incoming message as a data message, then it forwards the message to DMP module **412** and informs AMG module **402** to generate a data acknowledgment message. If MTD module **408** identifies the incoming message as a probe message, then it forwards the message to PMP module **410**.

As DMP module **412** receives a data message from MTD module **408**, it sends the message to display **206** to be viewed by a subscriber. If the subscriber chooses to save the message, then DMP module **412** also stores the received data message in memory **212**.

As PMP module **410** receives a probe message from MTD module **408**, it first determines whether transmitter **202** is powered on. If transmitter **202** is on, then PMP module **410** requests AMG module **402** to generate a probe acknowledgment message. If transmitter **202** is off, then PMP module **410** transfers to display **206** a message indicating to the subscriber that a message awaits and stores in memory **212** control information indicating that a probe message has been received when transmitter **202** is powered off.

Upon receiving from MTD module **408** or PMP module **410** a request to generate a data acknowledgment message or a probe acknowledgment message, respectively, AMG module **402** creates the appropriate acknowledgment message and forwards it to transmitter **202**.

RMG module **404** generates registration messages. In a preferred embodiment of the present invention, as transmitter **202** is powered on, RMG module **404** checks memory **212** for an indication that a probe message has been received when transmitter **202** is off. If such an indication exits, then RMG module **404** creates a registration message and forwards it to transmitter **202**.

In a preferred embodiment, modules **402**, **404**, **408**, **410**, and **412** comprise software or microcode and any hardware necessary to effect the execution of that software or microcode in accordance with conventional techniques. In an alternative embodiment, modules **402**, **404**, **408**, **410**, and **412** can be implemented in electronic logic circuitry. Processor **406** is preferably any processor capable of executing the foregoing software or microcode and performing the processing functions described herein.

FIG. **5** shows a block diagram of power module **214**, in accordance with a preferred embodiment of the present invention. Power module **214** includes power source **502**, transmitter power switch **504**, receiver power switch **506**, and mobile unit power switch **508**. Power source **502** is preferably any source, such as a battery, capable of supplying the power required by mobile unit **200**.

Transmitter power switch **504** preferably allows a subscriber to turn on or off transmitter **202** of mobile unit **200**. Receiver power switch **506** preferably allows a subscriber to

turn on or off receiver **204** of mobile unit **200**. Mobile unit power switch **508** preferably allows a subscriber to turn on or off the entire mobile unit **200** including transmitter **202**, receiver **204**, and display **206**.

There may be occasions when a subscriber wishes to turn off only transmitter **202** or only receiver **204** to conserve power. For example, when mobile unit **200** is in flight on a aircraft, base receivers on the ground may be out of range of transmitter **202** or regulations may prohibit transmissions from the aircraft. In this situation, a subscriber may simply choose to turn off transmitter **202** to conserve battery power, while leaving receiver **204** on to receive probe messages so the subscriber can be notified of message delivery attempts by network operations center **100**.

FIG. **6** shows a flow diagram depicting the operation of network operations center **100** in attempting data message delivery and processing undelivered data messages, in accordance with a preferred embodiment of the present invention. The process starts when network operations center **100** transmits a current data message through message transmitting unit **108** to the last known location of a corresponding mobile unit and DMP module **304** starts timer **316** for receiving a data acknowledgment message as described above (step **600**). MTD module **302** then checks incoming messages to identify a data acknowledgment message from the corresponding mobile unit (step **602**). If a data acknowledgment message is received before timer **316** expires, then network operations center **100** repeats steps **600** and **602** to transmit the next data message waiting to be delivered.

If no data acknowledgment message is received before timer **316** expires, then DMP module **304** requests PMG module **312** to generate a probe message. This scenario can arise, for example, when the subscriber is in flight on a airplane, and the corresponding mobile unit has changed location since its last location update to the network operations center. PMG module **312** transmits a probe message through message transmitting unit **108** to the corresponding mobile unit and starts timer **316** for receiving a probe acknowledgment message as described above (step **604**). MTD module **302** then checks incoming messages to identify a probe acknowledgment message from the corresponding mobile unit (step **606**). If a probe acknowledgment message is received before timer **316** expires, then AMP module **310** updates in memory storage unit **110** the location of the corresponding mobile unit (step **607**), and network operations center **100** repeats steps **600**, **602**, **604**, and **606** to re-transmit the last data message.

If no probe acknowledgment message is received before timer **316** expires, then PMG module **312** requests UDMP module **314** to mark the last data message transmitted as undelivered. Again, this scenario can arise when, for example, the subscriber is in flight on an airplane and the transmitter of the corresponding mobile unit is powered off because regulations prohibit transmissions from the airplane. UDMP module **314** then marks the message as undelivered (step **608**) and stores it in memory storage unit **110** for future delivery (step **610**).

It is possible that the corresponding mobile unit will acknowledge a probe message but not a data message sent from the network operations center because the transmission range or strategy for a probe message may differ from that of a data message, as described in the incorporated U.S. patent application Ser. No. 08/124,219. For example, a data message may be transmitted by the network operations center only to the last known location of the corresponding mobile unit. Therefore, if the mobile unit has moved, it may miss the data message. On the other hand, a probe message is preferably broadcast by the network operations center to all locations covered by all base transmitters, so there is a very high likelihood that it will reach the corresponding mobile unit even if the mobile unit has moved.

FIG. **7** shows a flow diagram depicting a method of transmitting undelivered data messages when a subscriber dials-in to network operations center **100**, in accordance with a preferred embodiment of the present invention. The process starts when network operations center **100** receives subscriber dial-in through dial-in access (DA) unit **102** (step **700**). For example, when a subscriber traveling on an airplane lands, he may dial-in to the network operations center to check whether there are any undelivered messages for him. In response to a prompt (e.g., a voice prompt) from network operations center **100**, the subscriber indicates that he wishes to check for undelivered messages. DA unit **102** checks memory storage unit **110** to determined whether there exists any undelivered data messages for that subscriber (step **702**). If not, then DA unit **102** indicates to the subscriber that currently there are no undelivered messages (step **704**). If there are undelivered data messages, then DA unit **102** preferably indicates to the subscriber the number of such messages (step **706**) and inquires whether the subscriber wishes to receive them (step **708**). If the subscriber responds affirmatively, then message transmitting unit **108** re-transmits the undelivered data messages (step **710**).

FIG. **8** shows a flow diagram depicting a method of transmitting undelivered data messages upon mobile unit registration, in accordance with a preferred embodiment of the present invention. The process starts when network operations center **100** receives through message receiving unit **104** an incoming message which MTD module **302** determines to be a registration message (step **800**). A registration message may be sent by a mobile unit upon power restoration to the transmitter of the mobile unit if a probe message has been received when the transmitter is powered off. RMP module **306** then updates in memory storage unit **110** the location of the corresponding mobile unit as described above (step **802**) and transmits through message transmitting unit **108** any undelivered data messages stored in memory storage unit **110** (step **804**).

FIG. **9** shows a flow diagram depicting the operation of mobile unit **200** in receiving a probe message while its transmitter is powered off, in accordance with a preferred embodiment of the present invention. Transmitter **202** is turned off by a subscriber, as described, for example, to conserve power when the subscriber is in flight on an airplane and regulations prohibit mobile unit transmission from the airplane (step **900**). While transmitter **202** is off, receiver **204** receives an incoming message which MTD module **408** determines to be a probe message as described above (step **902**). Mobile unit **200** cannot acknowledge receipt of the probe message because transmitter **202** is off. PMP module **410** then indicates to the subscriber through display **206** that there is a message waiting to be delivered from network operations center **100** (step **904**). The subscriber can choose to dial-in to the network operations center to retrieve the message from the airplane or when he lands. PMP module **410** also stores in memory **212** control information indicating that mobile unit **200** has received a probe message when transmitter **202** is powered off (step **906**).

FIG. **10** shows a flow diagram depicting the operation of mobile unit **200** in registering upon power restoration to transmitter **202**, in accordance with a preferred embodiment of the present invention. Transmitter **202** is turned back on, for example, when a subscriber traveling on an airplane

lands (step **1000**), RMG module **404** checks memory **212** for control information indicating that mobile unit **200** has received a probe message when transmitter **202** is off. If such an indication exits, then RMG module **404** sends a registration message through transmitter **202** to network operations center **100** to update the current location of mobile unit **200** (step **1002**).

It will be apparent to those skilled in the art that various modifications and variations can be made in the methods and devices of the present invention without departing from the spirit or scope of the invention. Thus, it is intended that the present invention cover the modifications and variations of this invention provided they come within the scope of the appended claims and their equivalents.

What is claimed is:

1. A network operations center for transmitting and receiving messages to and from a wireless mobile unit comprising:

means for transmitting messages to the mobile unit;

means for receiving acknowledgment messages from the mobile unit;

means for determining whether an acknowledgment message is an acknowledgment to a data message or an acknowledgment to a probe message;

means for transmitting a probe message to the mobile unit if, after transmitting a data message to the mobile unit, no data acknowledgment message is received; and

means for marking a data message as undelivered and storing the undelivered data message if, after transmitting a probe message to the mobile unit, no probe acknowledgment message is received.

2. The network operations center according to claim **1**, further comprising:

means for receiving registration messages from the mobile unit; and

means for automatically transmitting undelivered data messages to the mobile unit upon receiving a registration message from the mobile unit.

3. The network operations center according to claim **1**, further comprising means for allowing dial-in access to undelivered data messages by a subscriber to retrieve the undelivered data messages.

4. A wireless mobile unit for receiving and transmitting messages from and to a network operations center comprising:

means for receiving data and probe messages from the network operations center;

a transmitter;

means for generating, upon receiving a data message, a data acknowledgment message, said data acknowledgment message being transmitted by said transmitter;

means for generating, upon receiving a probe message, a probe acknowledgment message, said probe acknowledgment message being transmitted by said transmitter;

means for powering the transmitter on and off;

means for determining whether a probe message has been received while said transmitter was powered off; and

means for generating, upon power restoration to the transmitter, a registration message if a probe message has been received while the transmitter was powered off, said registration message being transmitted by said transmitter.

5. The mobile unit according to claim **4**, further comprising means for displaying, upon receipt of a probe message when said transmitter is powered off, an indication that the network operations center has attempted message delivery.

6. The mobile unit according to claim **4**, further comprising a key pad for entering subscriber commands.

7. The mobile unit according to claim **4**, further comprising means for storing information indicating that a probe message has been received when the transmitter of the mobile unit is powered off.

8. In a two-way wireless communications system, a method of processing data messages that cannot be successfully transmitted from a network operations center to a wireless mobile unit comprising the steps of:

(a) transmitting a data message from the network operations center to the mobile unit;

(b) receiving at the network operations center a data acknowledgment message from the mobile unit acknowledging receipt of the data message sent by the network operations center;

(c) transmitting a probe message from the network operations center to the mobile unit if, after transmitting a data message to the mobile unit, no data acknowledgment message is received at the network operations center;

(d) marking at the network operations center a data message as undelivered if, after transmitting a probe message to the mobile unit, no probe acknowledgment message is received at the network operations center; and

(e) storing at the network operations center the undelivered data message.

9. A method according to claim **8**, further comprising the step of transmitting undelivered data messages from the network operations center to the mobile unit upon receiving at the network operations center a registration message from the mobile unit.

10. A method according to claim **8**, wherein a subscriber has dial-in access to the undelivered data messages stored at the network operations center to retrieve those data messages.

* * * * *