US 20030210669A1

(19) United States

(12) Patent Application Publication (10) Pub. No.: US 2003/0210669 A1

Vayanos et al. (43) Pub. Date: Nov. 13, 2003

(54) DATA DELIVERY IN CONJUNCTION WITH A HYBRID AUTOMATIC RETRANSMISSION MECHANISM IN CDMA COMMUNICATION SYSTEMS

(76) Inventors: **Alkinoos Hector Vayanos**, San Diego, CA (US); **Durga P. Malladi**, San Diego, CA (US); **Sai Yiu Duncan Ho**, San Diego, CA (US)

Correspondence Address:
Qualcomm Incorporated
Patents Department
5775 Morehouse Drive
San Diego, CA 92121-1714 (US)

(21) Appl. No.: **10/176,353**

(22) Filed: **Jun. 19, 2002**

Related U.S. Application Data

(60) Provisional application No. 60/380,408, filed on May 13, 2002.

Publication Classification

(51) **Int. Cl.**[7] **H04B 7/216**; H04L 12/28

(52) **U.S. Cl.** **370/335**; 370/394

(57) **ABSTRACT**

Techniques for delivering data recovered by an HARQ entity in proper order to higher layers in a CDMA system. In a method, packets are received from the HARQ entity by the re-ordering entity and missing packets among the received packets are detected. Packets may be transmitted in a sequential order based on transmission sequence numbers (TSNs) assigned to the packets, and missing packets may be detected based on the TSNs of the received packets. Delivery of received packets later than the missing packets are stalled because higher layers expect data in-order. A determination is thereafter made whether each missing packet is (1) subsequently received from the HARQ entity or (2) lost, by successively eliminating HARQ channels that may be used to send the missing packet. Received packets previously stalled by each missing packet are delivered after the missing packet is determined to be lost or received.

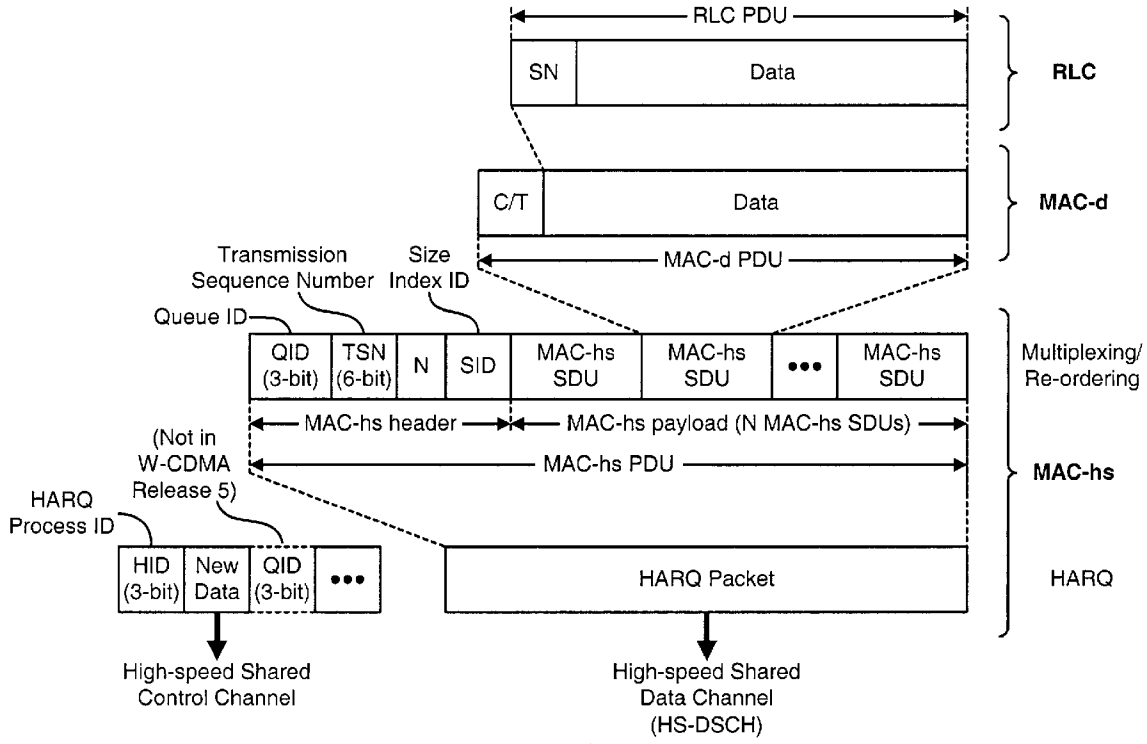

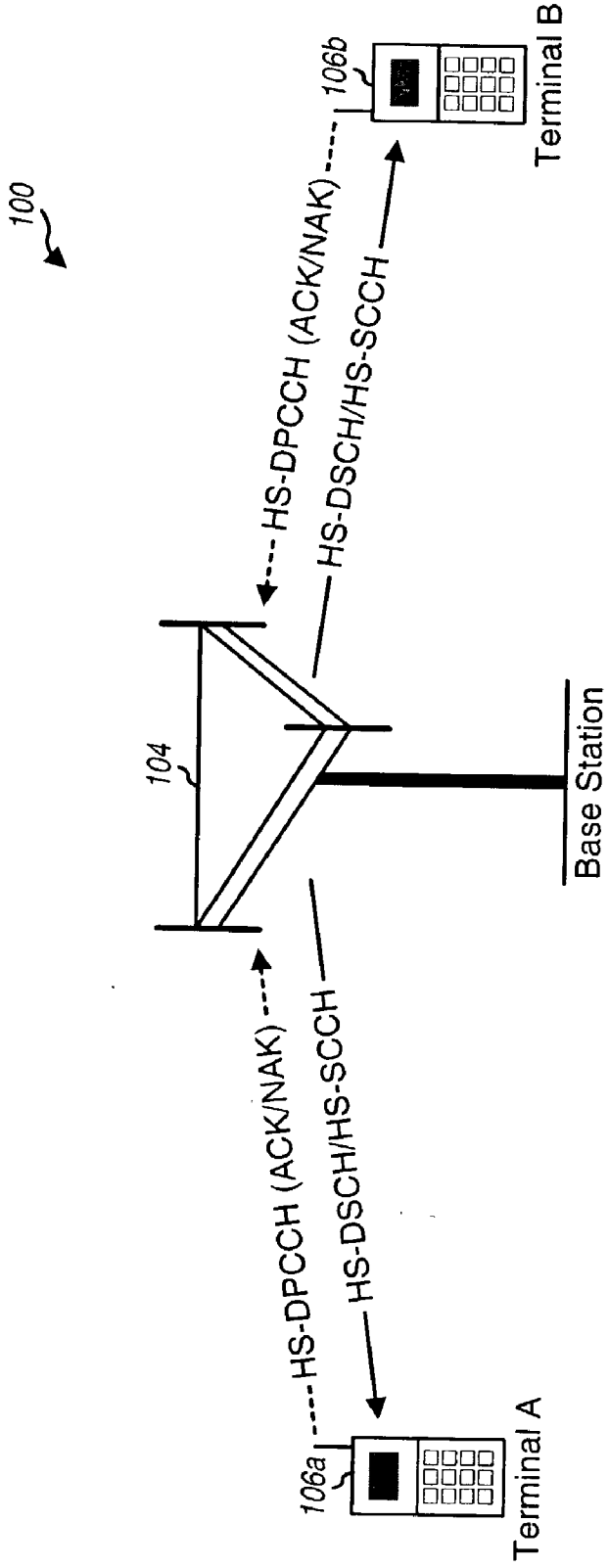
100
104
106a
106b
HS-DPCCH (ACK/NAK)
HS-DSCH/HS-SCCH
HS-DPCCH (ACK/NAK)
HS-DSCH/HS-SCCH
Terminal A
Terminal B
Base Station

FIG. 1

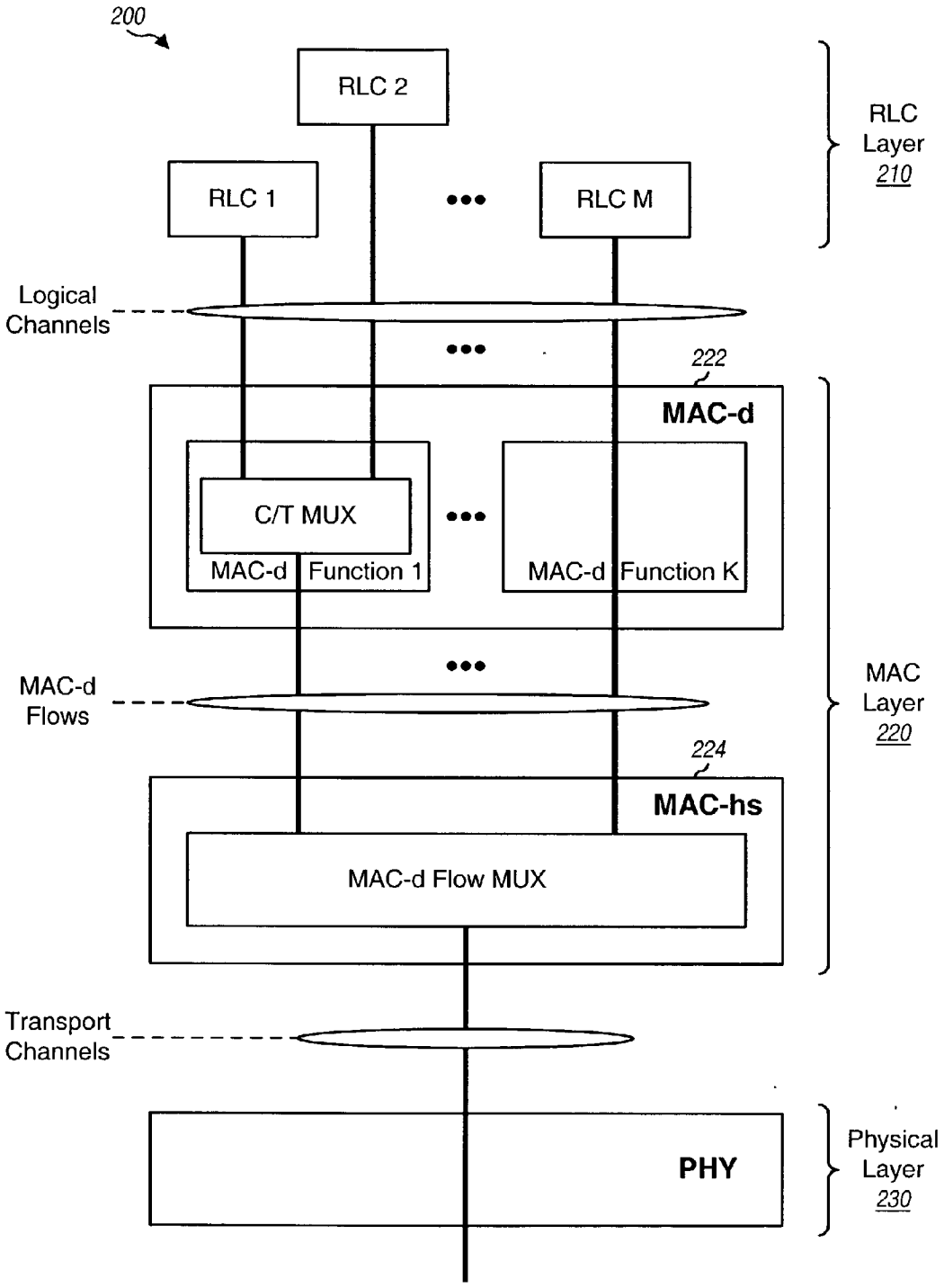
200
RLC 2
RLC 1
RLC M
RLC Layer 210
Logical Channels
222
MAC-d
C/T MUX
MAC-d Function 1
MAC-d Function K
MAC-d Flows
MAC Layer 220
224
MAC-hs
MAC-d Flow MUX
Transport Channels
PHY
Physical Layer 230

FIG. 2

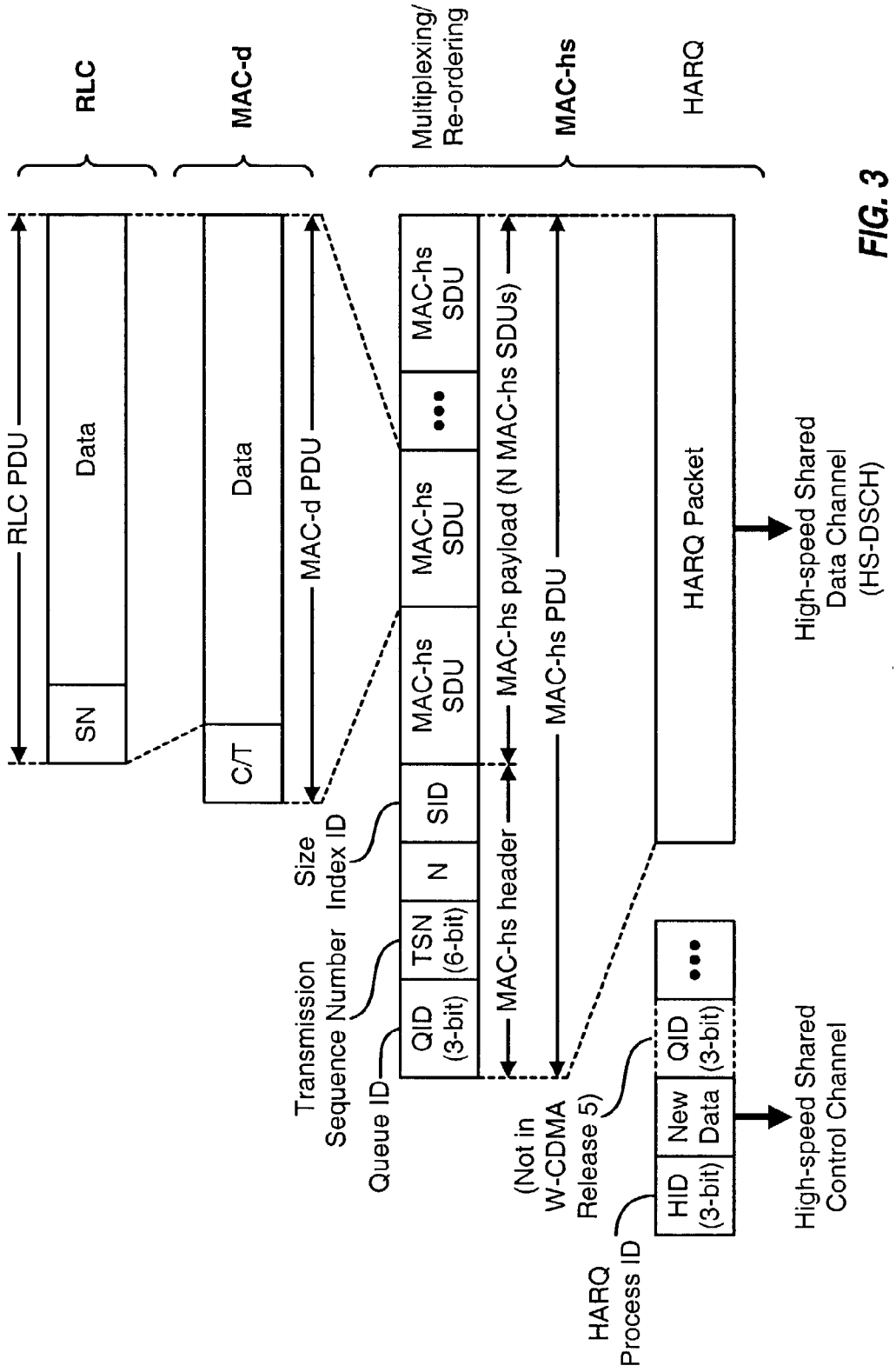
RLC
MAC-d
Multiplexing/
Re-ordering
MAC-hs
HARQ
RLC PDU
Data
SN
Data
C/T
MAC-d PDU
MAC-hs
SDU
MAC-hs
SDU
MAC-hs
SDU
MAC-hs payload (N MAC-hs SDUs)
MAC-hs PDU
HARQ Packet
High-speed Shared
Data Channel
(HS-DSCH)
Size
Index ID
SID
N
TSN
(6-bit)
QID
(3-bit)
Transmission
Sequence Number
Queue ID
MAC-hs header
(Not in
W-CDMA
Release 5)
HID
(3-bit)
New
Data
QID
(3-bit)
HARQ
Process ID
High-speed Shared
Control Channel

FIG. 3

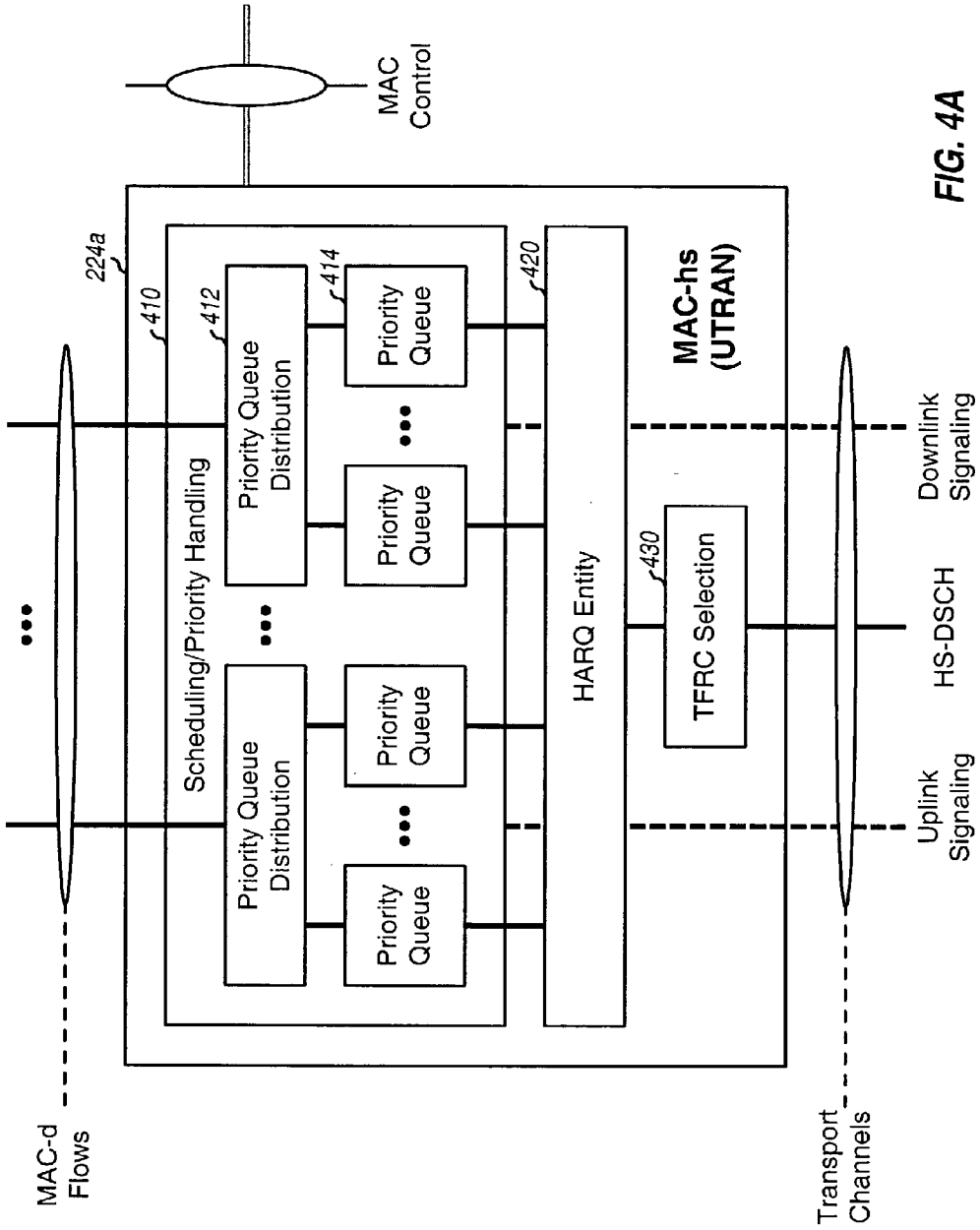
MAC-d Flows
224a
410
Scheduling/Priority Handling
412
Priority Queue Distribution
Priority Queue Distribution
414
Priority Queue
Priority Queue
Priority Queue
Priority Queue
420
HARQ Entity
MAC-hs (UTRAN)
430
TFRC Selection
MAC Control
Transport Channels
Downlink Signaling
HS-DSCH
Uplink Signaling

FIG. 4A

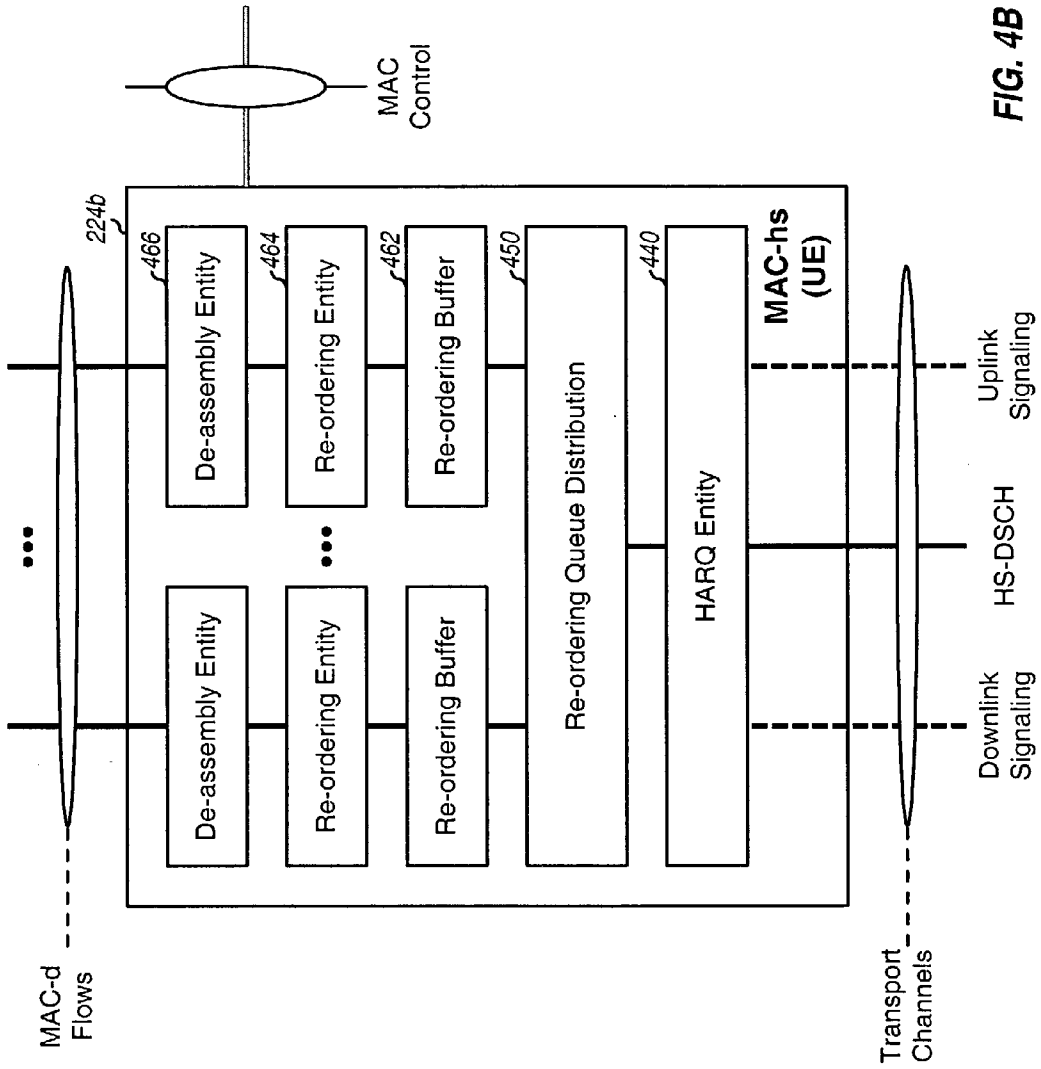
MAC-d Flows
224b
De-assembly Entity
De-assembly Entity
466
Re-ordering Entity
Re-ordering Entity
464
Re-ordering Buffer
Re-ordering Buffer
462
Re-ordering Queue Distribution
450
HARQ Entity
440
MAC-hs (UE)
MAC Control
Transport Channels
Downlink Signaling
HS-DSCH
Uplink Signaling

FIG. 4B

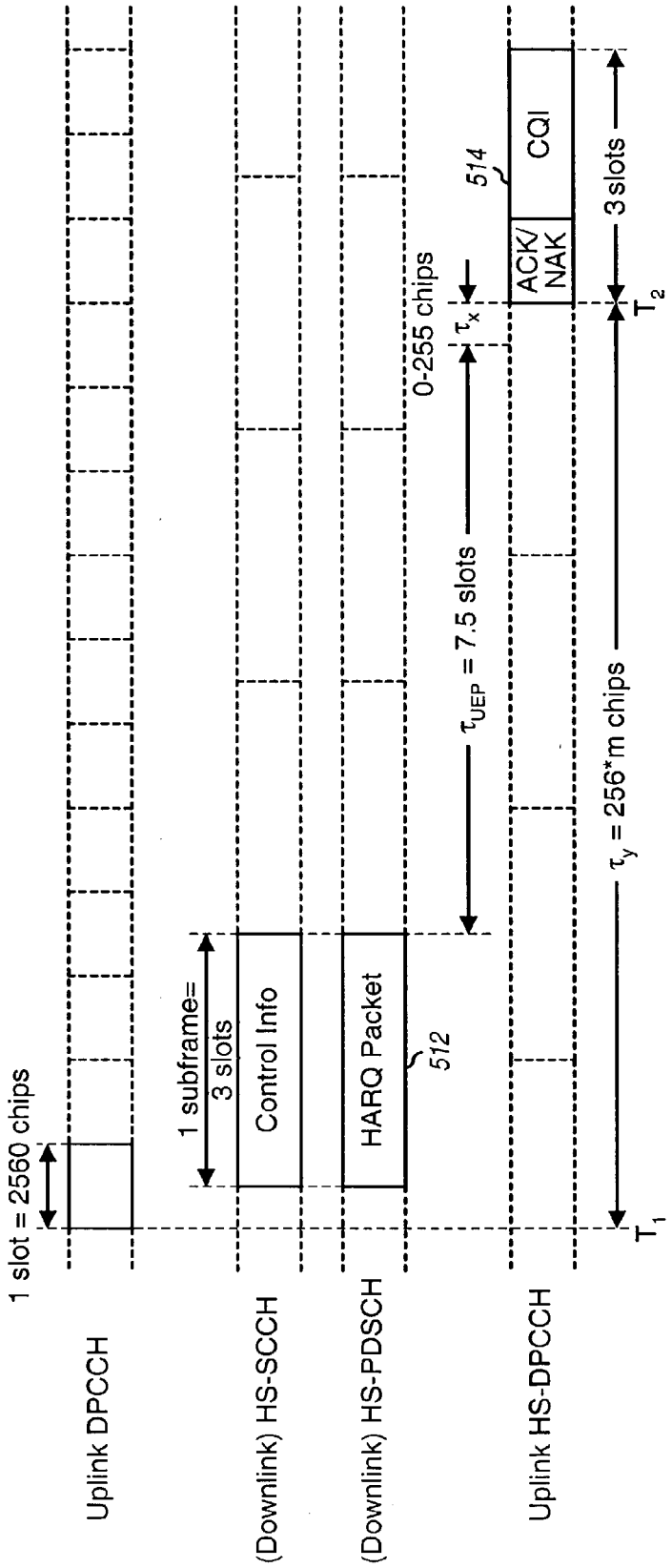
1 slot = 2560 chips
Uplink DPCCH
1 subframe=
3 slots
Control Info
(Downlink) HS-SCCH
HARQ Packet
512
(Downlink) HS-PDSCH
τ_{UEP} = 7.5 slots
0-255 chips
τ_x
514
ACK/
NAK
CQI
Uplink HS-DPCCH
T_1
T_2
τ_y = 256*m chips
3 slots

FIG. 5

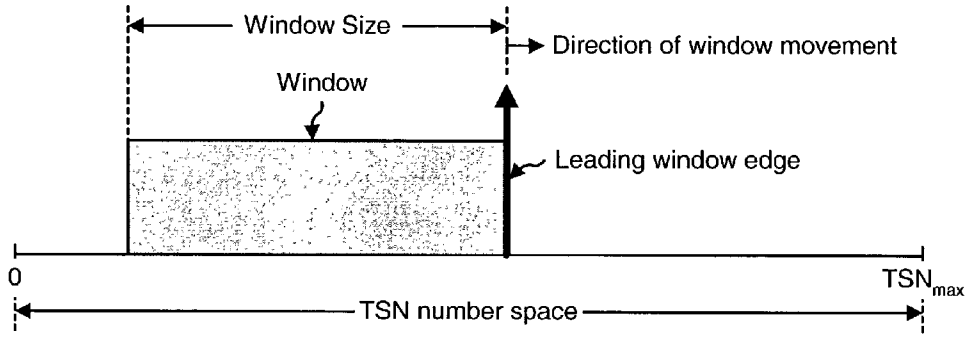
Window Size
Direction of window movement
Window
Leading window edge
0
TSN max
TSN number space

FIG. 6A

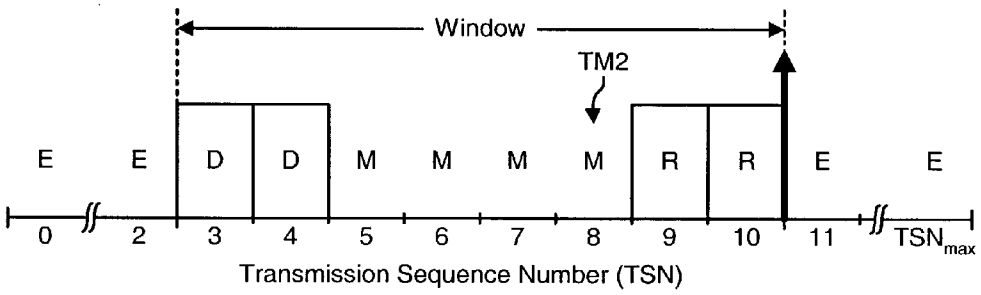
Window
TM2
E E D D M M M M R R E E
0 2 3 4 5 6 7 8 9 10 11 TSN max
Transmission Sequence Number (TSN)

FIG. 6B

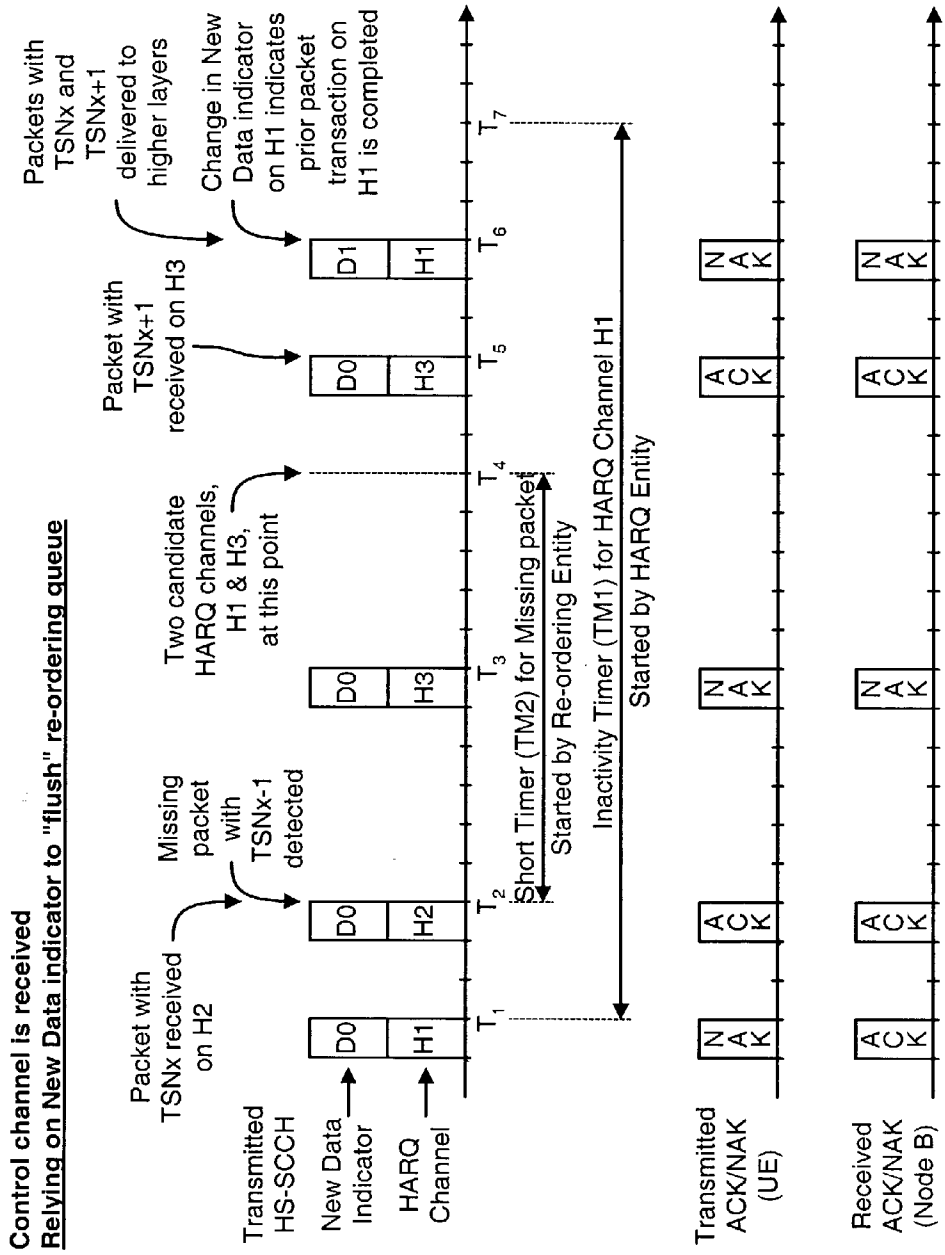
Control channel is received
Relying on New Data indicator to "flush" re-ordering queue
Packets with TSNx and TSNx+1 delivered to higher layers
Change in New Data indicator on H1 indicates prior packet transaction on H1 is completed
Packet with TSNx+1 received on H3
Two candidate HARQ channels, H1 & H3, at this point
Missing packet with TSNx-1 detected
Packet with TSNx received on H2
Transmitted HS-SCCH
New Data Indicator
HARQ Channel
D0
H1
D0
H2
D0
H3
D0
H3
D1
H1
T1
T2
T3
T4
T5
T6
T7
Short Timer (TM2) for Missing packet
Started by Re-ordering Entity
Inactivity Timer (TM1) for HARQ Channel H1
Started by HARQ Entity
Transmitted ACK/NAK (UE)
NAK
ACK
NAK
ACK
NAK
Received ACK/NAK (Node B)
ACK
ACK
NAK
NAK

FIG. 7A

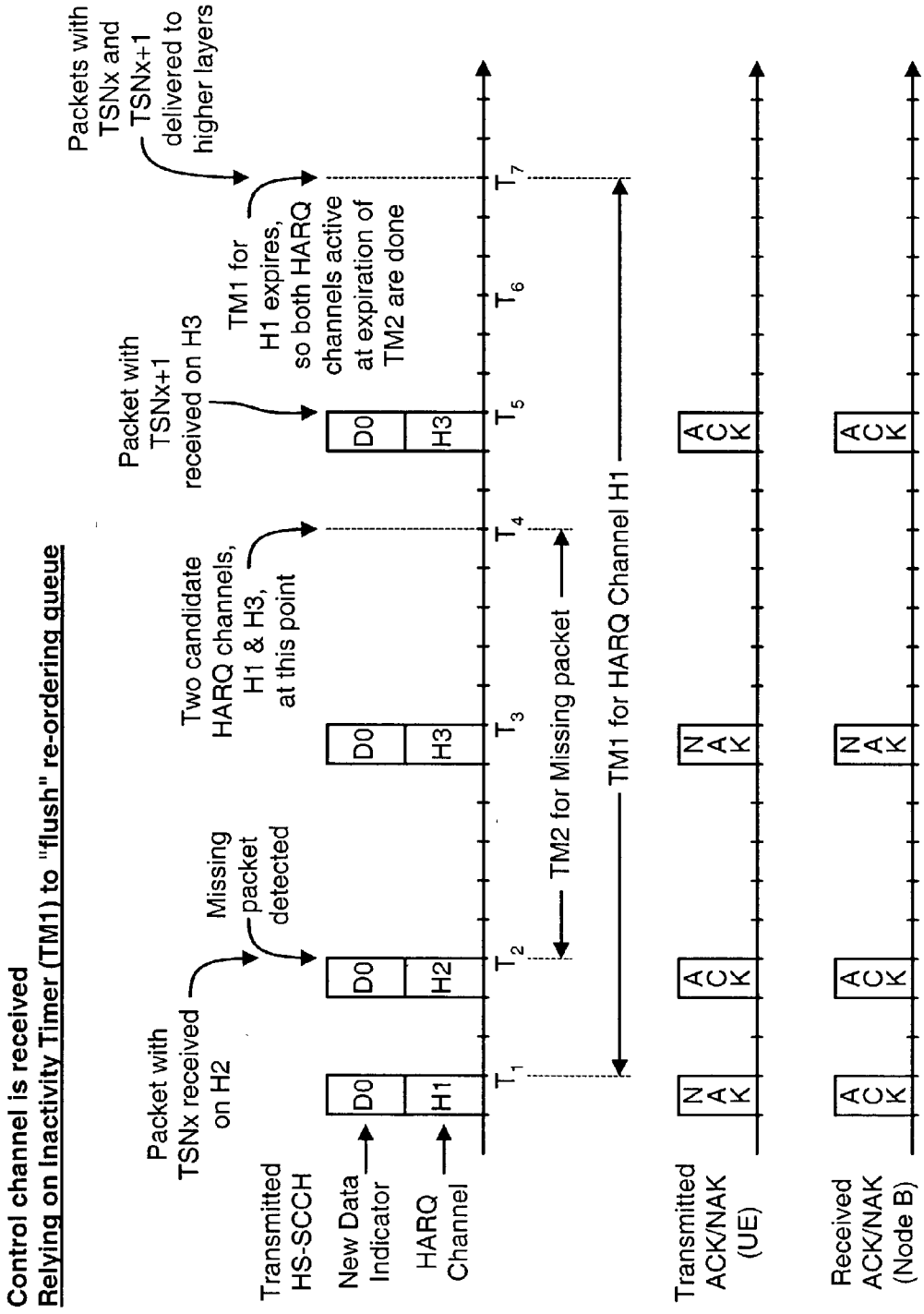
Control channel is received
Relying on Inactivity Timer (TM1) to "flush" re-ordering queue
Packets with TSNx and TSNx+1 delivered to higher layers
TM1 for H1 expires, so both HARQ channels active at expiration of TM2 are done
Packet with TSNx+1 received on H3
Two candidate HARQ channels, H1 & H3, at this point
Missing packet detected
Packet with TSNx received on H2
Transmitted HS-SCCH
New Data Indicator
HARQ Channel
D0
H1
H2
H3
T1
T2
T3
T4
T5
T6
T7
TM2 for Missing packet
TM1 for HARQ Channel H1
Transmitted ACK/NAK (UE)
Received ACK/NAK (Node B)
NAK
ACK

FIG. 7B

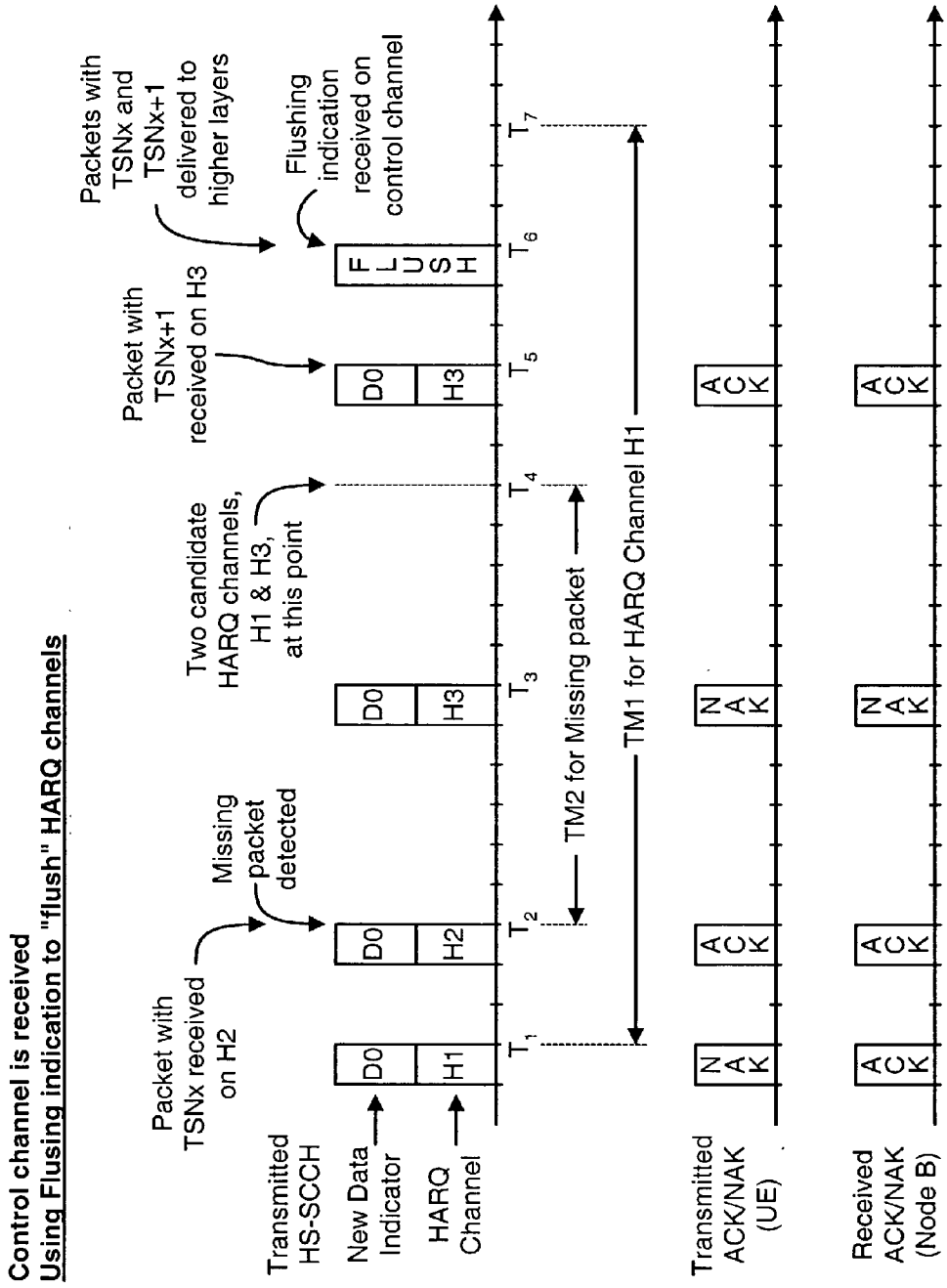
Control channel is received
Using Flusing indication to "flush" HARQ channels
Packets with TSNx and TSNx+1 delivered to higher layers
Flushing indication received on control channel
Packet with TSNx+1 received on H3
Two candidate HARQ channels, H1 & H3, at this point
Missing packet detected
Packet with TSNx received on H2
Transmitted HS-SCCH
New Data Indicator
HARQ Channel
D0
H1
H2
H3
FLUSH
T1
T2
T3
T4
T5
T6
T7
TM2 for Missing packet
TM1 for HARQ Channel H1
Transmitted ACK/NAK (UE)
Received ACK/NAK (Node B)
NAK
ACK

FIG. 7C

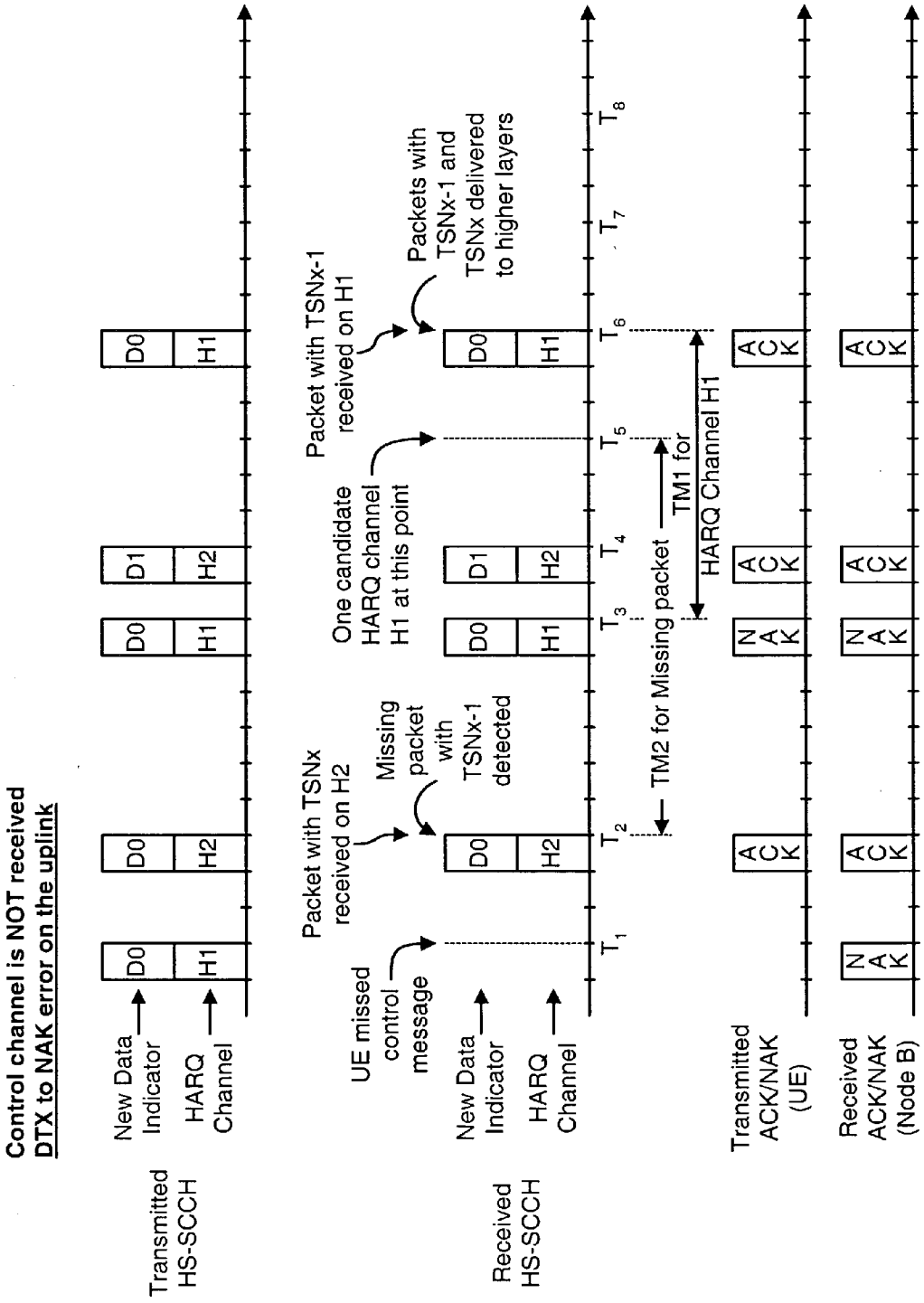
Control channel is NOT received
DTX to NAK error on the uplink
Transmitted HS-SCCH
New Data Indicator
HARQ Channel
D0
H1
D0
H2
D0
H1
D1
H2
D0
H1
Received HS-SCCH
UE missed control message
Packet with TSNx received on H2
Missing packet with TSNx-1 detected
One candidate HARQ channel H1 at this point
Packet with TSNx-1 received on H1
Packets with TSNx-1 and TSNx delivered to higher layers
T_1
T_2
T_3
T_4
T_5
T_6
T_7
T_8
TM2 for Missing packet
TM1 for HARQ Channel H1
Transmitted ACK/NAK (UE)
Received ACK/NAK (Node B)
ACK
NAK

FIG. 7D

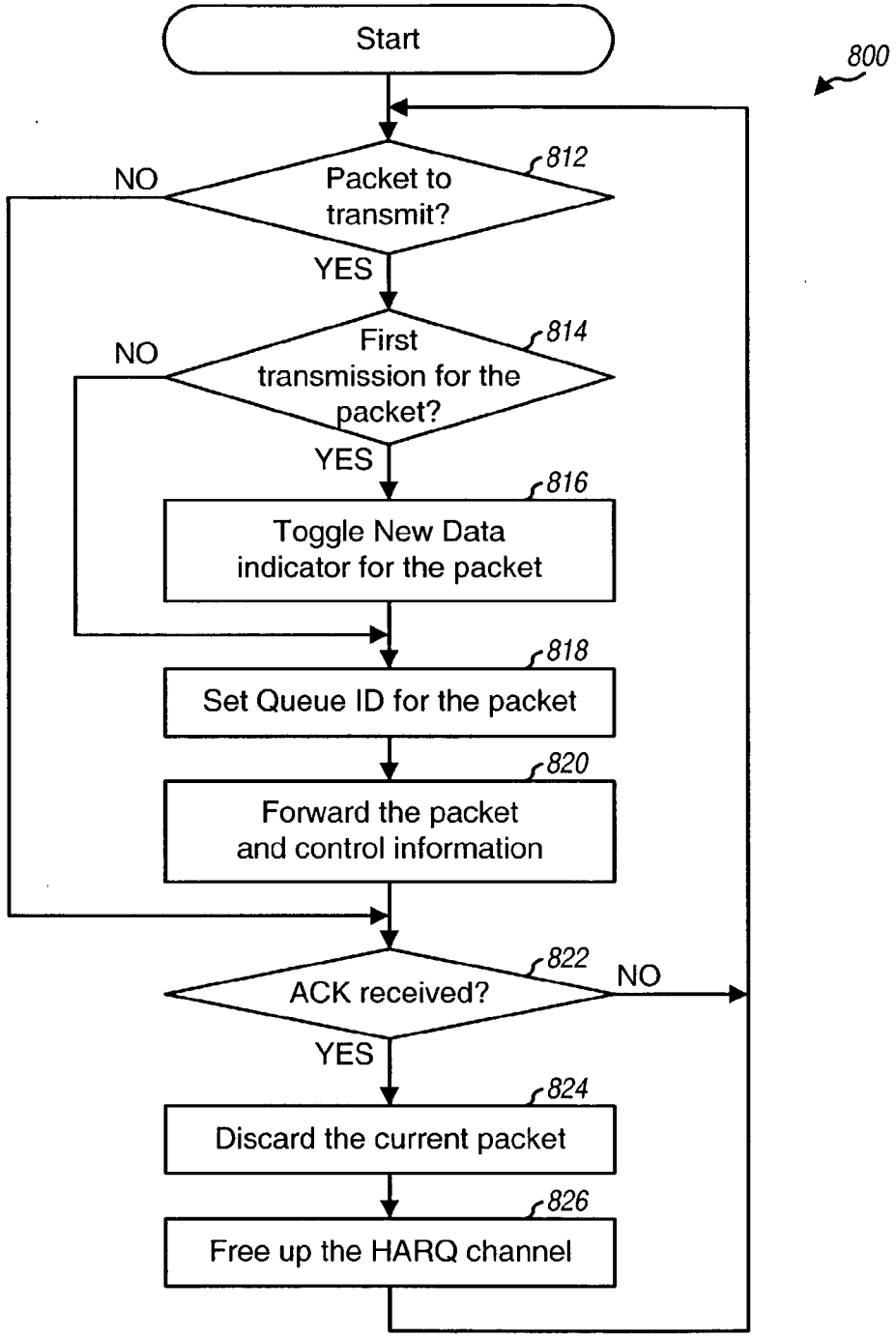
Start
800
Packet to transmit?
812
NO
YES
First transmission for the packet?
814
NO
YES
Toggle New Data indicator for the packet
816
Set Queue ID for the packet
818
Forward the packet and control information
820
ACK received?
822
NO
YES
Discard the current packet
824
Free up the HARQ channel
826

FIG. 8

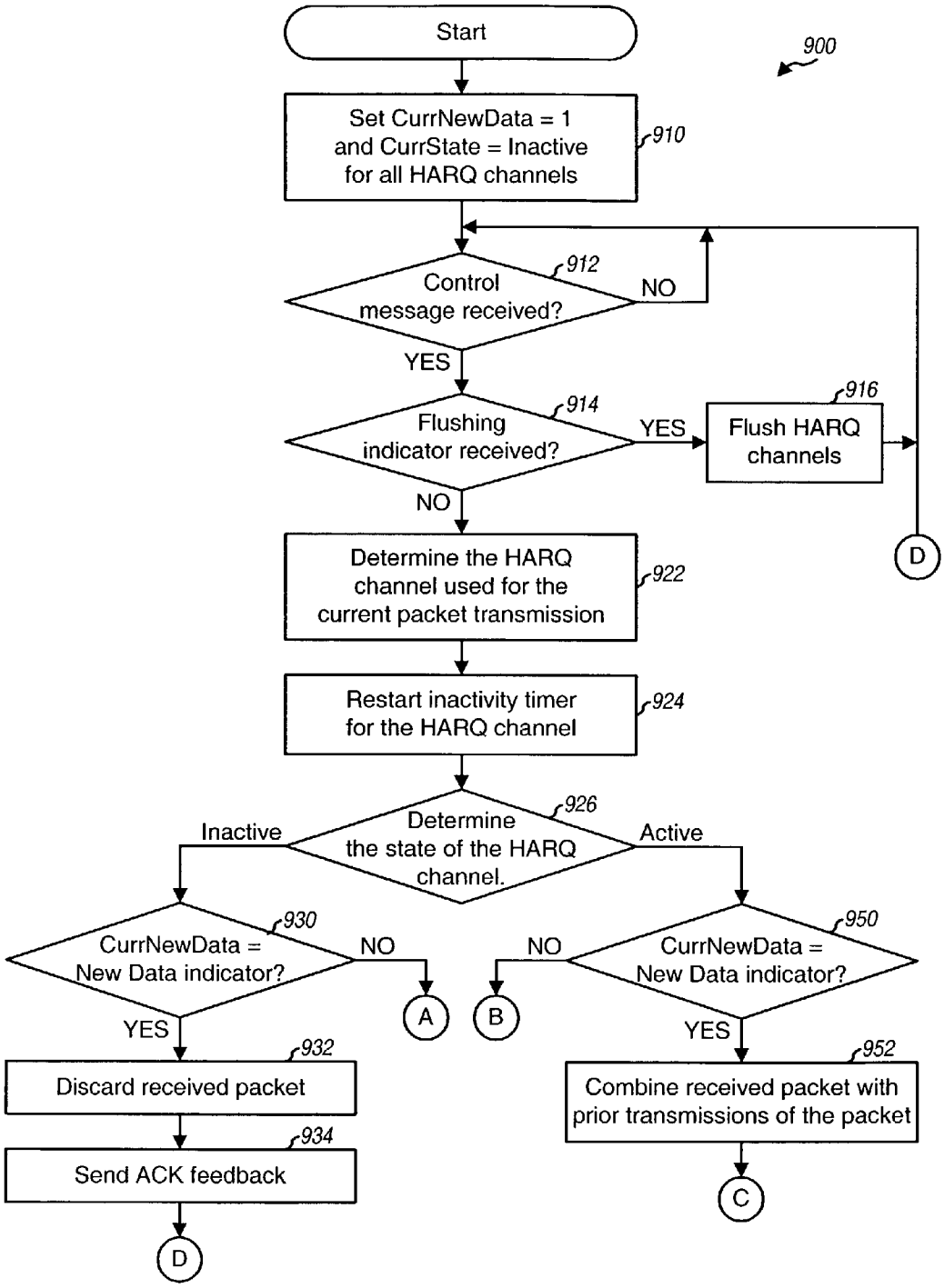
Start
900
Set CurrNewData = 1 and CurrState = Inactive for all HARQ channels
910
Control message received?
912
NO
YES
Flushing indicator received?
914
YES
Flush HARQ channels
916
NO
D
Determine the HARQ channel used for the current packet transmission
922
Restart inactivity timer for the HARQ channel
924
Determine the state of the HARQ channel.
926
Inactive
Active
CurrNewData = New Data indicator?
930
NO
A
YES
Discard received packet
932
Send ACK feedback
934
D
B
NO
CurrNewData = New Data indicator?
950
YES
Combine received packet with prior transmissions of the packet
952
C

FIG. 9A

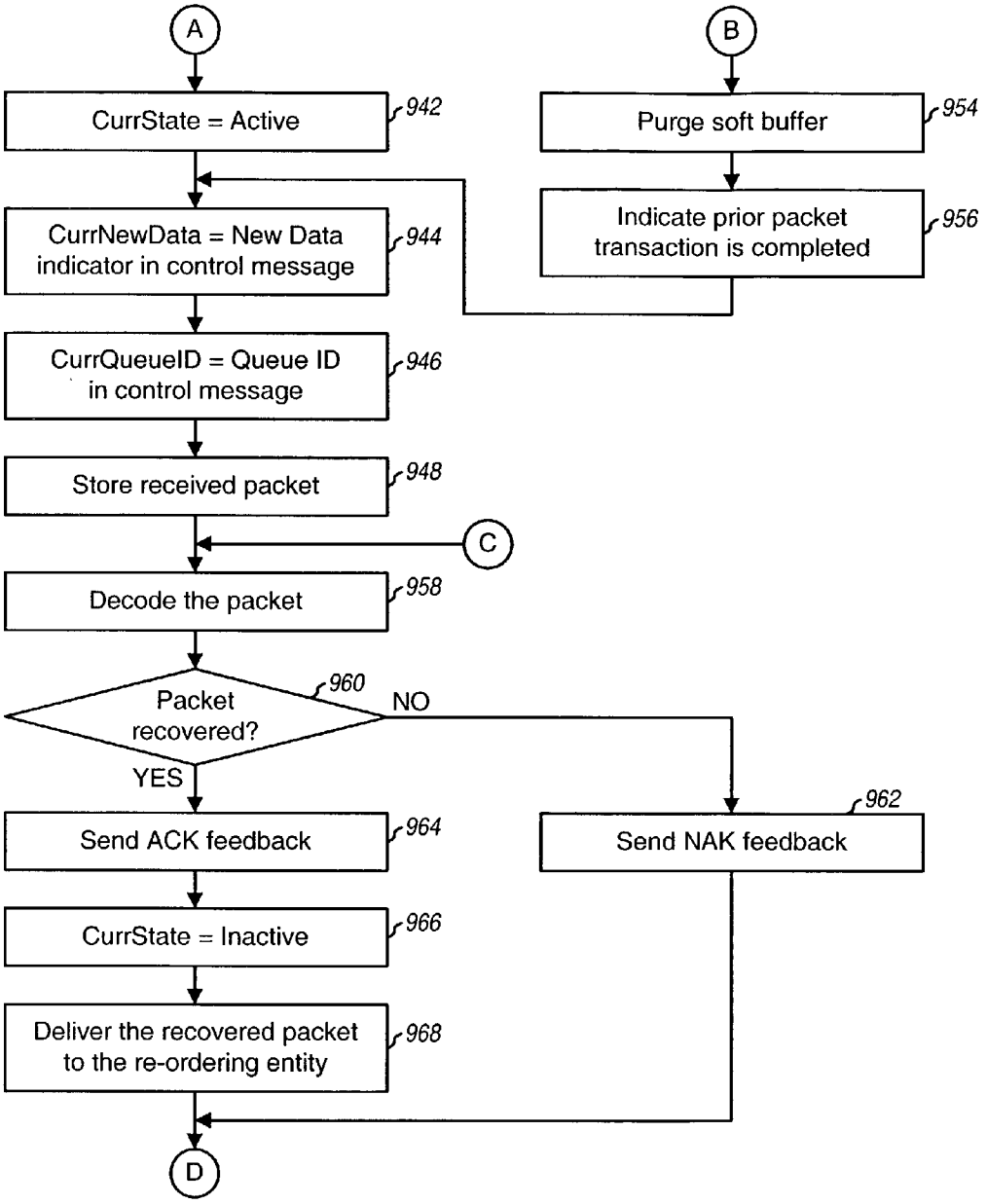
A
B
CurrState = Active
942
Purge soft buffer
954
CurrNewData = New Data indicator in control message
944
Indicate prior packet transaction is completed
956
CurrQueueID = Queue ID in control message
946
Store received packet
948
C
Decode the packet
958
Packet recovered?
960
NO
YES
Send ACK feedback
964
Send NAK feedback
962
CurrState = Inactive
966
Deliver the recovered packet to the re-ordering entity
968
D

FIG. 9B

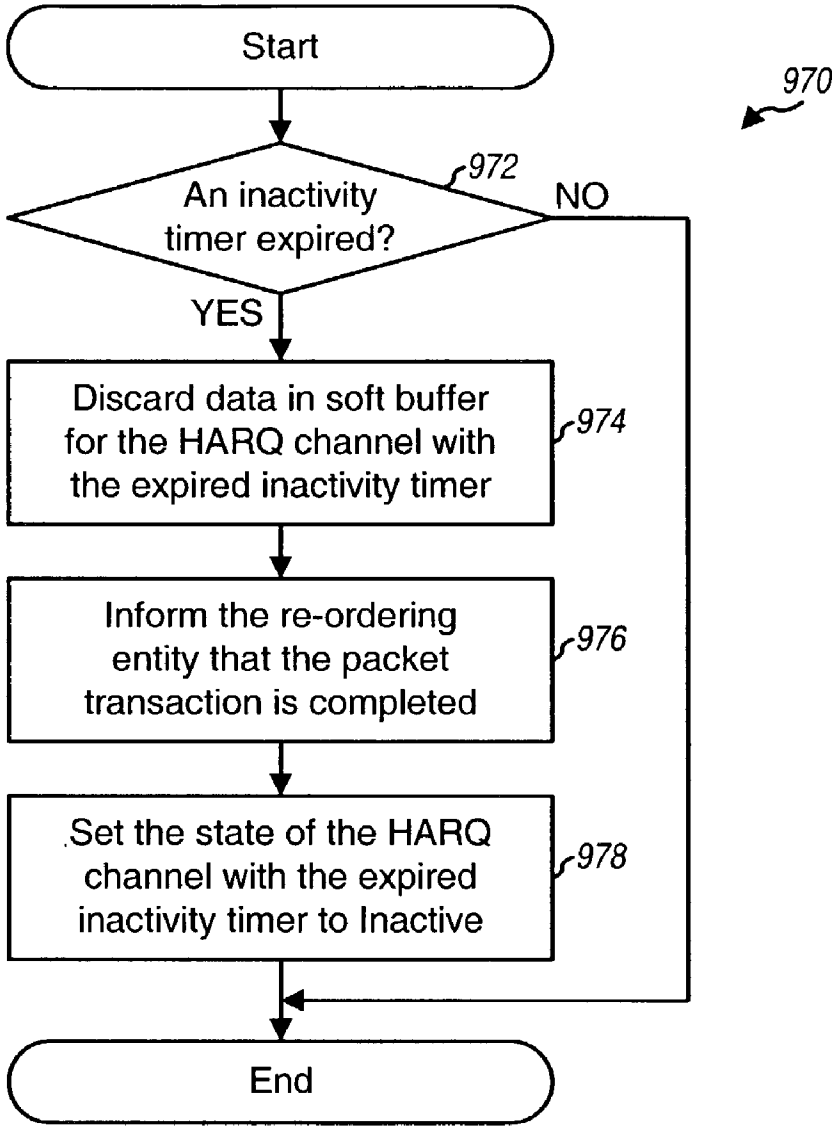
Start
970
An inactivity timer expired?
972
NO
YES
Discard data in soft buffer for the HARQ channel with the expired inactivity timer
974
Inform the re-ordering entity that the packet transaction is completed
976
Set the state of the HARQ channel with the expired inactivity timer to Inactive
978
End

FIG. 9C

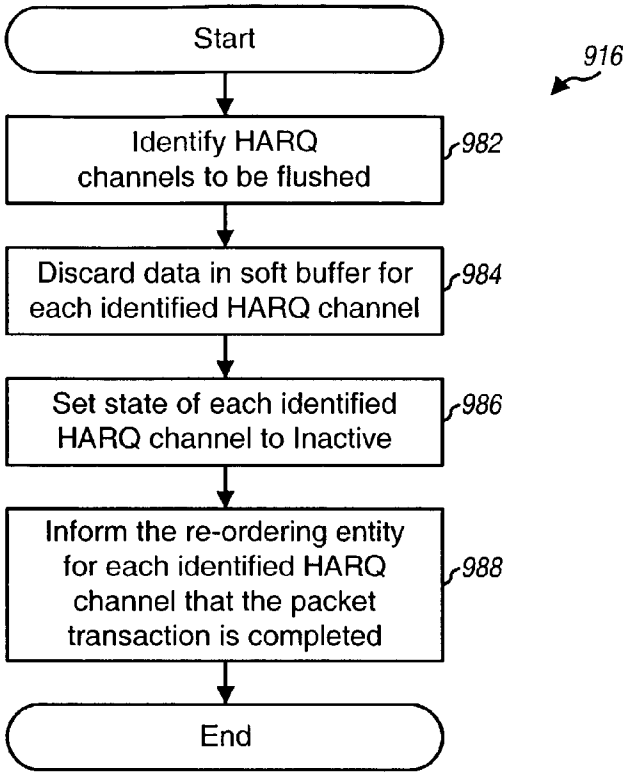
Start
916
Identify HARQ channels to be flushed
982
Discard data in soft buffer for each identified HARQ channel
984
Set state of each identified HARQ channel to Inactive
986
Inform the re-ordering entity for each identified HARQ channel that the packet transaction is completed
988
End

FIG. 9D

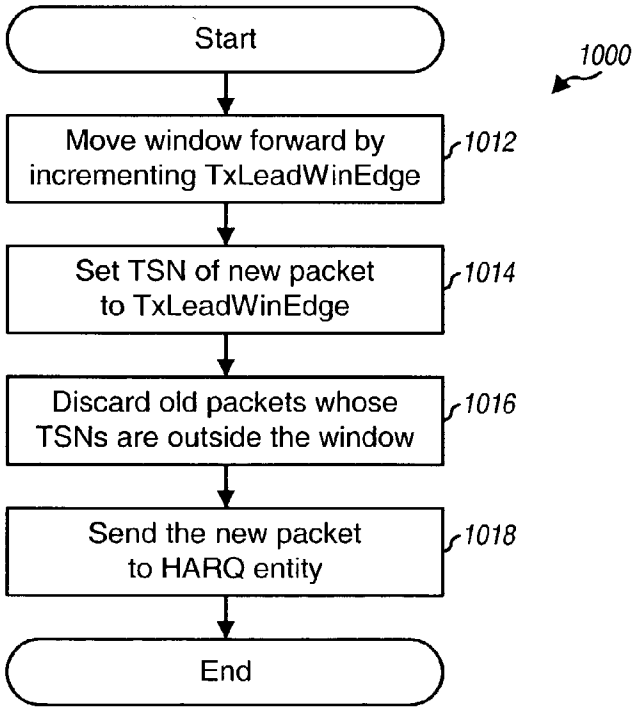
Start
1000
Move window forward by incrementing TxLeadWinEdge
1012
Set TSN of new packet to TxLeadWinEdge
1014
Discard old packets whose TSNs are outside the window
1016
Send the new packet to HARQ entity
1018
End

FIG. 10

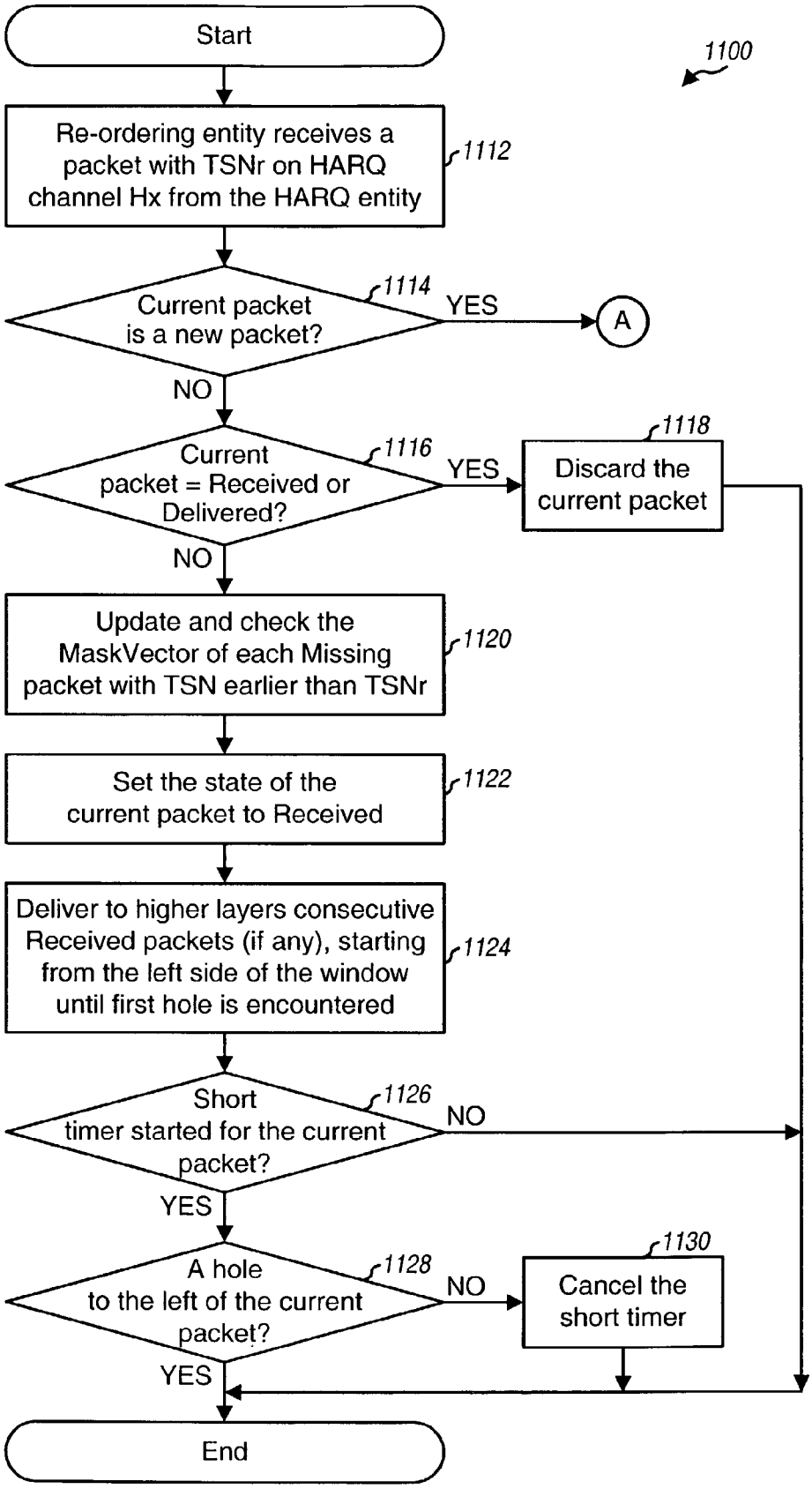
Start
1100
Re-ordering entity receives a packet with TSNr on HARQ channel Hx from the HARQ entity
1112
Current packet is a new packet?
1114
YES
A
NO
Current packet = Received or Delivered?
1116
YES
Discard the current packet
1118
NO
Update and check the MaskVector of each Missing packet with TSN earlier than TSNr
1120
Set the state of the current packet to Received
1122
Deliver to higher layers consecutive Received packets (if any), starting from the left side of the window until first hole is encountered
1124
Short timer started for the current packet?
1126
NO
YES
A hole to the left of the current packet?
1128
NO
Cancel the short timer
1130
YES
End

FIG. 11A

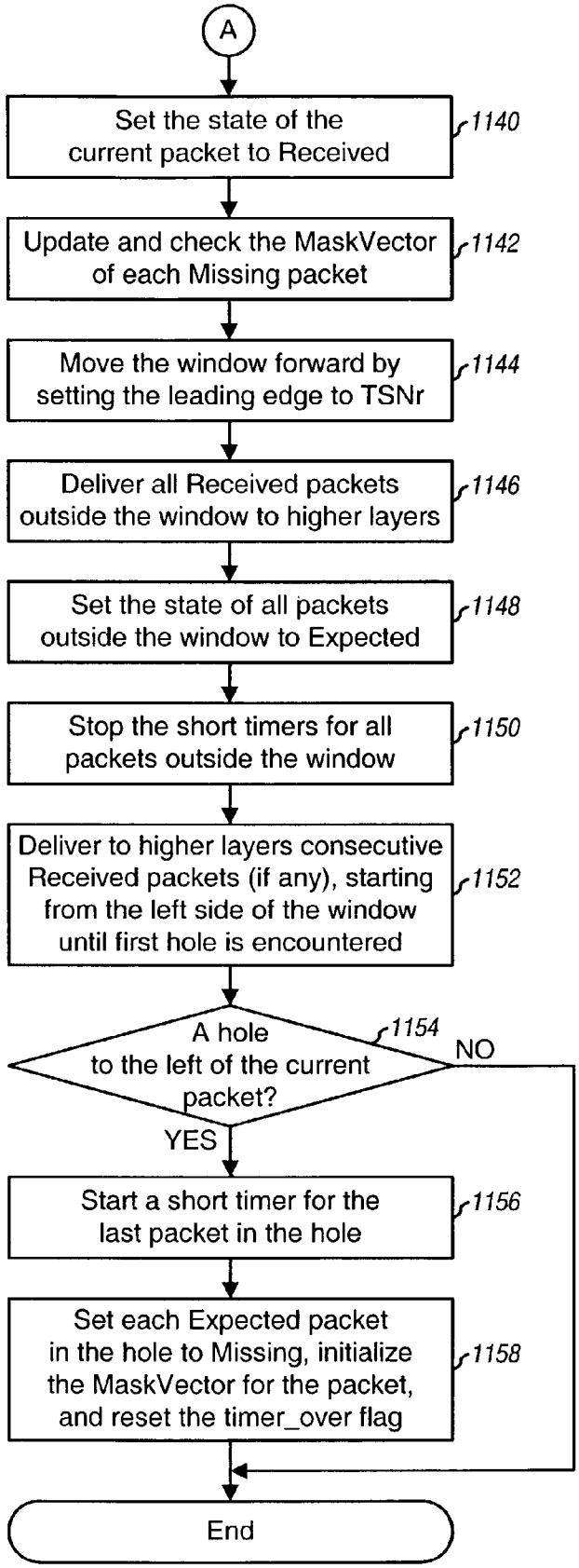
A
Set the state of the current packet to Received
1140
Update and check the MaskVector of each Missing packet
1142
Move the window forward by setting the leading edge to TSNr
1144
Deliver all Received packets outside the window to higher layers
1146
Set the state of all packets outside the window to Expected
1148
Stop the short timers for all packets outside the window
1150
Deliver to higher layers consecutive Received packets (if any), starting from the left side of the window until first hole is encountered
1152
A hole to the left of the current packet?
1154
NO
YES
Start a short timer for the last packet in the hole
1156
Set each Expected packet in the hole to Missing, initialize the MaskVector for the packet, and reset the timer_over flag
1158
End

FIG. 11B

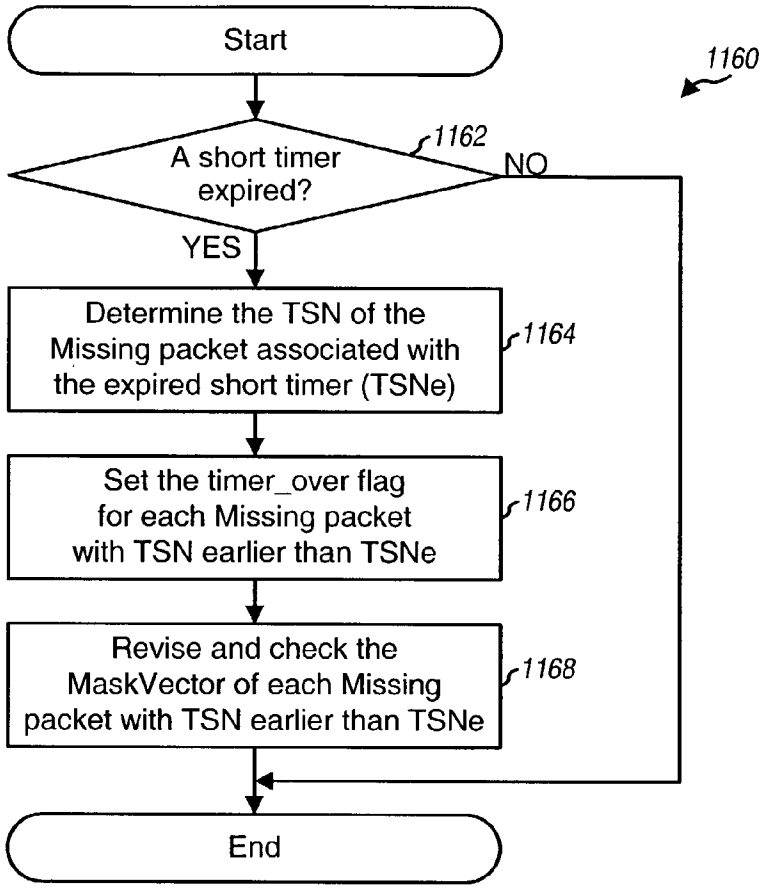

FIG. 11C

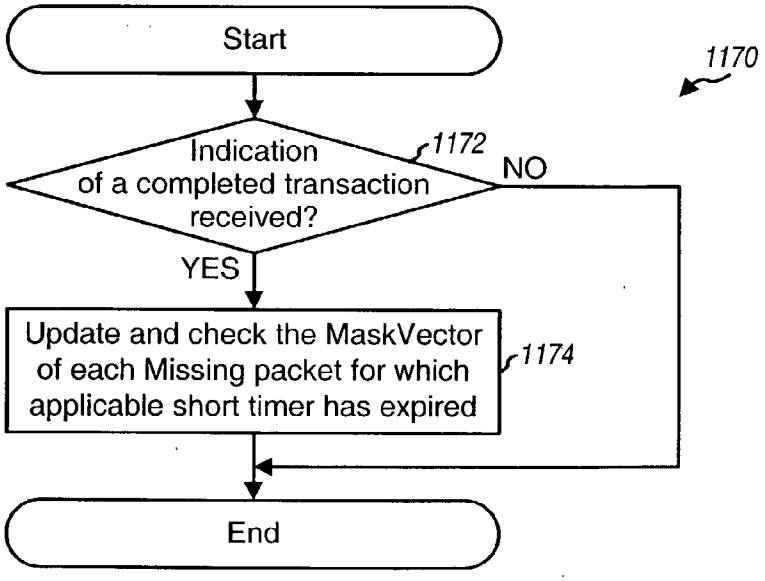

FIG. 11D

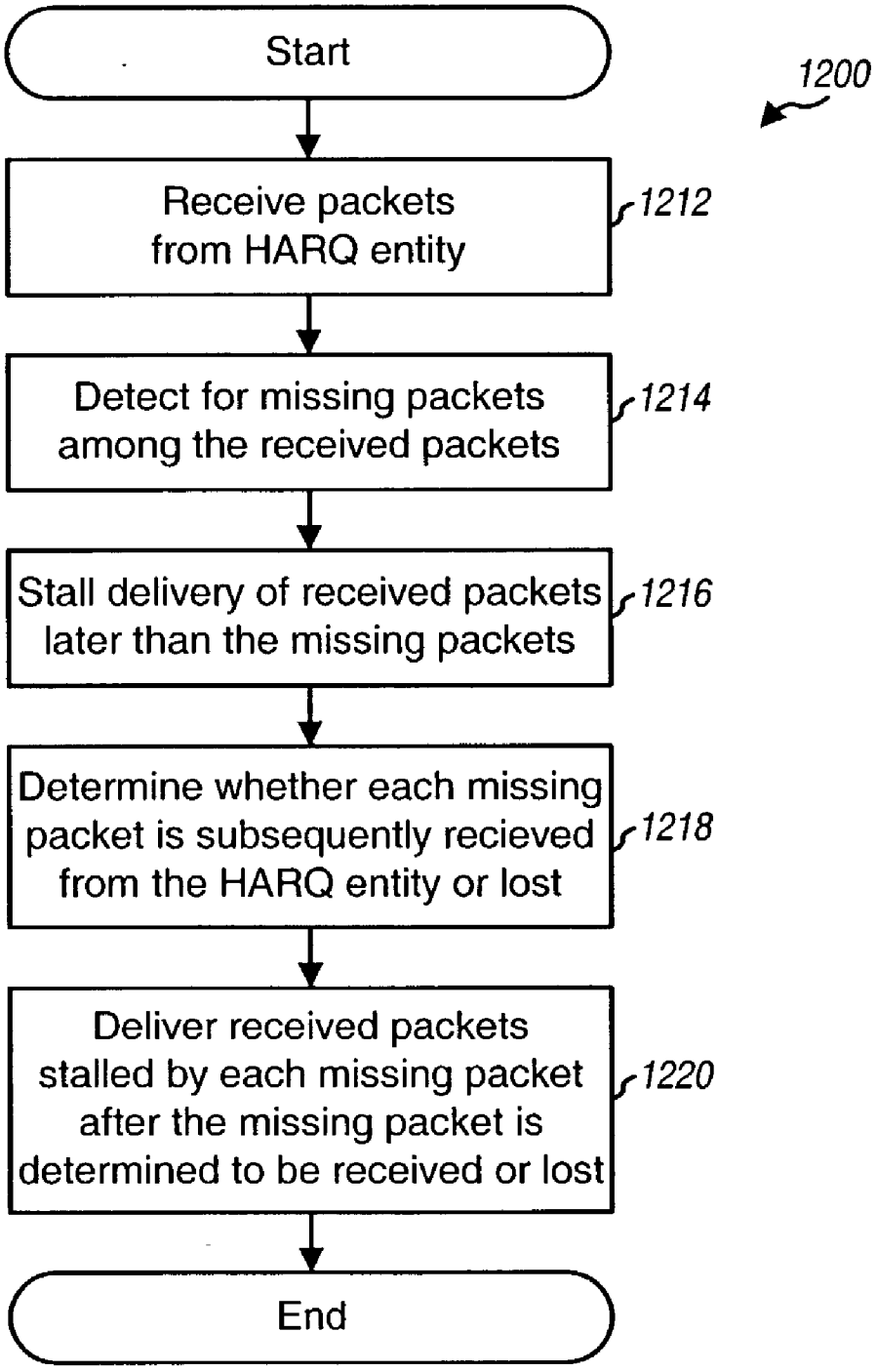
Start
1200
Receive packets from HARQ entity
1212
Detect for missing packets among the received packets
1214
Stall delivery of received packets later than the missing packets
1216
Determine whether each missing packet is subsequently recieved from the HARQ entity or lost
1218
Deliver received packets stalled by each missing packet after the missing packet is determined to be received or lost
1220
End

FIG. 12

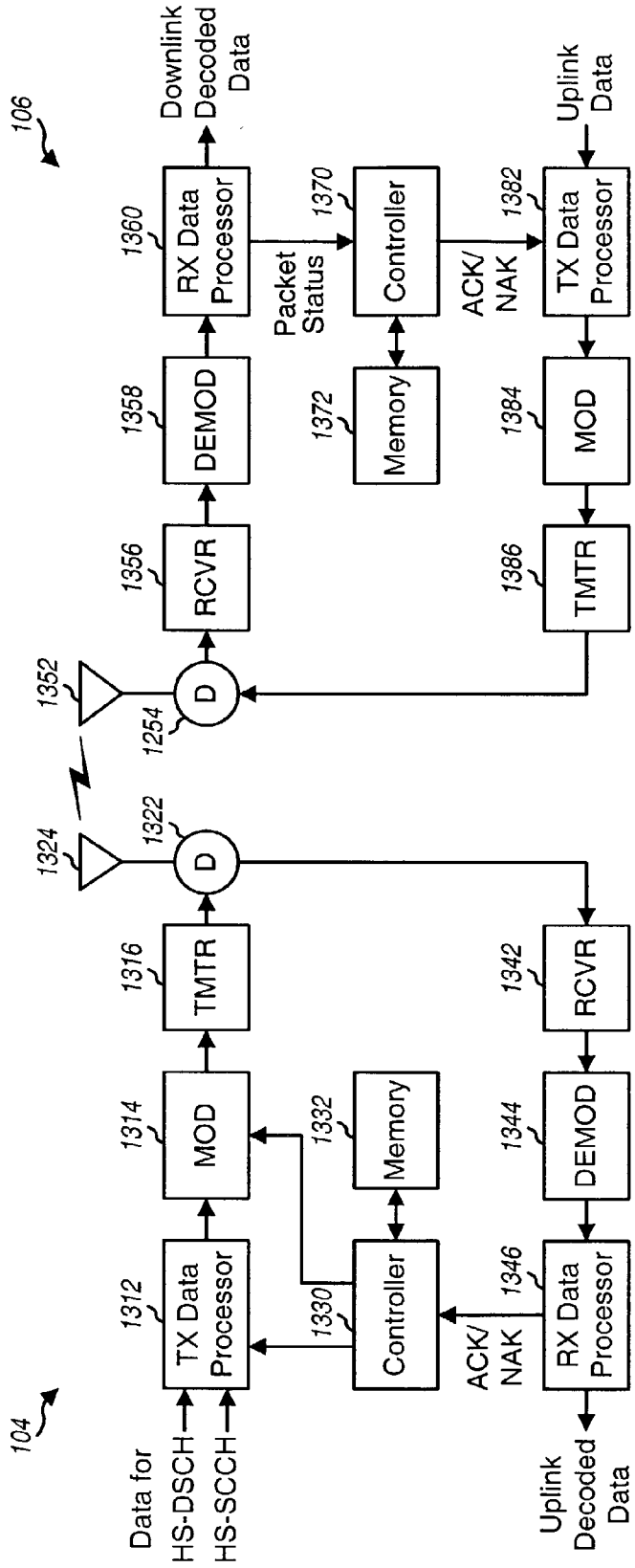
104
106
Data for
HS-DSCH
HS-SCCH
1312
TX Data Processor
1314
MOD
1316
TMTR
1324
1322
D
1330
Controller
1332
Memory
1342
RCVR
1344
DEMOD
1346
RX Data Processor
ACK/
NAK
Uplink
Decoded
Data
1352
1254
D
1356
RCVR
1358
DEMOD
1360
RX Data Processor
Downlink
Decoded
Data
Packet
Status
1370
Controller
1372
Memory
ACK/
NAK
1382
TX Data Processor
1384
MOD
1386
TMTR
Uplink
Data

FIG. 13

DATA DELIVERY IN CONJUNCTION WITH A HYBRID AUTOMATIC RETRANSMISSION MECHANISM IN CDMA COMMUNICATION SYSTEMS

[0001] This application claims the benefit of provisional U.S. Application Serial No. 60/380,408, entitled "A Method and Apparatus for Stall Avoidance in a Communication System," filed May 13, 2002, which is incorporated herein by reference in its entirety for all purposes.

BACKGROUND

[0002] 1. Field

[0003] The present invention relates generally to data communication, and more specifically to techniques for improving the performance of data delivery to higher layers in conjunction with a hybrid automatic retransmission (HARQ) mechanism in CDMA communication systems.

[0004] 2. Background

[0005] Wireless communication systems are widely deployed to provide various types of services such as voice, packet data, and so on. These systems may be multiple-access systems capable of supporting communication by multiple users, and may be based on code division multiple access (CDMA), time division multiple access (TDMA), frequency division multiple access (FDMA), or some other multiple access techniques. CDMA systems may provide certain advantages over other types of system, including increased system capacity.

[0006] To improve the reliability of data transmission, some newer-generation CDMA systems employ a hybrid automatic retransmission (HARQ) mechanism that can retransmit packets that have been incorrectly decoded by the receiver. For example, in W-CDMA Release 5, the HARQ is included in a Medium Access Control (MAC)-hs sublayer that resides on top of the physical layer. On the downlink, an HARQ entity at the transmitter processes data into packets that are assigned sequential transmission sequence numbers (TSNs). These packets may then be transmitted in sequential order based on their TSNs to the receiver.

[0007] At the receiver, a corresponding HARQ entity receives the packet transmissions and attempts to decode and recover each transmitted packet. However, due to degradation in the packet transmissions resulting from the radio link, some of the packets may not be decoded correctly (i.e., erased). When this occurs, a negative acknowledgment (NAK) is sent from the receiver back to the transmitter to initiate a retransmission of each erased packet.

[0008] The receiver HARQ entity is also tasked with providing the recovered packets (i.e., those decoded correctly) to higher layers. In W-CDMA, the higher layers expect data in the proper order, as determined by the TSNs of the packets. However, with the HARQ mechanism, packets may be recovered out-of-order by the receiver HARQ entity due to retransmissions. As a result, a re-ordering entity is used at the receiver to buffer and re-order the packets as they are recovered by the receiver HARQ. The re-ordering entity would then provide the packets in the proper order, as they become available, to higher layers.

[0009] If packets are recovered out of order by the receiver HARQ entity, then the re-ordering entity may "stall" or delay its delivery of the recovered packets to higher layers. In particular, the re-ordering entity would stall the delivery of data to higher layers whenever packets are detected to be missing, until either (1) the missing packets are recovered by the receiver HARQ or (2) the re-ordering entity is confident that the missing packets are lost and will not be recovered by the receiver HARQ. If the second condition is true, then another retransmission mechanism at higher layers may be relied upon to retransmit the lost data.

[0010] A challenge arises in determining the proper amount of time to wait by the re-ordering entity before declaring that the missing packets are lost and providing the already recovered packets to higher layers. One goal is to avoid stalling the delivery of data to higher layers, since waiting a long time or indefinitely for lost packets that will not be recovered is undesirable. A short wait time would be better for this goal. A conflicting goal is to minimize erroneous declarations of lost packets, so that unnecessary retransmissions with long delays by higher layers (if supported) or packet loss (if no retransmissions are performed by higher layers) are minimized. A long wait time would provide better assurance that the packets are indeed lost. This problem is commonly referred to in the art as "stall avoidance".

[0011] There is therefore a need in the art for techniques to improve the performance of stall avoidance in a CDMA system.

SUMMARY

[0012] Techniques are provided herein to mitigate the effects of missing packets and improve stall avoidance performance. In particular, these techniques may be used to more effectively deal with situations in which the delivery of data to higher layers is stalled because of missing payloads. These techniques make use of information available from the HARQ processes in order to better decide whether or not to deliver data to higher layers.

[0013] Various mechanisms are provided herein that may be used singly or in combination to improve stall avoidance performance. These mechanisms include (1) transmission of the priority of each packet on a control channel instead of with the packet, (2) maintenance of an inactivity timer for each HARQ channel, (3) transmission of a flushing indication to "flush" one or more HARQ channels, which may in turn result in data being flushed by the re-ordering entity to higher layers, (4) formation of a set of candidate HARQ channels for each missing packet, which are channels that may be used for the missing packet, (5) determination of whether or not a missing packet is lost based on activity or inactivity detected on the HARQ channels in the candidate set. These mechanisms are described in further detail below.

[0014] In an embodiment, a method is provided for delivering data recovered by an HARQ entity in proper order to higher layers in a CDMA communication system. In accordance with the method, packets are received from the HARQ entity by the re-ordering entity and missing packets among the received packets are detected. Packets may be transmitted in a sequential order based on transmission sequence numbers (TSNs) assigned to the packets, and missing packets may be detected based on the TSNs of the received packets. Delivery of received packets later than the missing packets is stalled because higher layers expect data in-order.

A determination is thereafter made whether each missing packet is (1) subsequently received from the HARQ entity or (2) lost, by successively eliminating HARQ channels that may be used to send the missing packet. Received packets previously stalled by each missing packet are delivered after the missing packet is determined to be lost or received.

[0015] A set of candidate HARQ channels may be formed for each missing packet. The candidate set may include, for example, all HARQ channels that are active at (or a short time after) the time the packet is detected to be missing. An HARQ channel may be eliminated from the set if (1) it is inactive for a particular period of time, (2) a packet is recovered from the HARQ channel, (3) a new packet is detected to be sent on the HARQ channel, or (4) an indication to flush the HARQ channel is received. An inactivity timer may be used for each HARQ channel to determine whether or not the channel is inactive, and may be restarted whenever a packet transmission is received on the channel.

[0016] These techniques may be used for various CDMA systems such as a W-CDMA system that implements Release 5 or later.

[0017] Various aspects and embodiments of the invention are described in further detail below. The invention further provides methods, program codes, digital signal processors, receiver units, transmitter units, terminals, base stations, systems, and other apparatuses and elements that implement various aspects, embodiments, and features of the invention, as described in further detail below.

BRIEF DESCRIPTION OF THE DRAWINGS

[0018] The features, nature, and advantages of the present invention will become more apparent from the detailed description set forth below when taken in conjunction with the drawings in which like reference characters identify correspondingly throughout and wherein:

[0019] **FIG. 1** is a diagram of a CDMA communication system;

[0020] **FIG. 2** is a diagram of a layer structure defined by W-CDMA Release 5;

[0021] **FIG. 3** is a diagram illustrating the data encapsulation performed by a Node B for transmission on the HS-DSCH for high-speed data packet access (HSDPA);

[0022] **FIGS. 4A and 4B** are diagrams of a MAC-hs entity defined by W-CDMA Release 5 for the UTRAN side and the UE side, respectively;

[0023] **FIG. 5** is a diagram illustrating the timing relationship between various downlink and uplink physical channels used to implement HSDPA;

[0024] **FIGS. 6A and 6B** are diagrams graphically illustrating a window maintained for a particular priority queue and a window maintained by the receiver re-ordering entity, respectively;

[0025] **FIGS. 7A through 7D** illustrate four data transmission scenarios whereby various mechanisms are relied on to flush data from the re-ordering queue to higher layers;

[0026] **FIG. 8** is a flow diagram of a process performed by the transmitter HARQ entity to send a packet on a particular HARQ channel;

[0027] **FIGS. 9A and 9B** show a flow diagram of a process performed by the receiver HARQ entity to receive a packet on a particular HARQ channel;

[0028] **FIG. 9C** is a flow diagram of a process performed by the receiver HARQ entity to maintain all of the inactivity timers for the HARQ channels;

[0029] **FIG. 9D** is a flow diagram of a process performed by the receiver HARQ entity upon receiving a flushing indication on a control message;

[0030] **FIG. 10** is a flow diagram of a process performed by the transmitter re-ordering entity for a particular priority queue;

[0031] **FIGS. 11A and 11B** show a flow diagram of a process performed by the receiver re-ordering entity for a particular priority queue;

[0032] **FIG. 12** shows a flow diagram of an overall process performed by the receiver re-ordering entity to receive packets from the HARQ entity and deliver packets to higher layers; and

[0033] **FIG. 13** is a block diagram of an embodiment of a Node B and a UE.

DETAILED DESCRIPTION

[0034] **FIG. 1** is a diagram of a CDMA communication system **100** that may implement the techniques described herein for improving stall avoidance. System **100** includes a number of base stations **104** that communicate with a number of terminals **106** (only one base station and two terminals are shown in **FIG. 1** for simplicity). A base station is also referred to as a Node B, a base transceiver system (BTS), an access point, or some other terminology. The base stations may be part of a UMTS Radio Access Network (UTRAN). A base station and/or its coverage area are also often referred to as a cell, depending on the context in which the term is used.

[0035] A terminal is also referred to as a user equipment (UE), a mobile station, a remote station, an access terminal, or some other terminology. Each terminal may communicate with one or more base stations on the downlink and/or uplink at any given moment, depending on whether or not the terminal is active, whether or not soft handover is supported for the data transmission, and whether or not the terminal is in soft handover. The downlink (i.e., forward link) refers to transmission from the base station to the terminal, and the uplink (i.e., reverse link) refers to transmission from the terminal to the base station.

[0036] The techniques described herein for improving stall avoidance performance may be implemented in various CDMA communication systems. Thus, CDMA system **100** may implement one or more commonly known CDMA standards such as W-CDMA, cdma2000, IS-856, IS-95, and others. For clarity, various aspects, embodiments, and implementation details for improving stall avoidance performance are described below for a CDMA system that supports W-CDMA Release 5. Using W-CDMA terminology, the base station, terminal, and system controller are respectively referred to as Node B, UE, and RNC in the following description.

[0037] W-CDMA supports various types of services such as voice, packet data, and so on. In W-CDMA, data to be

transmitted to a particular UE is processed as belonging to one or more transport channels. These transport channels are then mapped to one or more physical channels (at the physical layer) assigned to the UE. A physical channel is defined by various parameters (e.g., carrier frequency, scrambling code, channelization code(s), and so on).

[**0038**] W-CDMA Release 5 further supports high-speed downlink packet access (HSDPA), which is a set of transport/physical channels and procedures defined as part of the UTRAN that enable high-speed transmission of data on the downlink. For HSDPA, data is processed in blocks that are then multiplexed onto a high-speed downlink shared channel (HS-DSCH), which is a downlink transport channel. The HS-DSCH is then mapped to a high-speed physical downlink shared channel (HS-PDSCH) that may be shared by multiple UEs. For W-CDMA, each packet transmission on the HS-PDSCH spans a 2 msec time interval that is referred to as a transmission time interval (TTI).

[**0039**] The following transport and physical channels defined by W-CDMA are referred to herein:

[**0040**] DPCH—dedicated physical channel

[**0041**] HS-DSCH—high-speed downlink shared channel

[**0042**] HS-SCCH—shared control physical channel for the HS-DSCH

[**0043**] HS-PDSCH—high-speed physical downlink shared channel

[**0044**] HS-DPCCH—high-speed dedicated physical control channel (on the uplink)

[**0045**] The HS-PDSCH may be used to transmit data in a time and code division multiplexed (TDM/CDM) manner for multiple UEs. The control information for the HS-PDSCH, which includes various parameters used to properly receive the HS-PDSCH, is transmitted on an associated HS-SCCH. The HS-DPCCH is used to carry feedback from the UEs to report correctly and incorrectly received (i.e., erased) packets.

[**0046**] **FIG. 2** is a diagram of a layer structure **200** defined by W-CDMA Release 5. Layer structure **200** includes a Radio Link Control (RLC) layer **210**, a Medium Access Control (MAC) layer **220**, and a physical layer **230**. The RLC layer performs automatic retransmission (ARQ) of data and typically resides at the Radio Network Controller (RNC). Retransmission via the RLC layer is typically associated with long delays because of the long round trip time between the RNC and UE. In the RLC layer, data is processed as belonging to logical channels.

[**0047**] For W-CDMA Release 5, the MAC layer is further partitioned onto a MAC-d sublayer **222** and a MAC-hs sublayer **224**. The MAC-d sublayer performs a set of functions that includes (1) mapping logical channels to common and dedicated transport channels, (2) multiplexing one or more logical channels onto one transport channel (C/T MUX), (3) ciphering/deciphering, and so on. The MAC-d sublayer provides data flows to the MAC-hs sublayer, with each data flow being associated with certain scheduling attributes.

[**0048**] The MAC-hs sublayer performs specific functions related to HSDPA, as described below. The MAC-hs sublayer further provides the interface between the MAC-h sublayer and the physical layer.

[**0049**] The physical layer provides the mechanism for transmitting data for the MAC layer and signaling for higher layers.

[**0050**] These various layers and sublayers for W-CDMA are described in various standard documents, which are publicly available.

[**0051**] **FIG. 3** is a diagram illustrating the data encapsulation performed by a Node B for transmission on the HS-DSCH. In W-CDMA, data to be transmitted on the downlink is provided by the RLC layer in RLC protocol data units (RLC PDUs), each of which includes a sequence number (SN) and data. The MAC-d sublayer receives the RLC PDUs for one or more logical channels and, for each RLC PDU, inserts a (C/T) field to form a corresponding MAC-d PDU. The C/T field identifies the logical channel associated with the RLC PDU.

[**0052**] The MAC-hs sublayer receives the MAC-d PDUs and forms MAC-hs PDUs. For W-CDMA Release 5, each MAC-d flow may include data for one or more logical channels at the RLC layer, and each MAC-d PDU may be associated with a particular priority. Since data is transmitted based on priority and available resources, data with different priorities is stored in different priority queues within the MAC-hs sublayer. Thereafter, data is retrieved from the proper priority queue, as needed, and further processed for transmission on the HS-DSCH.

[**0053**] To form a MAC-hs PDU, the MAC-hs sublayer first receives and serially concatenates one or more MAC-d PDUs from a particular priority queue to form the payload for the MAC-hs PDU. Padding bits may be added as necessary to fill out the payload. The MAC-hs sublayer then adds a header with the payload to form the MAC-hs PDU.

[**0054**] For W-CDMA Release 5, the MAC-hs header includes (1) a size index ID (SID) field indicative of the length of each MAC-d PDU in the MAC-hs PDU, (2) an N field indicative of the number of MAC-d PDUs included in the MAC-hs PDU, (3) a transmission sequence number (TSN) assigned to and used to uniquely identify the MAC-hs PDU, and (4) a Queue ID (QID) field indicative of the specific priority queue from which the MAC-d PDUs included in the MAC-hs PDU were retrieved. The TSN allows the UE to identify MAC-hs PDUs that have been recovered and is used to provide MAC-d PDUs in-order to the RLC layer, which expects data to be delivered to it in the correct sequence. A mechanism is also provided by W-CDMA to allow for the transmission of MAC-hs PDUs of different sizes within the same packet, but this is not described herein for simplicity.

[**0055**] MAC-hs PDUs are generated on the fly as they are needed. Each MAC-hs PDU is transmitted in a 2 msec TTI, which is the transmission unit on the HS-DSCH. For simplicity, a MAC-hs PDU is referred to herein as a "packet".

[**0056**] Control information is concurrently transmitted on the shared HS-SCCH along with each packet transmission. This control information includes (1) an HARQ process ID (HID), (2) a New Data indicator, (3) information identifying the specific UE to which the control information and the corresponding data transmission are intended, and (4) other

information not described herein. The HID indicates the specific HARQ process used for the packet. Each packet may be transmitted and possibly retransmitted one or more times until (1) the UTRAN receives an ACK feedback on the HS-DPCCH for the packet, or (2) the transmitter decides to abandon the transmission of the packet. Each packet is associated with a specific HARQ process, which is an instance of a stop and wait (SAW) protocol used to control the transmission/retransmission of that packet. Since three bits are defined for the HID, up to eight packet transactions may be pending at any given moment. The eight HARQ processes may thus be viewed as eight "HARQ channels" that may be used to transmit packets, with each HARQ channel being associated with and identified by a specific HID value.

[**0057**] The New Data indicator is used to indicate the transmission of a new packet on a particular HARQ channel. To improve decoding performance, the UE typically (soft) combines all received transmissions for the same packet prior to decoding. The New Data indicator informs the UE that the current transmission is for a new packet and that all prior received transmissions for the same HARQ channel (which are for a prior packet) should be purged. The New Data indicator is a single bit value that toggles between "0" and "1" for consecutive packets transmitted on the same HARQ channel, and is effectively a 1-bit sequence number for the packets transmitted on the HARQ channel. The UE can thus detect a new packet by observing the New Data indicator toggles. The New Data indicator is also referred to herein as the "color" bit.

[**0058**] **FIG. 4A** is a diagram of a MAC-hs entity **224***a* defined by W-CDMA Release 5 for the UTRAN side. There is one MAC-hs entity in the UTRAN for each cell that supports HS-DSCH transmission. The MAC-hs entity handles data transmitted on the HS-DSCH and further manages physical resources allocation for HSDPA.

[**0059**] The UTRAN MAC-hs entity includes a scheduling/priority handling entity **410**, an HARQ entity **420**, and an FTRC entity **430**. The scheduling/priority handling entity manages the data flows from the MAC-d entity according to their priorities, determines the TSN and priority queue for each packet being processed, and determines the transmission/retransmission of packets. The data flows from the MAC-d entity may include data with different priorities, which would then be placed in different priority queues. Data would thereafter be retrieved from the proper priority queue, based on priority and resource availability, and further processed for transmission/retransmission on the HS-DSCH.

[**0060**] One HARQ entity is provided to handle HARQ functionality for each UE. The HARQ entity performs transmission and (if necessary) retransmissions of packets to ensure reliable delivery of these packets to the UE. Retransmissions of packets are performed based on feedback from the UE. This feedback is in the form of an acknowledgment (ACK) to indicate successful decoding of a packet or a negative acknowledgment (NAK) to indicate an unsuccessful decoding of the packet.

[**0061**] The TFRC entity selects the appropriate transport format and resources for the data to be transmitted on the HS-DSCH.

[**0062**] **FIG. 4B** is a diagram of a MAC-hs entity **224***b* defined by W-CDMA Release 5 for the UE side. The MAC-hs entity handles HSDPA specific function and includes an HARQ entity **440**, a re-ordering queue distribution entity **450**, and one set of re-ordering buffer **462**, re-ordering entity **464**, and de-assembly entity **466** for each Queue ID configured at the UE. One re-ordering buffer is thus provided for and is associated with each priority queue used for the UE.

[**0063**] The UE HARQ entity handles all tasks required for HARQ (e.g., generates the required ACK/NAK for each received packet transmission). The re-ordering queue distribution entity provides recovered packets to the proper re-ordering buffer based on the Queue ID sent for the packet.

[**0064**] The reordering entity for each re-ordering buffer reorders the recovered packets in the buffer according to the TSN assigned to each packet. Each priority queue is associated with its own sequence of TSNs. The reordering entity then provides packets with consecutive TSNs, as they are recovered, to the de-assembly entity. The packets are not delivered to the de-assembly entity (i.e., "stalled") if packets with lower TSNs are missing.

[**0065**] The de-assembly entity associated with each re-ordering buffer de-assembles the packets provided to it. The de-assembly is performed by removing the header in each packet to obtain the MAC-hs payload (see **FIG. 3**), extracting the MAC-d PDUs included the MAC-hs payload, and discarding padding bits (if any). The de-assembly entity then provides the MAC-d PDUs to higher layers via the MAC-d sublayer.

[**0066**] W-CDMA Release 5 allows for a number of re-ordering entities and a number of HARQ processes (or HARQ channels) to be operating concurrently. Each re-ordering entity processes data for one specific priority queue and employs one re-ordering buffer for this task. There is thus a one-to-one correspondence between re-ordering entity, priority queue, and re-ordering buffer. The HARQ channels are standard stop and wait entities, and each HARQ channel can carry data meant for any of the priority queues (or re-ordering buffers).

[**0067**] **FIG. 5** is a diagram illustrating the timing relationship between various downlink and uplink physical channels used to implement HSDPA. The timing relationship shown in **FIG. 5** is for a specific UE designated to receive HSDPA transmission.

[**0068**] The uplink DPCCH is used by the UE to send signaling for the uplink DPCH. The timing of the uplink DPCCH is used as a reference, and the timing for the other physical channels is provided relative to that of the uplink DPCCH.

[**0069**] As shown in **FIG. 5, a** packet is transmitted to the UE in subframe **512** on the HS-DPSCH. Each subframe spans one 2-msec slot. The start of subframe **512** occurs some amount of time after time T_1, which is the start of a slot on the uplink DPCCH. The packet is transmitted to the designated UE, which receives and attempts to recover the packet. Based on the outcome of the decoding process, the UE reports back one of the following: (1) an ACK to indicate that the packet has been received correctly, (2) a NAK to indicate that the packet has been received in error (i.e., erased), or (3) nothing (i.e., a discontinuous transmission (DTX) bit) if it failed to detect (missed) the corresponding HS-SCCH. This feedback information is transmitted from

the UE in a designated subframe **514** on the uplink HS-DPCCH. Subframe **514** starts at time T_2, which is defined to be 7.5 slots plus a delay of τ_x (which is a value between 0 to 255 chips) from the end of the corresponding subframe **512**. The delay τ_x is defined such that the elapsed time, τ_y, between the start of the slot on the uplink DPCCH (T_1) and the start of subframe **514** on the uplink HS-DPCCH (T_2) is 256×m, where m is an integer.

[**0070**] The HSDPA design assumptions for the transmission of control information on downlink HS-SCCH and the uplink HS-DPCCH are as follows:

[**0071**] HS-SCCH (downlink)

[**0072**] Probability {Miss HS-SCCH}$\leqq 10^{-2}$

[**0073**] Probability {False alarm}$\leqq 10^{-4}$

[**0074**] HS-DPCCH (uplink)

[**0075**] Probability {ACK→NAK}$\leqq 10^{-2}$

[**0076**] Probability {NAK→ACK}$\leqq 10^{-4}$

[**0077**] Probability {DTX→ACK}$\leqq 10^{-2}$

[**0078**] The above states that for the HS-SCCH on the downlink (1) the probability of missing a control message accompanying a packet transaction needs to be less than or equal to 10^{-2} and (2) the probability of mis-detecting a control message sent to another UE as one being sent to the UE needs to be less than or equal to 10^{-4}. For the HS-DPCCH on the uplink (1) the probability of an ACK transmitted by the UE being received as a NAK by the Node B needs to be less than or equal to 10^{-2} (2) the probability of a NAK transmitted by the UE being received as an ACK by the Node B needs to be less than or equal to 10^{-4}, and (3) the probability of a DTX bit transmitted by the UE being received as an ACK by the Node B needs to be less than or equal to 10^{-2}.

[**0079**] In some channel conditions, especially in cases where the serving Node B for a particular UE is not the one with the best uplink (which may occur often since handing off from one Node B to another is slow for HSDPA), it may be difficult to achieve the ACK/NAK probability of error noted above.

[**0080**] A NAK to ACK error for a given packet results in the transmitter assuming that the packet has been correctly recovered by the receiver. The transmitter can then discard this packet and initiate the transmission of another packet on the same HARQ channel. Therefore, the NAK to ACK error results in a lost packet at the MAC layer. A higher probability of NAK to ACK error corresponds to higher occurrence of missing packets at the MAC layer. This in turn leads to higher probability of stalling by the re-ordering entity and more retransmissions required at the RLC layer.

[**0081**] The MAC layer needs to guarantee delivery of data in-order to higher layers. Since the HARQ mechanism using multiple HARQ channels may result in data being recovered out of sequence by the UE, a re-ordering sublayer was added in the MAC layer in W-CDMA Release 5. The reordering sublayer buffers packets as they are recovered, re-orders these packets, and delivers consecutive packets (as determined by their TSNs) to higher layers. If the reordering sublayer detects missing packets, based on gaps or holes in the TSNs of the recovered packets, then it holds off on (i.e., stalls) the delivery of all packets with TSNs later than the TSN of the earliest missing packet. When the missing packets are finally recovered, the re-ordering sublayer would then provide these newly recovered packets as well as any prior recovered packets that have been stalled.

[**0082**] Three "stall avoidance" mechanisms are provided by W-CDMA Release 5 to allow for practical implementations and to avoid situations where the re-ordering entity waits indefinitely for data that is not retransmitted. These stall avoidance mechanisms include:

[**0083**] Window-based scheme

[**0084**] Timer-based scheme

[**0085**] HARQ activity scheme

[**0086**] Each of these schemes is briefly described below.

Window-Based Scheme

[**0087**] Since each packet is tagged with a specific TSN, the recovered packets may be assembled in the proper sequence at the UE. Although the packets may be initially transmitted in sequential order by the Node B, these packets may be recovered out of order because a variable number of retransmissions may be required for each packet.

[**0088**] **FIG. 6A** is a diagram graphically illustrating the window maintained for a particular priority queue. The data for this priority queue is transmitted in packets that are identified by a 6-bit TSN. The TSN number space is 2^6=64 (i.e., from 0 through 63). To resolve ambiguity in the TSN number space caused by the fact that the TSN field has a finite size, the receiver may use a window. The size of this window is typically set at less than half of the TSN number space (i.e., <32) and may be set as small as 8 to 16. Since the window size is smaller than the TSN number space, the order of the packets within the window is unambiguous. In determining the size of the window, there is a tradeoff. If the window is small, the stall avoidance performance at the receiver increases and the receiver buffer size requirement is reduced. However, the stall probability at the transmitter or the probability of needing to interrupt retransmissions (depending on the transmission strategy) is increased.

[**0089**] The window is advanced forward as new packets are received. For the receiver, the leading edge of the window may be set equal to the "latest" TSN of all recovered packets. Packets toward the left of the window have successively "earlier" TSNs. Since the TSN value can wrap around, the latest TSN value may actually be smaller than an earlier TSN whenever the TSN wraps around. Missing packets with TSNs earlier than the trailing edge of the window may be assumed to be lost (i.e., not retransmitted). Thus, as the window is advanced forward, packets earlier than the trailing window edge are "flushed" and sent to higher layers.

[**0090**] This window mechanism may therefore be used by the transmitter to flush out missing packets at the receiver. However, since the size of the window would need to be large to allow for a large number of retransmissions, a large amount of data would be needed to flush out the missing packets. Consequently, the window-based scheme is marginally effective at the end of data bursts, which are frequent in the case of bursty closed loop traffic such as what is generated by browsing.

Timer-Based Scheme

[0091] In order to address the limitations of the window-based scheme, a timer-based mechanism was also introduced in W-CDMA Release 5. For the timer-based scheme, each time a missing packet stalls the delivery of packets to higher layers at the receiver, a "long" timer is started. If no other missing packets are thereafter detected then, once the long timer expires, the missing packet is assumed to have been recovered, and all packets stalled by this missing packet are then delivered to higher layers. This mechanism requires the maintenance of one long timer per re-ordering queue (or a maximum of eight long timers for the eight re-ordering queues defined in W-CDMA Release 5).

[0092] To ensure proper HARQ operation, the long timer needs to be set longer than the longest amount of time it takes to complete all retransmissions for a given packet. A large number of retransmissions may need to be performed to recover the missing packet. Moreover, in a system that asynchronously schedules retransmissions and where the amount of resources (e.g., as quantified by channelization codes and transmit power) available for HSDPA can change dynamically, the amount of time it takes to complete all retransmissions for a missing packet can vary widely. Consequently, the value of this timer would need to be long. Otherwise, the retransmissions for the missing packet may be prematurely terminated by the expiration of the timer, in which case the missing packet would need to be retransmitted by higher layers, which is highly undesirable. The re-ordering entity may need to wait a significant amount of time for the long timer to expire or until all the retransmissions for the missing payload are completed.

[0093] In addition to the large value for the long timer, if several packets within the window are detected as missing, then the timers for these missing packets are effectively cascaded (i.e., the long timer is restarted whenever a new missing packet is detected). This may result in even longer delays in delivering the missing payloads to higher layers (with the longest possible delay being two times the value of the long timer in the worse case).

HARQ Activity Scheme

[0094] The third scheme to avoid stalling the delivery of recovered packets to higher layers is to detect activity on the HARQ channels. When no packets are expected on any of the HARQ channels (i.e., all of the previous packet transactions are completed), then the data in all re-ordering queues can be delivered by the re-ordering entities to higher layers. This mechanism has a few shortcomings. First, this scheme requires that no packet transaction is pending on any of the HARQ channels in order to be able to flush the packets to higher layers. Second, the receiver "marks off" an HARQ channel only if the packet transaction on that channel is completed. Since the receiver may wait indefinitely for a packet to be recovered on a given HARQ channel (e.g., if the transmitter abandons the packet transaction), the re-ordering queues may never be flushed. Third, if a control message is missed (i.e., not detected by the receiver), then it is possible that the packet associated with this control message will be discarded by the re-ordering entity, if it is subsequently recovered. This would be the case if another packet with a later TSN is recovered and provided to the re-ordering entity before the packet with the missed control-message is retransmitted and the control channel is successfully decoded.

[0095] Techniques are provided herein to mitigate the effects of missing packets and improve stall avoidance performance. In particular, these techniques may be used to more effectively deal with situations in which the delivery of data by the MAC-hs sublayer to higher layers is stalled because of missing payloads. These techniques make use of information available from the HARQ processes in order to better decide whether or not to deliver data to higher layers.

[0096] The following mechanisms may be used to improve stall avoidance performance:

[0097] Transmission of the Queue ID on the HS-SCCH instead of with the payload.

[0098] Maintenance of an inactivity timer for each HARQ channel.

[0099] Transmission of a flushing indication to "flush" one or more HARQ channels, which may in turn result in data being flushed by the re-ordering entity to higher layers.

[0100] Formation of a set of candidate HARQ channels for each missing packet, which are channels that may be used to send the missing packet. A delay timer may be used for the candidate set formation.

[0101] Detection of activity on the HARQ channels to determine whether or not missing packets are lost.

[0102] Each of these mechanisms is described in further detail below.

[0103] The following terminology is used in the following description:

[0104] Packet transaction—a transmission and zero or more retransmissions of a particular packet on a particular HARQ channel.

[0105] Pending transaction—a packet transaction in which one or more additional retransmissions are expected for the packet.

[0106] Completed transaction—a packet transaction in which no additional retransmissions are expected for the packet.

[0107] Missing packet—a packet that is not recovered by the receiver and has a TSN earlier than that of another packet that has been recovered (a missing packet may still be in the process of being retransmitted or may have been discarded by the transmitter).

[0108] Recovered packet—a packet decoded correctly by the receiver.

[0109] Received packet—this term has two meanings depending on which entity is referred to. For the HARQ entity: a packet transmission received on a particular HARQ channel, which may or may not be decoded correctly. For the HARQ entity: a recovered packet that is received from the HARQ entity but not yet delivered to the upper layers.

[0110] Active HARQ channel—an HARQ channel in which the packet transaction is pending and the next transmission received on the channel should be for a retransmission of the current packet.

[0111] Inactive HARQ channel—an HARQ channel in which the packet transaction is completed and the next transmission received on the channel should be for a new packet

[0112] Candidate HARQ channel—an HARQ channel that may be used to send a packet detected to be missing.

Transmission of Queue ID on the Control Channel

[0113] In W-CDMA Release 5, the Queue ID that identifies the specific priority queue for a packet is transmitted as part of the header for that packet (see **FIG. 3**). Therefore, the priority queue to which the packet payload belongs can only be ascertained after the packet has been recovered. As a consequence, it is not possible to determine the priority queue associated with each missing packet since the packet has not been recovered.

[0114] If a packet is missing and the priority queue to which it belongs cannot be ascertained, then data delivery may be stalled for all re-ordering entities. This can degrade performance.

[0115] In an aspect, the priority queue for each packet is sent on the control message along with the packet transmission. A Queue ID field may be included in the control message, as shown by the dashed box in **FIG. 3**. By transmitting the Queue ID on the control channel, it would be possible to identify the priority queue for each packet for which the associated control message is correctly detected by the receiver, regardless of whether the packet itself is decoded correctly or in error. The information identifying the priority queue for each such packet may be used in conjunction with other mechanisms described below to further improve stall avoidance performance. For example, when used in conjunction with a mechanism described below, by identifying the priority queues for each such packet, it is possible to determine the priority queues that may be flushed to higher layers. This way, each such packet only affects the re-ordering entity associated with the priority queue for that packet and not the other re-ordering entities. Stall avoidance performance may therefore be improved.

Inactivity Timer for HARQ Channel

[0116] Each HARQ channel may be used to transmit one packet at any given moment. The packet is transmitted and possibly retransmitted one or more times on the HARQ channel until either (1) the transmitter receives an ACK for the packet or (2) the transmitter gives up on the transmission of the packet. In either case, the transmitter may thereafter send a new packet on the same HARQ channel and would indicate this by flipping the New Data indicator.

[0117] At the receiver, the packet transaction on a particular HARQ channel is deemed pending until (1) the packet is recovered correctly from the HARQ channel by the receiver, or (2) the receiver detects the transmission of a new packet on the HARQ channel (based on the New Data indicator in the control channel), since the transmitter would not send the new packet unless it decides to stop the transmissions of the prior packet.

[0118] At the receiver, new data will "flush" the pending data in the receiver window, which may have been discarded by the transmitter for one reason or other. For example, if there is no more data to be sent for priority queue A but there is still new data to be sent for priority queue B, then the data for priority queue B may be sent on the same HARQ channels previously used for priority queue A. In this case, the data for priority queue B would effectively "over-write" the data for priority queue A. The toggling of the New Data indicator for each HARQ channel allows the receiver to ascertain when the prior packet is being discarded by the transmitter.

[0119] However, if there is no more data to transmit, then there may be no activity on any of the HARQ channels. Without new activity, it is not possible for the UE to ascertain whether a given packet has been discarded by the network or that a retransmission for the packet is forthcoming. For each HARQ channel that is waiting for a packet that has been discarded by the transmitter and for which no new packet has been sent, the re-ordering entity associated with this HARQ channel will have to wait until the long timer maintained for the re-ordering queue elapses before it can deliver the available data to higher layers. The HARQ process will itself wait indefinitely for the transmission of a new packet or a retransmission of the current packet on the HARQ channel.

[0120] In another aspect, an "inactivity" timer may be maintained for each active HARQ channel to avoid the situation whereby the HARQ entity waits indefinitely for a retransmission of a packet that has been discarded by the transmitter. In an embodiment, the inactivity timer monitors activity on HARQ channel based on control messages received on the control channel for that HARQ channel. In one implementation, each time a new control message is received on the control channel for a particular active HARQ channel, the inactivity timer for that channel is restarted. If the inactivity timer elapses before another new control message is received for the HARQ channel, then the channel is deemed to be inactive.

[0121] A major advantage of using an inactivity timer for each HARQ channel is that it does not need to be as long as the long timer used for each re-ordering buffer. This is because the inactivity timer only needs to cover the maximum amount of time expected to take to receive a control message for an active HARQ channel (or two control messages, just in case the first one was missed). Since the probability of miss for the control channel is in the order of 10^{-2}, the probability of missing two control channel transmissions in a row would be in the order of 10^{-4}. Therefore, if the timer is set to the maximum time needed to perform two retransmissions, then the probability of erroneously discarding a packet still being transmitted would be approximately the same as the desired probability of NAK to ACK error, which is desirable since the two have essentially the same effect. In contrast, the long timer needs to be long enough to handle the maximum number of retransmissions for a missing packet (and not just two control message transmissions).

[0122] A local variable CurrNewData may be maintained for each HARQ channel and set to the New Data indicator received in the most recent transmission on the channel. If the HARQ channel is deemed to be inactive, then the next transmission on the channel is expected to be for a new packet, in which case the New Data indicator for this

transmission will be different from the CurrNewData value. However, if the New Data indicator for the new transmission is the same as the CurrNewData value, then it may be assumed that the same packet is being sent (e.g., due to an ACK to NAK error), in which case the transmission may be discarded and an ACK may be sent back to the transmitter.

Flushing Indication for HARQ Channels

[0123] In yet another aspect, a flushing indication may be transmitted on the control channel and used to direct the HARQ entity at the UE to flush one or more HARQ channels. A flushed HARQ channel denotes that the pending transaction on the channel is completed. The re-ordering entity waiting on this HARQ channel may then perform the appropriate actions based on this information, as described below.

[0124] Various flushing indication may be sent to the UE in various manners. For example, the flushing indication may be sent in a control message using a reserved value in a field used to indicate code set or a field used to indicate transport block size. If the UE receives a flushing indication, it would not attempt to decode a packet. The reason for this is described below. Each flushed HARQ channel may then be put in an Inactive state to indicate that no additional retransmissions are expected to be received on the channel.

[0125] One or more HARQ channels may be flushed based on a single flushing indication. In a first embodiment, the flushing indication only flushes the specific HARQ channel for which it is sent, which may be identified by the HID field in the control message. For this embodiment, multiple flushing indications may be sent if multiple HARQ channels are to be flushed. In a second embodiment, the flushing indication flushes all HARQ channels. This embodiment reduces the number of transmissions for flushing indications. However, the applicability of the flushing indication would also be reduced to the case where no data needs to be sent on any of the HARQ channels for any of the re-ordering queues. In a third embodiment, the flushing indication flushes all HARQ channels expecting data for a particular priority queue, which may be indicated in the Queue ID field included in the same control message used to send the flushing indication. This embodiment may be used to flush all HARQ channels for a particular priority queue after the transmission of all the data in the traffic burst meant for that priority queue has been completed.

[0126] The transmission of a flushing indication does not require significant resources and may be used to terminate early the inactivity timer maintained for a particular HARQ channel. Typically, the system knows which UEs have increased risk of missing packets in their re-ordering buffers. For example, UEs with better uplink to a cell other than the serving cell or high frame error rates (FERs) on the DPCH are more likely to have missing packets. For these UEs, a flushing indication may then be sent upon completion of the transmission of the traffic burst for each priority queue.

Detection of Activity on HARQ Channel/Delay Timer for Missing Packet

[0127] If the first transmissions of the packets occur in sequential order based on their TSNs, then missing packets may be identified by the TSNs of the recovered packets. In particular, a packet may be deemed as being missing if another packet with a later TSN is recovered first. (A later TSN may be smaller in value than an earlier TSN, when the TSN value wraps around.) In this case, the missing packet with an earlier TSN may be assumed to be in transmission.

[0128] At the moment a packet is detected to be missing, a set of candidate HARQ channels on which the missing packet may be sent can be identified. Thereafter, activities on the candidate HARQ channels may be monitored to determine whether or not any of these channels may have been the one used to send the missing packet. The candidate HARQ channels may thus be successively removed from the set, as described below. A missing packet is deemed to be lost if all candidate HARQ channels are removed and the set is empty. Appropriate action may then be taken by the re-ordering entity.

[0129] The HARQ channels to be included in the candidate set may be selected in various manners, which may be dependent on the available information. In a first embodiment, the candidate set is formed upon detecting a missing packet and would include all HARQ channels that may be used for packet transmission, except for the HARQ channel for the recovered packet that was used to detect the missing packet.

[0130] In a second embodiment, the candidate set for a missing packet is defined to include all active HARQ channels at the time the missing packet is detected. The snapshot of the candidate HARQ channels at this time would be accurate if at least one control message for the missing packet is received, since that control message would put the HARQ channel corresponding to the missing packet in the active state, and the channel would then be included in the candidate set for the missing packet.

[0131] However, this snapshot would not be accurate if all control messages for the HARQ channel used to send the missing packet were missed by the receiver. For example, if a control message for the first transmission of packet **P1** sent on HARQ channel **H1** is missed, then this channel would remain in the Inactive state. Thereafter, if another packet **P2** for the same priority queue is sent on another HARQ channel and is decoded correctly (before packet **P1** is retransmitted on HARQ channel **H1**), then packet **P1** would be detected to be missing. However, the candidate set would not include HARQ channel **H1** since it is inactive when the snapshot of the set is taken after packet **P2** was recovered. The likelihood of these events occurring may be low, and the impact would be that packet **P1** would be discarded by the re-ordering entity when it is finally recovered.

[0132] In a third embodiment, which avoids the problem described above, the candidate set for a missing packet is formed some amount of time after the missing packet was detected. This delay is selected to be long enough to ensure that at least one control message will be received for the missing packet before the candidate set is formed for the missing packet. A "delay" timer (denoted herein as **TM2**) may be used to keep track of the amount of time to wait before taking the snapshot of the candidate set.

[0133] Based on the specified reliability for the control channel, which is 10^{-2}, the delay timer would only need be long enough to receive one additional control message transmission. If the delay timer is used, then the receiver would in effect need to miss two consecutive control mes-

sage transmissions in order to form an inaccurate candidate set, and thus lose the packet. Based on a probability of miss of 10^{-2} for the control channel, two consecutive control channel misses would occur with a probability of 10^{-4}, which is deemed acceptable. A longer value for the delay timer may degrade performance rather than affect the underlying scheme.

[0134] In a fourth embodiment, a candidate set is initially formed for each missing packet at the time the missing packet is detected, and would include all HARQ channels except for the HARQ channel of the recovered packet used to detect the missing packet (same as the first embodiment). However, a delay timer is also started. The candidate HARQ channels in the set may thereafter be removed if it is subsequently determined that the channel cannot be used to send the missing packet. At the expiration of the delay timer, the candidate set is modified and all HARQ channels that are not active at this time are removed from the set. The modified candidate set is a subset of the initial candidate set. For the fourth embodiment, the delay timer is used to catch HARQ channels for which all control messages have been missed previously by the receiver, similar to the third embodiment described above. However, the operation of the delay timer does not affect or impair the removal of HARQ channels from the initial formed candidate set (e.g., HARQ channels for which packets with later TSNs have been recovered).

[0135] For the embodiments that make use of the delay timer, this timer may be implementation in various ways, as described in further detail below.

[0136] If the Queue ID is also sent on the control channel and at least one control message is received for the missing packet, then the candidate set for the missing packet would only need to include the HARQ channels used for this priority queue. Performance may be enhanced since the number of candidate HARQ channels may be reduced.

[0137] The delay timer and flushing indication mechanisms can help put the HARQ channels into an inactive state by the time the candidate set is formed. For example, the inactivity timer for a given HARQ channel may elapse during the time the delay timer is active, in which case this HARQ channel would not be included in the candidate set. These mechanisms may thus restrict the set of candidate HARQ channels, which may improve the performance of the stall avoidance mechanism.

[0138] For all embodiments used to form the candidate set for a missing packet, the candidate HARQ channels are thereafter removed from the set if it is subsequently determined that they cannot be used to send the missing packet. In particular, a candidate HARQ channel is removed from the set if the pending transaction on the channel becomes completed.

[0139] In an embodiment, a packet transaction on an HARQ channel is deemed to be completed if any one of the followings conditions occurs: (1) the packet is recovered from the HARQ channel, (2) the HARQ channel is active and a new packet is detected to have been sent on the channel, (3) the inactivity timer for the HARQ channel expires, or (4) a flushing indication is received for the HARQ channel. Condition (1) results in the recovery of the missing packet or the recovery of a packet that is later than the missing packet. Condition (2) may be detected by observing the New Data indicator changes and may occur, for example, if the transmitter decides to abandon the prior packet and instead send a new packet on the HARQ channel. Conditions (1) and (2) also assume that initial transmissions are always performed in sequence and that a new packet is not transmitted on the same HARQ channel until the pending transaction is completed.

[0140] For a given missing packet, each HARQ channel in the associated candidate set may be removed if any of the four conditions described above occurs. When the candidate set is empty, then the missing packet is assumed to be lost (i.e., will not be recovered by the receiver). Appropriate action may then be performed. For example, all recovered packets stalled because of this missing packet may now be delivered to higher layers.

[0141] As noted above, the transmission of the Queue ID on the control channel may be used in conjunction with other mechanisms described above to improve performance. In particular, the Queue ID on the control channel may (1) reduce the number of candidate HARQ channels for a missing packet, (2) allow for possible tailoring of the inactivity timer to the priority queue, and (3) allow use of the flush indication even when other re-ordering entities are in the middle of transmissions.

[0142] In the following description, the candidate set is formed after the expiration of the delay timer, which is started when a missing packet is detected.

Example Transmissions

[0143] The various mechanisms described above to improve stall avoidance performance is described below for some example transmissions. For these examples, the NAK/ACK feedback on the HS-DPCCH is shown aligned with the time of the packet transmission that it relates to (for simplicity). The "transmitted" feedback values are those sent by the UE on the uplink, and the "received" feedback values are those detected by the Node B. The first transmissions for the packets are in sequential order based on the TSNs of the packets. Thus, missing packets may be determined based on the TSNs of the packets recovered by the UE.

[0144] In the following examples, a delay timer (TM2) is set when a packet is detected to be missing. A set of candidate HARQ channels for the missing packet is determined after the delay timer expires.

[0145] **FIG. 7A** illustrates a case where the control channel is received and the New Data indicator in the control message is relied on to flush data from the re-ordering queue to higher layers.

[0146] At time T_1, a packet was received on HARQ channel H1 but not decoded correctly. For this packet transmission, the receiver sends a NAK feedback, which is erroneously received by the transmitter as an ACK. The state of HARQ channel H1 is set to Active and the HARQ entity restarts the inactivity timer (TM1) for this channel.

[0147] At time T_2, a packet with TSN_x was received on HARQ channel H2 and decoded correctly, and an ACK feedback is sent for this packet transmission. The state of HARQ channel H2 is set to Inactive. The recovered packet is then sent to the re-ordering entity for the priority queue of

this packet. The re-ordering entity is able to detect that a packet with TSNx−1 is missing based on TSNx of the packet it just received. A delay timer (TM2) is then started for the missing packet. The recovered packet with TSNx is stalled because of the missing packet.

[0148] At time T_3, a packet was received on HARQ channel H3 but not decoded correctly, and a NAK feedback is sent for this packet transmission. The state of HARQ channel H3 is set to Active, and the HARQ entity restarts the inactivity timer for this channel.

[0149] At time T_4, the delay timer for the missing packet expires, and the set of candidate HARQ channels for the missing packet is determined. The candidate set for the missing packet includes all HARQ channels that are in the Active state at the expiration of the delay timer and which may be used to send the missing packet. The candidate set thus includes H1 and H3.

[0150] At time T_5, a packet with TSNx+1 was received on HARQ channel H3 and decoded correctly, and an ACK feedback is sent for this packet transmission. The state of HARQ channel H3 is set to Inactive, and the HARQ entity restarts the inactivity timer for this channel. The recovered packet with TSNx+1 is also stalled because of the missing packet. Since the packet transaction for HARQ channel H3 is completed for a packet that comes later than the missing packet, this channel could not have been the one used to send the missing packet. H3 is thus removed from the candidate set, which now includes only H1.

[0151] At time T_6, a new packet was received on HARQ channel H1, with the New Data indicator toggled from D0 to D1. The new packet was sent by the transmitter on this channel because it erroneously receives an ACK for the prior packet transmission at time T_1. This change in the New Data indicator signifies that the pending packet transaction on HARQ channel H1 is completed, and that the missing packet will not be sent on this channel. H1 is thus removed from the candidate set, which is now empty. The two stalled packets with TSNx and TSNx+1 are then delivered to higher layers.

[0152] **FIG. 7B** illustrates a case where the control channel is received and the inactivity timer (TM1) is relied on to flush data from the re-ordering queue to higher layers. The packet transmissions in **FIG. 7B** are similar to that shown in **FIG. 7**A, except that a packet transmission was not received at time T_6. At time T_7, the inactivity timer for HARQ channel H1 expires. This indicates that the missing packet is not expected to be received on this channel. H1 is thus removed from the candidate set, which then becomes empty. The two stalled packets with TSNx and TSNx+1 are then delivered to higher layers.

[0153] **FIG. 7C** illustrates a case where the control channel is received and a flushing indication sent on the control channel is relied on to flush data from the re-ordering queue to higher layers. The packet transmissions in **FIG. 7C** are similar to that shown in **FIG. 7**A, except that a flushing indication (instead of a packet transmission) was received at time T_6. For this example, the flushing indication covers all HARQ channels used for the priority queue identified in the control message. H1 and H3 would then be flushed because they are used for the identified priority queue. The candidate set for the missing packet would then become empty. The stalled packets with TSNx and TSNx+1 are then delivered to higher layers.

[0154] **FIG. 7D** illustrates a case where the control channel is not received and a DTX to NAK error is received by the transmitter. **FIG. 7D** also shows a situation where the use of the delay timer allows for the correct determination of the candidate set for a missing packet, which would have been lost otherwise.

[0155] At time T_1, a packet was sent on HARQ channel H1 but the control channel was not received (i.e., missed). The receiver does not know the existence of this packet transmission and sends a DTX (i.e., no feedback), which is erroneously received by the transmitter as a NAK. Because the receiver is not aware of the packet transmission, the state of HARQ channel H1 remains set to Inactive and the inactivity timer for this channel is not restarted.

[0156] At time T_2, a packet with TSNx was received on HARQ channel H2 and decoded correctly, and an ACK feedback is sent for this packet transmission. The state of HARQ channel H2 is set to Inactive, and the inactivity timer for this channel is restarted (not shown in **FIG. 7D**). The recovered packet is then sent to the re-ordering entity for the priority queue of this packet. The re-ordering entity is able to detect that a packet with TSNx−1 is missing based on the TSNx of the packet it just received. A delay timer is then started for the missing packet.

[0157] At time T_3, a packet retransmission was received on HARQ channel H1 for the NAK detected by the transmitter at time T_1. This packet is not decoded correctly, and a NAK feedback is sent for the packet transmission. The state of HARQ channel H1 is set to Active, and the HARQ entity restarts the inactivity timer for this channel (not shown in **FIG. 7D**).

[0158] At time T_4, a new packet with TSNx+1 was received on HARQ channel H2 with the New Data indicator changed to a new value (i.e., from D0 to D1). This packet was decoded correctly, and an ACK feedback is sent for this packet transmission. The state of HARQ channel H2 is set to Inactive, and the HARQ entity cancels the inactivity timer for this channel.

[0159] At time T_5, the delay timer for the missing packet expires. At this point, there is one Active HARQ channel, H1. The candidate set would then include only HARQ channel H1.

[0160] As shown in this example, the use of the delay timer allows for the determination of the correct candidate set for the missing packet. Without the delay timer, the candidate set would be an empty set since the control message at time T_1 for the packet with TSNx−1 was missed. With the delay timer, the second transmission at time T_3 within the delay timer window allows HARQ channel H1 to be included in the candidate set.

[0161] At time T_6, the missing packet with TSNx−1 was received on HARQ channel H1 and decoded correctly, and an ACK feedback is sent for this packet transmission. The packets with TSNx−1 and TSNx are then delivered to higher layers.

[0162] At time T_7, a packet retransmission was received on HARQ channel H2 for the packet with TSNx+1, which was NAKed at time T_4. This packet was decoded correctly and delivered by the re-ordering entity to higher layers. An ACK feedback is also sent for the packet.

Specific Implementation

[0163] For clarity, a specific implementation of the processing performed by the HARQ entities and the re-ordering entities at the transmitter and receiver is described below. This implementation maintains a delay timer for a missing packet to allow for a candidate set to be more accurately formed for the missing packet. However, this delay timer is not strictly necessary as described above. If the delay timer is not used, then the resulting behavior is equivalent to setting the delay timer value to 0.

[0164] In the following implementation, it is assumed that the Queue ID is sent on the control channel, and the priority queue of a given packet it is not known to the HARQ entity until the packet is decoded correctly. In this case, when a packet transaction is completed, the HARQ entity notifies all of the re-ordering entities since the lost packet could have been for any priority queue. Moreover, when the delay timer expires, the re-ordering entity does not know which HARQ channels carry data for it, and would therefore include all active HARQ channels in the candidate set for the missing packet.

Transmitter HARQ

[0165] **FIG. 8** is a flow diagram of an embodiment of a process **800** performed by the transmitter HARQ entity to send a packet on a particular HARQ channel. For this embodiment, a local variable NewData is maintained for each HARQ channel. This variable toggles for the first transmission of a new packet when the payload to be transmitted changes. This variable is initialized to "1".

[0166] Initially, a determination is made whether or not there is a packet to be transmitted (step **812**). If the answer is no, then the process proceeds to step **822**. Otherwise, a determination is made whether or not this is the first transmission of the packet (step **814**). If the answer is again yes, then the NewData variable is toggled (i.e., set to "0" for the first new packet), and the New Data indicator in the control message for the packet is also toggled since it is set to the NewData value (step **816**). Otherwise, if the packet is being retransmitted, then step **816** is skipped and the NewData variable is not toggled. The Queue ID in the control message for the packet (if it is sent there) is set to the priority queue of the packet being transmitted (step **818**). The packet and the control message (which would include the HID, Queue ID, New Data indicator, and so on) are then forwarded to the physical layer for transmission (step **820**).

[0167] In step **822**, a determination is made whether or not an ACK was received from the UE for a current packet transmission (if any) on the HARQ channel. If the answer is yes, then the current packet being transmitted on this channel is discarded (step **824**), and the scheduler is informed that this HARQ channel is available to send another packet (step **826**). After step **826**, or if an ACK was not received in step **822**, the process returns to step **812**.

Receiver HARQ

[0168] **FIGS. 9A and 9B** show a flow diagram of an embodiment of a process **900** performed by the receiver HARQ entity to receive a packet on a particular HARQ channel. Three local variables, CurrNewData, CurrQueueID, and CurrState, are maintained for each HARQ channel. The CurrNewData variable holds the value of the New Data indicator for the current transmission on the HARQ channel, and the CurrQueueID variable holds the value of the Queue ID for the current transmission. The CurrState variable indicates the current state of the HARQ channel and is either Inactive or Active.

[0169] One inactivity timer is also maintained for each HARQ channel. In an embodiment, the inactivity timer is set long enough so that there is a high probability of two packet transmissions occurring on the HARQ channel before the inactivity timer expires. However, other values may also be used for the inactivity timer, and this is within the scope of the invention.

[0170] The variables for each HARQ channel are initialized by setting CurrNewData to "1" and CurrState to Inactive (step **910**). A determination is made whether or not a control message was received on the control channel for the UE (step **912**). If the answer is no, then the process returns to step **912** and waits. Otherwise, a determination is made whether or not the control message includes a flushing indication (step **914**). If the answer is yes, then one or more HARQ channels are flushed, depending on the particular flushing scheme being implemented (step **916**). The flushing may be performed as described below in **FIG. 9D**. As part of the flushing processing, the re-ordering entity for each flushed HARQ channel is informed that the packet transaction is completed on that channel. Since a control message with the flushing indication is sent to only flush HARQ channels, and no packet is transmitted concurrent with the control message, the process thereafter returns to step **912** to wait for the next control message.

[0171] If the received control message was not sent to flush the HARQ channels, as determined in step **914**, then it is one sent for a packet transmission on the HS-DSCH. In that case, the particular HARQ channel used for the current packet transmission is determined from the HID field in the control message (step **922**). The inactivity timer for this HARQ channel is then restarted (step **924**). As described above, the inactivity timer for the HARQ channel is restarted whenever a control message is received for the channel, and if no activity is detected for the channel by the time the inactivity timer expires, then the channel is deemed to be inactive and appropriate actions may be performed. The inactivity timer is used to avoid the situation whereby the HARQ entity waits indefinitely for a packet transmission on a particular HARQ channel, which is not sent for any number of reasons. The processing to be performed upon expiration of the inactivity timer is described below.

[0172] The current state of the HARQ channel is then determined based on the CurrState variable (step **926**), and the processing to be performed for the HARQ channel is dependent on the current state.

[0173] If the HARQ channel is in the Inactive state, indicating that the prior packet transaction is completed, then the current transmission is expected to be the first transmission for a new packet. In that case, a determination is made whether or not the CurrNewData value is equal to the New Data indicator in the control message for this packet transaction (step **930**). If they are the same, indicating that the current transmission is not for a new packet, then the received packet is discarded (step **932**), an ACK is sent back to the transmitter (step **934**), and the process returns to step

912 to wait for the next control message. The prior packet may have been sent, for example, if the receiver sends an ACK for the prior packet transmission but the transmitter erroneously receives a NAK instead and retransmits the prior packet.

[**0174**] Otherwise, if the CurrNewData value is not equal to the New Data indicator, indicating that the current transmission is for a new packet, then the variables for the HARQ channel are updated by setting CurrState to Active (step **942**), CurrNewData to the New Data indicator in the control message (step **944**), and CurrQueueID to the Queue ID value in the control message (if it is sent there) (step **946**). The new packet received on the HS-DSCH is then stored in a soft buffer used for the priority queue identified by the CurrQueueID value (step **948**). The process then proceeds to step **958**.

[**0175**] Back in step **926**, if the HARQ channel is in the Active state, then the current transmission is expected to be a retransmission for the current packet, since this transaction is still pending. In that case, a determination is made whether or not the CurrNewData value is equal to the New Data indicator in the control message (step **950**). If they are the same, indicating that the current transmission is indeed a retransmission, then the received packet is combined with prior transmissions of the packet (step **952**) and the process then proceeds to step **958**.

[**0176**] Otherwise, if the CurrNewData value is not equal to the New Data indicator as determined in step **950**, then the current transmission is for a new packet. The new packet may have been sent, for example, if the transmitter decided to abandon the pending transaction before it is completed or erroneously receives an ACK for a transmitted NAK. In that case, the prior packet in the soft buffer is purged (step **954**). If the priority queue for the prior packet is known (e.g., as identified by the CurrQueueID value, which may be obtained from the Queue ID included in the control message), then the re-ordering entity for this priority queue is informed that the transaction for the prior packet is completed (step **956**). If the priority queue of the prior packet is not known (e.g., not sent on the control message), then all re-ordering entities may be informed of the completed transaction on this HARQ channel. The variables for the HARQ channel are then updated by setting CurrNewData to the New Data indicator in the control message (step **944**) and setting CurrQueueID to the Queue ID value in the control message (if it is sent there) (step **946**). The new packet received on the HS-DSCH is then stored in the soft buffer (step **948**), which was just purged of the prior packet. The process then proceeds to step **958**.

[**0177**] In step **958**, the packet just received, which may have been combined with prior transmissions (if any) received for the packet, is then decoded to attempt to recover the packet. If the packet is not recovered, as determined in step **960**, then a NAK feedback is sent to the transmitter (step **962**), and the process returns to step **912**. Otherwise, if the packet was successfully recovered, then an ACK feedback is sent (step **964**), the current state of the HARQ channel is set to Inactive to indicate that the current packet transaction is completed and that no additional transmissions are expected on this HARQ channel (step **966**), and the recovered packet is sent to the re-ordering entity for the priority queue identified by the CurrQueueID value (step **968**). The process thereafter returns to step **912** to wait for the next control message.

[**0178**] **FIG. 9C** is a flow diagram of an embodiment of a process **970** performed by the receiver HARQ entity to maintain the inactivity timers for the HARQ channels. The steps in this process may be performed for each TTI.

[**0179**] Initially, a determination is made whether or not an inactivity timer has expired (step **972**). Typically, only one inactivity timer, if any, expires in any given TTI since each timer is restarted at a different time whenever a control message is received for the HARQ channel associated with the timer. If no inactivity timer has expired, then the process returns to step **972** and waits. Otherwise, the data in the soft buffer for the HARQ channel with the expired inactivity timer is discarded (step **974**). The re-ordering entity handling the priority queue for the last packet transmission on the HARQ channel with the expired inactivity timer is then informed that this packet transaction is completed (step **976**). The state of the HARQ channel with the expired inactivity timer is then set to Inactive (step **978**), and the process returns to step **972**.

[**0180**] **FIG. 9D** is a flow diagram of an embodiment of a process performed by the receiver HARQ entity upon receiving a flushing indication on a control message. This process may be performed for step **916** in **FIG. 9A**. Initially, the HARQ channels to be flushed are identified (step **982**). In one embodiment, these HARQ channels are identified as those used for a particular priority queue identified by the Queue ID value included in the control message itself. In other embodiments, the flushing indication may flush a specific HARQ channel, all HARQ channels, or some set of ascertainable HARQ channels. In any case, the data in the soft buffer for each identified HARQ channel is discarded (step **984**). The state of each identified HARQ channel is then set to Inactive (step **986**). The re-ordering entity handling each identified HARQ channel is then informed that the packet transaction on this channel is completed (step **988**). The process then terminates.

Transmitter Re-Ordering Entity

[**0181**] The transmitter may maintain a window for each priority queue. This window would have the same size as that used by the receiver and is used to flush out old data that will not be transmitted because the receiver would discard the data anyway, as described above. At the transmitter, if packets for a given priority queue are transmitted in sequential order based on their TSNs, then the leading edge of the window may be set to the latest TSN of the packets sent. Thereafter, as each new packet is transmitted, the window leading edge is moved to the TSN of this packet. As the window is slid forward for each new packet transmission, all packets with TSNs older than the trailing edge of the window are discarded.

[**0182**] At the transmitter, one "transmitter re-ordering entity" is responsible for determining packets to be transmitted on the HS-DSCH for each priority queue. The transmitter re-ordering entity is the protocol peer of the re-ordering entity at the transmitter. The transmitter re-ordering entity maintains the window for the associated priority queue. A local variable TxLeadWinEdge is used to

indicate the leading edge of the window and is initially set to "0". The size of the window is denoted by a local variable WindowSize.

[0183] **FIG. 10** is a flow diagram of an embodiment of a process **1000** performed by the transmitter re-ordering entity for a particular priority queue. The steps shown in **FIG. 10** are performed whenever a new packet is scheduled to be transmitted for this priority queue.

[0184] For the new packet to be sent, the transmitter re-ordering entity first slides the window forward by incrementing the TxLeadWinEdge variable (step **1012**). The TSN for the new packet is then set to the updated TxLeadWinEdge value (step **1014**). Any pending packets with TSNs outside the window are then discarded (step **1016**). In particular, packets with TSN≦(TxLeadWinEdge−WindowSize) would fall outside the window and are discarded. (Modulo-WindowSize operations are performed to account for wrap-around in the TSN number space.) The reason for discarding these packets is because they will fall outside the window at the receiver and will be discarded if received. The new packet is then sent to the HARQ entity designated to process the packet (step **1018**). The process then terminates.

[0185] If the channel conditions for the receiver are poor, then a flushing indication may be sent to the receiver when the transmission of all data in a data burst for a particular priority queue is completed. This flushing indication may be used to flush all HARQ channels used for the priority queue, as described above. The flushing indication may be sent, for example, if the serving cell is not the one with the best uplink to the UE and there is greater likelihood of not correctly receiving the NAK/ACK feedback from the UE.

Receiver Re-Ordering Entity

[0186] At the receiver, one receiver re-ordering entity is responsible for processing the data for each priority queue. The receiver re-ordering entity receives packets recovered by the HARQ entity for the associated priority queue, re-orders these packets, and delivers those packets that are in sequence to higher layers. The re-ordering entity maintains a window with a size that is replicated at the transmitter. A local variable RxLeadWinEdge is used to indicate the latest TSN received for the priority queue and is initially set to "0". The size of the window is denoted by a local variable WindowSize. Packets with TSNs within the range {(RxLeadWinEdge−WindowSize+1) . . . RxLeadWinEdge} are deemed to be within the receiving window.

[0187] In one embodiment, each receiver re-ordering entity is able to start multiple delay timers, one for each hole detected within the window. The delay timer is set long enough such that there is a high probability of at least one control message transmission being sent for the HARQ channel used to send the missing packet before the timer expires. Each delay timer is associated with a particular Missing packet.

[0188] **FIG. 6B** is a diagram illustrating a window maintained by the receiver re-ordering entity. The packets are identified and referred to by their TSNs. In an embodiment, from the receiver re-ordering entity's perspective, each packet within the TSN number space is associated with one of four possible states: Delivered, Received, Missing, and Expected. A packet is considered (1) Delivered if it has been received from the HARQ entity and sent to higher layers, (2) Received if it has been received from the HARQ entity but not yet delivered to higher layers, (3) Missing if it is part of a hole within the window, and (4) Expected if it falls outside the window. A packet is deemed Missing if another packet with a later TSN is received before it. A hole appears whenever there are one or more consecutive Missing packets in the window. There may be zero, one, or multiple holes in the window at any given moment. Initially, the state of all packets within the window is set to Delivered and those outside the window are set to Expected.

[0189] In an embodiment, for each packet in the Missing state (i.e., a Missing packet), the receiver re-ordering entity maintains a MaskVector to mark the candidate HARQ channels for the Missing packet. The MaskVector is thus used to indicate whether or not each of the HARQ channels may be used to send the Missing packet. The MaskVector has a size equal to the number of all HARQ channels that may be used for transmission for all priority queues, and includes one element for each possible HARQ channel.

[0190] The MaskVector for each Missing packet is "initialized" when the missing packet is first detected. The initial candidate set would have the element for each HARQ channel set to "1" except for the element for the HARQ channel for the received packet that was used to detect the missing packet, which is set to "0". A value of "1" indicates that the associated HARQ channel may be used to send the Missing packet, and a value of "0" indicates that the channel could not be used to send the Missing packet. Thus, the initial candidate set includes all HARQ channels except for the one known HARQ channel that could not be used to send the missing packet. Thereafter, the element for each candidate HARQ channel may be set to "0" if it is determined that the channel could not be used to send the Missing packet. This would be the case if: (1) a new packet is sent on the HARQ channel, as determined by a change in the New Data indicator for the channel, (2) the inactivity timer for the channel expires, or (3) a flushing indication is received for the channel.

[0191] The MaskVector for each Missing packet is also "modified" when the delay timer applicable for the Missing packet expires. The modified candidate set would be purged of all HARQ channels that are not active when the delay timer expires (by setting the elements in the MaskVector for these HARQ channels to "0"). The process to eliminate the remaining HARQ channels from the candidate set would then proceed as before.

[0192] **FIGS. 11A and 11B** show a flow diagram of an embodiment of a process **1100** performed by the receiver re-ordering entity for a particular priority queue. Initially, the receiver re-ordering entity receives a packet with TSNr on HARQ channel Hx from the HARQ entity (step **1112**). A determination is then made whether or not the just-received packet (i.e., the current packet) is a new packet (step **1114**). The current packet is deemed a new packet if TSNr falls outside the window, and is deemed a retransmission of a pending packet if TSNr falls within the window. If the current packet is a new packet, then the process proceeds to step **1140**.

[0193] Otherwise, if TSNr falls within the window, then the current packet is either (1) a duplicate of a prior received packet or (2) one for a Missing packet that will partially or

completely fill a hole within the window. A determination is then made whether or not the current packet is one that has already been received or delivered (step **1116**). If the answer is yes, then the current packet is a duplicate and discarded (step **1118**), and the process terminates.

[**0194**] Otherwise, if the answer is no in step **1116**, then the current packet is for a Missing packet within the window. In that case, the MaskVector of each earlier Missing packet (i.e., those with TSN earlier than TSNr) is updated by setting the element corresponding to HARQ channel Hx to "0" (step **1120**). This is because a later packet with TSNr was received on this channel and could not be the one used to send the earlier Missing packet. Each time the MaskVector is updated, it is also checked to determine whether or not all elements of the MaskVector are "0s", which would indicate that the candidate set is empty and that the Missing packet is lost. If the MaskVector includes all "0s", then all Received packets that are stalled by this Missing packet are delivered to higher layers, and all packets earlier than this packet are set to Delivered.

[**0195**] The state of the current packet is then set to Received (step **1122**). All Received packets (if any) not currently stalled by a hole are delivered to higher layers (**1124**). In particular, consecutive Received packets starting from the left side of the window and continuing until the first hole (or a Missing packet) is detected are identified and sent to higher layers. The state of these delivered packets is also set to Delivered.

[**0196**] In an embodiment, one delay timer is maintained for the last packet in each "original" hole, which is a hole that occurs whenever a new packet is received by the re-ordering entity and there are one or more Expected packets earlier than (or to the left of) the new packet. The state of the Expected packets in the hole is changed to Missing. This is described in further detail below. Subsequently, a packet may be received by the re-ordering entity for a Missing packet in this hole. If the hole as a width of one packet, then the received packet would completely cover the hole and the delay timer is canceled. Otherwise, if the hole covers multiple packets and the current packet is the last Missing packet in this hole, then the delay timer is moved to the (new) last Missing packet in the partially covered hole. And if the hole covers multiple packets and the current packet is not the last Missing packet in the hole, then the delay timer is not affected. With this implementation, only one delay timer needs to be maintained for all missing packets within an original hole (since they were detected at the same time), even if this hole is subsequently chopped up into multiple holes by packets received later by the re-ordering entity.

[**0197**] Thus, a determination is made whether or not a delay timer has been started for the current packet (step **1126**). If the answer is no, then the process terminates. Otherwise, a determination is made whether or not there is a hole to the left of the current packet (step **1128**). If the answer is no, then the delay timer for the current packet is canceled, since this would indicate that the current packet completely fills the hole, in which case the delay timer does not need to be maintained (step **1130**). Otherwise, if the current packet does not fill a hole, then no action is performed with respect to the delay timer. In either case, the process then terminates.

[**0198**] Back in step **1114**, if the current packet is a new packet, then the state of this packet is set to Received (step **1140**). The MaskVector for each Missing packet in the window is then updated and checked, and packets may be flushed by the re-ordering entity to higher layers as a result, as described above for step **1120** (step **1142**). The window is then moved forward by setting the leading edge of the window, or RxLeadWinEdge, to TSNr (step **1144**). All Received packets outside the window are then delivered to higher layers (step **1146**), the state of all packets outside the window is set to Expected (step **1148**), and all delay timers that have been set for packets outside the window are stopped (step **1150**). Received packets (if any) not currently stalled by a hole are delivered to higher layers (**1152**). This may be performed as described above for step **1124**.

[**0199**] A determination is then made whether or not a hole exists just to the left of the current packet (step **1154**). This determination can be made by checking whether the state of the packet with TSNr−1 is Expected. If the answer is no, then the process terminates. Otherwise, if there is a hole, then a delay timer is started for the last packet in the hole (i.e., with TSNr−1) (step **1156**). Each Expected packet in this hole is then set to Missing, and the MaskVector for each such packet is initialized by setting the element corresponding to HARQ channel Hx to "0" and all other elements to "1" (step **1158**). The process then terminates.

[**0200**] For the embodiment described above, one delay timer is used for all Missing packets in each original hole (i.e., a hole detected with a new packet that moves the window forward). This timer is associated with the last Missing packet in the hole but is applicable to (or referenced by) all of the Missing packets in the hole. In one implementation, a timer_over flag is used for each Missing packet to indicate whether or not its applicable delay timer (i.e., the first delay timer to the right of the packet) has expired. When the original hole is detected, the timer_over flag for each Missing packet in the hole may be reset to "0" to indicate that the applicable delay timer has not expired (step **1158**). And when the delay timer expires, the timer_over flags for all Missing packets covered by this timer are set to "1", and MaskVectors of all these Missing packets are also modified, as described above, to removed HARQ channels that are not active at this time or used for another priority queue. This implementation is described in further detail below.

[**0201**] The MaskVectors for the Missing packets are updated/revised based on various events such as (1) whenever the HARQ entity indicates that a packet transaction on a given HARQ channel is completed, and (2) when each delay timer maintained for an associated a Missing packet expires.

[**0202**] **FIG. 11C** shows a flow diagram of an embodiment of a process **1160** performed by the receiver re-ordering entity whenever an indication is received that a delay timer has expired. Initially, a determination is made whether or not a delay timer has expired (step **1162**). If the answer is no, then the process terminates. Otherwise, if a delay timer has expired, then the TSN of the Missing packet associated with the expired delay timer is determined and denoted as TSNe (step **1164**). Multiple Missing packets may rely on this delay timer since only one is maintained for all missing packets in each original hole, as described above. The timer_over flag for each Missing packet covered by this expired delay timer

is then set to "1" to indicate the timer for packet has expired (step **1166**). The Missing packets covered by this expired delay timer include those with TSN earlier than TSNe. The MaskVector for each Missing packet covered by this delay timer is then "modified" (i.e., to revise the candidate set for the Missing packet) (step **1168**). To modify the MaskVector for a Missing packet, each HARQ channel is considered, and if the channel is not Active or if the channel is used for another priority queue, then the corresponding element in the MaskVector is set to "0". The HARQ channels corresponding to the elements in the MaskVector that are still set to "1" are the remaining candidate HARQ channels at this time. If a MaskVector is revised, then it is checked to determine whether or not packets should be flushed to higher layers. The process then terminates.

[**0203**] **FIG. 11D** shows a flow diagram of an embodiment of a process **1170** performed by the receiver re-ordering entity for a completed transaction on a particular HARQ channel. Initially, determination is then made whether an indication has been received from the receiver HARQ entity that a packet transaction has been completed on an HARQ channel (step **1172**). If the answer is yes, then for each Missing packet for which the applicable delay timer has expired (i.e., with the timer_over flag reset to "0"), the element in the MaskVector corresponding to the HARQ channel is set to "0" (step **1174**). Again, if a MaskVector is updated, then it is checked to determine whether or not packets should be flushed to higher layers. The processing to be performed for a completed transaction on an HARQ channel is described in further detail in the pseudo-code below. The process then terminates.

[**0204**] In the embodiment described above, each receiver re-ordering entity is able to start multiple delay timers, one for each original hole detected within the window. In another embodiment, each re-ordering entity can have one delay timer running at any given moment. Whenever an original hole is detected, the delay timer for the re-ordering entity can be started if it is not currently running. If another original hole is subsequently detected while the delay timer is running, then no delay timer is started at that moment for the Missing packets in the second original hole. If the delay timer thereafter expires, then the Missing packets covered by this delay timer (i.e., the Missing packets with TSNs earlier than the TSNe of the Missing packet associated with the delay timer) are updated as shown in steps **1162** through **1166** in **FIG. 11C**. In addition (after step **1166**), a determination is made whether or not there are any Missing packets with TSNs later than TSNe. If the answer is yes, then the delay timer is started again and associated with the latest Missing packet.

[**0205**] This alternative embodiment reduces the number of delay timers needed to be maintained by each re-ordering entity to one. However, this embodiment may double the delay timer value for a Missing packet in the worse case. For example, the delay timer may be started for a first Missing packet, and a second Missing packet may be detected in the next transmission interval. The delay timer for the second Missing packet cannot be started until the delay timer for the first Missing packet expires. The second Missing packet would then need to wait for the expiration of the delay timer for both the first Missing packet plus the second Missing packet. This alternative embodiment is described in further detail in the pseudo-codes shown below.

[**0206**] **FIG. 12** shows a flow diagram of an overall process **1200** performed by a re-ordering entity to receive packets from the HARQ entity and deliver packets to higher layers. Initially, packets that have been decoded correctly are received from the HARQ entity (step **1212**). Missing packets among the received packets are then detected (step **1214**). This may be achieved based on the TSNs of the received packets as described above. If missing packets are detected, then delivery of received packets later than the detected missing packets to higher layers is stalled (step **1216**). A determination is then made for each missing packet whether it is either (1) subsequently received from the HARQ entity or (2) lost, by successively eliminating HARQ channels that may be used to send the missing packet, as also described above (step **1218**). Received packets that have been stalled by each missing packet are thereafter delivered to higher layers after the missing packet is determined to be lost or received from the HARQ entity (step **1220**).

[**0207**] Pseudo-codes for a specific implementation of the processes described above in **FIGS. 8 through 11**C are shown below.

Transmitter HARQ Entity

[**0208**] When scheduled for a (re)transmission for a particular priority queue, the transmitter:

[**0209**] 1—if this is the first transmission for the packet:

[**0210**] 2—toggle the New Data indicator;

[**0211**] 1—set the QueueID field to the priority queue of the packet being transmitted;

[**0212**] 1—end the procedure.

[**0213**] When receiving an ACK:

[**0214**] 1—discard the current packet being transmitted;

[**0215**] 1—indicate to the scheduler that this HARQ entity is available;

[**0216**] 1—end the procedure.

Receiver HARQ Entity

[**0217**] Upon reception of a control channel transmission sent for the receiver:

[**0218**] 1—if the control message contains a flushing indication:

[**0219**] 2—handle the flushing indication for the priority queue indicated in the QueueID field (see below);

[**0220**] 2—end the procedure.

[**0221**] 1—start/restart the inactivity timer (TM**1**) for the HARQ channel identified by the control message;

[**0222**] 1—if the identified HARQ channel is in Inactive state:

[**0223**] 2—if CurrNewData has the same value as the New Data indicator:

[**0224**] 3—discard the received packet;

[**0225**] 3—send an ACK on the uplink;

[**0226**] 3—end the procedure.

[0227] 2—else:

[0228] 3—set the HARQ channel to Active state;

[0229] 3—set CurrNewData to the value of the New Data indicator;

[0230] 3—set CurrQueueID to the value of the Queue ID field;

[0231] 3—store the received packet transmission in a soft buffer;

[0232] 1—else (if the HARQ channel is in Active state):

[0233] 2—if CurrNewData=New Data indicator:

[0234] 3—soft combine the received packet with the accumulated prior transmissions in the soft buffer;

[0235] 2—else:

[0236] 3—discard the data currently in the soft buffer;

[0237] 3—indicate to the re-ordering entity corresponding to CurrQueueID that the packet transaction is completed (see below);

[0238] 3—set CurrNewData to the value of the New Data indicator;

[0239] 3—set CurrQueueID to the value of the Queue ID field;

[0240] 3—store the received packet transmission in the soft buffer;

[0241] 1—attempt to decode the packet in the soft buffer;

[0242] 1—if the decoding is successful:

[0243] 2—send an ACK on the uplink;

[0244] 2—set the HARQ channel to Inactive state;

[0245] 2—deliver the recovered packet to the re-ordering entity corresponding to CurrQueueID (see below);

[0246] 1—else:

[0247] 2—send a NAK on the uplink;

[0248] 1—end the procedure.

[0249] Upon expiration of inactivity timer (TM1) for a given HARQ channel:

[0250] 1—discard the data currently in the soft buffer;

[0251] 1—indicate to the re-ordering entity corresponding to CurrQueueID that the packet transaction is over (see below);

[0252] 1—set the HARQ channel to Inactive state;

[0253] 1—end the procedure.

[0254] Upon reception of a flushing indication for a given priority queue:

[0255] 1—for each HARQ channel with CurrQueueID equal to the Queue ID value in the control message for the flushing indication:

[0256] 2—do not attempt to receive data;

[0257] 2—discard the data in the soft buffer;

[0258] 2—set the HARQ channel to Inactive state;

[0259] 2—indicate to the re-ordering entity corresponding to CurrQueueID that the packet transaction is over;

[0260] 1—end the procedure.

Transmitter Re-Ordering Entity

[0261] When the associated priority queue is scheduled for transmission, the transmitter re-ordering entity:

[0262] 1—increment TxLeadWinEdge;

[0263] 1—set the TSN for the new packet to TxLeadWinEdge;

[0264] 1—discard any pending packets with TSN≦TxLeadWinEdge−WindowSize;

[0265] 1—submit the new packet to the HARQ entity designated by the scheduler;

[0266] 1—end the procedure.

Receiver Re-Ordering Entity

For the Embodiment wherein One Delay Timer is Maintained for Each Original Hole

[0267] When a new packet with TSNr is delivered by the HARQ entity, the receiver re-ordering entity:

[0268] 1—if the received packet is within the receiving window (RxLeadWinEdge−WindowSize≦TSNr<RxLeadWinEdge):

[0269] 2—for each TSNi in state Missing:

[0270] 3—if TSNi<TSNr:

[0271] 4—set the element in MaskVector corresponding to this HARQ channel to "0";

[0272] 4—if all the elements in MaskVector are equal to 0:

[0273] 5—perform flushing procedure (see below) for TSNi

[0274] 2—if the state of TSNr is Received or Delivered:

[0275] 3—discard the received packet;

[0276] 2—else (the state for TNSr is Missing):

[0277] 3—if the state of all packets within the receiving window with TSN<TSNr is Delivered then:

[0278] 4—if a delay timer (TM2) associated with TSNr is started then stop the timer;

[0279] 4—deliver the packet to higher layers;

[0280] 4—set the state of TSNr to Delivered;

[0281] 4—for each TSNj inside the receiving window, starting with TSNr+1:

[0282] 5—if the state of TSNj is Expected or Missing:

[0283] 6—stop iterating over TSNj.

[0284] 5—else, if the state of TSNj is Received:

[0285] 6—deliver the data for TSNj to higher layer;

[0286] 6—set the state of TSNj to Delivered;

[0287] 6—if a delay timer is associated with TSNj, then stop the timer;

[0288] 6—go to next TSNj;

[0289] 3—else:

[0290] 4—set the state of TSNr to Received;

[0291] 1—else (received packet is outside the receiving window):

[0292] 2—for each TSNi in state Missing:

[0293] 3—set the element in MaskVector corresponding to this HARQ channel to "0";

[0294] 3—if all the elements in MaskVector are equal to "0":

[0295] 4—perform flushing procedure for TSNi

[0296] 2—set RxLeadWinEdge to TSNr;

[0297] 2—deliver to higher layers all the data associated with TSNs outside the receiver window with state Received;

[0298] 2—stop all delay timer TM2 associated with TSNs outside the receiver window;

[0299] 2—set the state for all TSNs outside the receiver window to Expected;

[0300] 2—if the state of all packets within the receiving window with TSN<TSNr is Received or Delivered then:

[0301] 3—deliver the packets to higher layers;

[0302] 3—set the state of TSNr to Delivered;

[0303] 2—else:

[0304] 3—set the state of TSNr to Received;

[0305] 3—start a delay timer TM2 associated with TSNr−1;

[0306] 3—for each TSNj inside the receiving window with TSNj<TSNr with state Expected:

[0307] 4—set the state of TSNj to Missing;

[0308] 4—reset the timer_over flag to "0";

[0309] 4—in the MaskVector associated with TSNj:

[0310] 5—set the element corresponding to this HARQ channel to "0";

[0311] 5—set the elements corresponding to other HARQ channels to "1";

[0312] 1—end the procedure;

[0313] When the HARQ entity indicates that a packet transaction is over for a particular HARQ channel:

[0314] 1—for each TSNi in state Missing for which the timer_over flag is set to 1:

[0315] 2—set the element in MaskVector corresponding to this HARQ channel to "0";

[0316] 2—if all the elements in MaskVector are equal to "0":

[0317] 3—perform flushing procedure for TSNi

[0318] 1—end the procedure

[0319] When a delay timer (TM2) expires:

[0320] 1—consider each TSN in state Missing, with TSN<=to the TSN associated with the timer:

[0321] 2—set the timer_over flag to "1";

[0322] 2—consider the MaskVector variable for this TSN;

[0323] 2—for each HARQ entity:

[0324] 3—if the HARQ entity is not in Active state or CurrQueueID is different from the priority queue of this re-ordering entity:

[0325] 4—set the element of the MaskVector corresponding to this HARQ channel to "0";

[0326] 1—end the procedure;

[0327] Flushing Procedure—when all the elements in MaskVector for TSNi are equal to "0":

[0328] 1—for each TSNj within the receiving window and earlier than or equal to TSNi:

[0329] 2—if the state of TSNj is Received then deliver the associated data to higher layer;

[0330] 2—set the state of TSNj to Delivered;

[0331] 1—for each TSNj inside the receiving window, starting with TSNi+1:

[0332] 2—if the state of TSNj is Expected or Missing:

[0333] 3—stop iterating over TSNj.

[0334] 2—else, if the state of TSNj is Received:

[0335] 3—deliver the associated data to higher layer;

[0336] 3—set the state of TSNj to Delivered;

[0337] 3—go to next TSNj;

[0338] 1—return;

For the Embodiment wherein One Delay Timer is Maintained for each Re-Ordering Entity

[0339] When a new packet with TSNr is delivered by the HARQ entity, the receiver re-ordering entity:

[0340] 1—if the received packet is within the receiving window (RxLeadWinEdge−WindowSize≦TSNr<RxLeadWinEdge):

[0341] 2—for each TSNi in state Missing:

[0342] 3—if TSNi<TSNr:

[0343] 4—set the element in MaskVector corresponding to this HARQ channel to "0";

[0344] 4—if all the elements in MaskVector are equal to 0:

[0345] 5—perform flushing procedure (see below) for TSNi

[0346] 2—if the state of TSNr is Received or Delivered:

[0347] 3—discard the received packet;

[0348] 2—else (the state for TNSr is Missing):

[0349] 3—if the state of all packets within the receiving window with TSN<TSNr is Delivered then:

[0350] 4—if a delay timer (TM2) associated with TSNr is started then stop the timer;

[0351] 4—deliver the packet to higher layers;

[0352] 4—set the state of TSNr to Delivered;

[0353] 4—for each TSNj inside the receiving window, starting with TSNr+1:

[0354] 5—if the state of TSNj is Expected or Missing:

[0355] 6—stop iterating over TSNj.

[0356] 5—else, if the state of TSNj is Received:

[0357] 6—deliver the data for TSNj to higher layer;

[0358] 6—set the state of TSNj to Delivered;

[0359] 6—if a delay timer is associated with TSNj, then stop the timer;

[0360] 6—go to next TSNj;

[0361] 3—else:

[0362] 4—set the state of TSNr to Received;

[0363] 1—else (received packet is outside the receiving window):

[0364] 2—for each TSNi in state Missing:

[0365] 3—set the element in MaskVector corresponding to this HARQ channel to "0";

[0366] 3—if all the elements in MaskVector are equal to "0":

[0367] 4—perform flushing procedure for TSNi

[0368] 2—set RxLeadWinEdge to TSNr;

[0369] 2—deliver to higher layers all the data associated with TSNs outside the receiver window with state Received;

[0370] 2—stop all delay timer TM2 associated with TSNs outside the receiver window;

[0371] 2—set the state for all TSNs outside the receiver window to Expected;

[0372] 2—if the state of all packets within the receiving window with TSN<TSNr is Received or Delivered then:

[0373] 3—deliver the packets to higher layers;

[0374] 3—set the state of TSNr to Delivered;

[0375] 2—else:

[0376] 3—set the state of TSNr to Received;

[0377] 3—if the delay timer TM2 for this re-ordering entity is not running, then:

[0378] 4—start a delay timer TM2 associated with TSNr−1;

[0379] 3—for each TSNj inside the receiving window with TSNj<TSNr with state Expected:

[0380] 4—set the state of TSNj to Missing;

[0381] 4—reset the timer_over flag to "0";

[0382] 4—in the MaskVector associated with TSNj:

[0383] 5—set the element corresponding to this HARQ channel to "0";

[0384] 5—set the elements corresponding to other HARQ channels to "1";

[0385] 1—end the procedure;

[0386] When the HARQ entity indicates that a packet transaction is over for a particular HARQ channel:

[0387] 1—for each TSNi in state Missing for which the timer_over flag is set to 1:

[0388] 2—set the element in MaskVector corresponding to this HARQ channel to "0";

[0389] 2—if all the elements in MaskVector are equal to "0":

[0390] 3—perform flushing procedure for TSNi

[0391] 1—end the procedure

[0392] When a delay timer (TM2) expires:

[0393] 1—consider each TSN in state Missing, with TSN<=to the TSN associated with the timer:

[0394] 2—set the timer_over flag to "1";

[0395] 2—consider the MaskVector variable for this TSN;

[0396] 2—for each HARQ entity:

[0397] 3—if the HARQ entity is not in Active state or CurrQueueID is different from the priority queue of this re-ordering entity:

[0398] 4—set the element of the MaskVector corresponding to this HARQ channel to "0";

[0399] 1—if there is any TSN in state Missing:

[0400] 2—start the delay timer and associated it with the TSN of the latest packet in state Missing;

[0401] 1—end the procedure;

[0402] Flushing Procedure—when all the elements in MaskVector for TSNi are equal to "0":

[0403] 1—for each TSNj within the receiving window and earlier than or equal to TSNi:

[0404] 2—if the state of TSNj is Received then deliver the associated data to higher layer;

[0405] 2—set the state of TSNj to Delivered;

[0406] 1—for each TSNj inside the receiving window, starting with TSNi+1:

[0407] 2—if the state of TSNj is Expected or Missing:

[0408] 3—stop iterating over TSNj.

[0409] 2—else, if the state of TSNj is Received:

[0410] 3—deliver the associated data to higher layer;

[0411] 3—set the state of TSNj to Delivered;

[0412] 3—go to next TSNj;

[0413] 1—return;

[0414] The pseudo-code for a specific implementation is shown above to provide a clearer understanding of the processing performed by various entities at the transmitter and receiver. Other implementations may also be contemplated, as would be recognized by one skilled in the art based on the teachings described herein, and these various other implementations are also within the scope of the invention.

[0415] The techniques described herein may be used to provide improved stall avoidance performance for systems having an underlying retransmission mechanism (e.g., HARQ) and higher layers that require data in sequential order. These techniques may be used for various communication systems such as, for example, W-CDMA systems, cdma2000 systems, and so on. These techniques may also be used for other types of communication systems (e.g., TDMA and FDMA systems).

[0416] **FIG. 13** is a block diagram of an embodiment of Node B **104** and UE **106**. On the downlink, data for the HS-DSCH and HS-SCCH for a particular UE designated to receive HSDPA transmission is received and processed (e.g., formatted, encoded, and so on) by a transmit (TX) data processor **1312**. The processing for the HS-DSCH and HS-SCCH may be performed as described in the applicable standard documents for W-CDMA Release 5, including TS.25-321 V5.0.0, TS.25-308 V5.2.0, and 25-212 V5.0.0, which are all incorporated herein by reference. These and other documents for W-CDMA Release 5 are publicly available.

[0417] The processed data is then provided to a modulator (MOD) **1314** and further processed (e.g., channelized, spread, and so on) to provide modulated data. A transmitter (TMTR) unit **1316** then converts the modulated data into one or more analog signals, which are further conditioned (e.g., amplified, filtered, and frequency upconverted) to provide a downlink signal. The downlink signal is routed through a duplexer (D) **1322** and transmitted via an antenna **1324** to the designated UE.

[0418] At the UE, the downlink signal is received by an antenna **1352**, routed through a duplexer **1354**, and provided to a receiver (RCVR) unit **1356**. Receiver unit **1356** conditions (e.g., filters, amplifies, and frequency downconverts) the received signal and further digitizes the conditioned signal to provide samples. A demodulator **1358** then receives and processes (e.g., despreads, channelizes, and data demodulates) the samples to provide symbols. Demodulator **1358** may implement a rake receiver that can process multiple instances (or multipath components) of the received signal to provide combined symbols. A receive (RX) data processor **1360** then decodes the symbols, checks the received packets, and provides the decoded data. The processing by demodulator **1358** and RX data processor **1360** is complementary to the processing by modulator **1314** and TX data processor **1312**, respectively.

[0419] In one embodiment, RX data processor **1360** performs the processing for the physical layer and part of the MAC layer (e.g., the HARQ entity), and a controller **1370** performs some of the processing for the MAC layer (e.g., the re-ordering entity) and further implements part of HARQ. For this embodiment, RX data processor **1360** may provide (1) the decoded data for each packet decoded correctly, (2) the status of each packet transmission (e.g., ACK or NAK), (3) indications of expired inactivity and delay timers, and so on. Controller **1370** may then detect for missing packets and provide packets to higher layers as they are received and available. Controller **1370** further provides to a TX data processor **1382** the appropriate ACK/NAK feedback for the HARQ operation.

[0420] On the uplink, data for the uplink and ACK/NAK feedback information are processed (e.g., formatted, encoded, and so on) by TX data processor **1382**, further processed (e.g., channelized, spread, and so on) by modulator **1384**, and conditioned (e.g., converted to analog signals, amplified, filtered, and frequency upconverted) by a transmitter unit **1386** to provide a uplink signal. The uplink signal is then routed through duplexer **1354** and transmitted via antenna **1352** to the base station.

[0421] At the Node B, the uplink signal is received by antenna **1324**, routed through duplexer **1322**, and provided to a receiver unit **1342**. Receiver unit **1342** conditions (e.g., frequency downconverts, filters, and amplifies) the received signal and further digitizes the conditioned signal to provide a stream of samples. A demodulator **1344** then processes (e.g., despreads, channelizes, and so on) the samples to provide symbols, and an RX data processor **1346** further processes the symbols to provide the decoded data for the UE. The data processing for the downlink and uplink is described by the W-CDMA standard documents.

[0422] A controller **1330** receives the ACK/NAK feedback from RX data processor **1346** and directs the retransmission of packets for HARQ, as necessary. Controllers **1330** and **1370** further control the processing at the Node B and the UE, respectively. Each controller may also be designed to implement all or a portion of the techniques described herein for HARQ transmission/retransmission. Program codes and data required by controllers **1330** and **1370** may be stored in memory units **1332** and **1372**, respectively.

[0423] The techniques described herein for improving stall avoidance performance may be implemented by various means. For example, these techniques may be implemented in hardware, software, or a combination thereof. For a hardware implementation, the elements used to implement the techniques (e.g., the elements that perform the processes shown in FIGS. **8** through and **11**A) may be implemented within one or more application specific integrated circuits (ASICs), digital signal processors (DSPs), digital signal processing devices (DSPDs), programmable logic devices (PLDs), field programmable gate arrays (FPGAs), processors, controllers, microcontrollers, microprocessors, other electronic units designed to perform the functions described herein, or a combination thereof.

[0424] For a software implementation, these techniques may be implemented with modules (e.g., procedures, functions, and so on) that perform the functions described herein. The software codes may be stored in a memory unit (e.g., memory units **1332** and **1372** in **FIG. 13**) and executed by a processor (e.g., controllers **1330** and **1370**). The memory

unit may be implemented within the processor or external to the processor, in which case it can be communicatively coupled to the processor via various means as is known in the art.

[0425] The previous description of the disclosed embodiments is provided to enable any person skilled in the art to make or use the present invention. Various modifications to these embodiments will be readily apparent to those skilled in the art, and the generic principles defined herein may be applied to other embodiments without departing from the spirit or scope of the invention. Thus, the present invention is not intended to be limited to the embodiments shown herein but is to be accorded the widest scope consistent with the principles and novel features disclosed herein.

What is claimed is:

1. In a CDMA communication system, a method for delivering data recovered by a hybrid automatic retransmission (HARQ) entity in proper order to higher layers, comprising:

receiving packets from the HARQ entity;

detecting for missing packets among the received packets;

stalling delivery of received packets later than the detected missing packets;

determining whether each missing packet is either subsequently received from the HARQ entity or lost by successively eliminating HARQ channels that may be used to send the missing packet; and

delivering received packets stalled by each missing packet after the missing packet is determined to be lost or received from the HARQ entity.

2. The method of claim 1, wherein an HARQ channel is eliminated if it is inactive for a particular time period.

3. The method of claim 1, wherein an HARQ channel is eliminated if a packet sent on the HARQ channel is recovered.

4. The method of claim 1, wherein an HARQ channel is eliminated if a new packet is detected to be sent on the HARQ channel.

5. The method of claim 1, wherein an HARQ channel is eliminated if an indication to flush the HARQ channel is received.

6. The method of claim 1, wherein each HARQ channel is identified by a field in a control message.

7. The method of claim 1, wherein the CDMA communication system is a W-CDMA system that implements Release 5 or later.

8. In a CDMA communication system, a method for delivering data recovered by a hybrid automatic retransmission (HARQ) entity in proper order to higher layers, comprising:

receiving packets from the HARQ entity;

detecting for missing packets among the received packets;

stalling delivery of received packets later than the detected missing packets; and

for each missing packet,

determining a set of candidate HARQ channels that may be used to send the missing packet,

removing each candidate HARQ channel in the set upon completion of a pending transaction on the HARQ channel,

declaring the missing packet to be lost if all candidate HARQ channels are removed from the set, and

delivering received packets stalled by the missing packet if the missing packet is declared to be lost or is subsequently received from the HARQ entity.

9. The method of claim 8, wherein the packets are transmitted in sequential order based on transmission sequence numbers (TSNs) assigned to the packets.

10. The method of claim 9, wherein the missing packets are detected based on the TSNs of the received packets.

11. The method of claim 8, wherein the set of candidate HARQ channels for each missing packet includes HARQ channels that are active at the time the missing packet is detected.

12. The method of claim 11, wherein an HARQ channel is deemed active if at least one packet transmission has been received on the HARQ channel.

13. The method of claim 8, wherein the set of candidate HARQ channels for each missing packet includes HARQ channels that are active at a time instant that is a particular delay from the time the missing packet is detected.

14. The method of claim 13, wherein the particular delay is determined by a timer that is started when the missing packet is detected.

15. The method of claim 14, wherein one timer is maintained for all missing packets detected at any given time.

16. The method of claim 13, wherein the particular delay is selected to ensure a high likelihood of receiving at least one packet transmission on an HARQ channel.

17. The method of claim 8, wherein the set of candidate HARQ channels for each missing packet is denoted by a mask vector having one element for each HARQ channel that may be used for packet data transmission.

18. The method of claim 8, wherein a pending transaction on an HARQ channel is deemed completed if the HARQ channel is inactive for a particular time period.

19. The method of claim 18, further comprising:

maintaining an inactivity timer for each HARQ channel with a pending transaction, wherein the pending transaction on the HARQ channel is deemed completed if the inactivity timer expires.

20. The method of claim 19, wherein the inactivity timer for each HARQ channel is restarted whenever a packet transmission is received on the HARQ channel.

21. The method of claim 18, wherein the particular time period is selected to ensure a high likelihood of receiving at least two packet transactions on the HARQ channel.

22. The method of claim 8, wherein a pending transaction on an HARQ channel is deemed completed if a packet is recovered from the HARQ channel.

23. The method of claim 8, wherein a pending transaction on an HARQ channel is deemed completed if a new packet is detected to be sent on the HARQ channel.

24. The method of claim 23, wherein the new packet is detected based on a change in a New Data indicator sent with each packet transaction.

25. The method of claim 8, wherein a pending transaction on an HARQ channel is deemed completed if an indication to flush the HARQ channel is received.

26. The method of claim 8, wherein the CDMA communication system is a W-CDMA system that implements Release 5 or later.

27. The method of claim 8, wherein the CDMA communication system is a cdma2000 system.

28. In a CDMA communication system, a method for delivering data recovered by a hybrid automatic retransmission (HARQ) entity in proper order to higher layers, comprising:

maintaining an inactivity timer for each of a plurality of HARQ channels that may be used for data transmission;

detecting for missing packets among received packets;

stalling delivery of received packets later than the detected missing packets; and

delivering received packets stalled by each missing packet after the missing packet is either received or determined to be lost based on the inactivity timers for HARQ channels.

29. The method of claim 28, wherein the inactivity timer for each HARQ channel is restarted whenever a packet transmission is received on the HARQ channel.

30. The method of claim 28, wherein the duration of each inactivity timer is selected to ensure a high likelihood of receiving at least two packet transactions on the HARQ channel.

31. A method for transmitting packet data in a CDMA communication system, comprising:

determining a priority of each packet to be transmitted;

forming a control message for each packet and having included therein the priority of the packet;

transmitting the packet on a data channel; and

transmitting the control message on a control channel that accompanies the data channel.

32. The method of claim 31, wherein the packets for each priority are transmitted in sequential order.

33. A method for processing a packet data transmission in a CDMA communication system with a hybrid automatic retransmission (HARQ) mechanism, comprising:

receiving a flushing indication for the packet data transmission;

identifying a set of one or more HARQ channels to be flushed by the flushing indication;

flushing each HARQ channel in the set; and

performing one or more tasks in response to the one or more HARQ channels in the set being flushed.

34. The method of claim 33, wherein the set includes one HARQ channel identified in a control message used to send the flushing indication.

35. The method of claim 33, wherein the set includes all HARQ channels used to send data for a particular priority, and wherein the particular priority is identified in a control message used to send the flushing indication.

36. The method of claim 33, wherein the set includes all HARQ channels that may be used for data transmission.

37. The method of claim 33, wherein the performing one or more tasks includes sending to higher layers packets that are waiting on the one or more HARQ channels that are flushed.

38. A memory communicatively coupled to a digital signal processing device (DSPD) capable of interpreting digital information to:

receive packets from a hybrid automatic retransmission (HARQ) entity;

detect for missing packets among the received packets;

stall delivery of received packets later than the detected missing packets;

determine whether each missing packet is lost or subsequently received from the HARQ entity by successively eliminating HARQ channels that may be used to send the missing packet; and

deliver received packets stalled by each missing packet after the missing packet is determined to be lost or is received from the HARQ entity.

39. An apparatus in a CDMA communication system with a hybrid automatic retransmission (HARQ) mechanism, comprising:

means for receiving packets from an HARQ entity;

means for detecting for missing packets among the received packets;

means for stalling delivery of received packets later than the detected missing packets;

means for determining whether each missing packet is lost or subsequently received from the HARQ entity by successively eliminating HARQ channels that may be used to send the missing packet; and

means for delivering received packets stalled by each missing packet after the missing packet is determined to be lost or is received from the HARQ entity

40. The apparatus of claim 39, wherein an HARQ channel is eliminated if it is inactive for a particular time period.

41. The apparatus of claim 39, wherein an HARQ channel is eliminated if a packet sent on the HARQ channel is recovered.

42. The apparatus of claim 39, wherein an HARQ channel is eliminated if a new packet is detected to be sent on the HARQ channel.

43. The apparatus of claim 39, wherein an HARQ channel is eliminated if an indication to flush the HARQ channel is received.

44. An apparatus in a CDMA communication system with a hybrid automatic retransmission (HARQ) mechanism, comprising:

means for maintaining an inactivity timer for each of a plurality of HARQ channels that may be used for data transmission;

means for detecting for missing packets among received packets;

means for stalling delivery of received packets later than the detected missing packets; and

means for delivering received packets stalled by each missing packet after the missing packet is either

received or determined to be lost based on the inactivity timers for HARQ channels.

45. A receiver in a CDMA communication system with a hybrid automatic retransmission (HARQ) mechanism, comprising:

a RX data processor operative to process a data transmission to provide recovered packets; and

a controller operative to

detect for missing packets among the recovered packets,

stall delivery of recovered packets later than the detected missing packets,

determine whether each missing packet is lost or subsequently recovered by successively eliminating HARQ channels that may be used to send the missing packet, and

deliver recovered packets stalled by each missing packet after the missing packet is determined to be lost or is subsequently recovered.

46. The receiver of claim 45, wherein an HARQ channel is eliminated if it is inactive for a particular time period.

47. The receiver of claim 45, wherein an HARQ channel is eliminated if a packet sent on the HARQ channel is recovered.

48. The receiver of claim 45, wherein an HARQ channel is eliminated if a new packet is detected to be sent on the HARQ channel.

49. The receiver of claim 45, wherein an HARQ channel is eliminated if an indication to flush the HARQ channel is received.

50. A terminal in a CDMA communication system with a hybrid automatic retransmission (HARQ) mechanism, comprising:

a RX data processor operative to process a data transmission to provide recovered packets; and

a controller operative to

detect for missing packets among the recovered packets,

stall delivery of recovered packets later than the detected missing packets,

determine whether each missing packet is lost or subsequently recovered by successively eliminating HARQ channels that may be used to send the missing packet, and

deliver recovered packets stalled by each missing packet after the missing packet is determined to be lost or is subsequently recovered.

51. The terminal of claim 50, wherein the CDMA communication system is a W-CDMA system that implements Release 5 or later.

* * * * *