US 20020044059A1

(19) United States

(12) Patent Application Publication

(10) Pub. No.: US 2002/0044059 A1

(43) Pub. Date: Apr. 18, 2002

Reeder et al.

(54) PATIENT POINT OF CARE COMPUTER SYSTEM

(76) Inventors: **Ryan A. Reeder**, Brookville, IN (US); **John D. Vogel**, Columbus, IN (US); **Otho Boone**, Amber, PA (US); **Phillip Hausman**, Cary, NC (US); **James Lestienne**, Chapel Hill, NC (US); **Michael W. Rothwell**, Cincinnati, OH (US); **Richard J. Schuman**, Cary, NC (US)

Correspondence Address:
Intellectual Property Group
Bose McKinney & Evans LLP
2700 First Indiana Plaza
135 North Pennsylvania Street
Indianapolis, IN 46204 (US)

(21) Appl. No.: **09/849,580**

(22) Filed: **May 4, 2001**

Related U.S. Application Data

(63) Non-provisional of provisional application No. 60/202,283, filed on May 5, 2000. Non-provisional of provisional application No. 60/229,136, filed on Aug. 30, 2000.

Publication Classification

(51) **Int. Cl.**[7] **G08B 23/00**

(52) **U.S. Cl.** **340/573.1**; 340/286.01

(57) **ABSTRACT**

A patient monitoring system comprises a computer, an input device coupled to the computer and configured to input patient information, and first and second display screens coupled to the computer. The computer displays a first portion of the patient information on the first display screen and a second portion of the patient information on the second display screen.

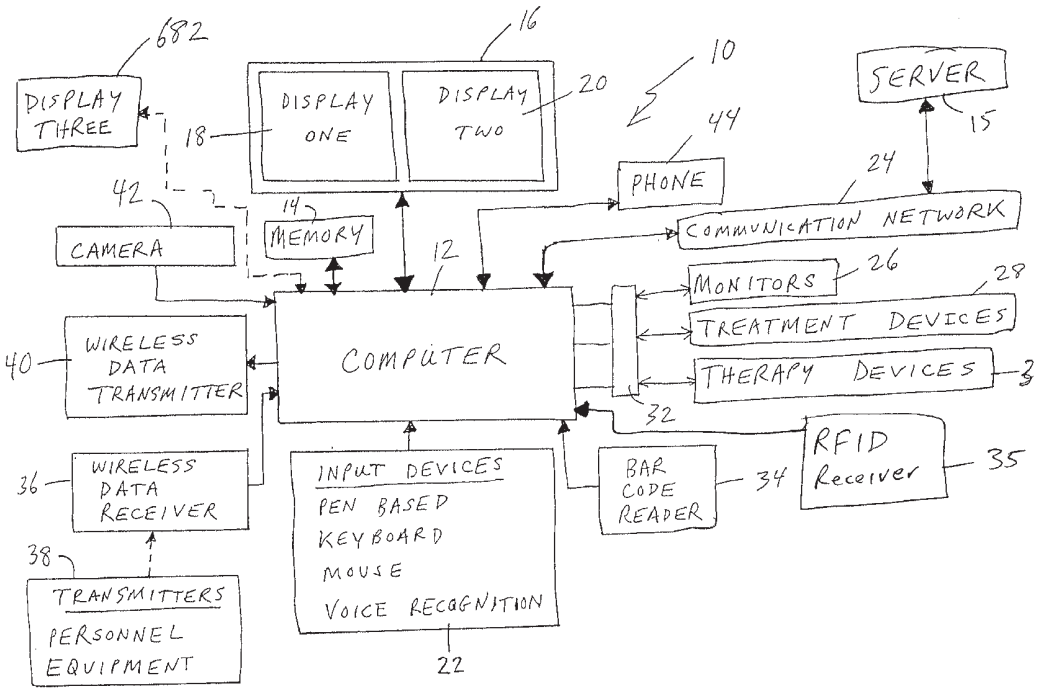

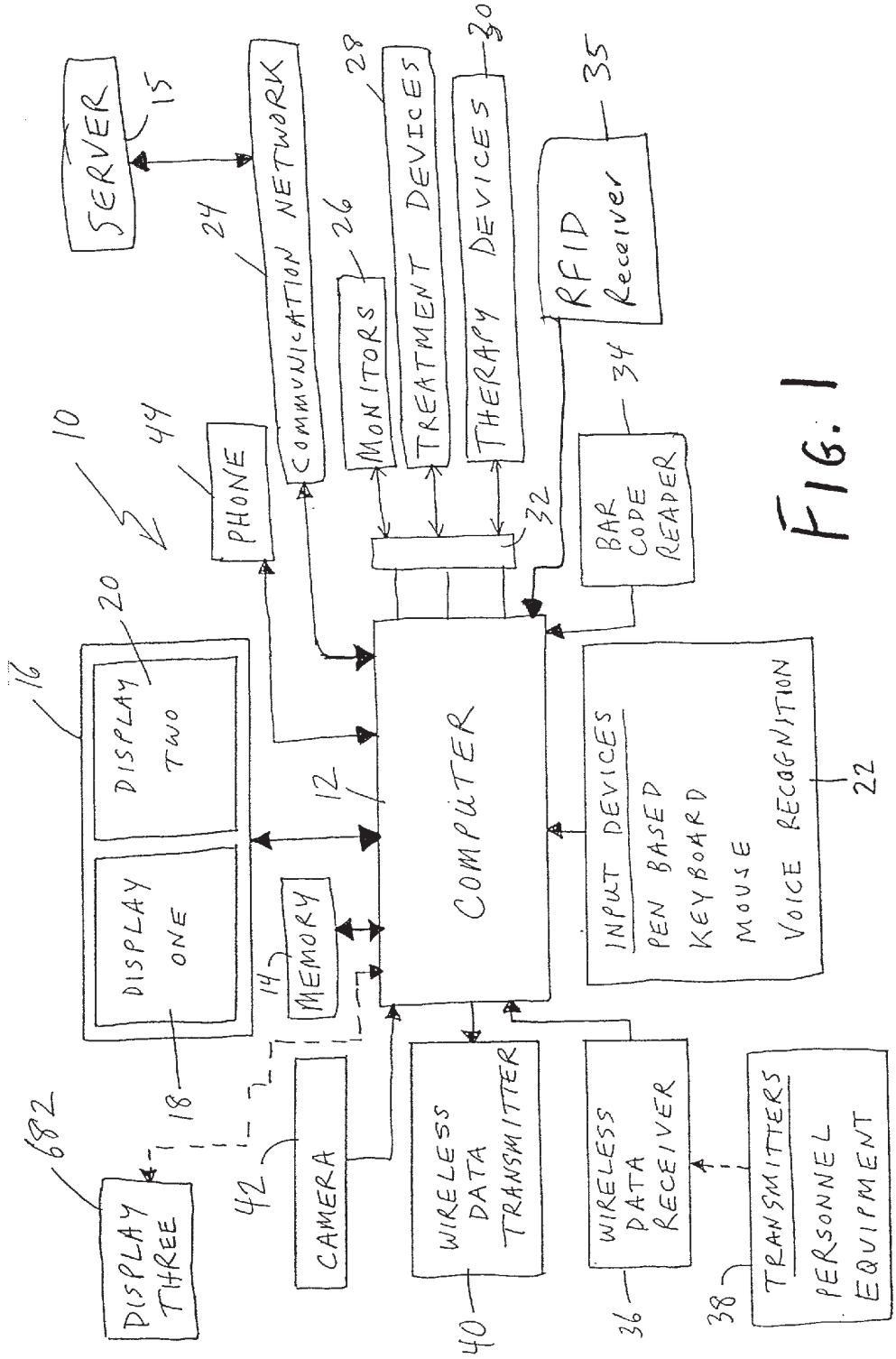
SERVER
15
COMMUNICATION NETWORK
24
MONITORS
26
TREATMENT DEVICES
28
THERAPY DEVICES
30
RFID Receiver
35
10
44
PHONE
32
BAR CODE READER
34
16
DISPLAY TWO
20
DISPLAY ONE
18
12
COMPUTER
MEMORY
14
INPUT DEVICES
PEN BASED
KEYBOARD
MOUSE
VOICE RECOGNITION
22
682
DISPLAY THREE
42
CAMERA
WIRELESS DATA TRANSMITTER
40
WIRELESS DATA RECEIVER
36
TRANSMITTERS
PERSONNEL EQUIPMENT
38

FIG. 1

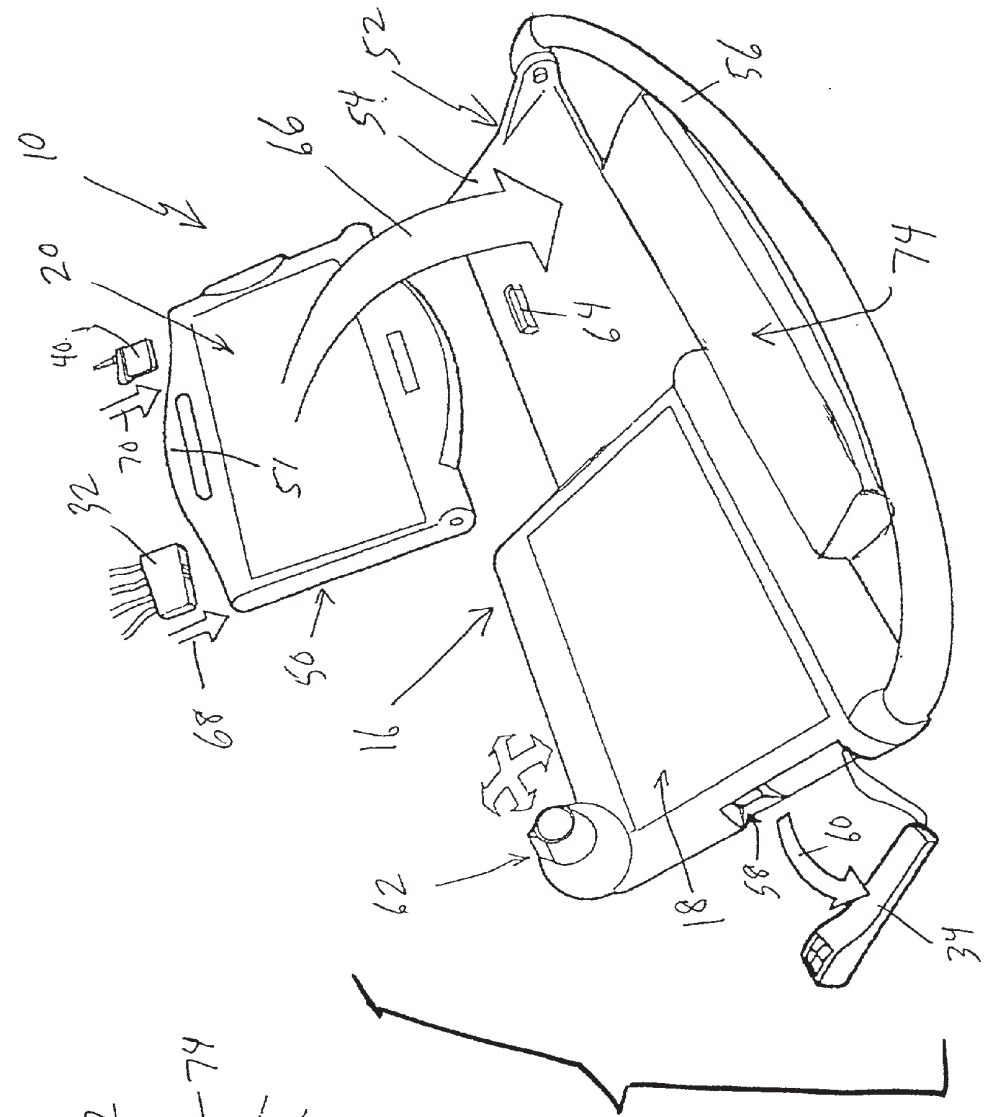
10
20
40
70
32
68
50
51
66
54
52
56
64
74
16
62
18
58
60
34

FIG. 2

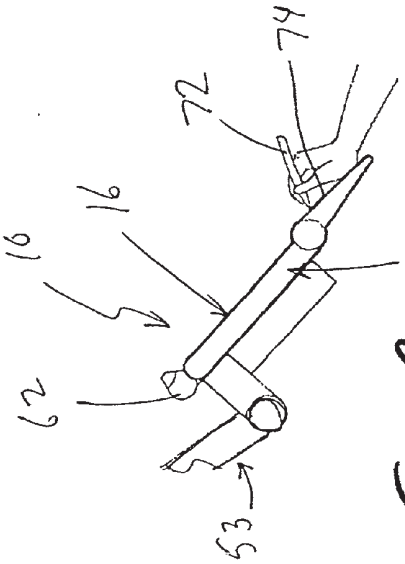
10
16
62
53
52
72
74

FIG. 3

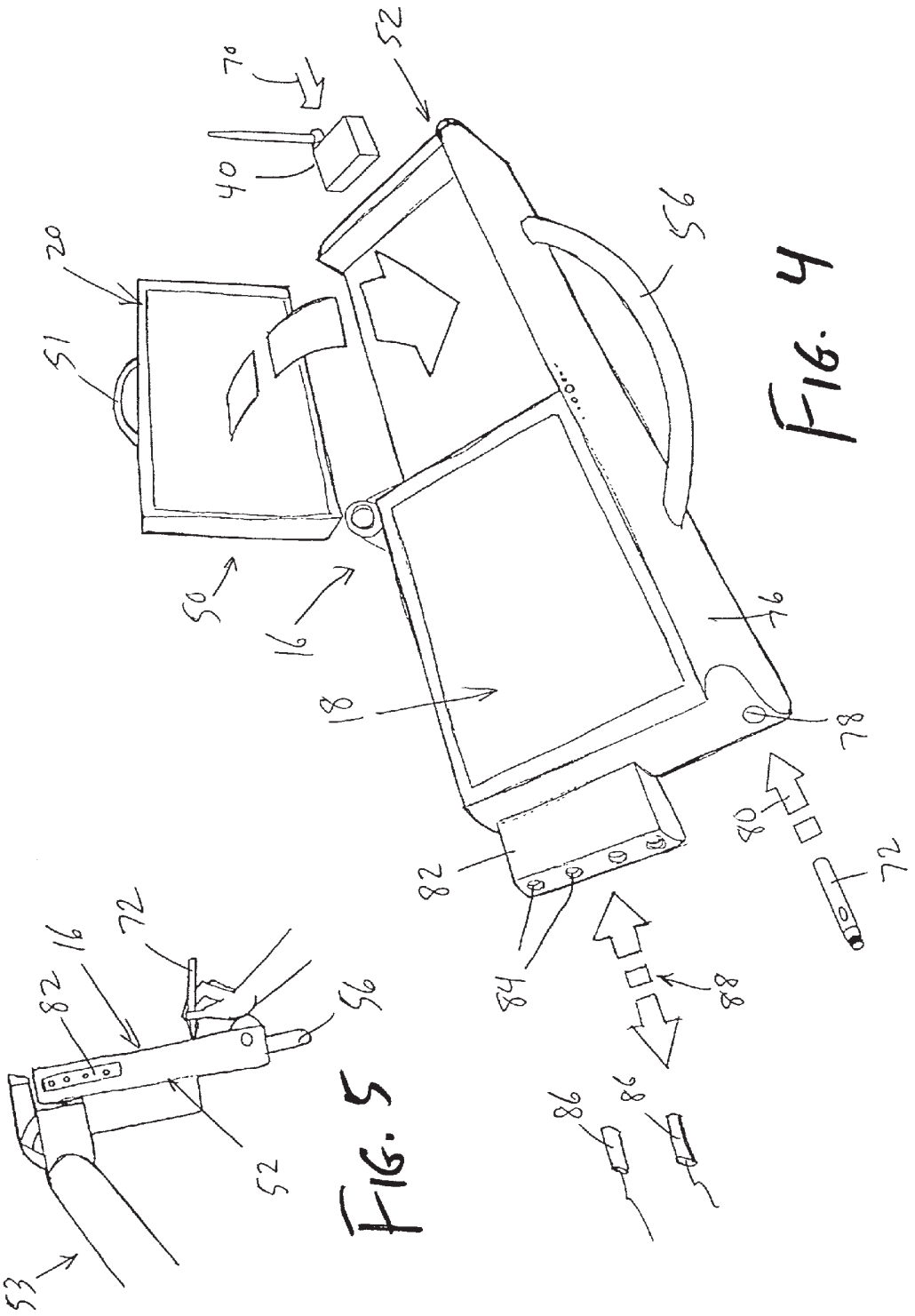

FIG. 4

FIG. 5

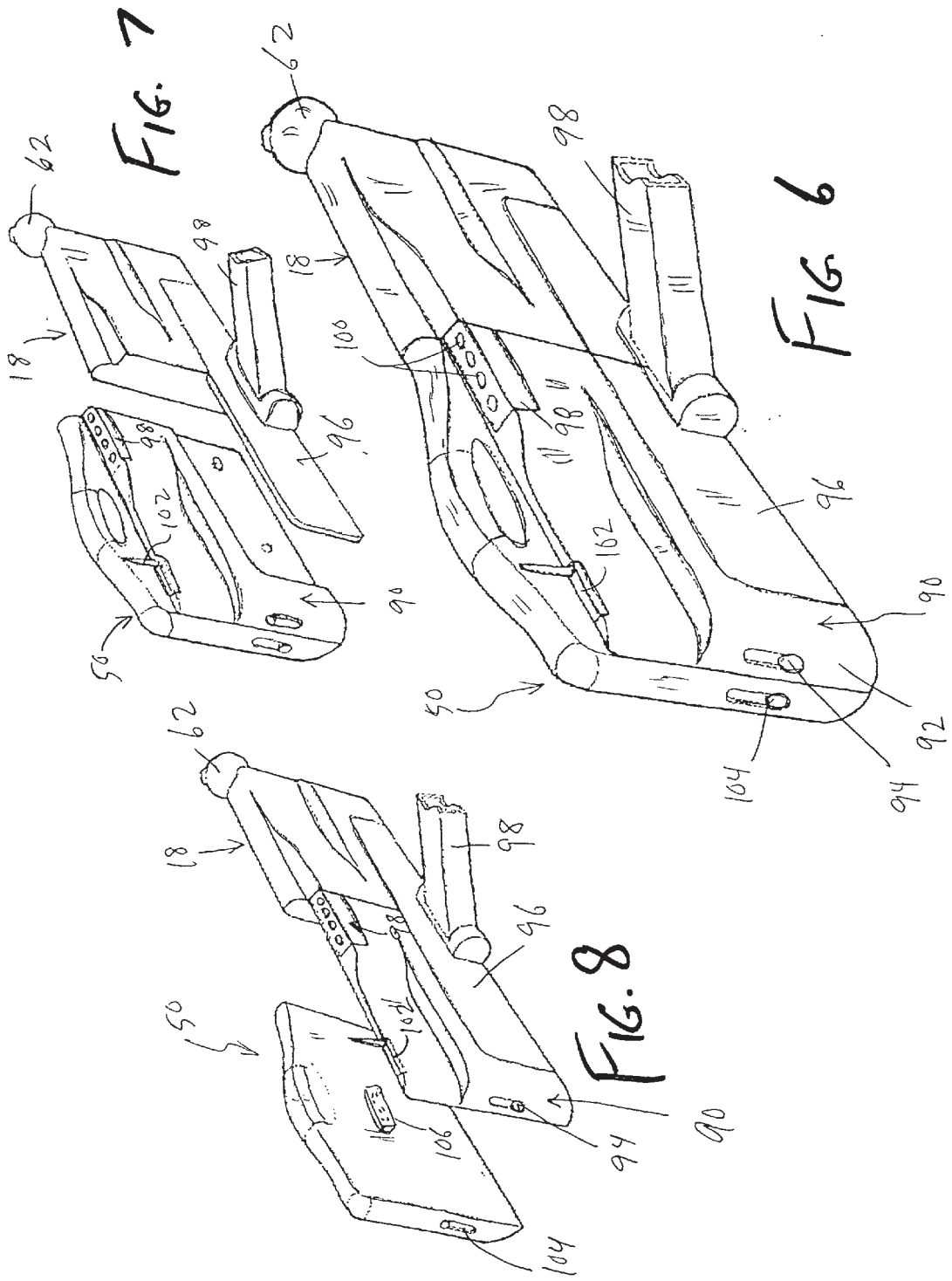

FIG. 7

FIG. 6

FIG. 8

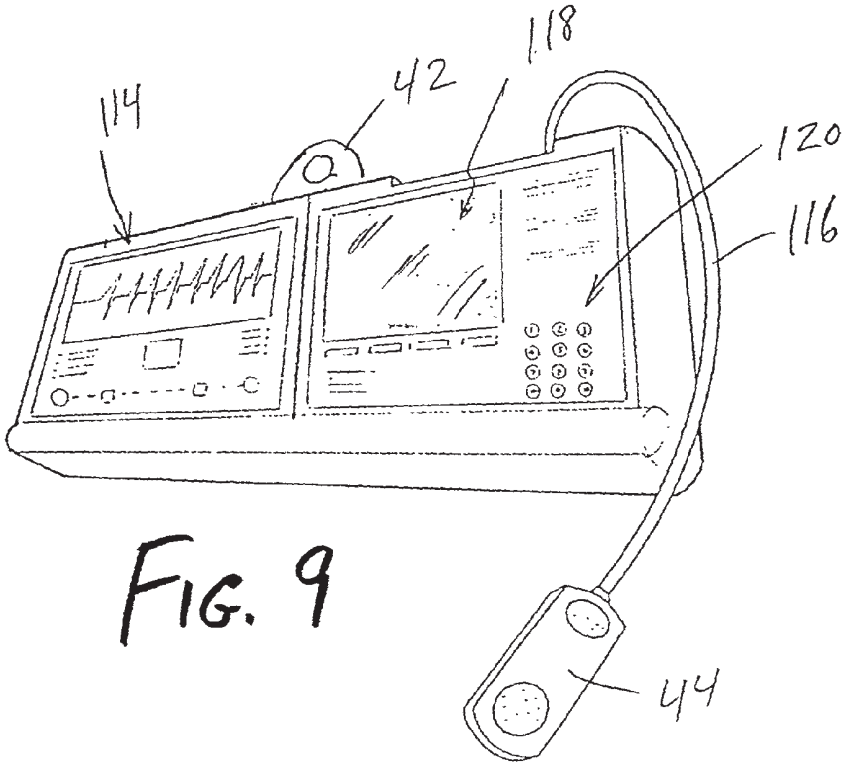

FIG. 9

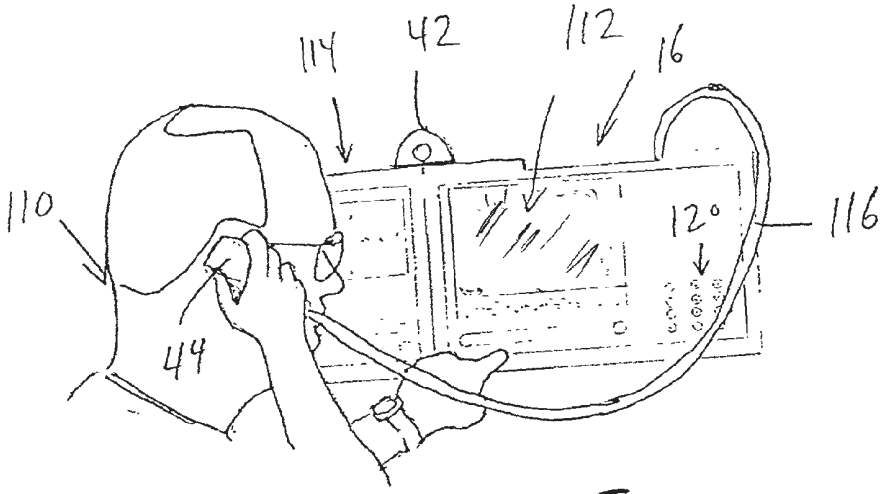

FIG. 10

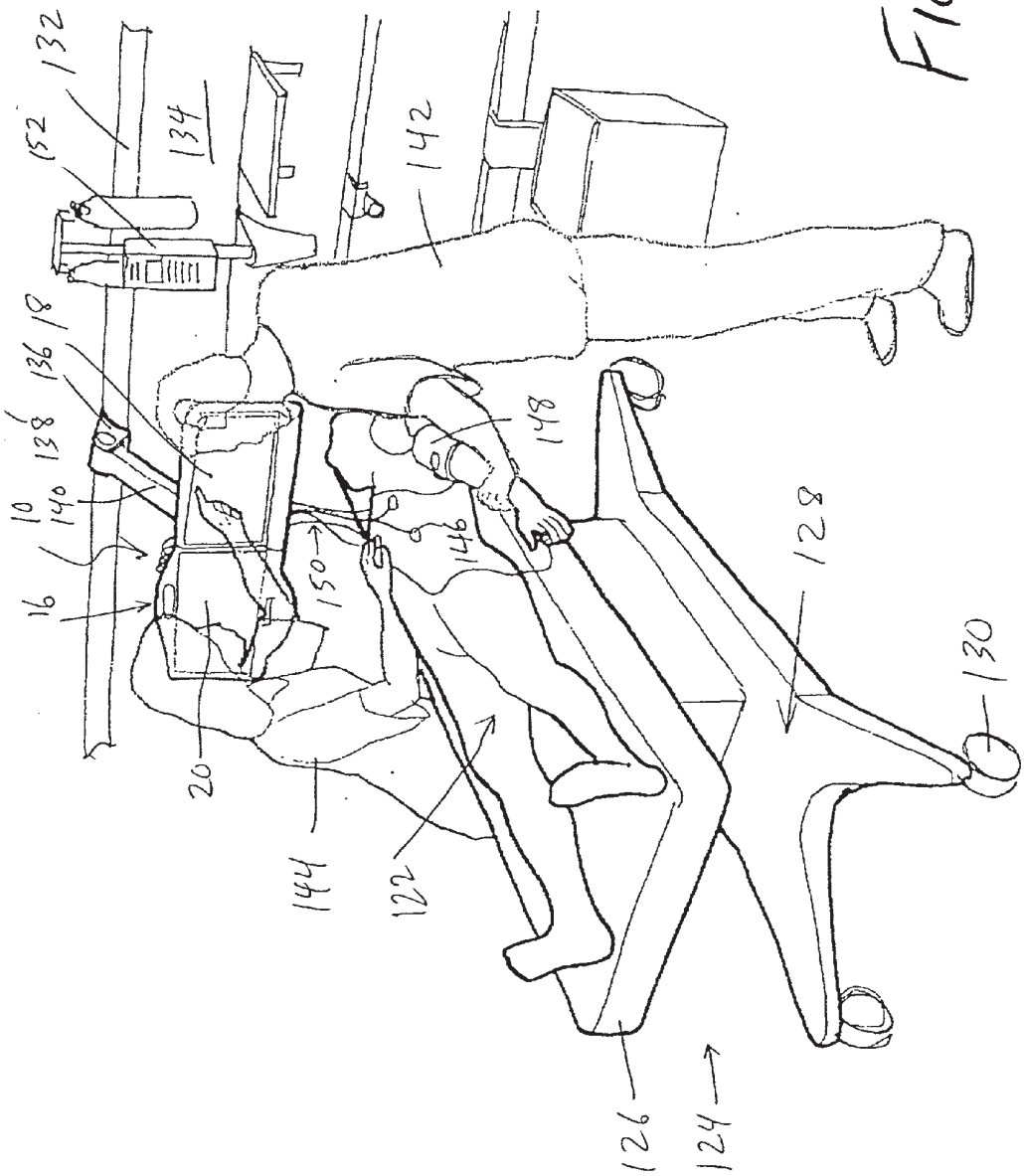
132
152
134
142
18
136
138
10
140
16
150
146
148
128
130
20
144
122
126
124

FIG. 11

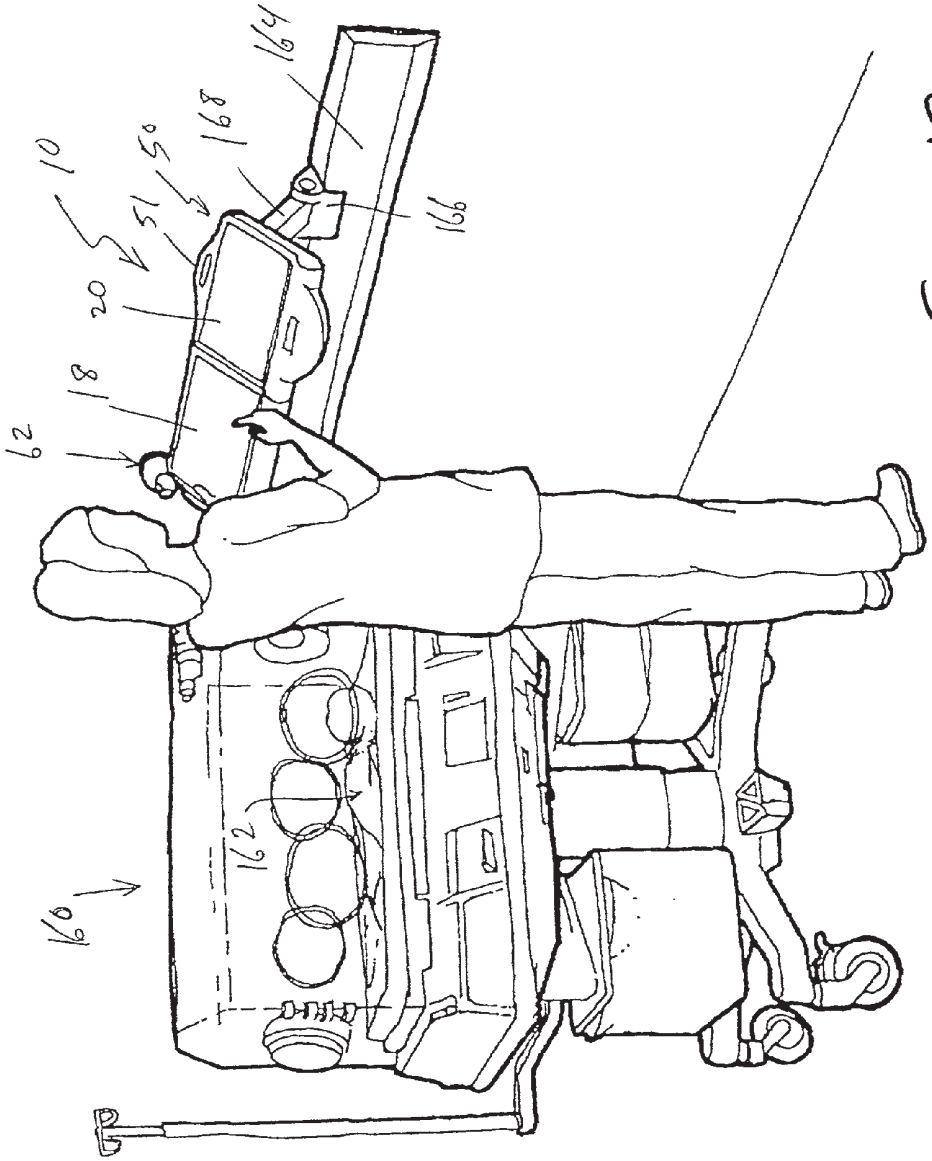

FIG. 12

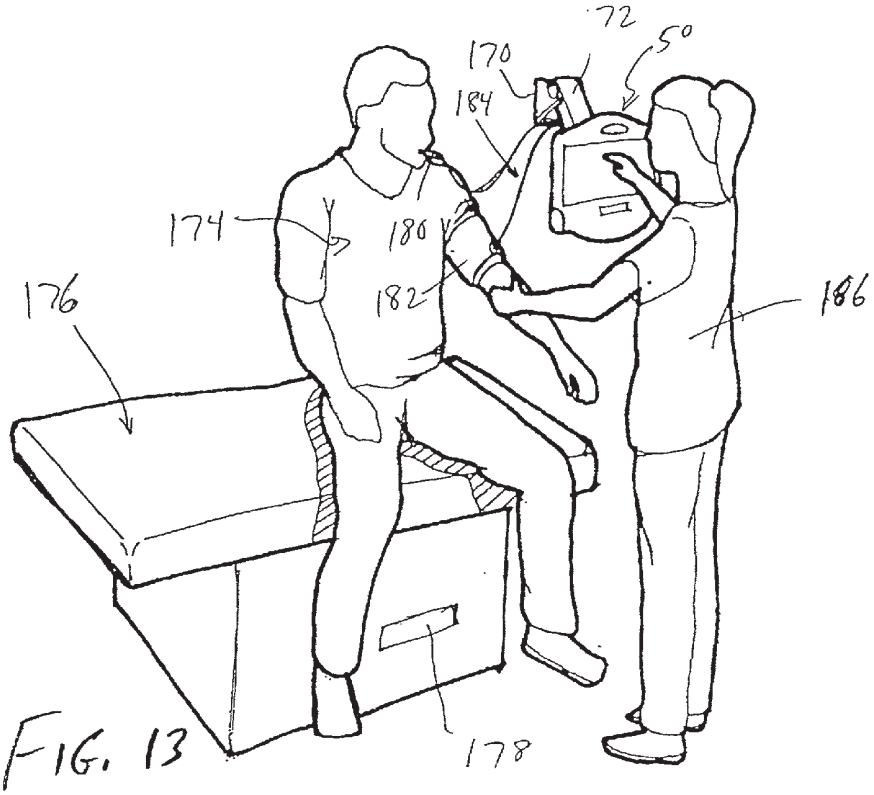
72
50
170
184
174
180
182
176
186
178

FIG. 13

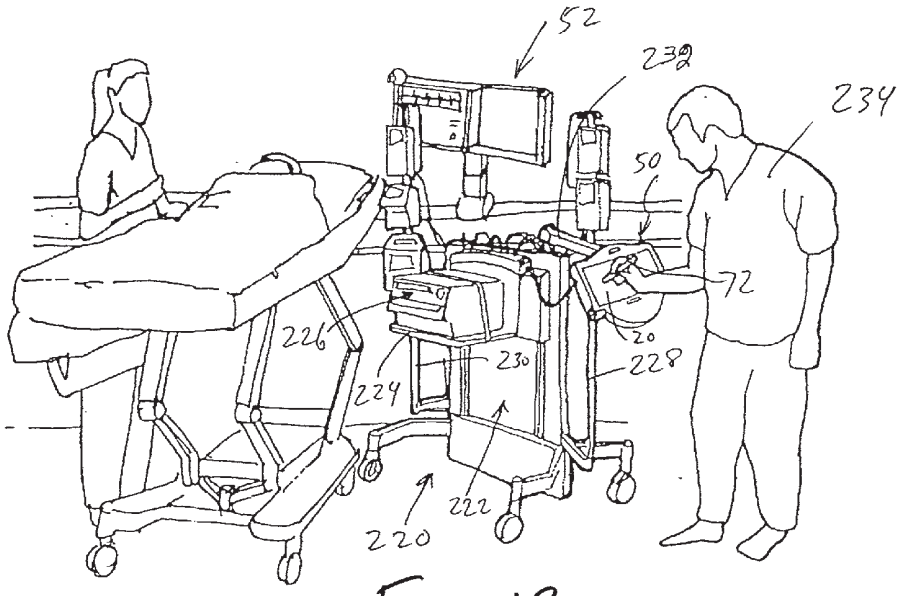
52
232
234
50
72
20
226
224
230
228
222
220

FIG. 18

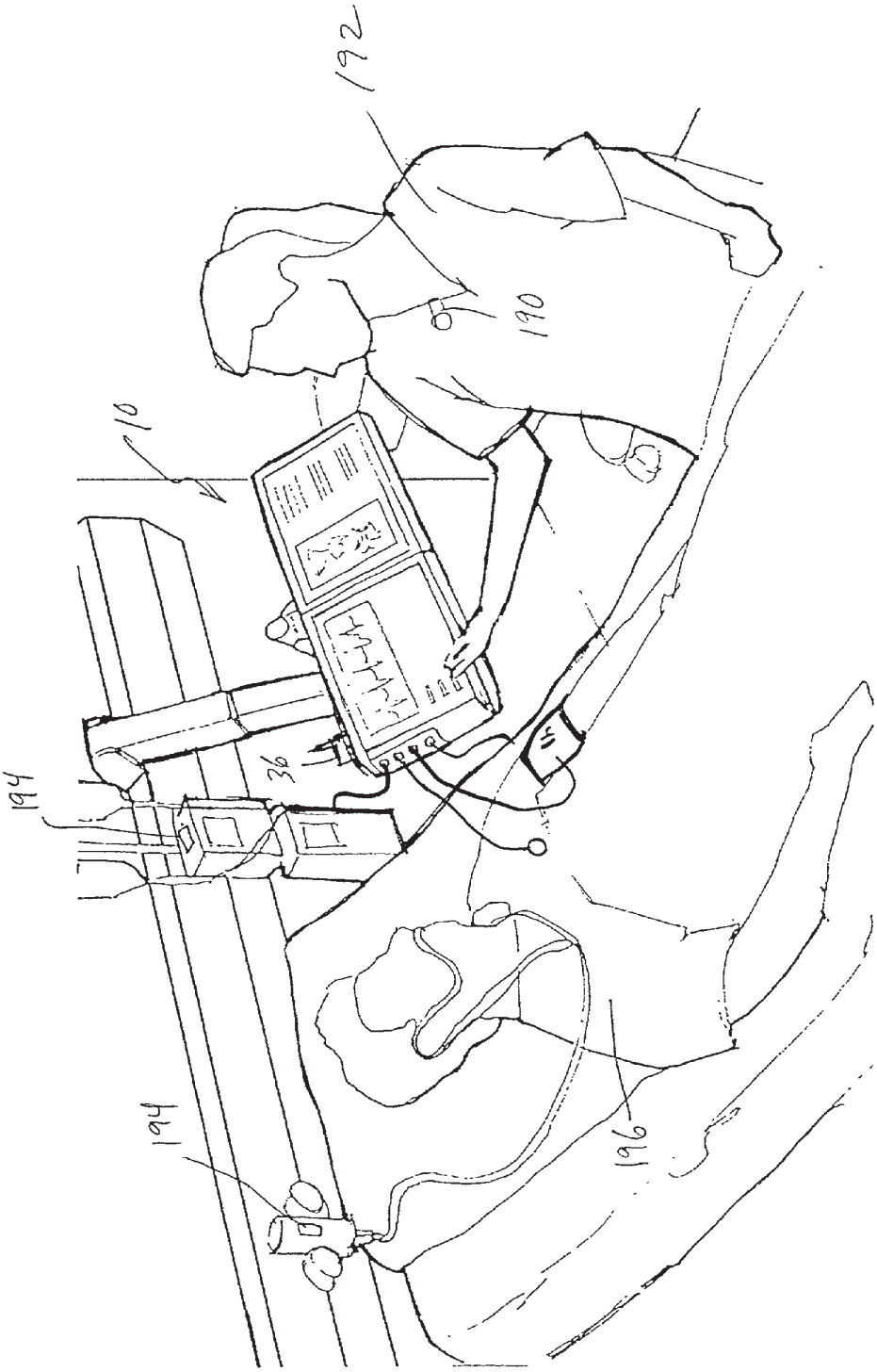

FIG. 14

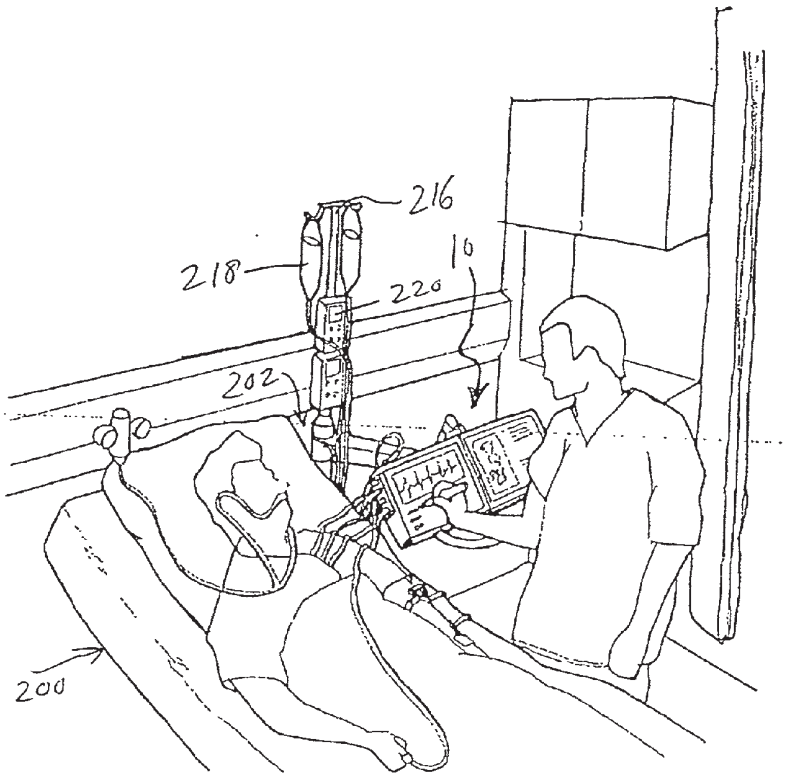

FIG. 15

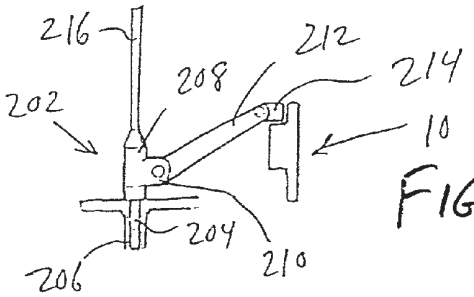

FIG. 16

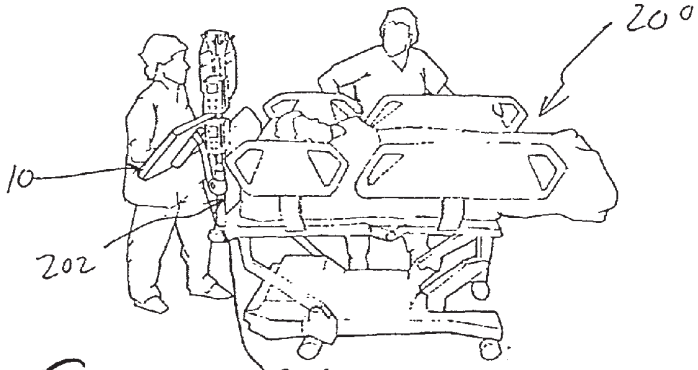

FIG. 17

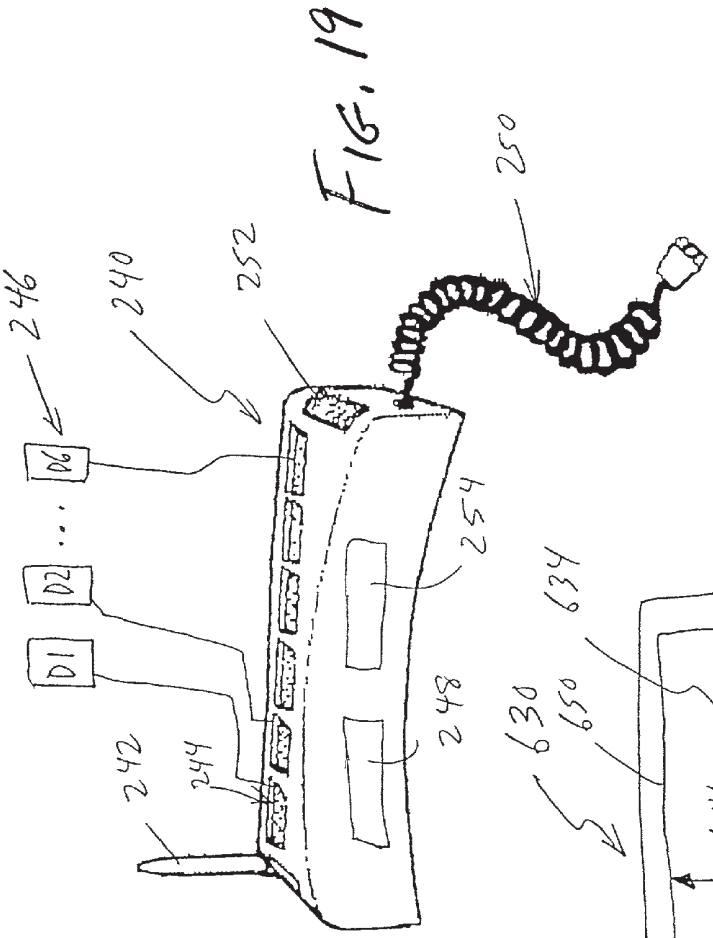
246
240
252
250
D6
D2
D1
242
244
248
254

FIG. 19

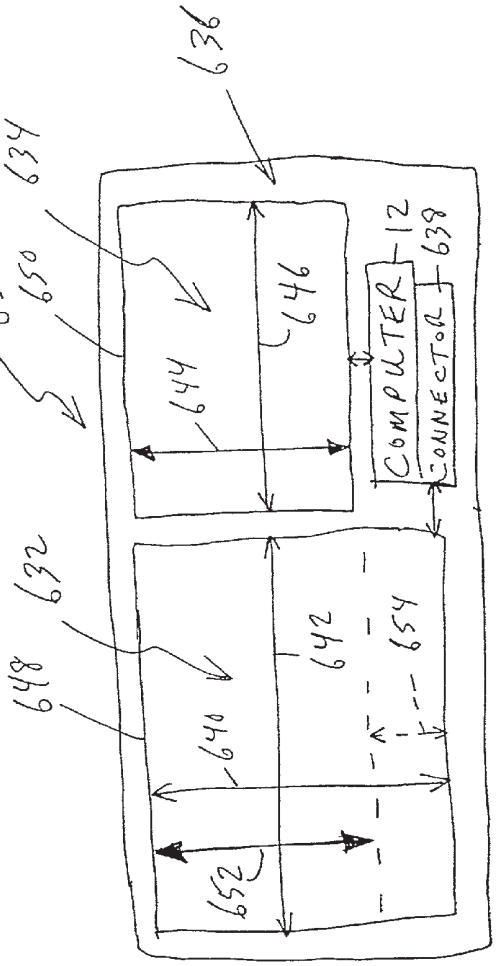
636
634
630
650
644
646
COMPUTER
CONNECTOR
12
638
632
648
640
642
654
652

FIG. 41

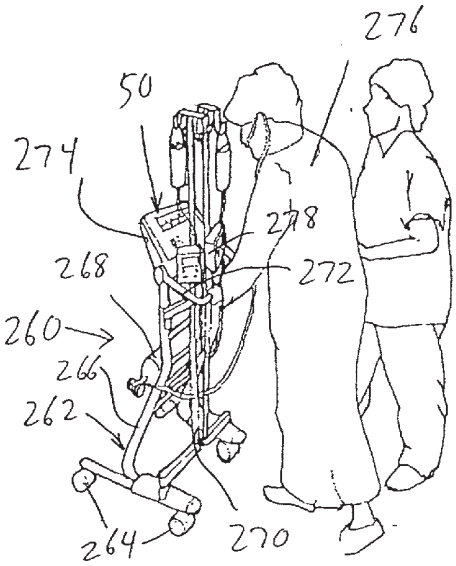

FIG. 20

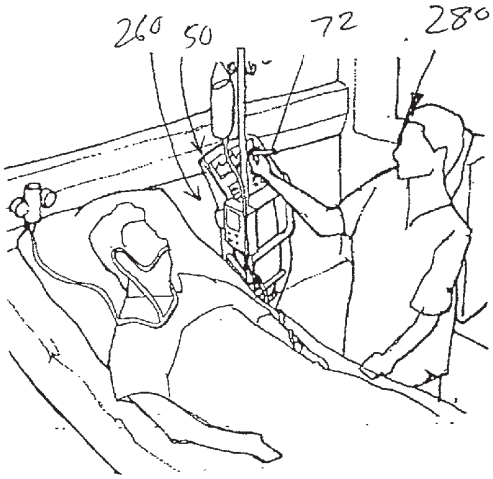

FIG. 21

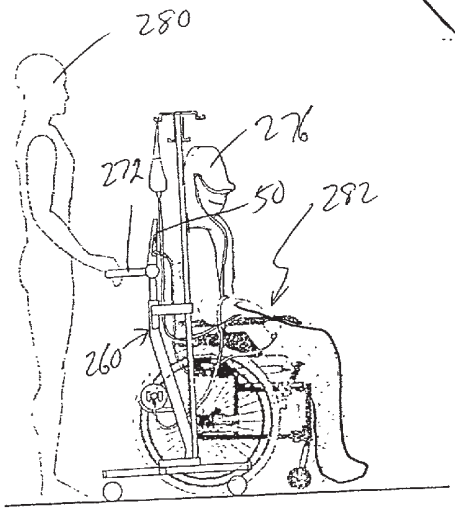

FIG. 22

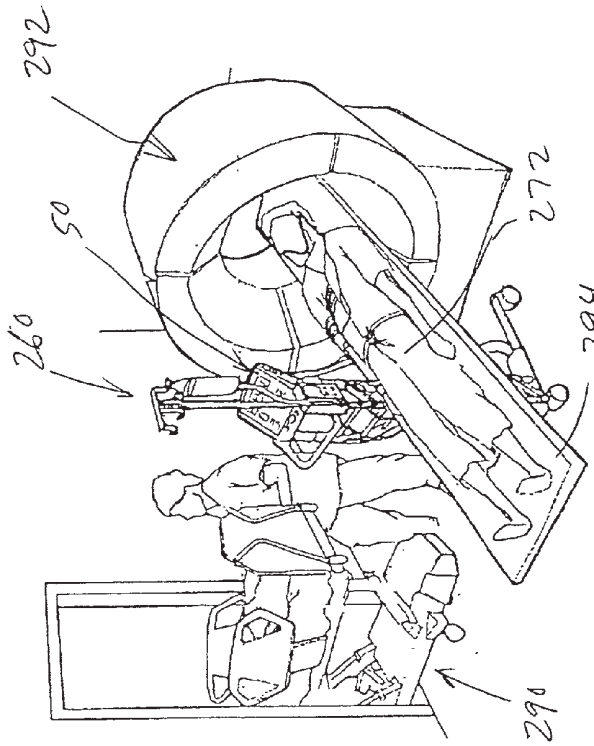

FIG. 24

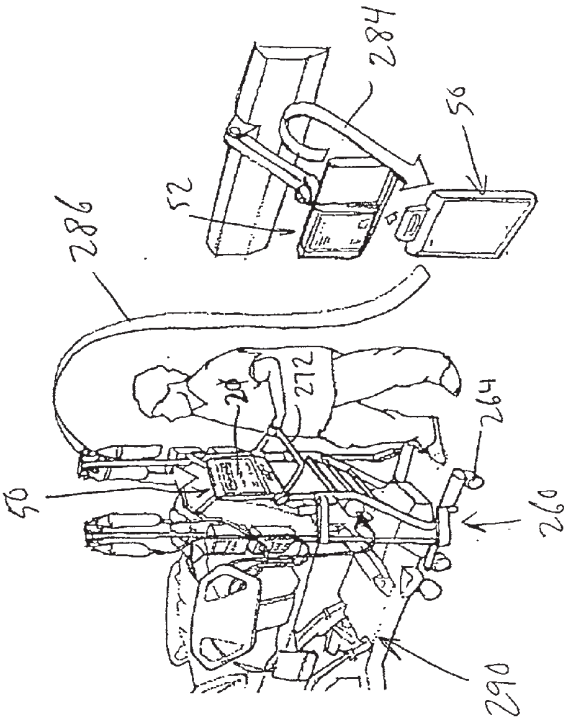

FIG. 23

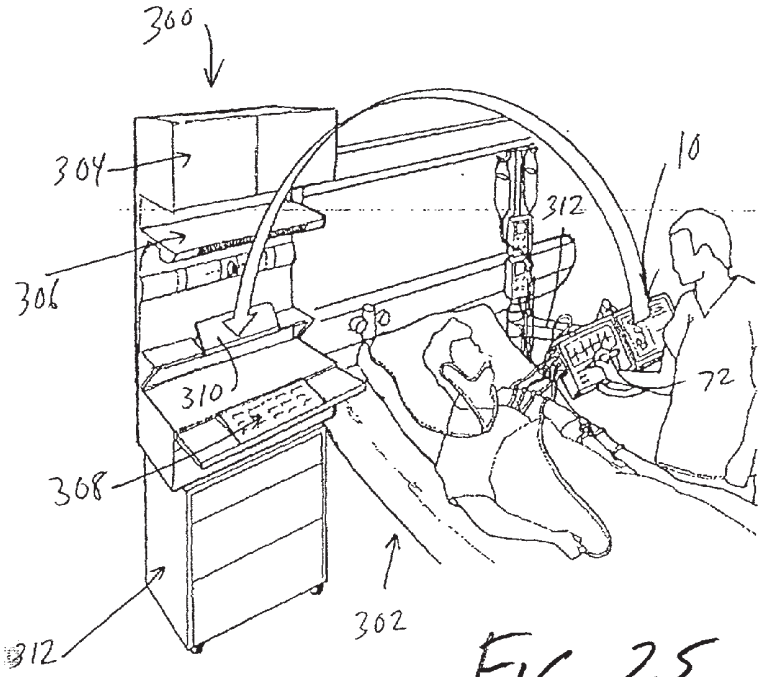

FIG. 25

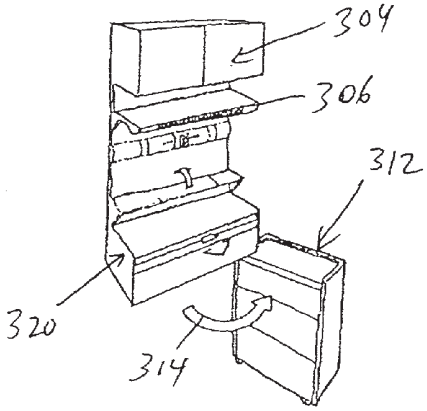

FIG. 26

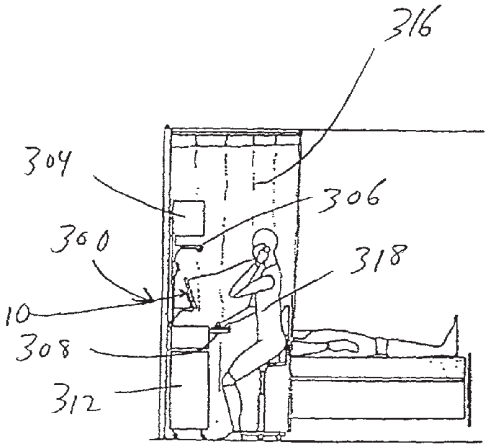

FIG. 27

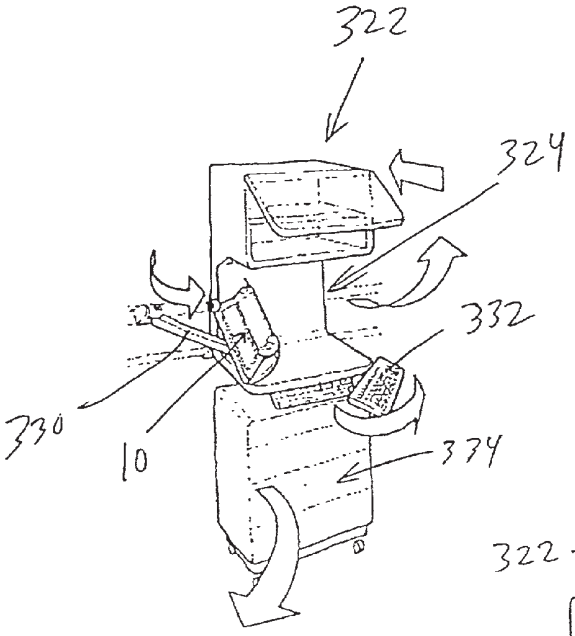

FIG. 29

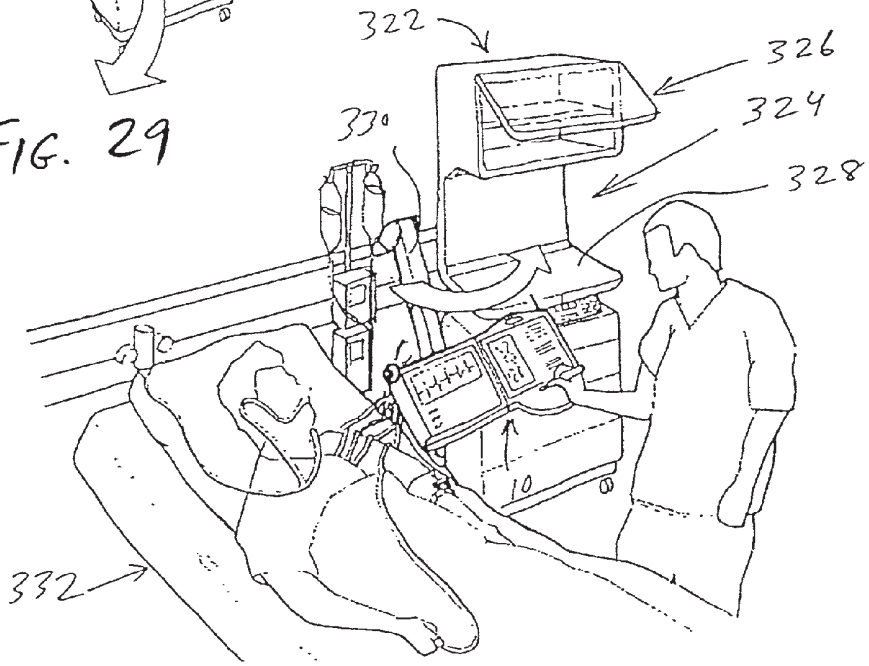

FIG. 28

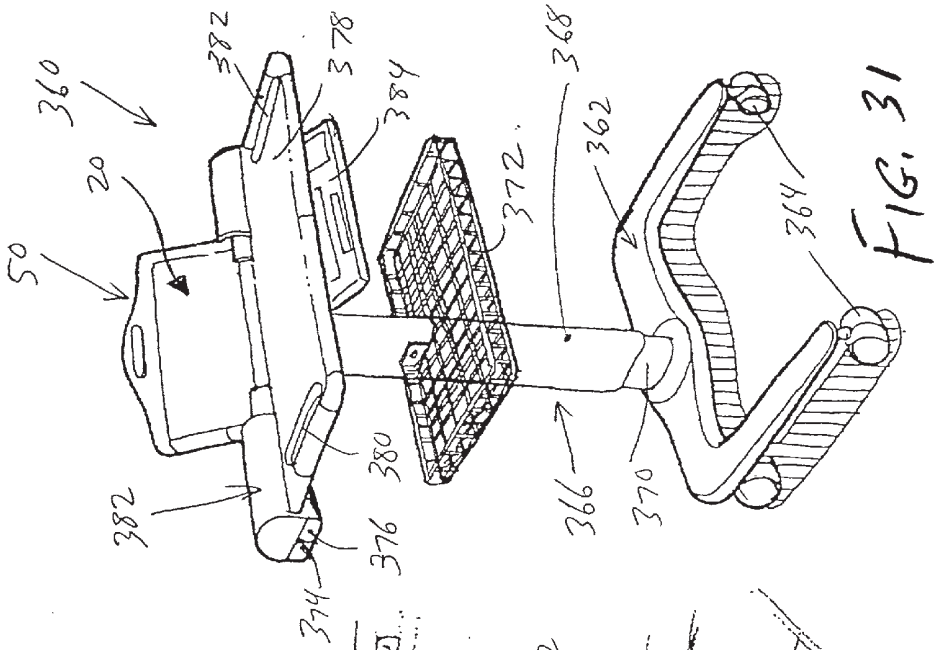
360
382
378
384
368
362
20
50
372
364
380
382
376
374
366
370

FIG. 31

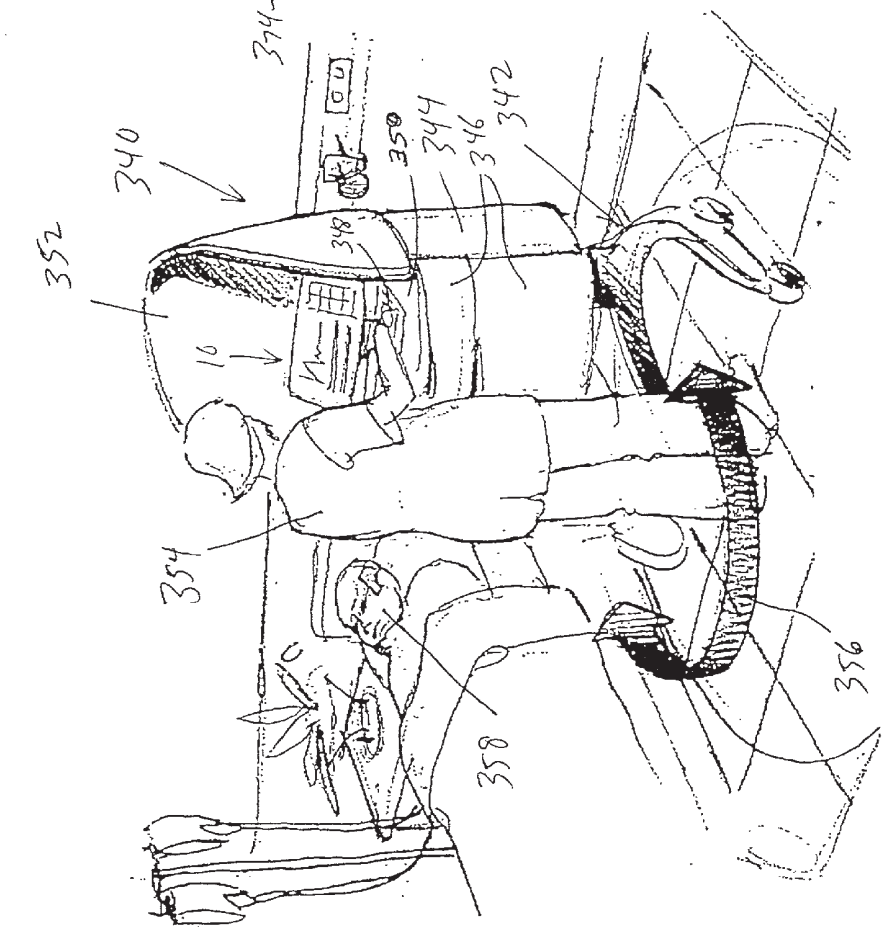
340
352
348
350
344
346
342
10
354
358
356

FIG. 30

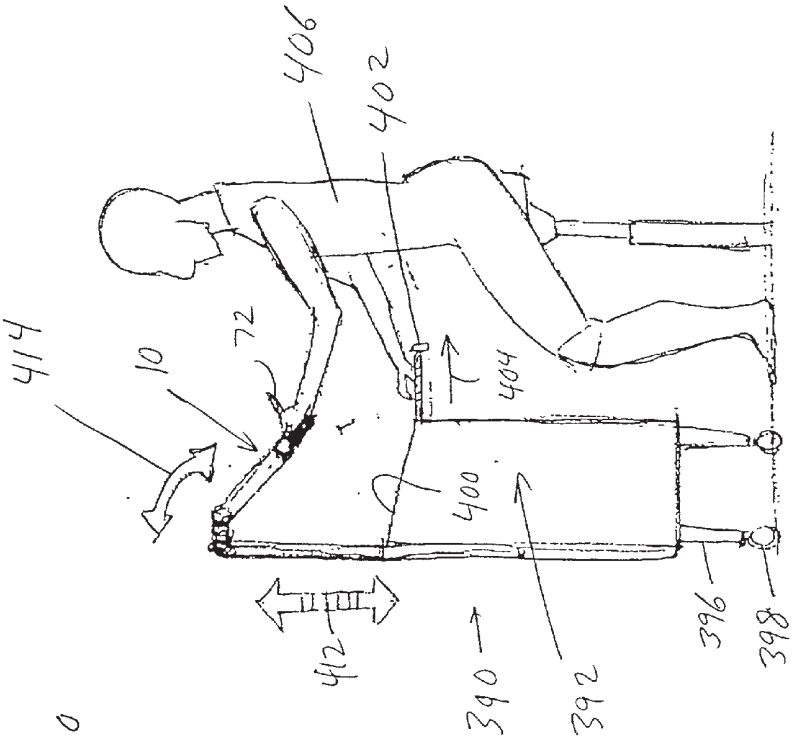
406
402
414
10
72
404
400
412
390
392
396
398

FIG. 33

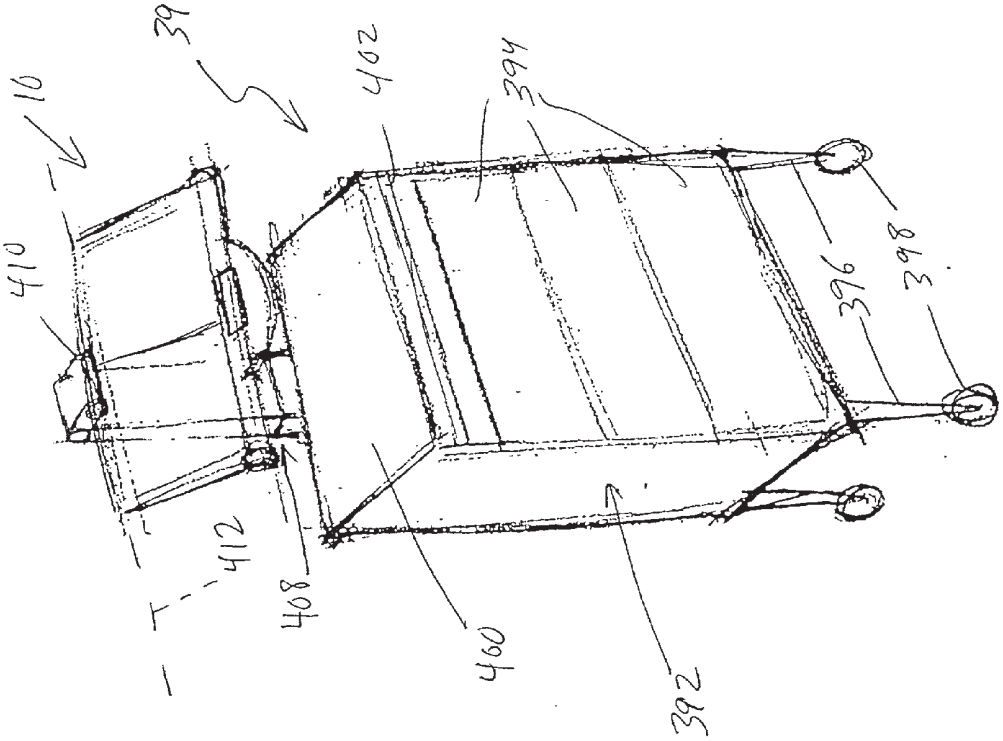
10
390
402
394
410
412
408
400
392
396
398

FIG. 32

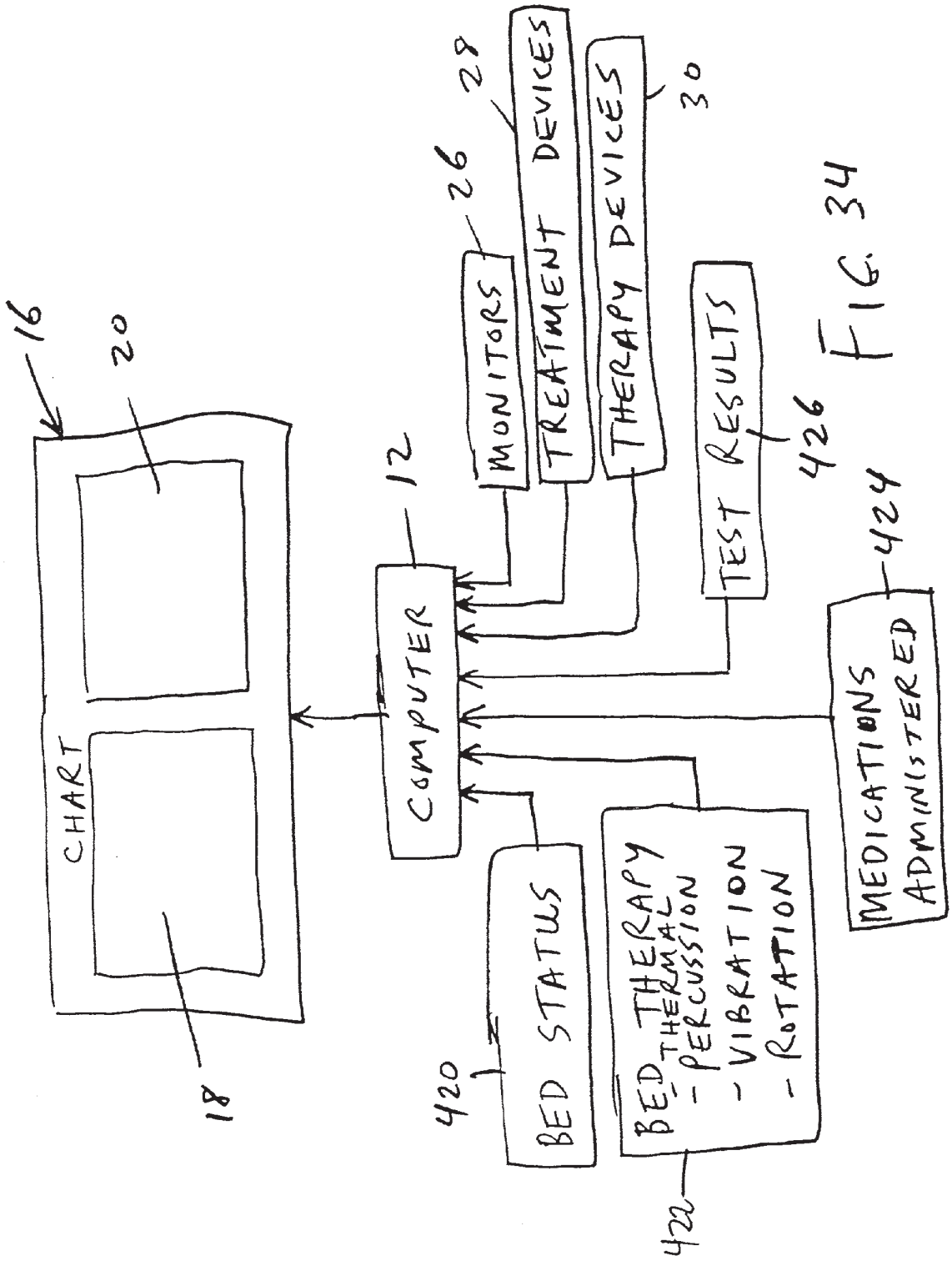
16
20
CHART
18
12
COMPUTER
MONITORS
26
TREATMENT DEVICES
28
THERAPY DEVICES
30
TEST RESULTS
426
MEDICATIONS ADMINISTERED
424
BED STATUS
420
BED THERAPY
- THERMAL
- PERCUSSION
- VIBRATION
- ROTATION
422

FIG. 34

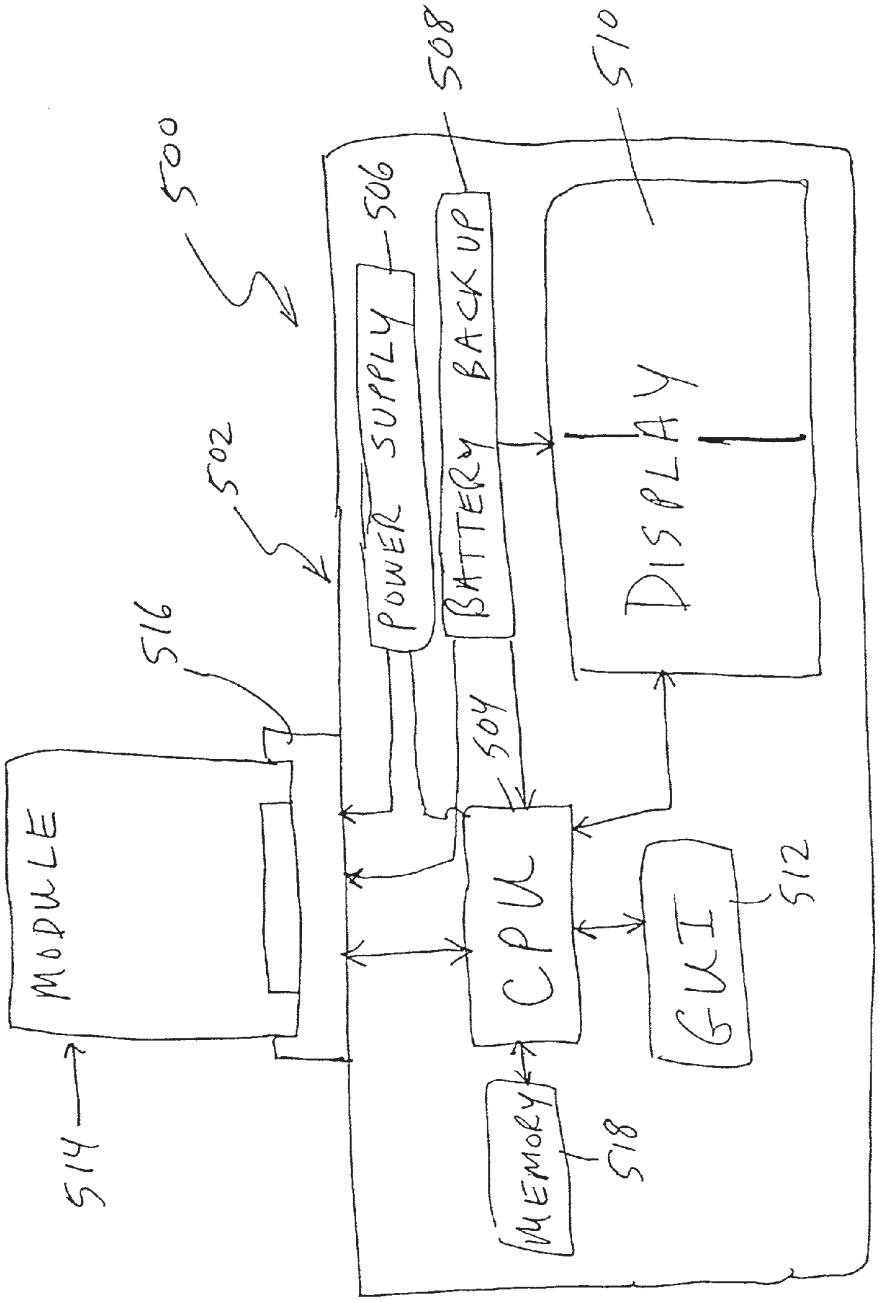
500
502
504
506
508
510
512
514
516
518
POWER SUPPLY
BATTERY BACKUP
DISPLAY
MODULE
CPU
GUI
MEMORY

FIG. 35

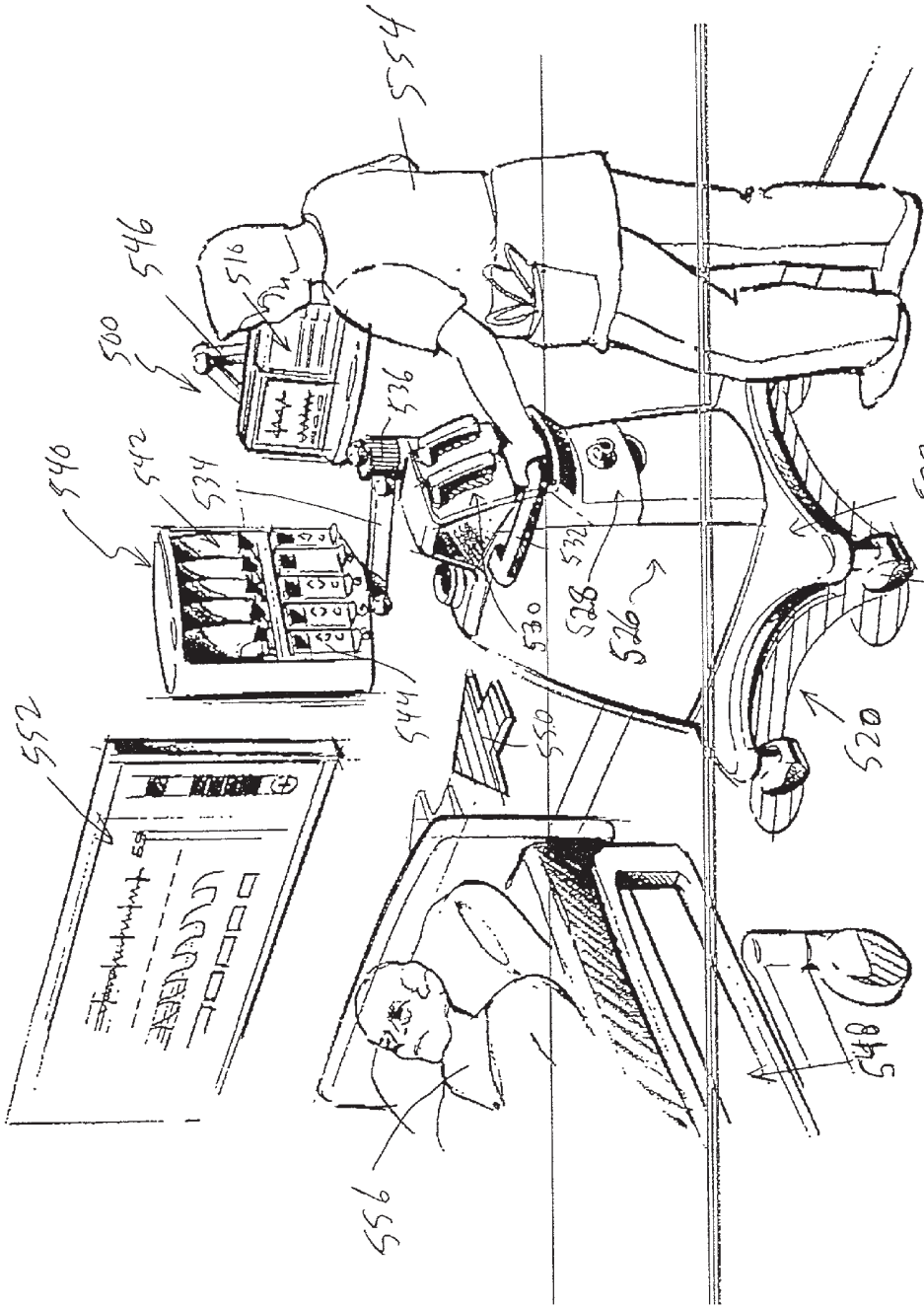
554
546
516
500
536
540
542
534
522
524
532
528
526
530
544
550
520
552
548
556

FIG. 36

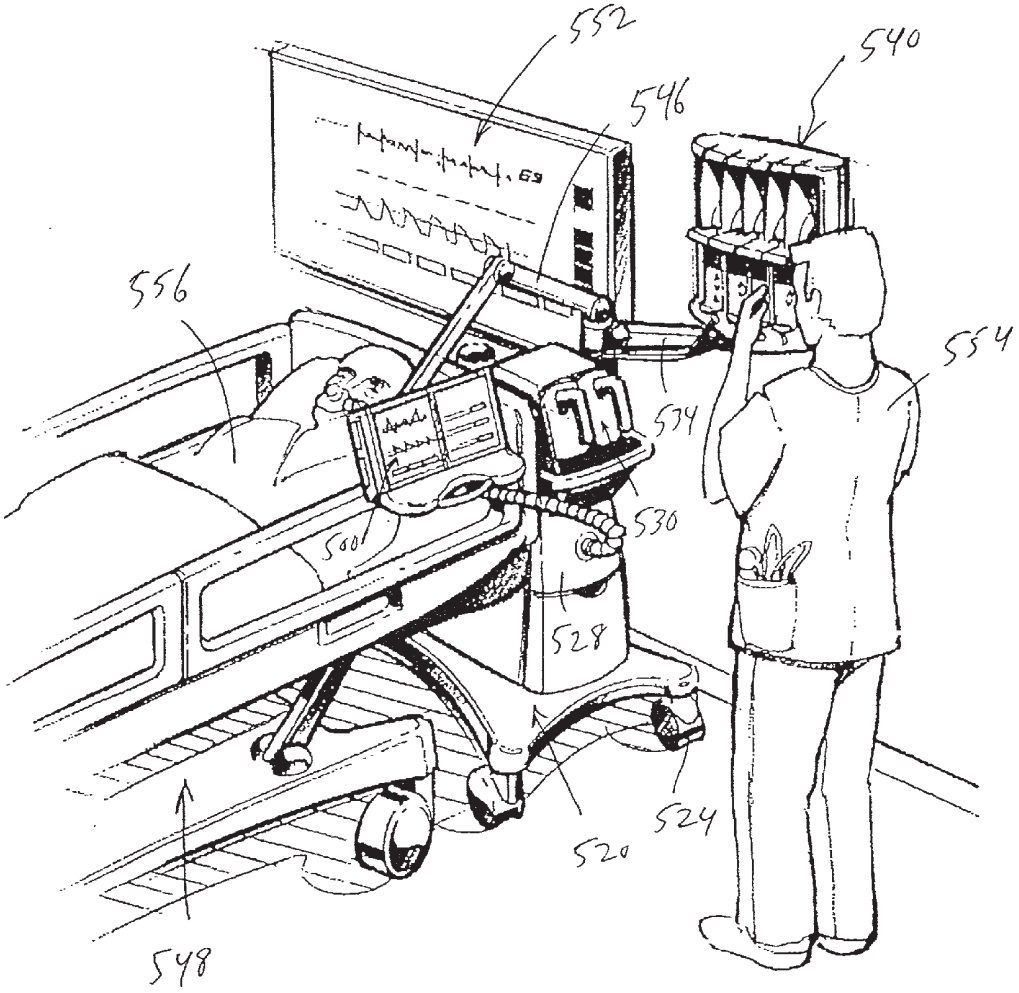

FIG. 37

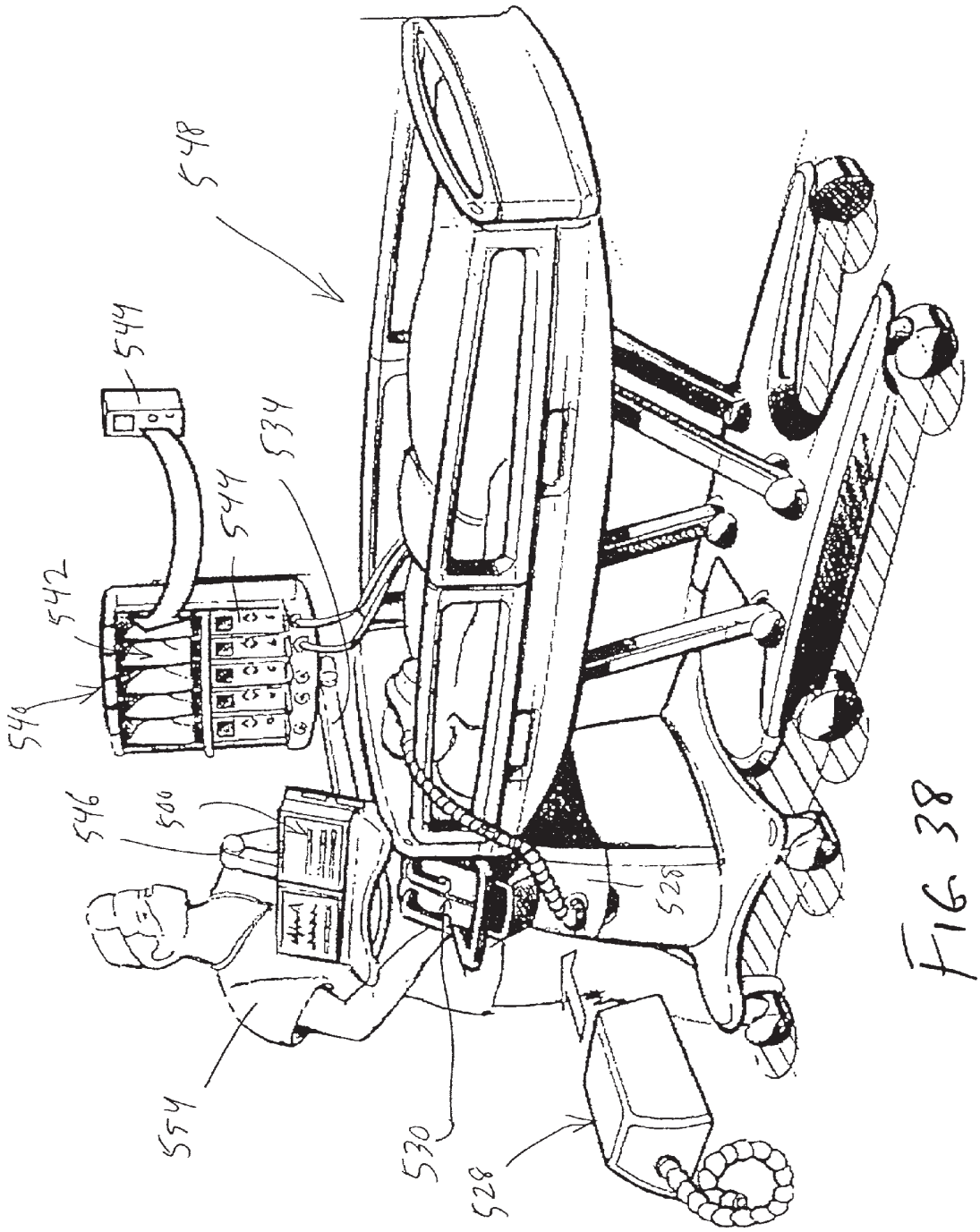

FIG 38

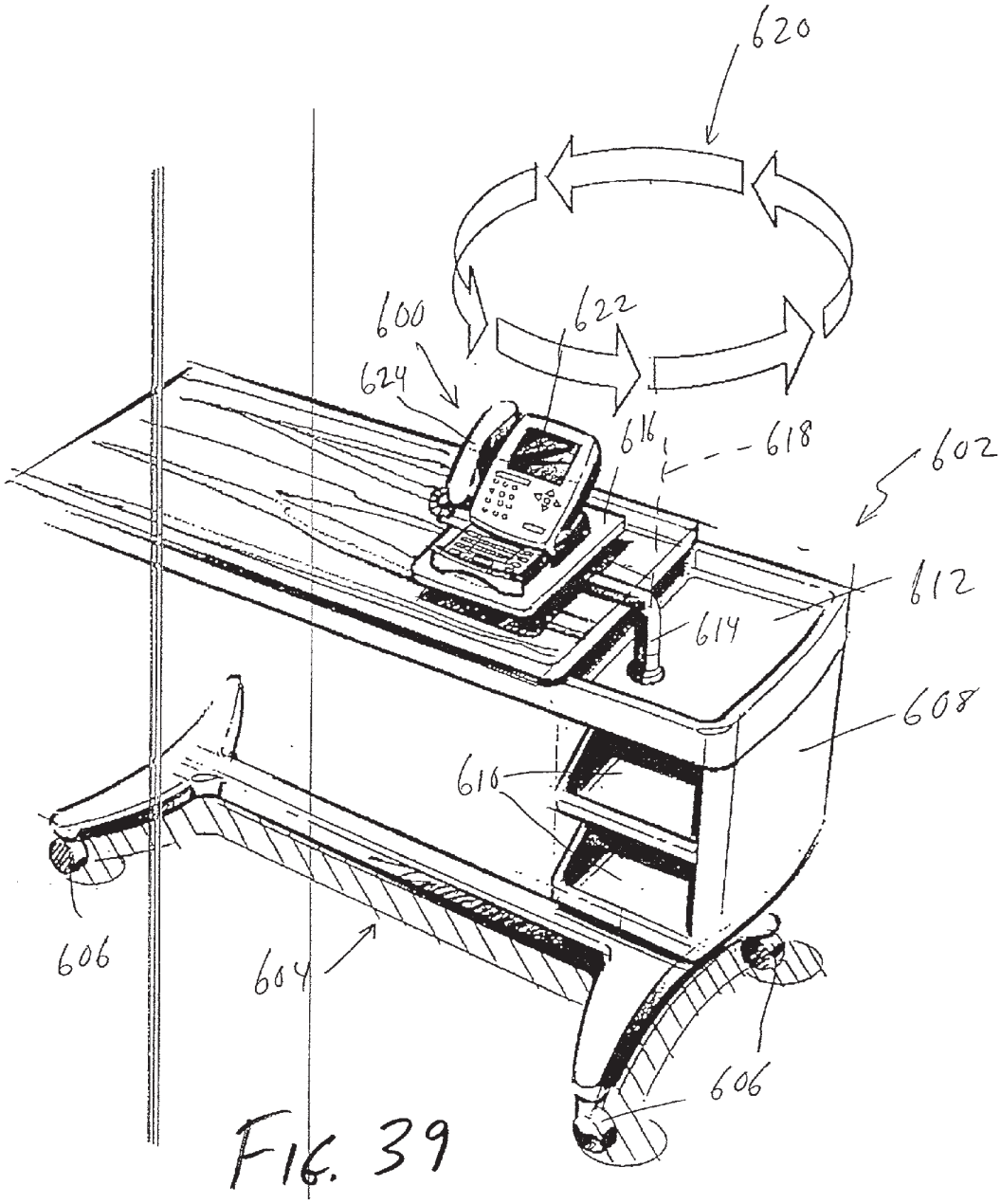

FIG. 39

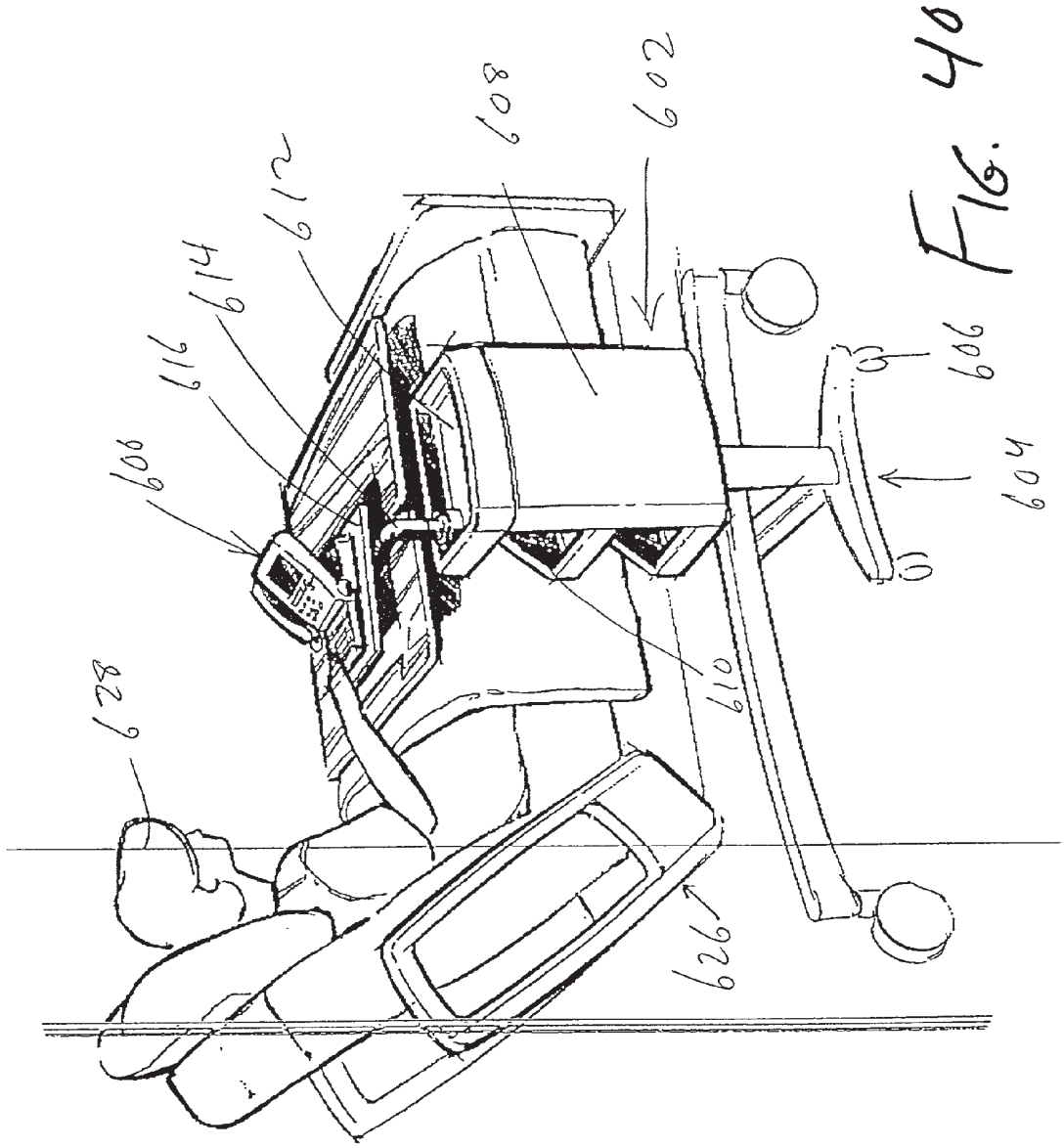

FIG. 40

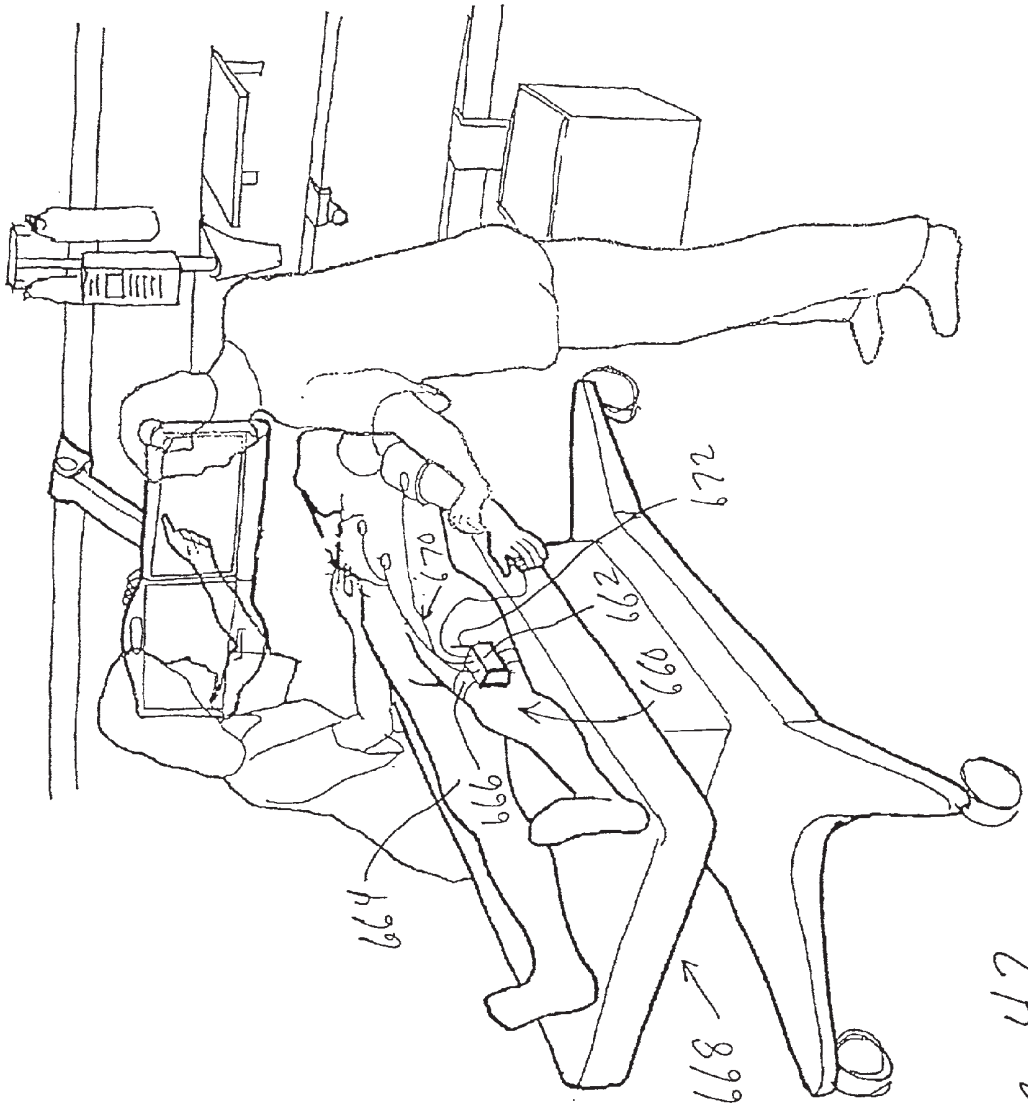

FIG. 42

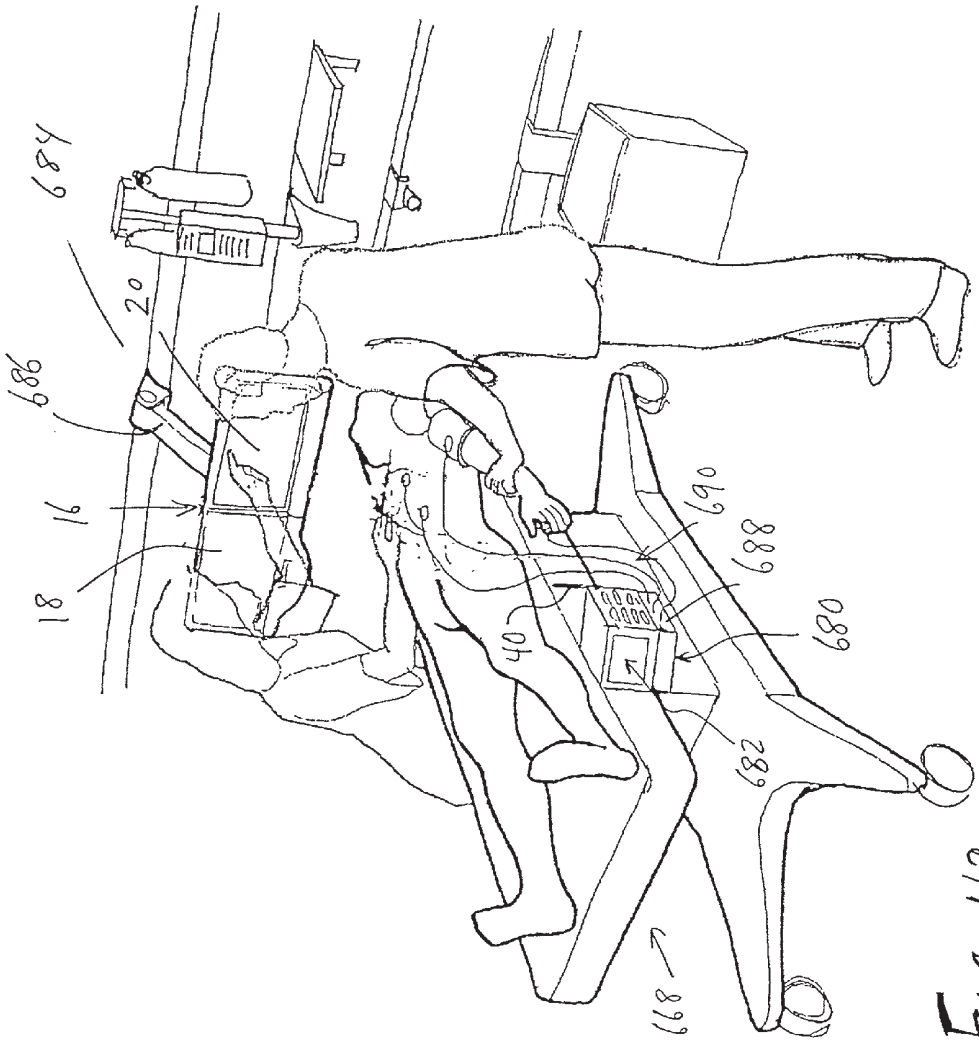

FIG. 43

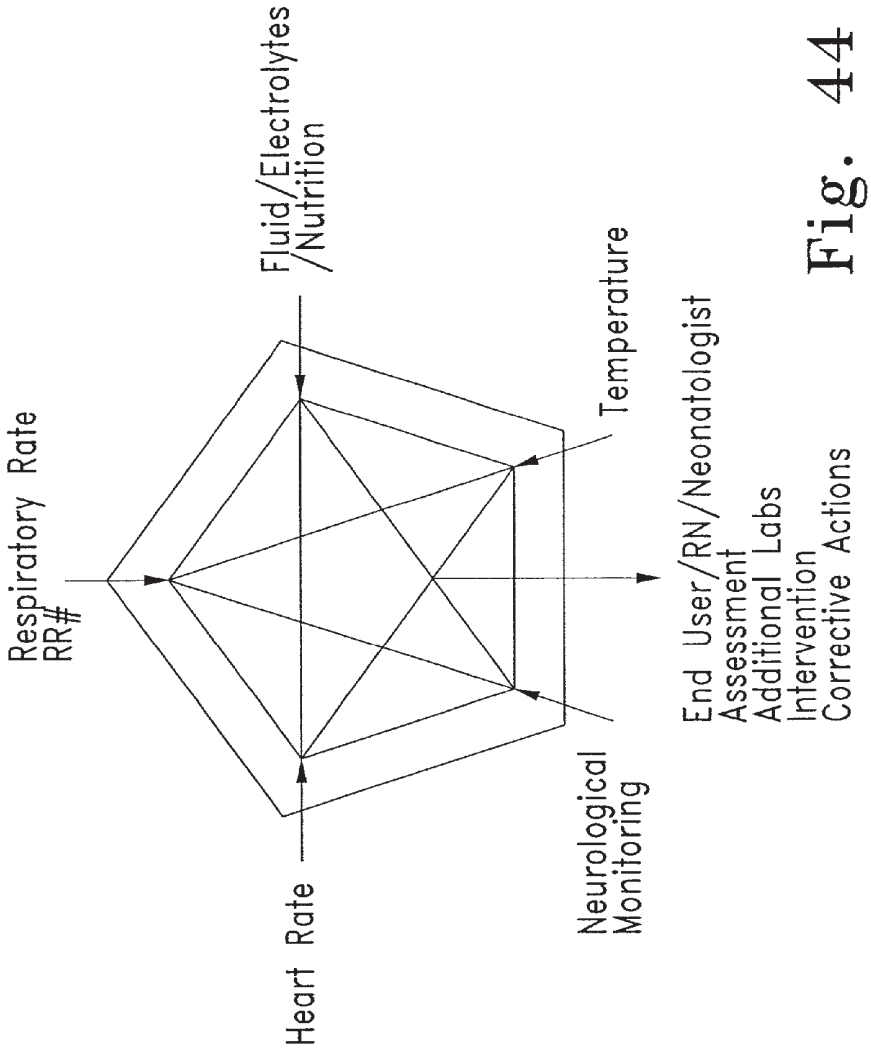
Respiratory Rate
RR#
Heart Rate
Fluid/Electrolytes
/Nutrition
Neurological
Monitoring
Temperature
End User/RN/Neonatologist
Assessment
Additional Labs
Intervention
Corrective Actions

Fig. 44

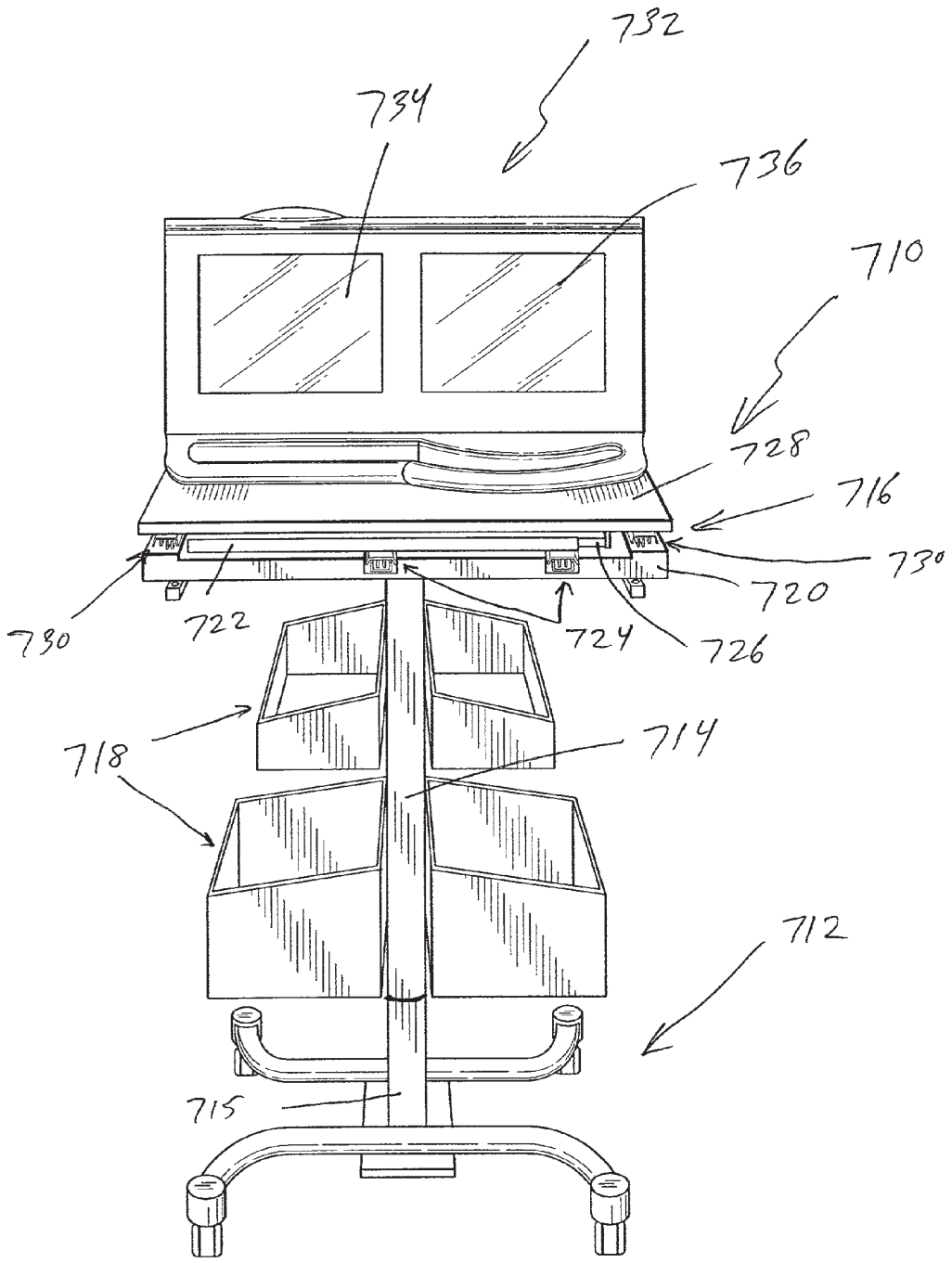

Fig. 45

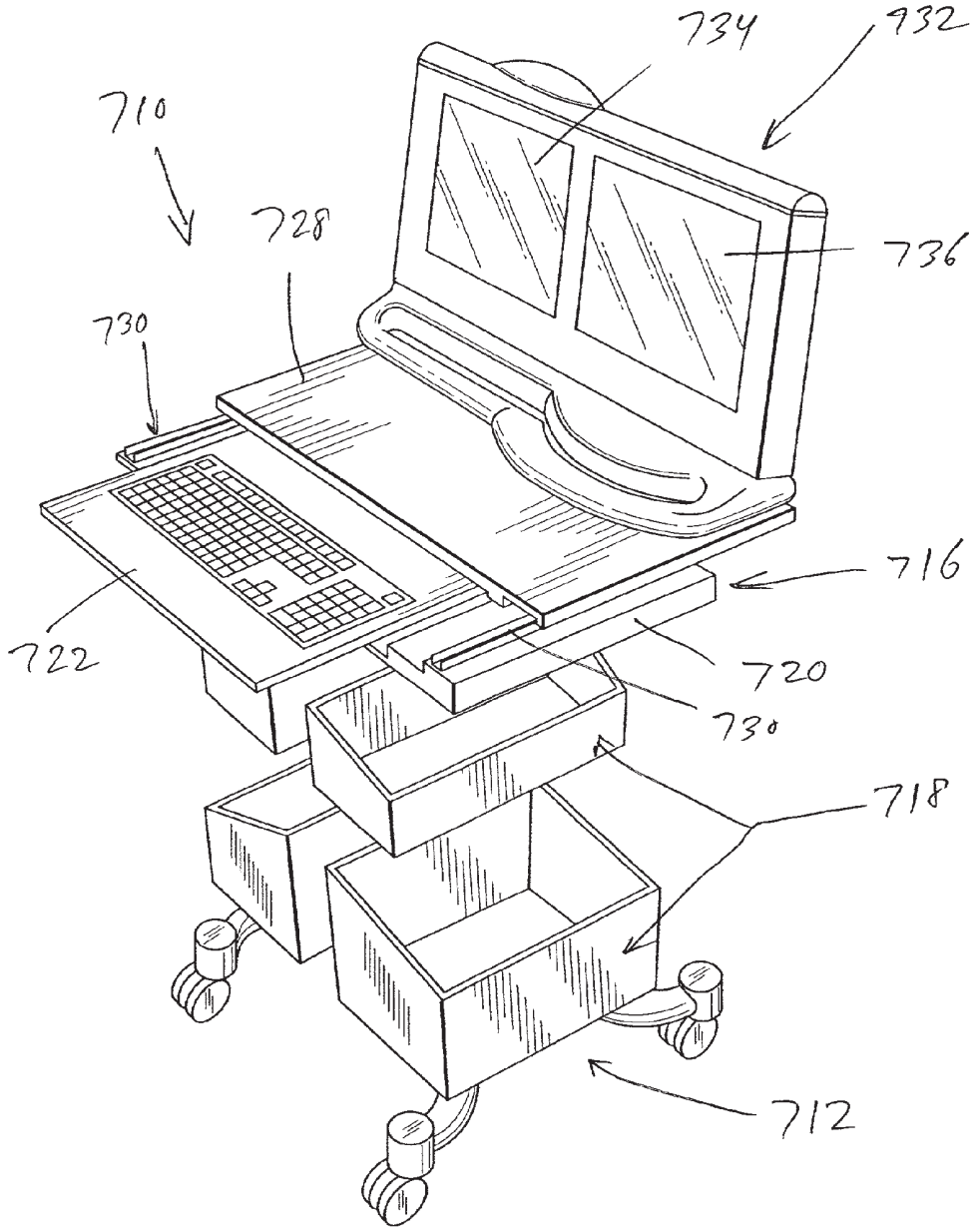

Fig. 46

JOHN SMITH 6/24/00 11:05

VITALS TRENDS P.INFO SET-UP HISTORY EQUIP. CPR

TIME	10:00	11:00	12:00	1:00	2:00
CORE TEMP	39.2	39.2	39.2	39.2	39.2
HEART RATE	107	108	107	107	107
HEART RHYTHM	S TACH	S TACH	S TACH	S TACH	S TACH
ART SYSTOLIC	150	160	150	150	150
ART DIASTOLIC	90	94	90	90	90
ART MEAN	110	116	110	110	110
PA SYSTOLIC	43	54	43	43	43
PA DIASTOLIC	22	25	22	22	22
PA MEAN	30	30	30	30	30
PCMP	20	10	20	20	20
CVP	10	10	10	10	10
CO	4.70	4.70	4.70	4.70	4.70
CI	2.17	2.17	2.17	2.17	2.17
SVR	10.89	10.89	10.89	10.89	10.89
PVR	159	159	159	159	159
SVO2	61	64	61	61	61
RESPIRATORY RATE	15	11	15	15	15
SPO2	100	99	100	100	100

Fig. 47A

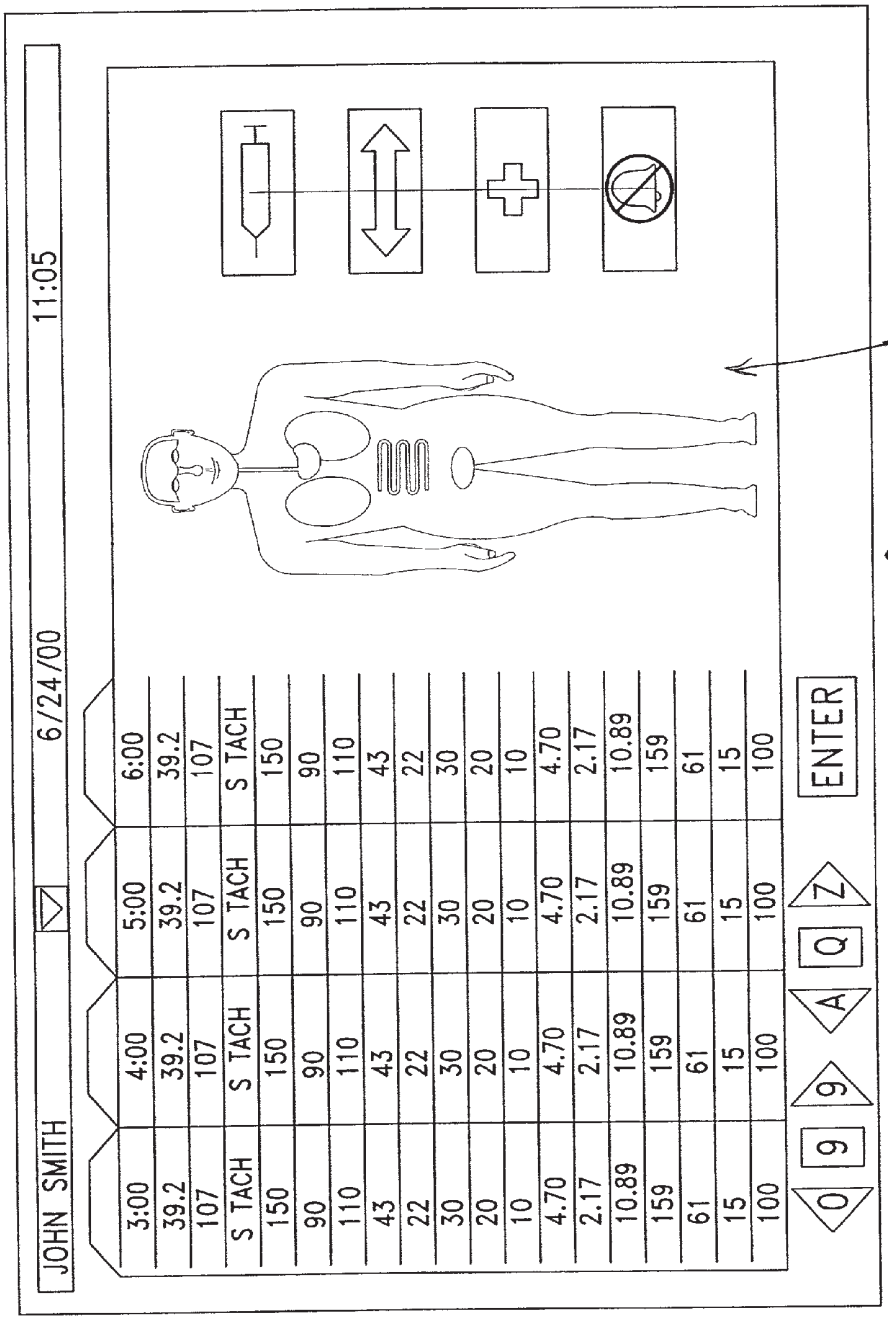
JOHN SMITH
6/24/00
11:05
3:00
4:00
5:00
6:00
39.2
107
S TACH
150
90
110
43
22
30
20
10
4.70
2.17
10.89
159
61
15
100
0
9
A
Q
Z
ENTER
739

Fig. 47B

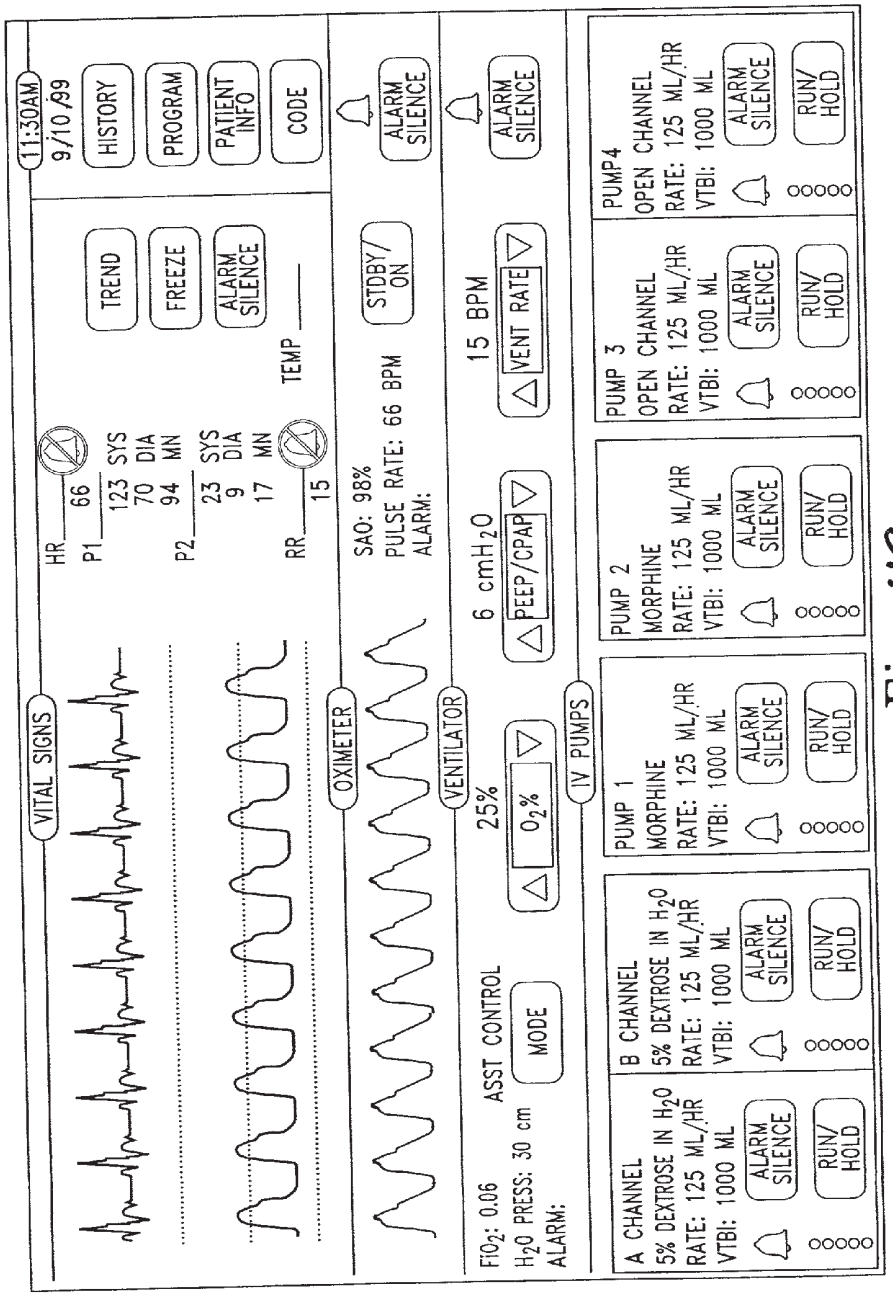
11:30AM
9/10/99
HISTORY
PROGRAM
PATIENT INFO
CODE
VITAL SIGNS
HR 66
P1 123 SYS
70 DIA
94 MN
P2 23 SYS
9 DIA
17 MN
RR 15
TREND
FREEZE
ALARM SILENCE
TEMP
OXIMETER
SAO: 98%
PULSE RATE: 66 BPM
ALARM:
STDBY/ON
ALARM SILENCE
VENTILATOR
FIO2: 0.06
H2O PRESS: 30 cm
ALARM:
ASST CONTROL
MODE
25%
O2%
6 cmH2O
PEEP/CPAP
15 BPM
VENT RATE
ALARM SILENCE
IV PUMPS
A CHANNEL
5% DEXTROSE IN H2O
RATE: 125 ML/HR
VTBI: 1000 ML
ALARM SILENCE
RUN/HOLD
B CHANNEL
5% DEXTROSE IN H2O
RATE: 125 ML/HR
VTBI: 1000 ML
ALARM SILENCE
RUN/HOLD
PUMP 1
MORPHINE
RATE: 125 ML/HR
VTBI: 1000 ML
ALARM SILENCE
RUN/HOLD
PUMP 2
MORPHINE
RATE: 125 ML/HR
VTBI: 1000 ML
ALARM SILENCE
RUN/HOLD
PUMP 3
OPEN CHANNEL
RATE: 125 ML/HR
VTBI: 1000 ML
ALARM SILENCE
RUN/HOLD
PUMP4
OPEN CHANNEL
RATE: 125 ML/HR
VTBI: 1000 ML
ALARM SILENCE
RUN/HOLD

Fig. 48

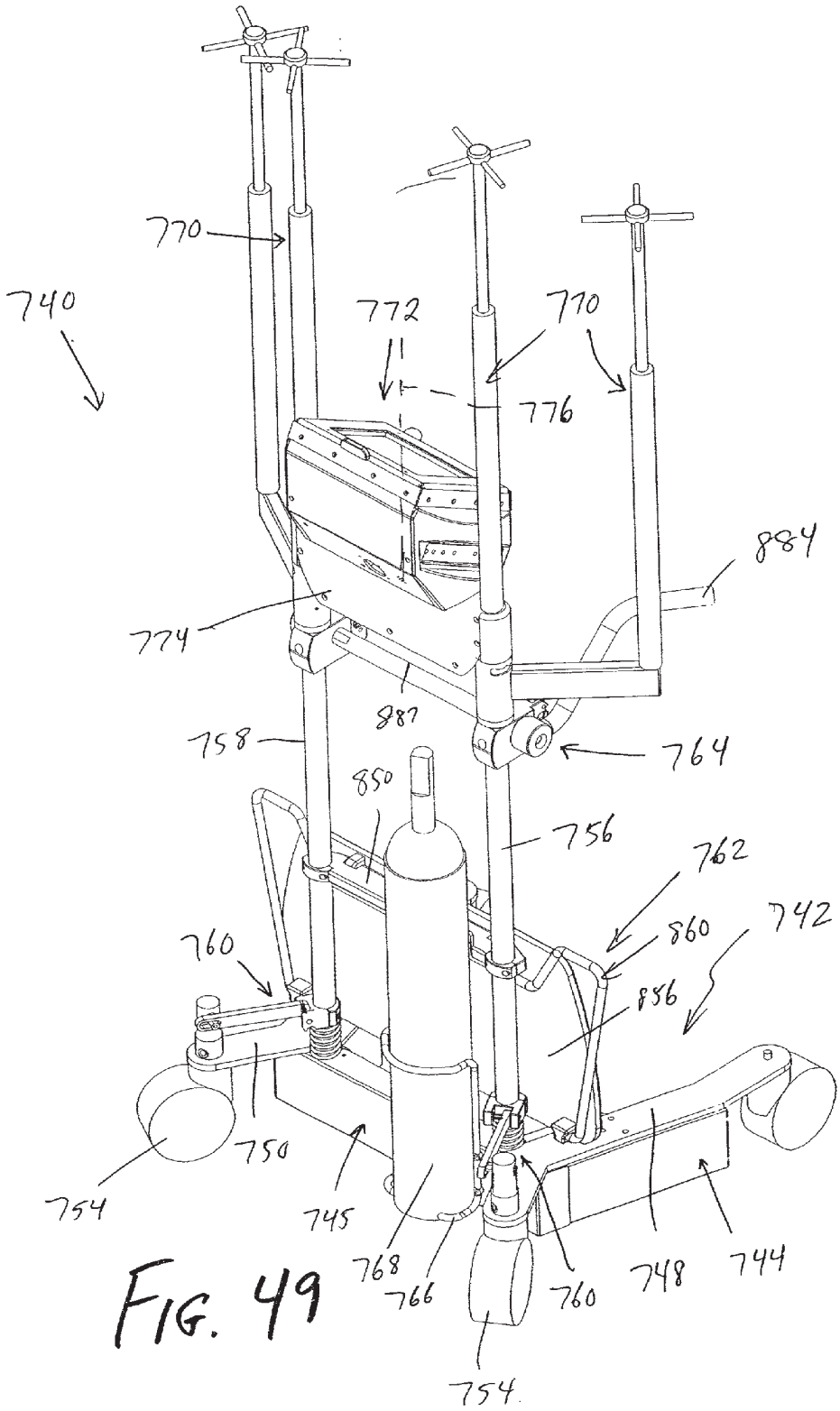
770
740
772
770
776
884
774
887
758
764
850
756
762
860
742
760
856
750
754
745
768
766
760
748
744
754

FIG. 49

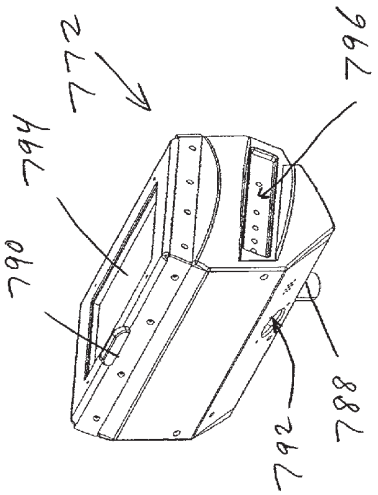

FIG. 51

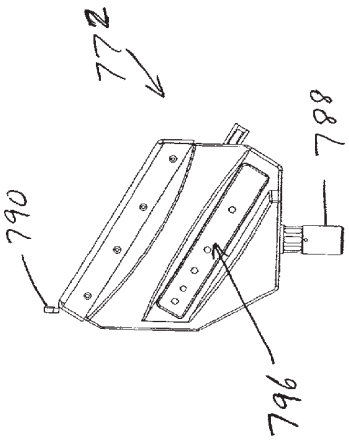

FIG. 52

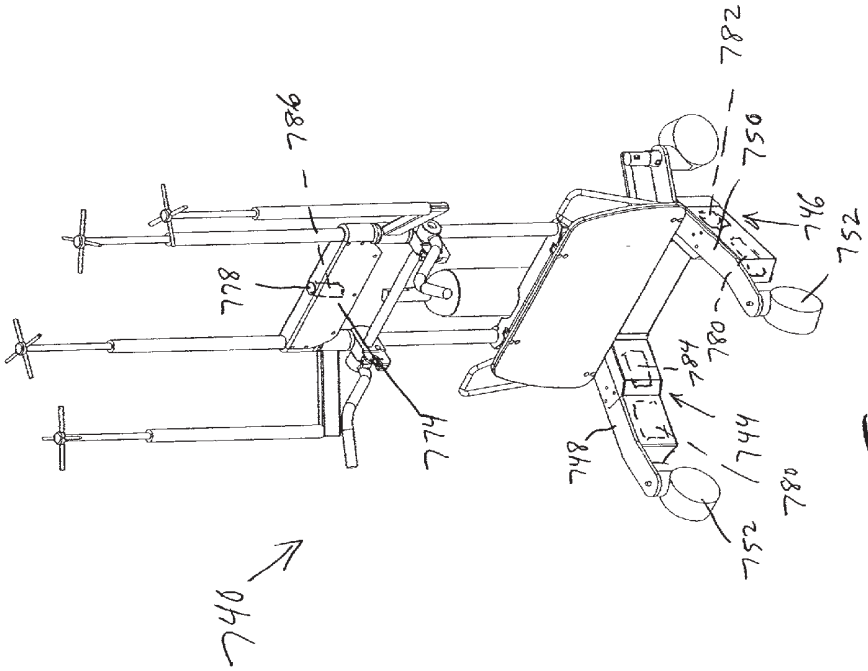

FIG. 50

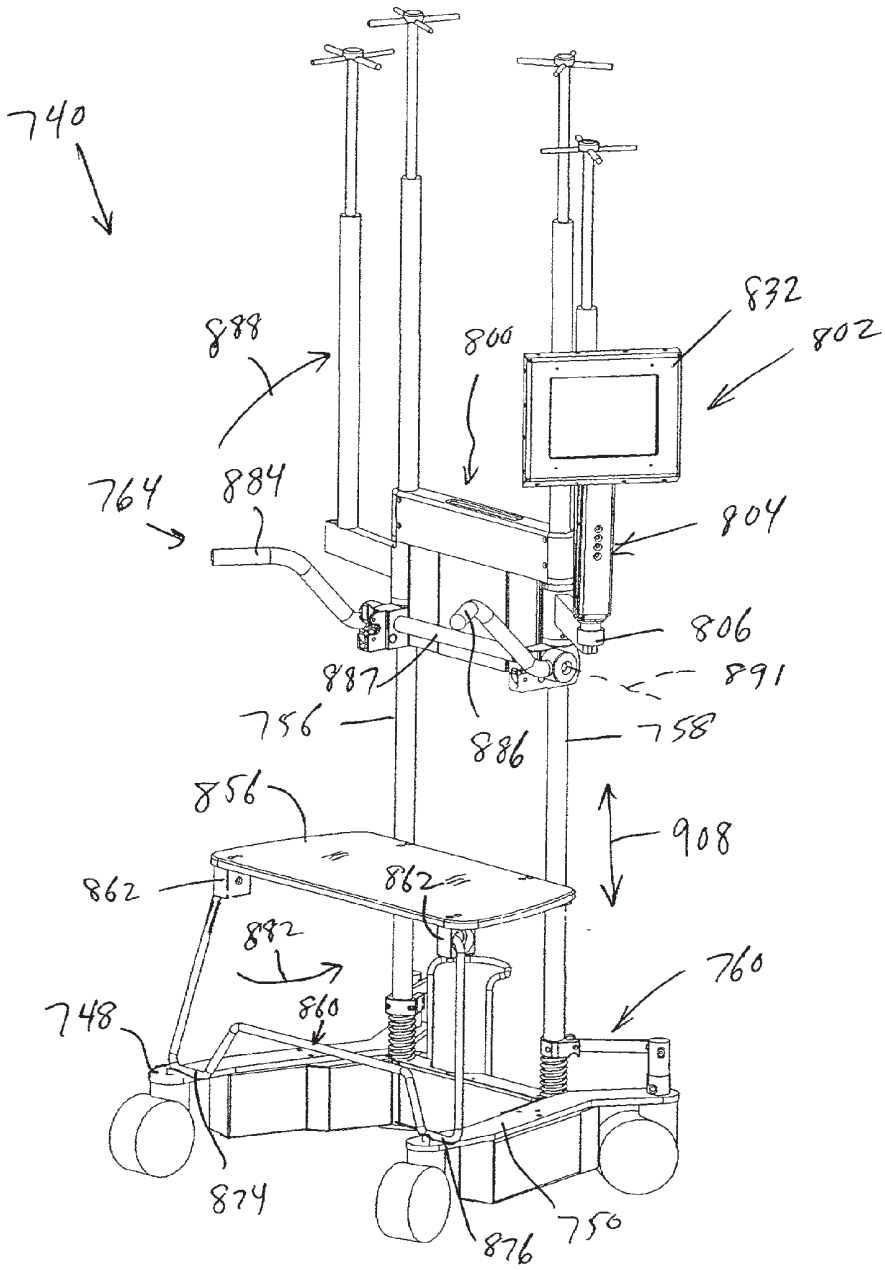
740
888
800
832
802
764
884
804
806
887
891
756
886
758
856
908
862
862
882
760
748
860
874
876
750

FIG. 53

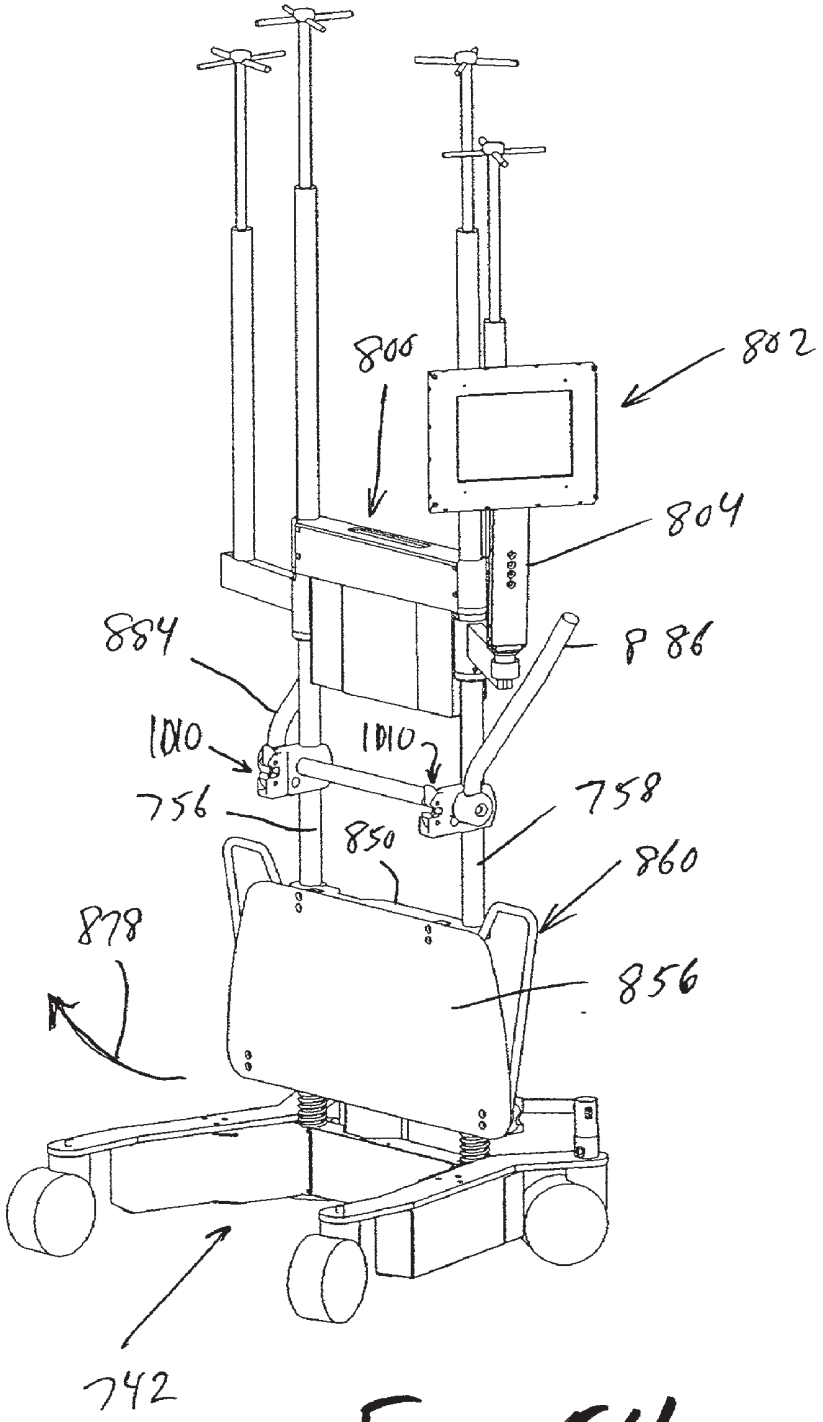

FIG. 54

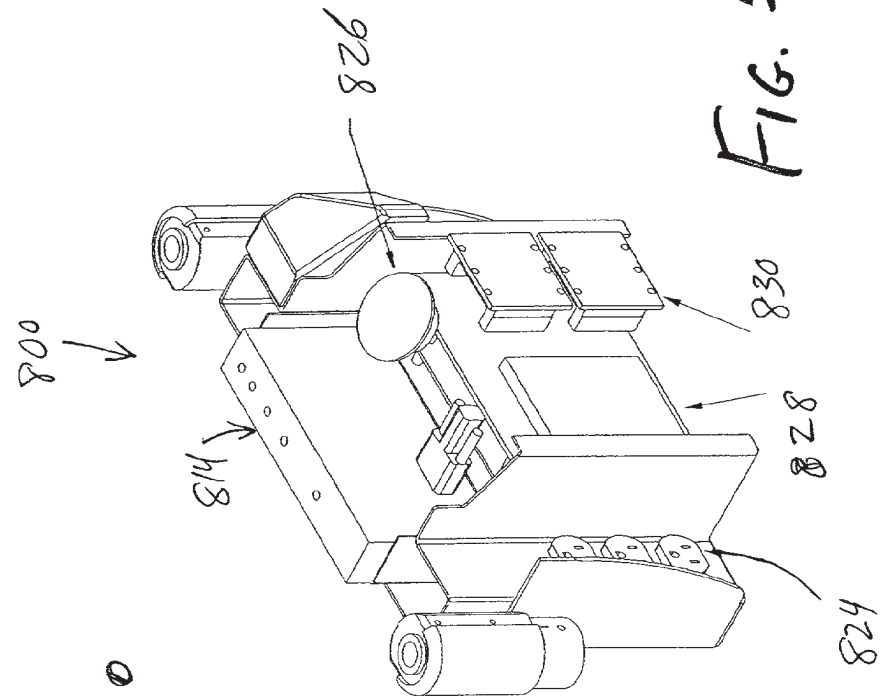

FIG. 56

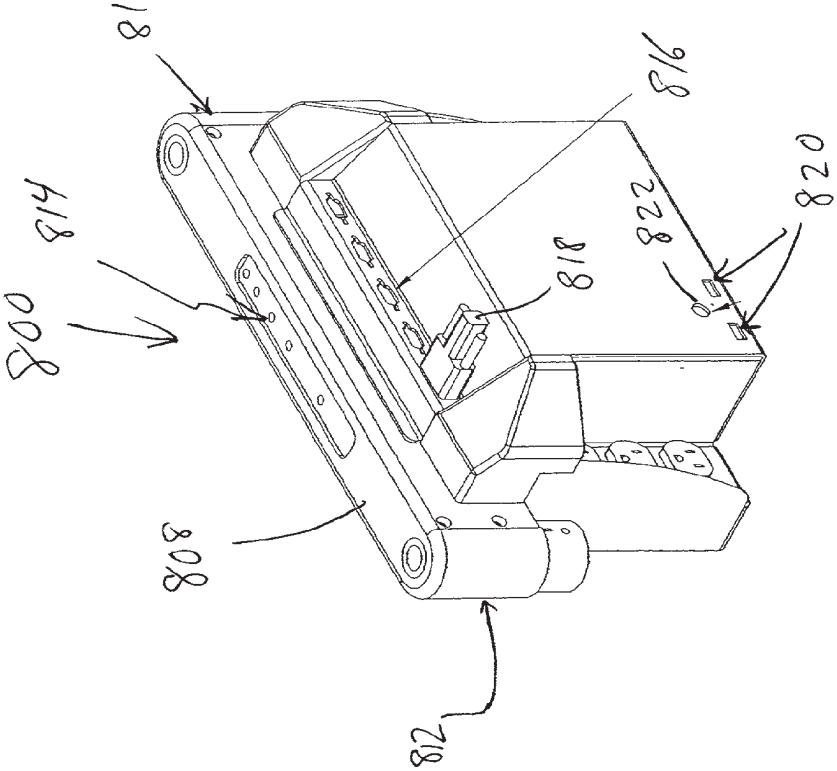

FIG. 57

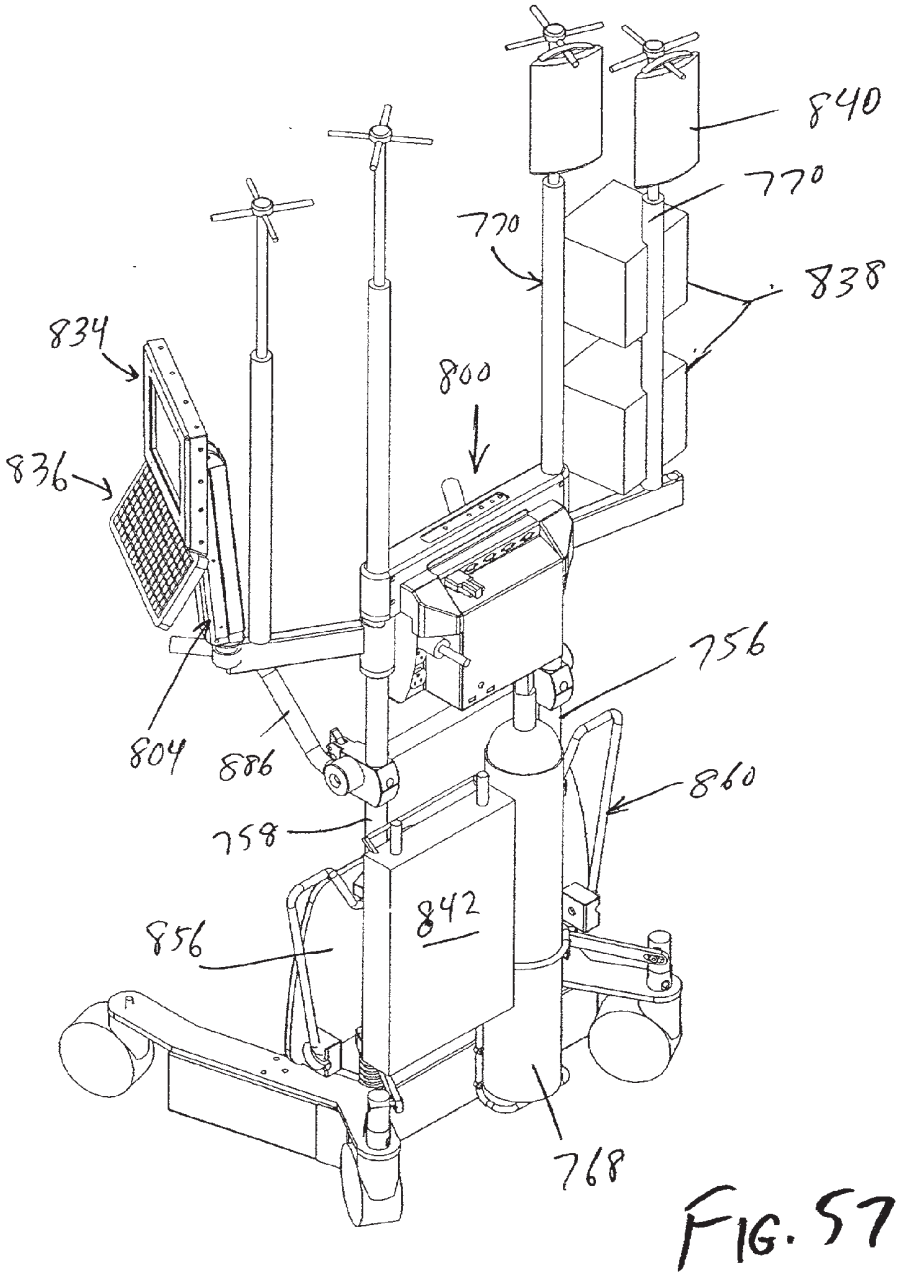

FIG. 57

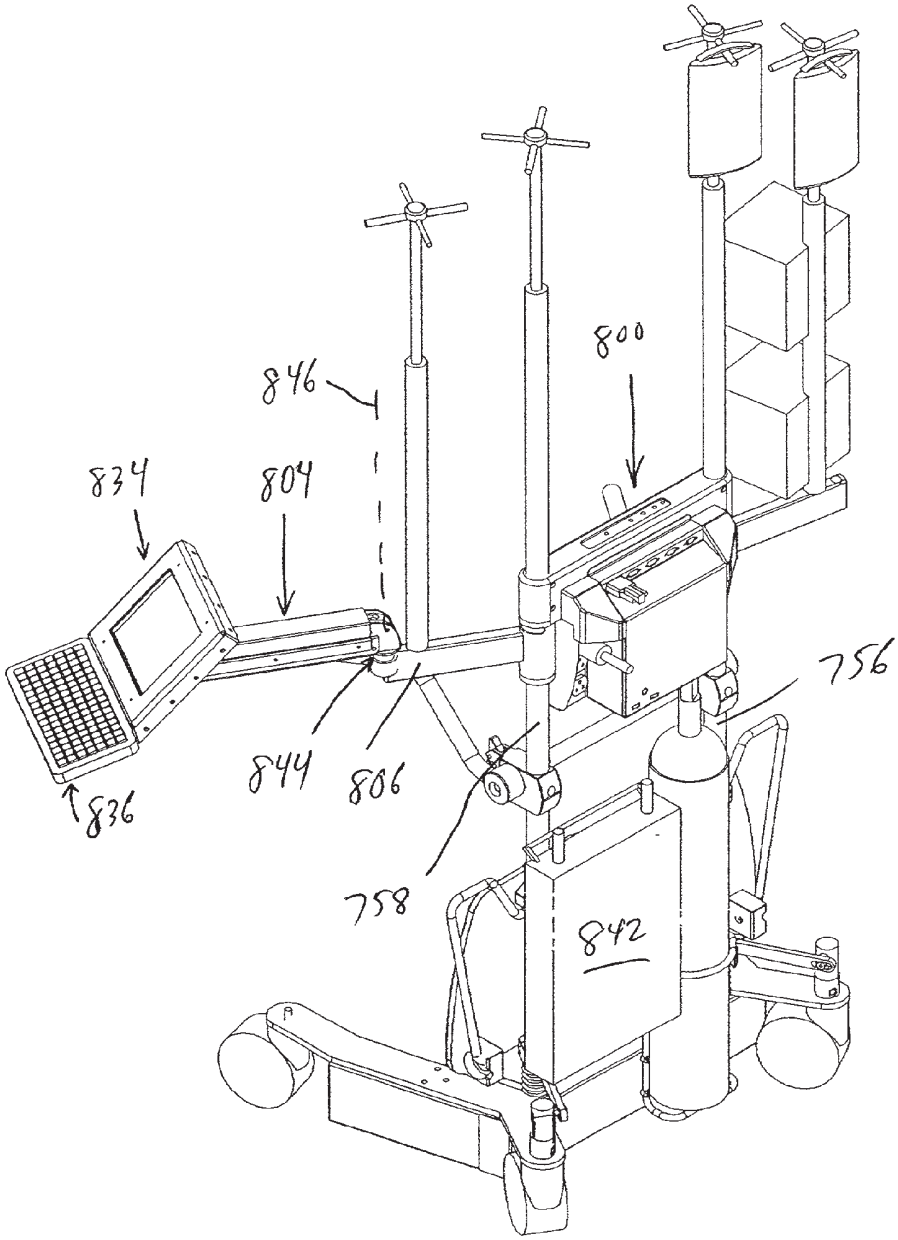

FIG. 5B

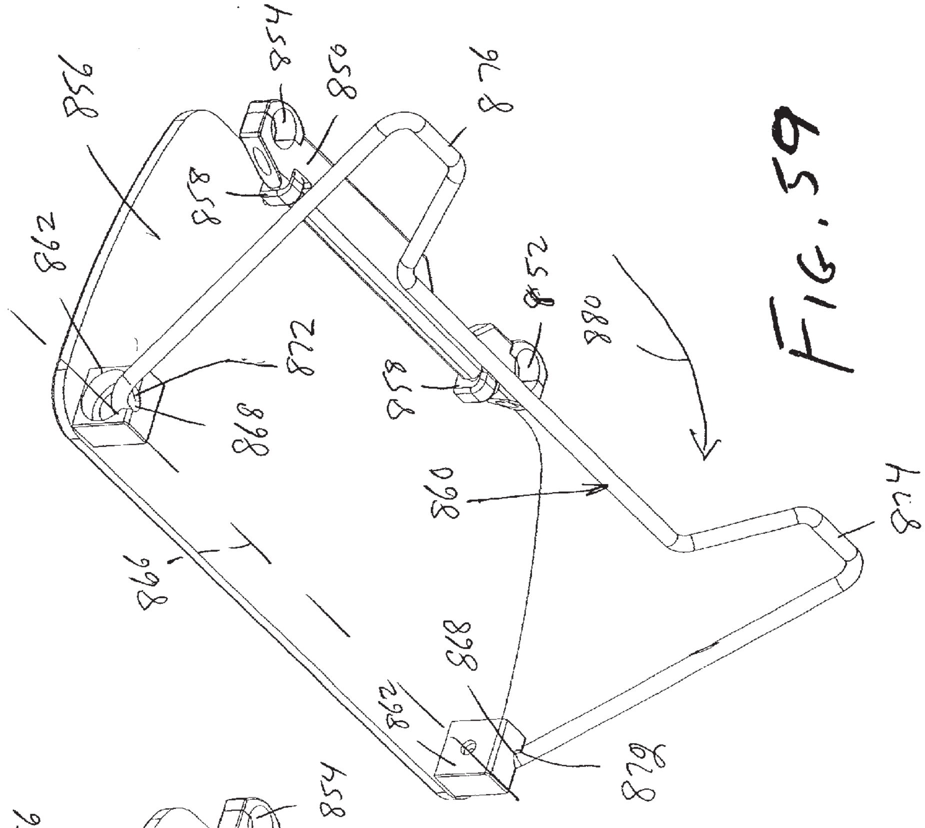
856
854
850
876
862
858
852
880
872
868
858
860
874
866
868
862
829

FIG. 59

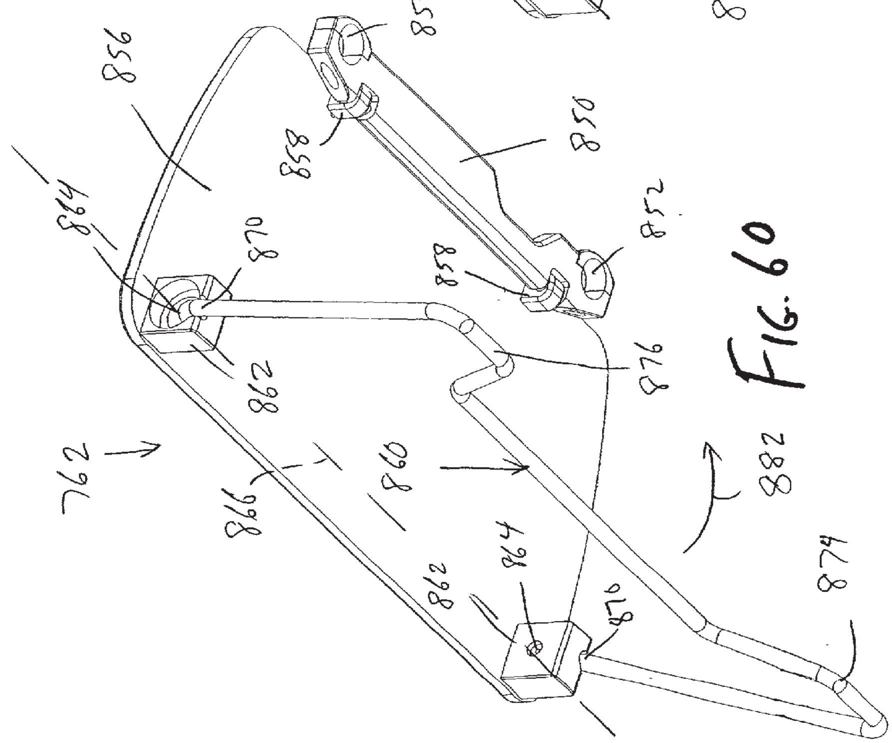
856
854
858
850
864
870
852
858
862
876
762
882
866
860
862
864
876
874

FIG. 60

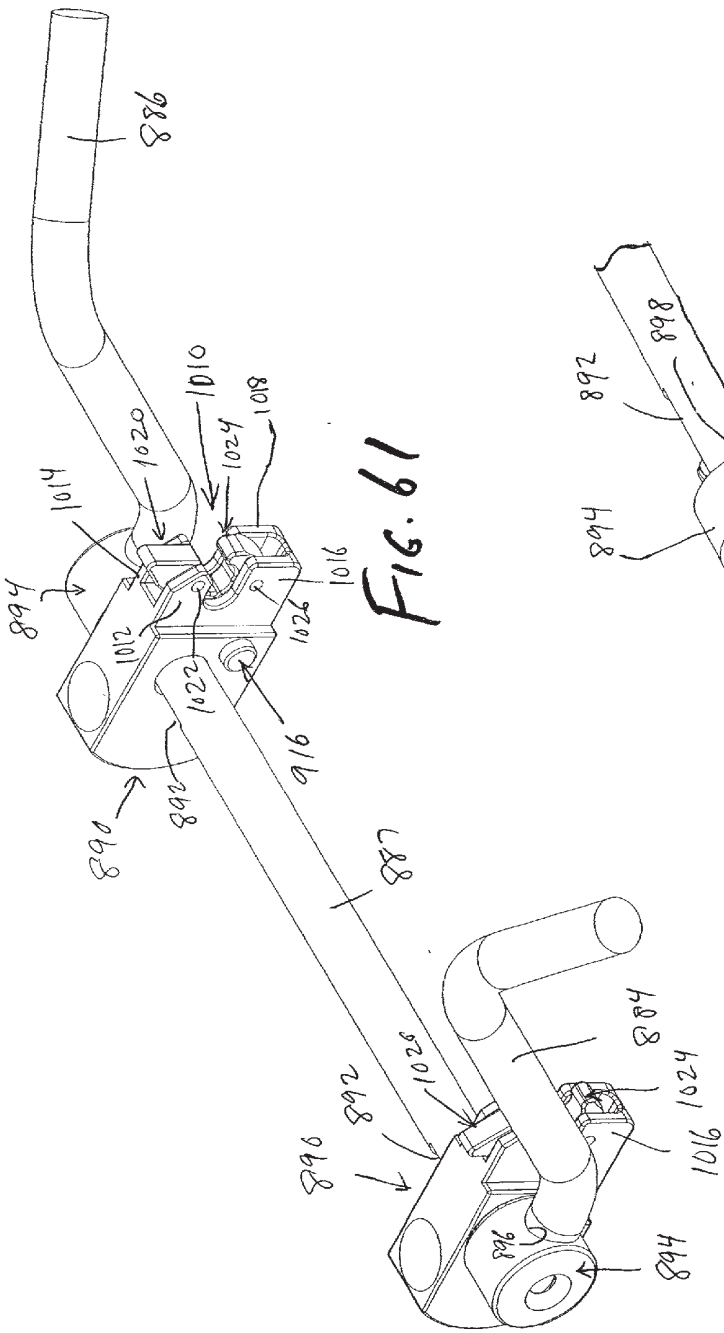
886
1010
1020
1024
1018
1014
894
1016
1026
1012
1022
916
892
890
887
884
1020
892
1024
1016
890
896
894

FIG. 61

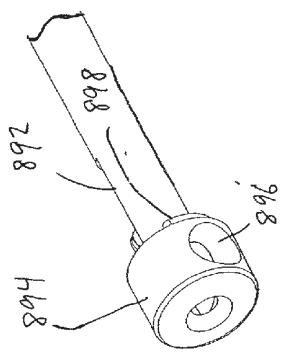
892
898
896
894

FIG. 62

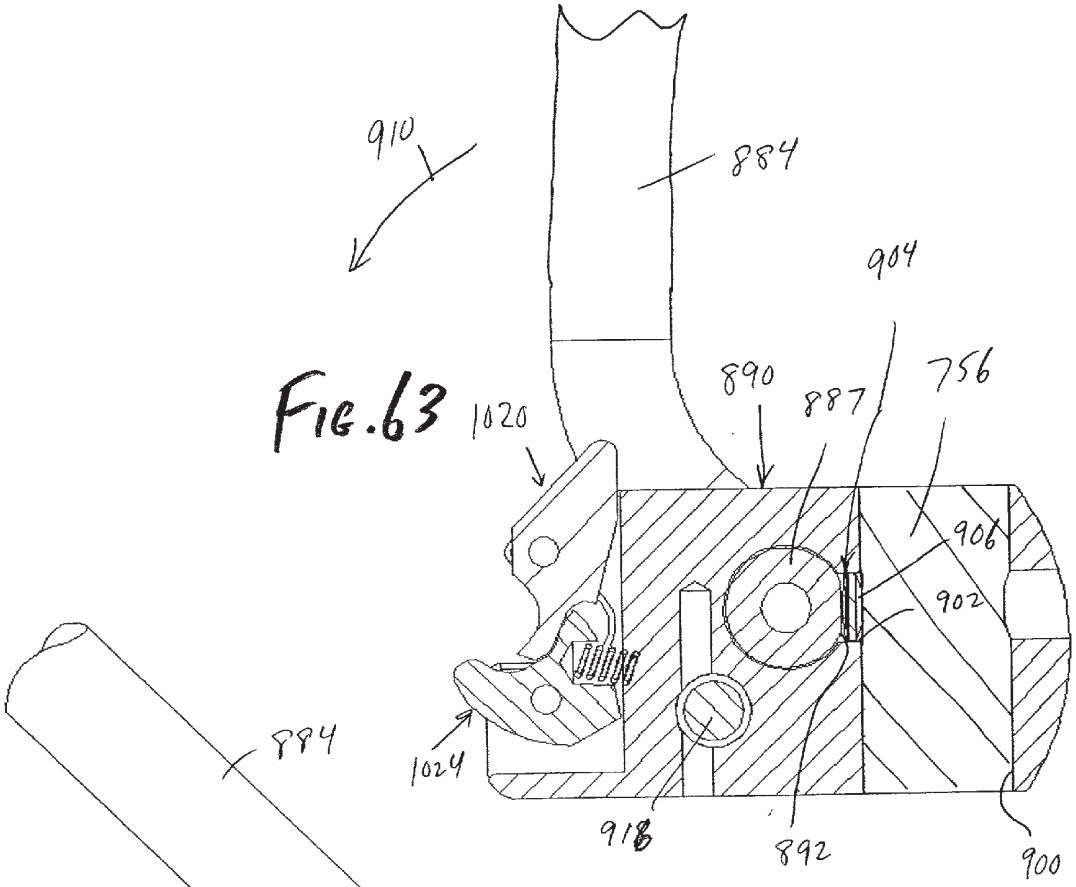
910
884
904
890
887
756
1020
906
902
1024
918
892
900

FIG. 63

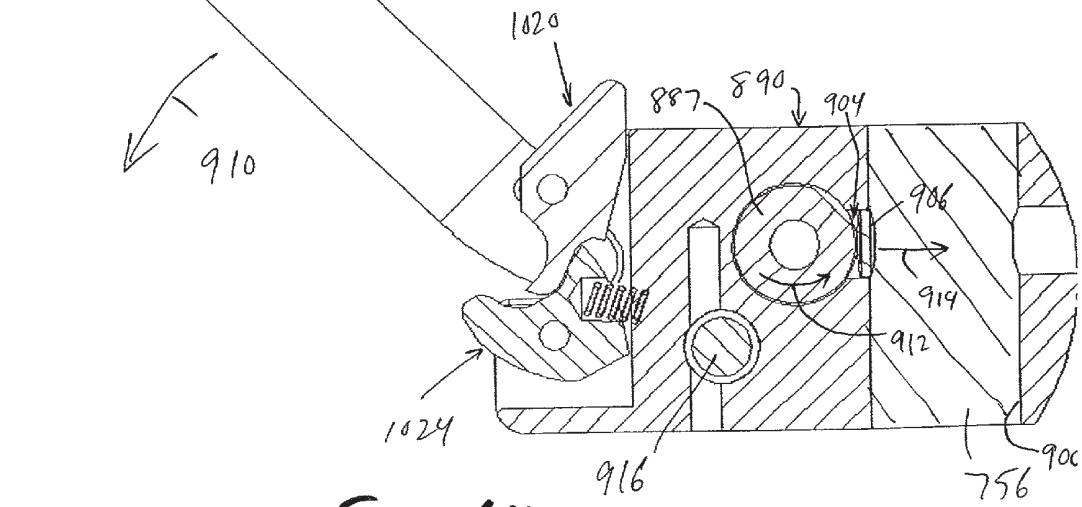
884
1020
887
890
904
910
906
914
912
1024
916
756

FIG. 64

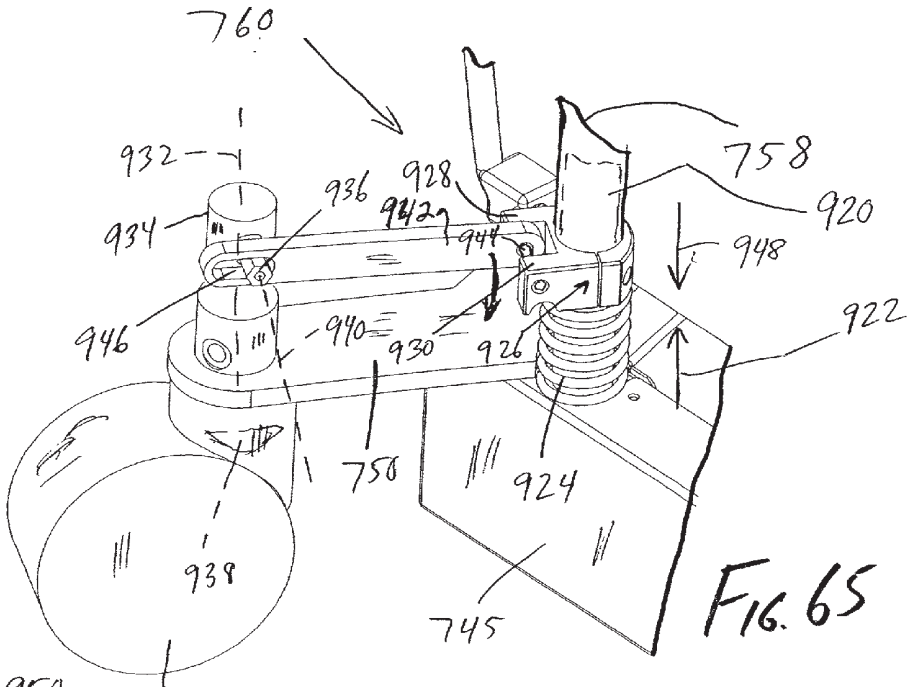
760
932
934
936
928
942
944
758
920
948
946
940
930
926
922
750
924
938
745

FIG. 65

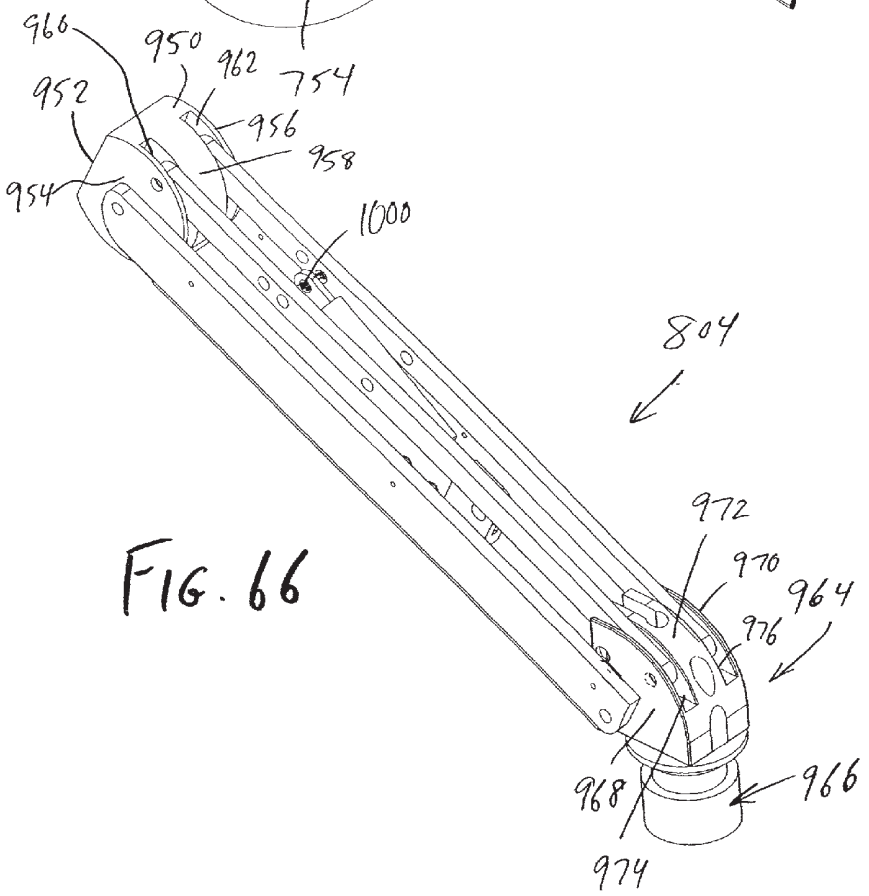
966
950
962
754
952
956
958
954
1000
804
972
970
964
976
968
966
974

FIG. 66

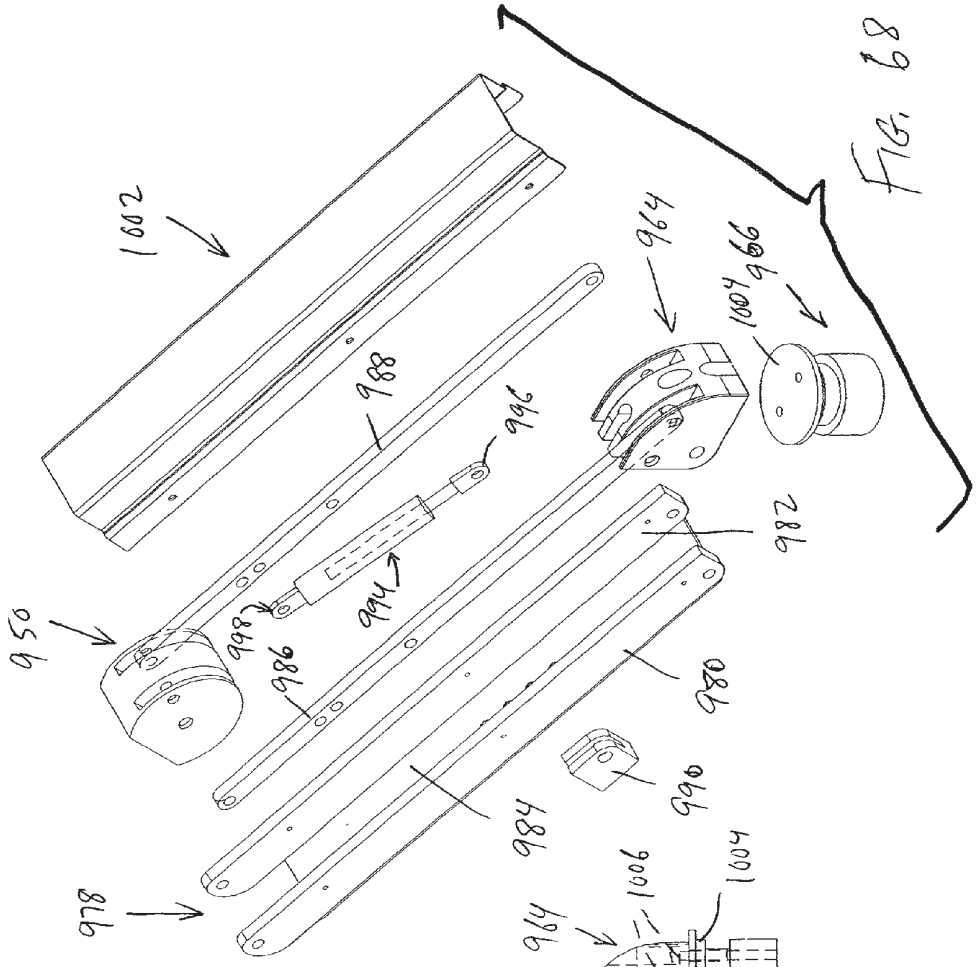
1002
964
1004
966
988
996
982
994
998
950
986
980
990
984
978

FIG. 68

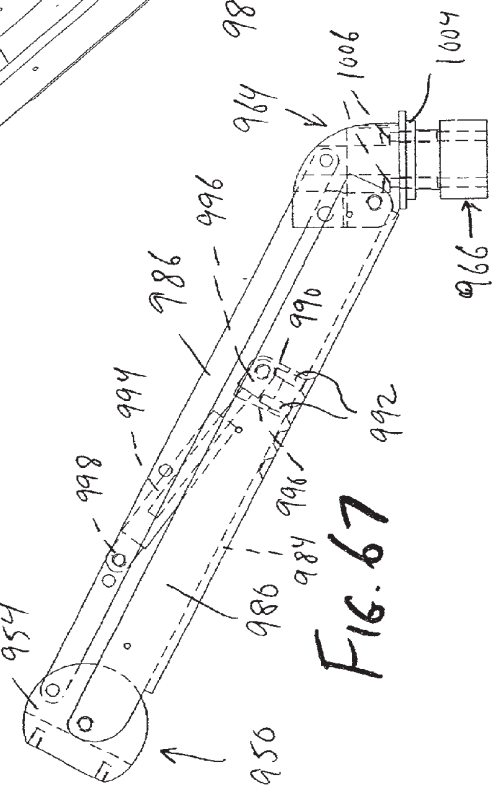
964
1006
1004
996
966
986
990
994
992
998
996
984
986
954
956

FIG. 67

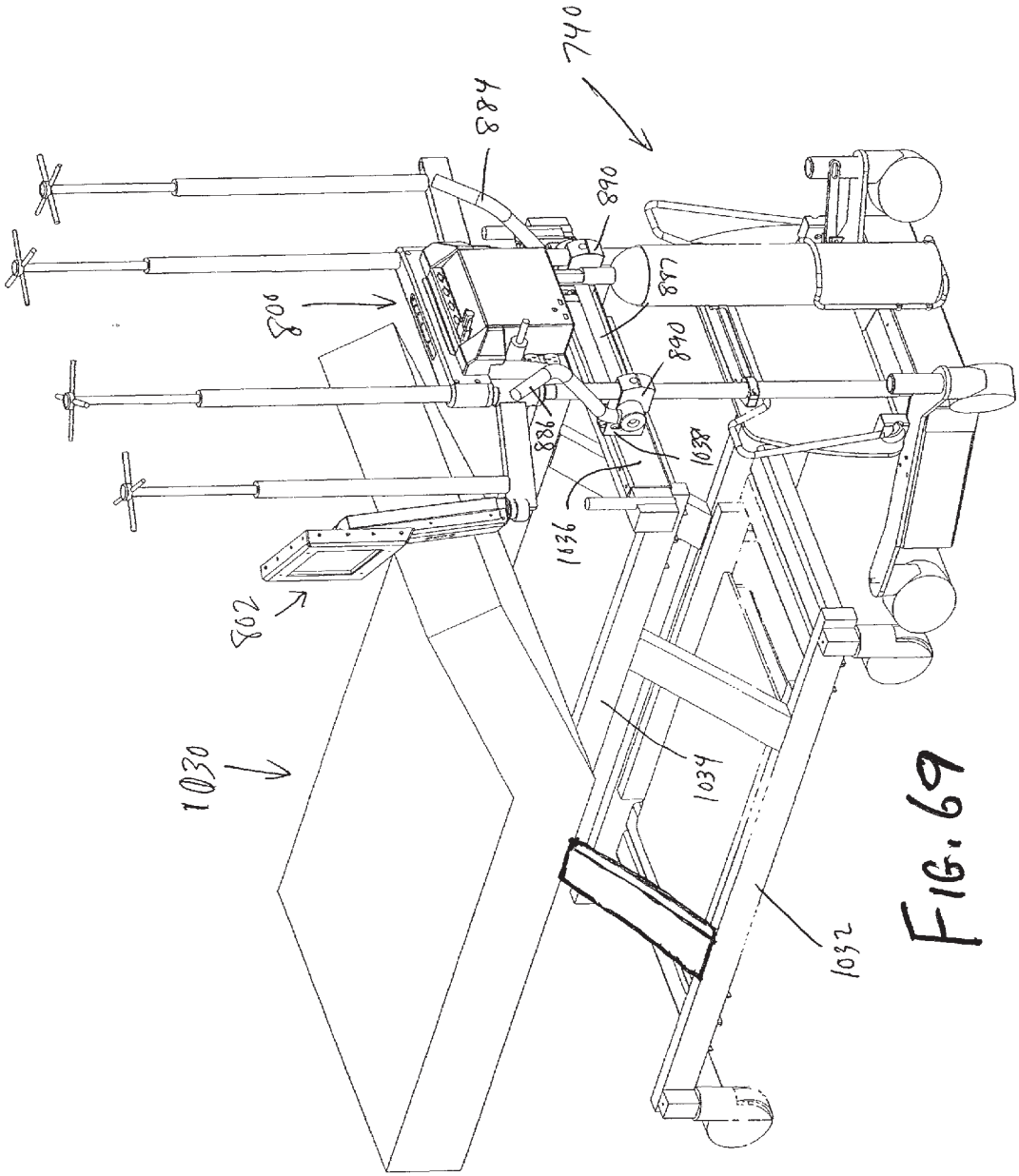

FIG. 69

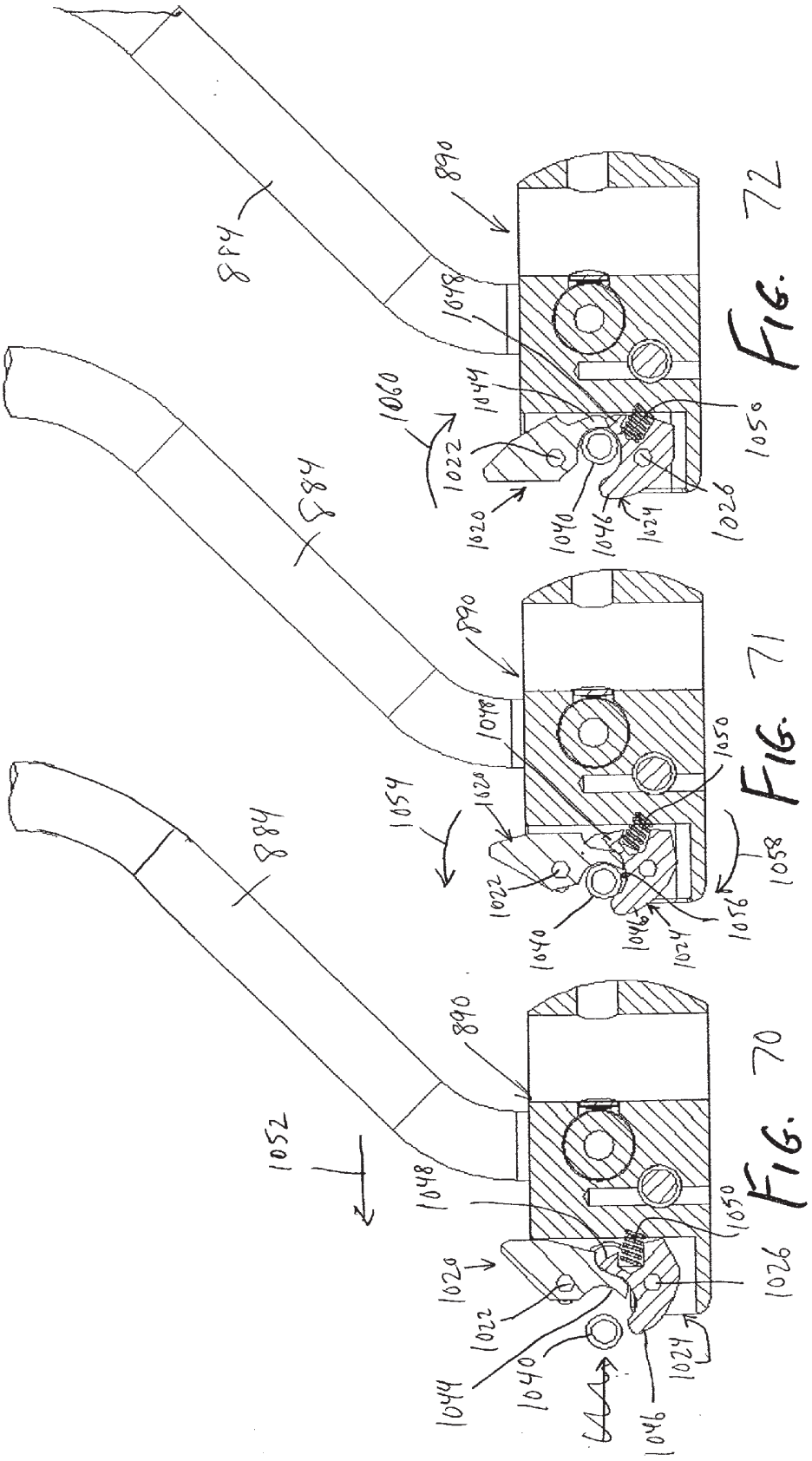

FIG. 70

FIG. 71

FIG. 72

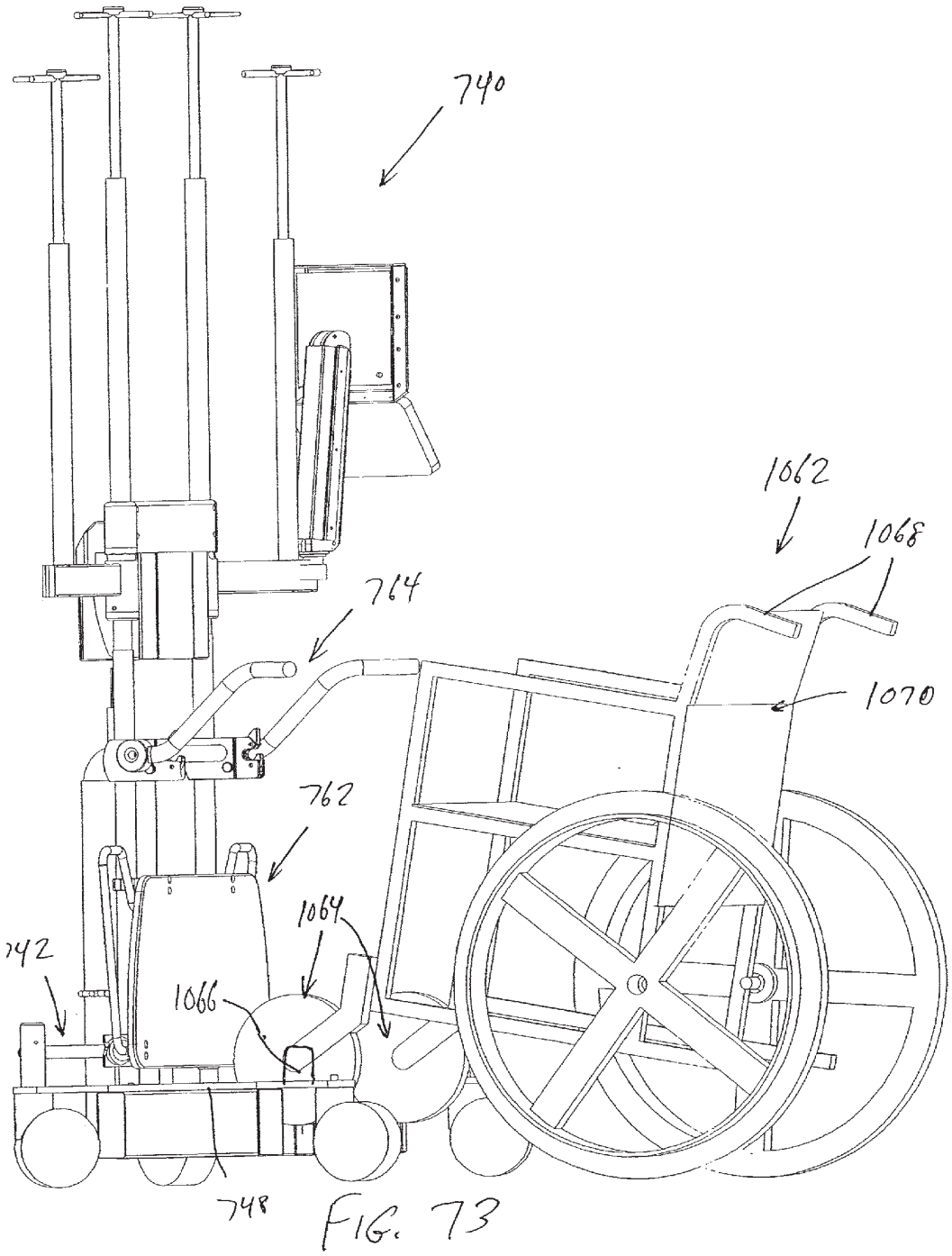

FIG. 73

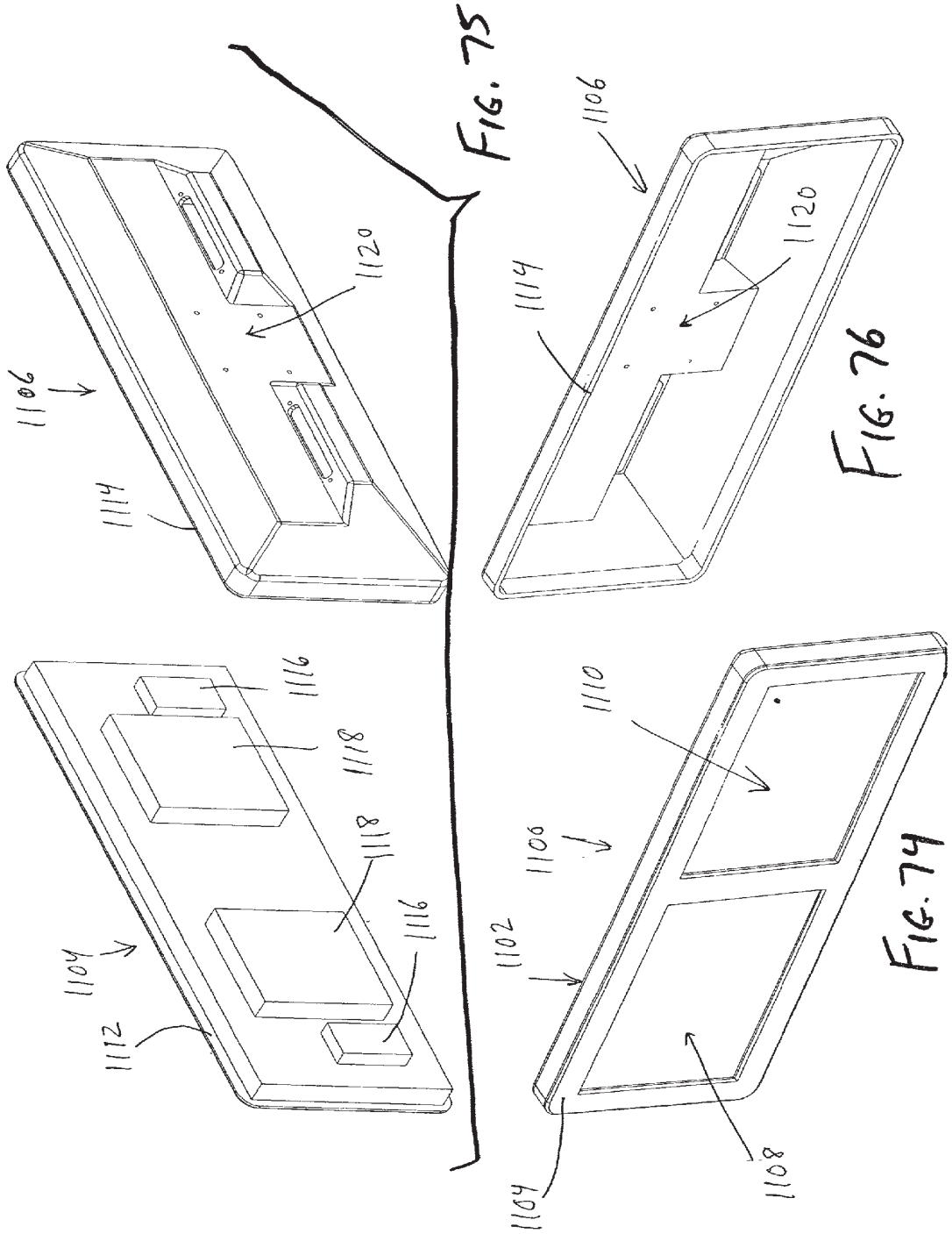

FIG. 75

FIG. 76

FIG. 74

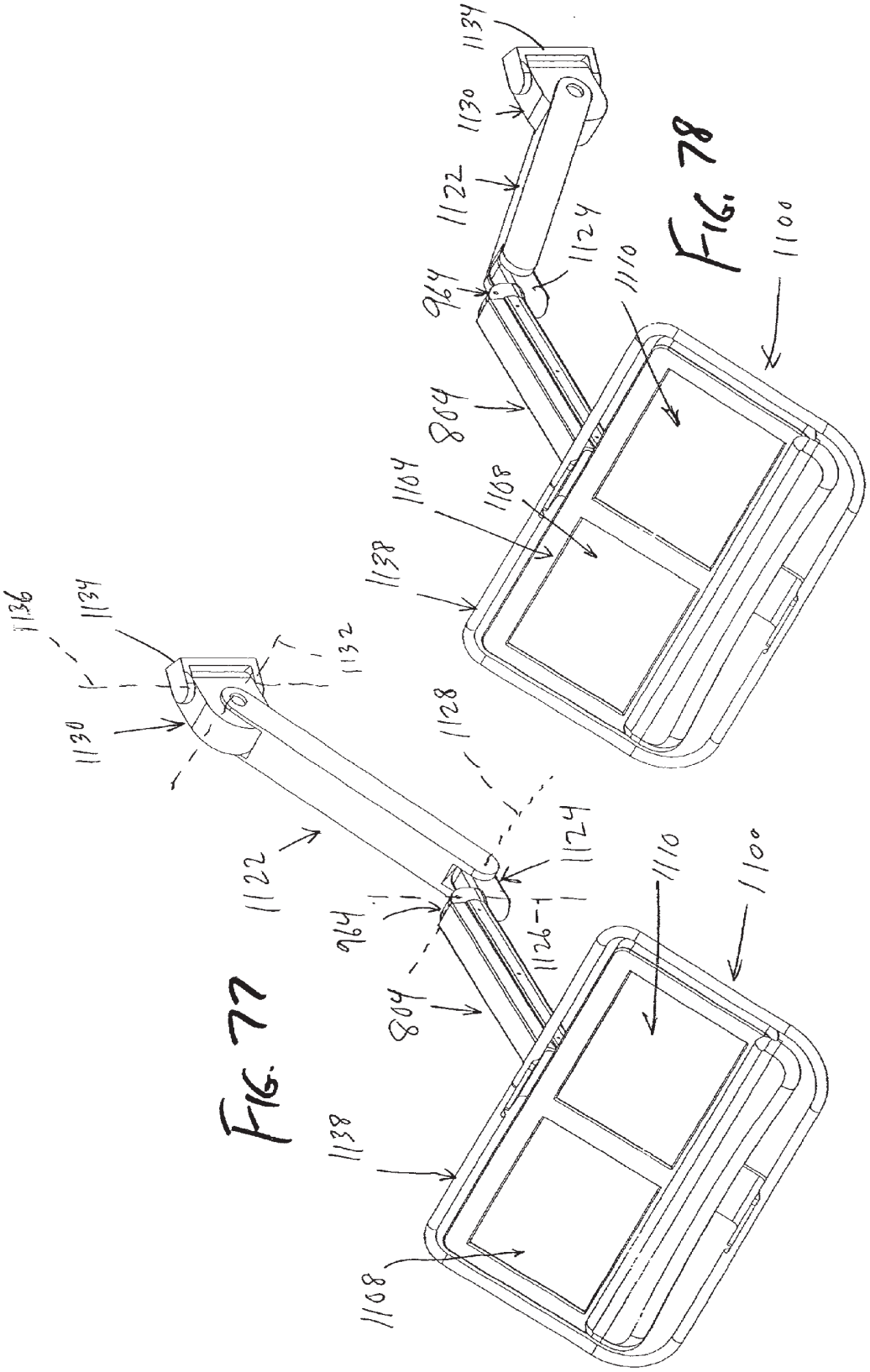
1134
1130
1122
1124
964
804
1110
1100
1104
1108
1138
1136
1132
1128
1126-1

FIG. 78

FIG. 77

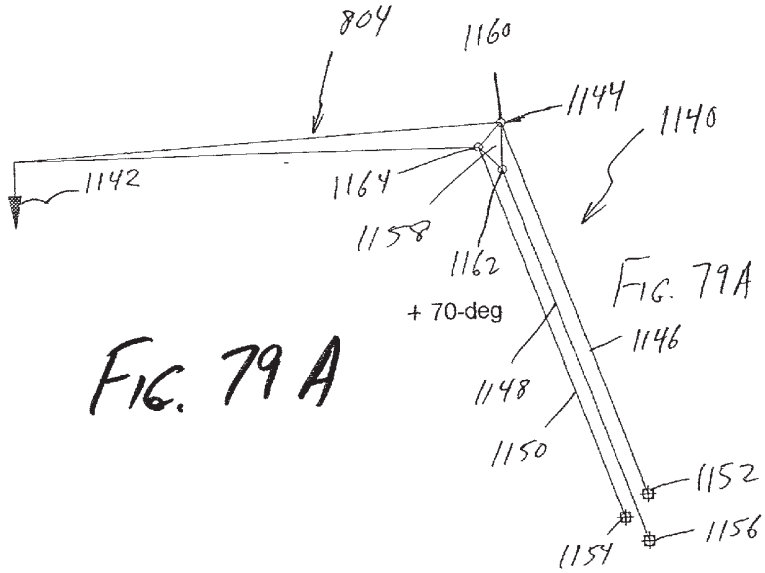

FIG. 79A

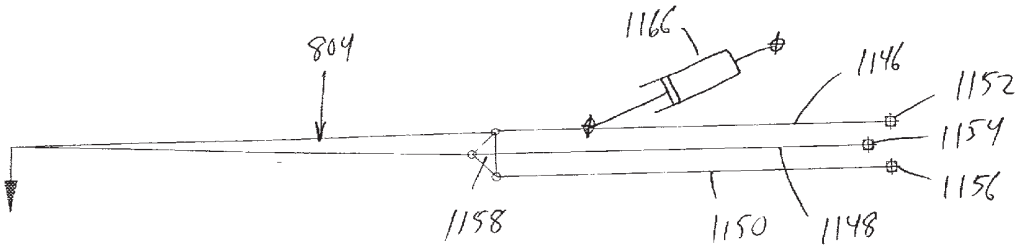

FIG. 79B

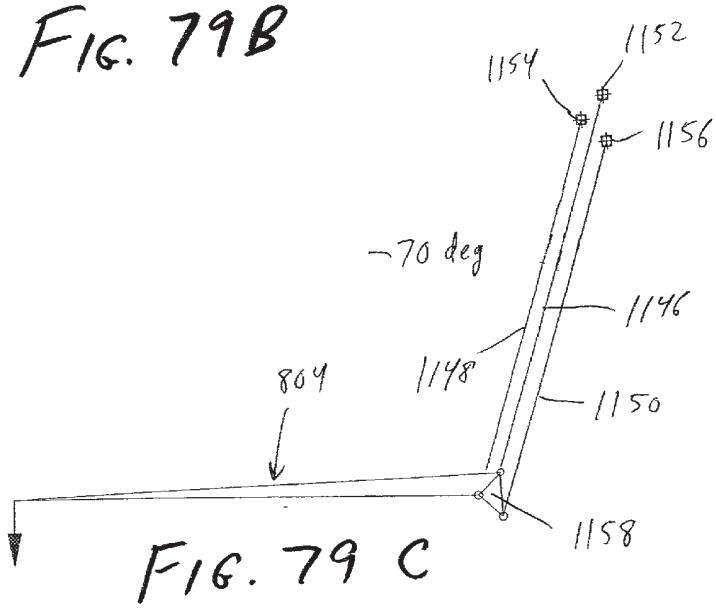

FIG. 79 C

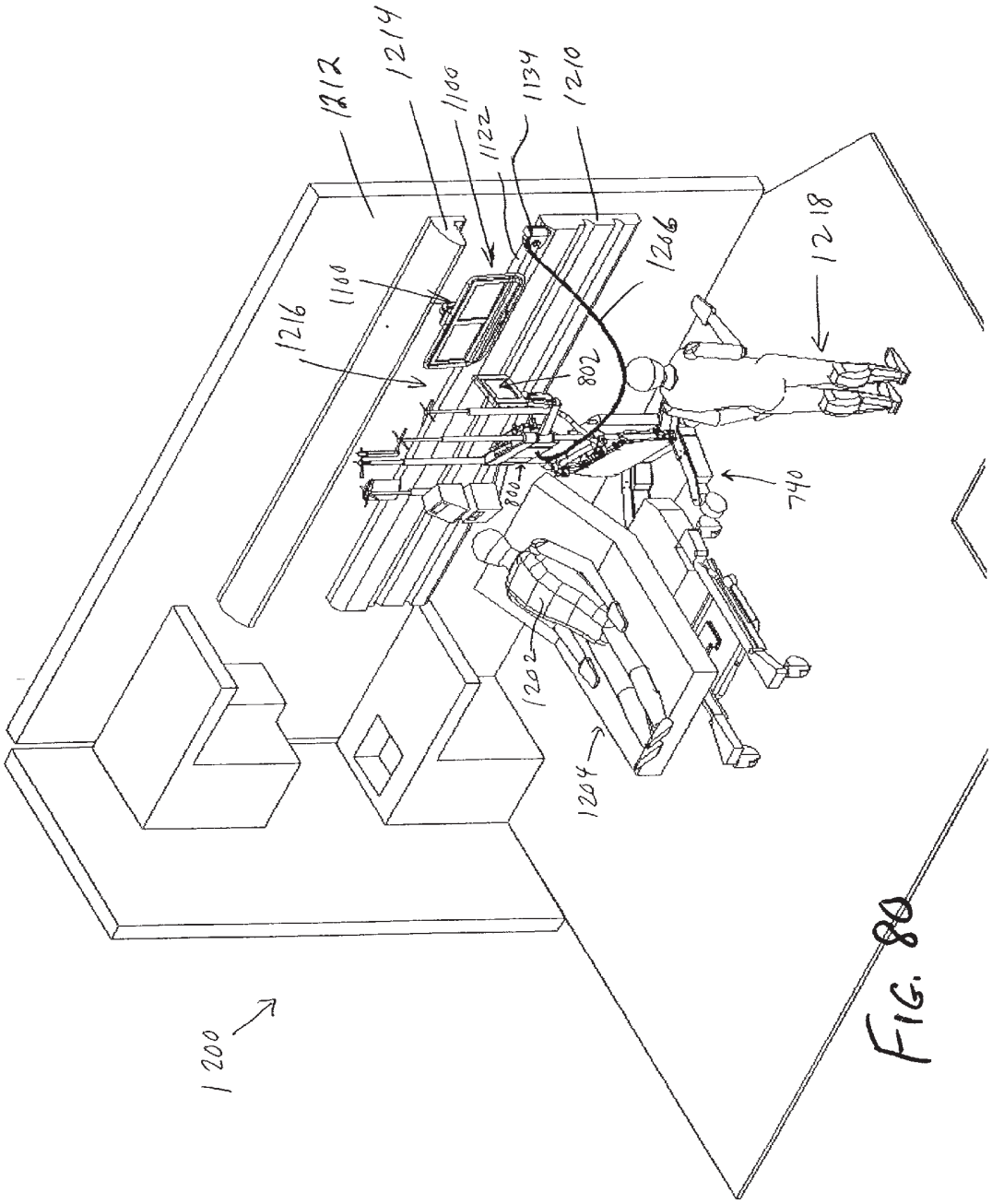
1212
1214
1100
1122
1134
1210
1206
1218
1100
1216
802
800
740
1202
1204
1200

FIG. 80

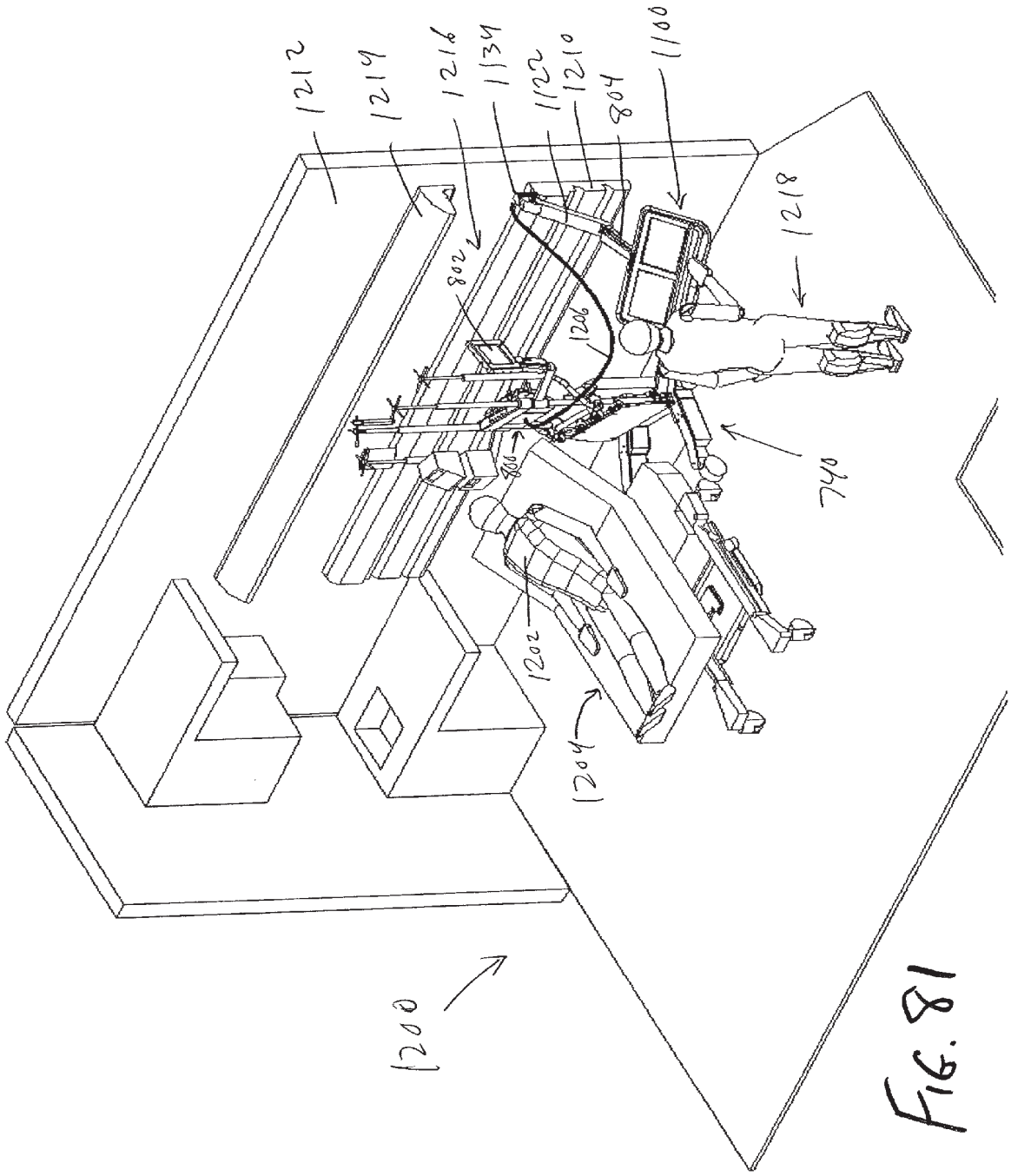
1212
1214
1216
1134
1122
1210
804
1100
1218
802
1206
800
740
1202
1204
1200

FIG. 81

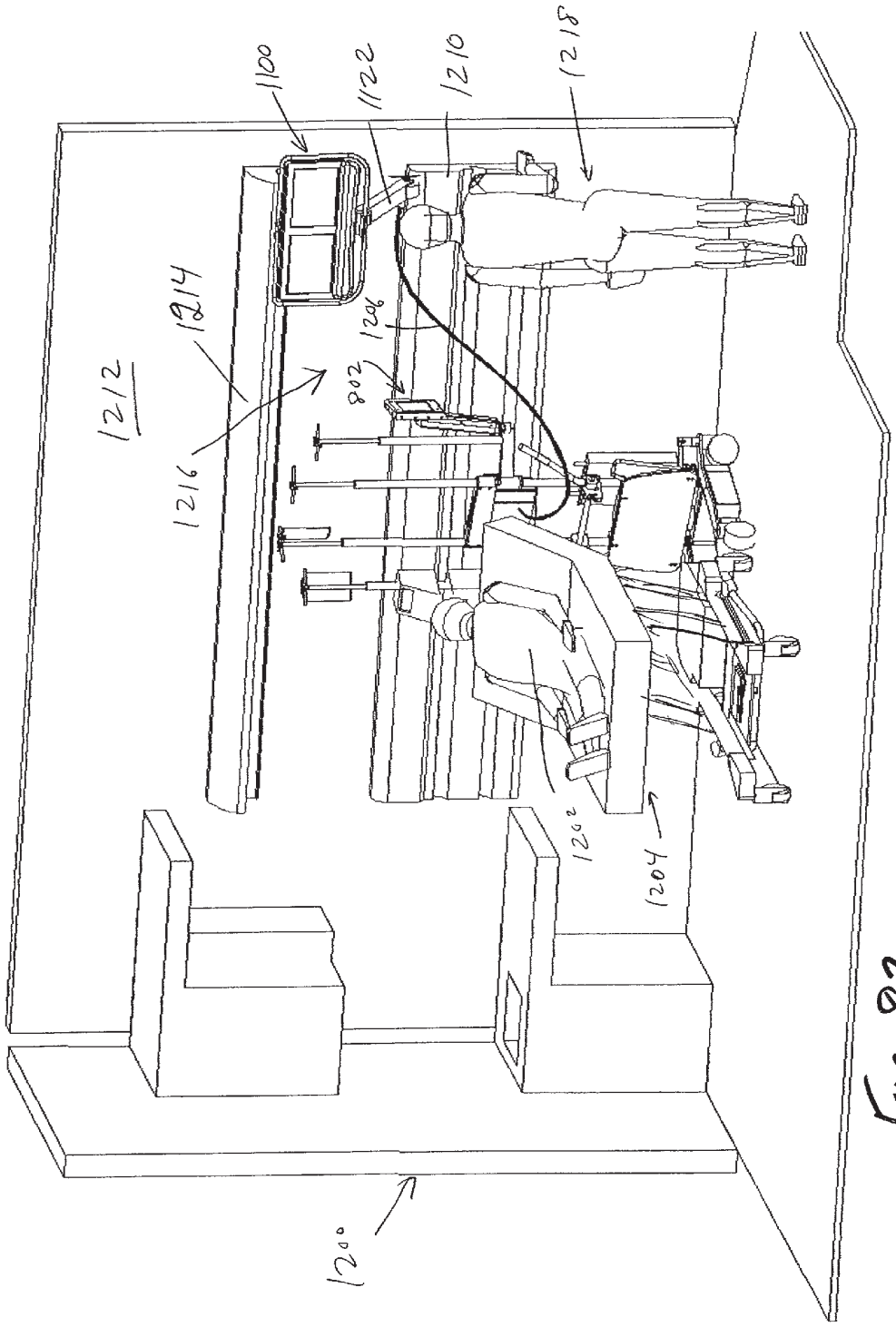

FIG. 82

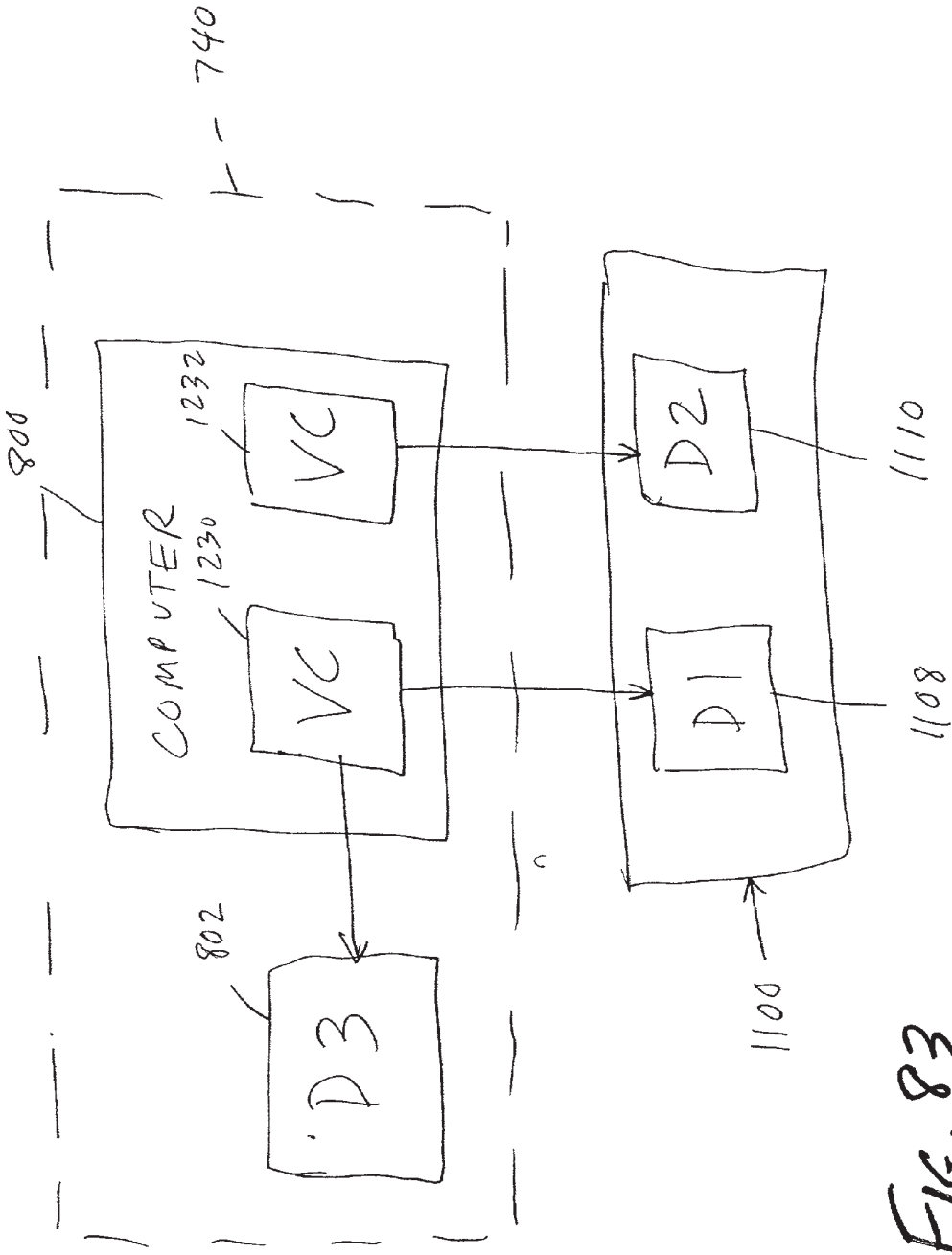

FIG. 83

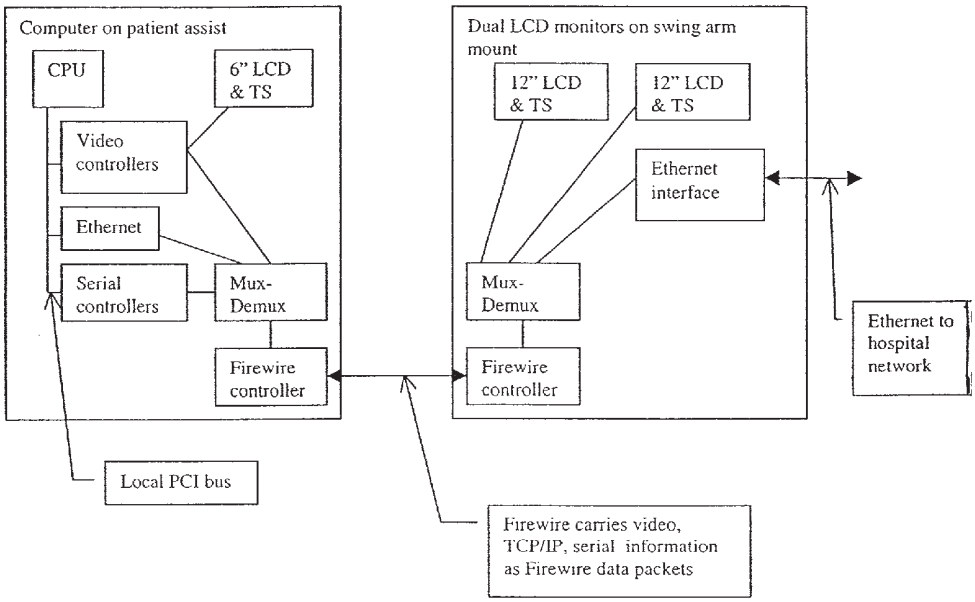
Computer on patient assist
CPU
6" LCD & TS
Video controllers
Ethernet
Serial controllers
Mux-Demux
Firewire controller
Dual LCD monitors on swing arm mount
12" LCD & TS
12" LCD & TS
Ethernet interface
Mux-Demux
Firewire controller
Ethernet to hospital network
Local PCI bus
Firewire carries video, TCP/IP, serial information as Firewire data packets

FIG. 84

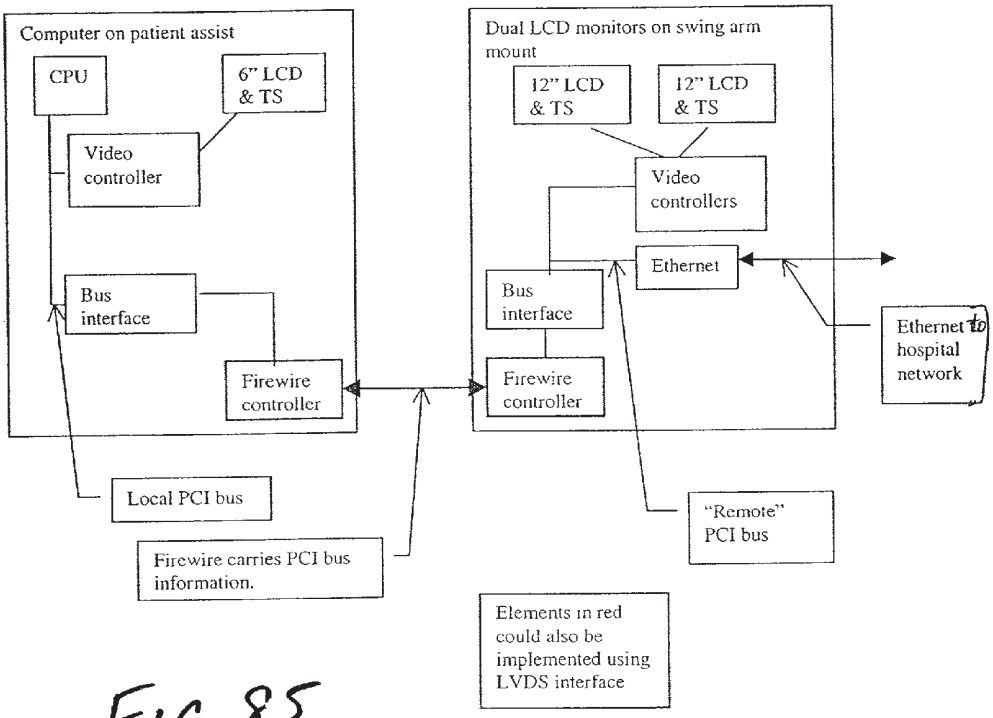
Computer on patient assist
CPU
6" LCD & TS
Video controller
Bus interface
Firewire controller
Dual LCD monitors on swing arm mount
12" LCD & TS
12" LCD & TS
Video controllers
Ethernet
Bus interface
Firewire controller
Ethernet to hospital network
Local PCI bus
Firewire carries PCI bus information.
"Remote" PCI bus
Elements in red could also be implemented using LVDS interface

FIG. 85

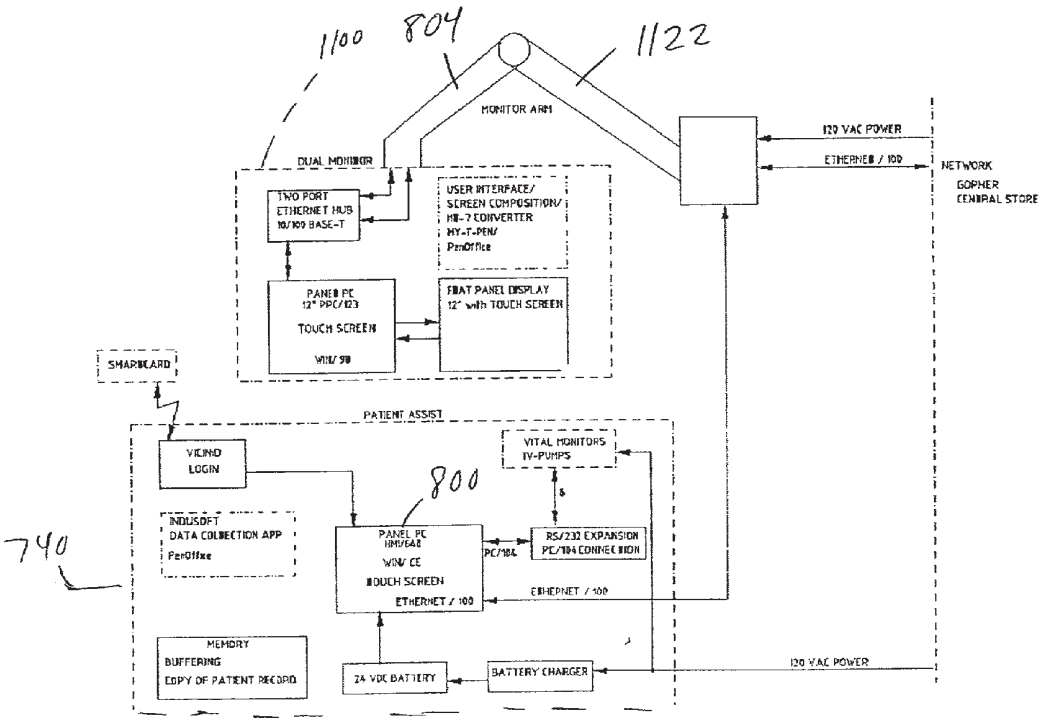
1100
804
1122
MONITOR ARM
120 VAC POWER
ETHERNET / 100
NETWORK
GOPHER
CENTRAL STORE
DUAL MONITOR
TWO PORT
ETHERNET HUB
10/100 BASE-T
USER INTERFACE/
SCREEN COMPOSITION/
HL-7 CONVERTER
HY-T-PEN/
PenOffice
PANEL PC
12" PPC/123
TOUCH SCREEN
WIN/ 98
FLAT PANEL DISPLAY
12" with TOUCH SCREEN
SMARTCARD
PATIENT ASSIST
VICINO
LOGIN
VITAL MONITORS
IV-PUMPS
800
740
INDUSOFT
DATA COLLECTION APP
PenOffice
PANEL PC
WIN/ CE
TOUCH SCREEN
ETHERNET / 100
PC/104
RS/232 EXPANSION
PC/104 CONNECTION
ETHERNET / 100
MEMORY
BUFFERING
COPY OF PATIENT RECORD
24 VDC BATTERY
BATTERY CHARGER
120 VAC POWER

FIG. 86

PATIENT POINT OF CARE COMPUTER SYSTEM

[0001] This application claims the benefit of U.S. provisional application Serial No. 60/202,283 filed May 5, 2000 and U.S. provisional application Serial No. 60/229,136 filed Aug. 30, 2000, both disclosures being expressly incorporated by reference herein.

[0002] The invention relates to a computer system configured to be used at the point of care by the caregiver in a hospital or other health care facility in order to care for patients. The present invention facilitates electronic data entry at the point of care, provides automatic data capture, provides a computer screen with a flow sheet sized proportion, provides access to information at the point of care.

[0003] Providing a computer at the point of care provides access to information from a laboratory, pharmacy, radiology, or other locations away from the point of care where it is needed at the point of care. The computer system of the present invention includes both manual and automated patient data entry at the point of care create an electronic record. The present invention permits caregivers to easily input chart data directly into the computer. In addition, the computer receives information automatically from various monitors and medical devices such as vital signs monitors, IV pumps, and the like. Therefore, all data related to the patient is captured at a single location which is located at the point of care. Logon to the computer system of the present invention may be controlled by an IR or RF badge worn by the nurse or caregiver. The computer is designed to remain with the patients in the hospital room and during ambulation or transportation in the hospital. In other words, the computer follows the patient wherever the patient goes from admit to discharge.

[0004] Providing a computer at the point of care improves communication. Lab and radiology results are presented electronically to the ordering and consulting physicians at the point of care. The computer system of the present invention facilitates patient care by virtual teams which never actually meet when caring for the patient. The computer system instantaneously captures information related to the patient as well as laboratory procedures and diagnostic procedures ordered for the patient. Information is displayed in an electronic chart or flow sheet on a display. Illustratively, two adjacent display screens are used to display the patient information. There is little delay in inputting this information to the patient's chart. Such delays often occur with conventional paper charts. Therefore, the present invention reduces the likelihood of ordering redundant lab or diagnostic work on the patient. Electronic referrals, authorizations, and consultations are fast, secure and reliable. E-mail or intranet communications are used to transmit data and automate prescriptions, lab orders, and work flow.

[0005] A computer system provides updated access to information and communication at the point of care. Patient data is stored in a memory of the computer or in a main server coupled to the computer by a communication network. Access to all patient information is available to physicians, pharmacy, radiology, lab, cath lab, or any PC connected to the computer at the point of care through a communication network. Doctors or other caregivers at remote locations can view information related to the patient by connecting to the patient's computer or the main server through the communication network. In other words, the computer system acts as a node on the network and can access information from other nodes.

[0006] The present invention is also able to capture costs of services and transmit the cost information for billing purposes. For instance, the computer system of the present invention uses a wireless data receiver to receive signals from a badge on the caregiver and from tags on equipment located within the hospital room. Therefore, the computer system of the present invention can determine the actual cost of providing services to the patient. The computer system also includes an input device such as, for example, a keyboard or a bar code reader to capture costs of medication or other treatment or articles used by the patient.

[0007] The system of the present invention may be used with the COMposer® communication system available from Hill-Rom. Some details of the COMposer® system are disclosed in U.S. Pat. Nos. 5,561,412; 5,699,038; and 5,838,223 which are incorporated herein by reference.

[0008] In an illustrated embodiment of the present invention, a patient monitoring system comprises a computer, an input device coupled to the computer and configured to input patient information, and first and second display screens coupled to the computer. The computer displays a first portion of the patient information on the first display screen and a second portion of the patient information on the second display screen.

[0009] In an illustrated embodiment of the present invention, a system comprises a computer including a memory, and a medical device for treating a patient. The medical device includes an indicator configured to provide a signal indicating when the medical device is in use to treat the patient. The system also includes a coupler coupled to the computer for receiving the input signal from the indicator. The computer is configured to store the amount of time that the medical device is in use to treat the patient in the memory.

[0010] In one illustrated embodiment, the computer is configured to generate a bill for use of the medical device based upon the amount of time that the medical device is used to treat the patient. The medical device illustratively includes a unique identification so that the computer generates an itemized bill indicating the particular medical device used to treat the patient.

[0011] In another illustrated embodiment of the present invention, patient care computer system is provided for use by a caregiver wearing an identification badge which includes a wireless data transmitter that uniquely identifying each caregiver. The apparatus comprises a computer including a memory for storing patient information, a display screen coupled to the computer, an input device coupled to the computer for inputting patient information, a wireless data receiver coupled to the computer, and means for detecting when a caregiver enters a room in which the computer and patient are located. The detecting means determines whether the caregiver is authorized to use the computer system and, if so, automatically logging the caregiver in to the computer system.

[0012] In another illustrated embodiment of the present invention, a system comprises means for monitoring at least one physiological condition of a patient on a real time basis, means for recording information related to a treatment of the

patient and the time that the treatment was given to the patient, and means for determining the effectiveness of the treatment of the patient by further monitoring the physiological conditions on a real time basis after the treatment.

[0013] In another illustrated embodiment of the present invention, a computer system assigned to a patient or to a bed, cart or other device upon which the patient rests or with which the patient is associated. The system comprises a computer, and a plurality of devices for sensing various physical conditions and characteristics of the patient. Each device has an output coupled to the computer. The system also includes a display arranged to present information related to the patient.

[0014] In another illustrated embodiment of the present invention, a system for monitoring patient information comprises a processor, a memory coupled to the processor, a user interface coupled to the processor to permit a caregiver to input instructions into the system, a display screen coupled to the processor, a power supply coupled to the processor, and a connector module configured to couple the system to a medical device including at least one of a physiological monitor, a treatment device, and a therapy device. The medical device uses the processor, the user interface, the power supply, and the display of the system to operate the medical device, thereby reducing redundant components in the medical device.

[0015] In another illustrated embodiment of the present invention, a patient monitoring system comprises a computer, a display screen coupled to the computer, and a plurality of physiological monitors coupled to the computer. The computer displays at least two indicators on the display screen related to at least two of a heart rate signal, a respiratory rate, fluid/electrolyte/nutrition information, temperature, neurological monitoring, and blood pressure.

[0016] In another illustrated embodiment of the present invention, a patient assist apparatus comprises a base having a plurality of casters, a support coupled to the base, an IV pole coupled to the support, and a brake mechanism coupled to at least one of the casters and to the support. The brake mechanism is configured to brake the at least one caster when a predetermined weight is applied to the support.

[0017] In the illustrated embodiment, the apparatus further comprises a spring configured to bias the support upwardly relative to the base and a link coupled between the support and the brake mechanism. The support moves downwardly when the predetermined weight is applied to the support, thereby moving the link to actuate the brake mechanism.

[0018] In another illustrated embodiment of the present invention, a walker apparatus comprises a base and a support coupled to the base. The support includes a handle configured to be gripped by a patient. The walker apparatus also includes a seat having a first end portion and a spaced apart second end portion. The first end portion is pivotably coupled to the support so that the seat is movable between an upwardly pivoted seating position and a downwardly pivoted storage position. The walker apparatus further includes a seat support pivotably coupled to the second end portion of the seat. The seat support is movable from a first position aligned generally parallel with the seat and a second position aligned transverse to the seat to support the seat in the seating position.

[0019] In the illustrated embodiment, the apparatus includes a coupler configured to attach the seat support to the seat, the coupler being configured to hold the seat support in the second position automatically when the seat is moved to its upwardly pivoted seating position.

[0020] In another illustrated embodiment of the present invention, a patient assist apparatus comprises a walker having a handle to assist movement of a patient, a computer coupled to the walker, a display coupled to the computer, and a movable arm having a first end coupled to the walker and a second end coupled to the display.

[0021] In another illustrated embodiment of the present invention, a patient assist apparatus comprises a base having a plurality of casters and a support coupled to the base, the support having first and second sides. The apparatus also includes a latch mechanism coupled to the first side of the support. The latch mechanism is configured to couple the support to a patient support apparatus. The apparatus further includes a handle assembly coupled to the support. The handle assembly includes first and second handles movable from a first orientation located on the first side of the support to provide support handles for a patient to a second orientation located on the second side of the support to provide push handles for use when the support is coupled to the patient support apparatus. In the illustrated embodiments, the patient support apparatus is a bed or a wheelchair.

[0022] In another illustrated embodiment of the present invention, a patient computer system comprises a display having first and second display screens located in a room, a cart configured to move with a patient outside the room and to remain with the patient inside the room, a computer coupled to the cart, and a third display screen coupled to the cart. The computer is coupled to the third display screen and coupled to the first and second display screens when the cart is in the room.

[0023] In the illustrated embodiment, the computer includes first and second video cards. The first video card is configured to drive the first and third display screens, and the second video card is configured to drive the second display screen.

[0024] In another illustrated embodiment of the present invention, a display for a computer comprises a housing having an interior region, a first display screen located in a first portion of the interior region of the housing, and a second display screen located in a second portion of the interior region of the housing. The first and second display screens are coupled to the computer so that the computer displays information on both the first and second display screens. In an illustrated embodiment, the housing includes a first portion and a second portion coupled to the first portion by a waterproof seal.

[0025] Additional features of the invention will become apparent to those skilled in the art upon consideration of the following detailed description of the illustrated embodiment exemplifying the best mode of carrying out the invention as presently perceived.

BRIEF DESCRIPTION OF THE DRAWINGS

[0026] The detailed description particularly refers to the accompanying figures in which:

[0027] **FIG. 1** is a block diagram illustrating components of the patient point of care computer system of the present invention;

[0028] **FIGS. 2 and 3** illustrate one embodiment of the computer system of the present invention;

[0029] **FIGS. 4 and 5** illustrate another embodiment of the computer system of the present invention;

[0030] FIGS. **6-8** illustrate yet another embodiment of the computer system of the present invention;

[0031] **FIGS. 9 and 10** illustrate a further embodiment of the computer system of the present invention;

[0032] **FIG. 11** is a perspective view illustrating the computer system of the present invention in an emergency room;

[0033] **FIG. 12** is a perspective view illustrating the computer system of the present invention in a neonatal intensive care unit;

[0034] **FIG. 13** is a perspective view of a computer system module of the present invention within an examination room at a doctor's office or other location;

[0035] **FIG. 14** is a perspective view illustrating the computer system of the present invention communicating with a badge on a caregiver and tags on equipment within the room for monitoring services provided to the patient;

[0036] FIGS. **15-17** illustrate an embodiment of the present invention in which the computer system is mounted on an IV pole located within a socket on a hospital bed;

[0037] **FIG. 18** is a perspective view illustrating a computer module of the present invention installed on a cart;

[0038] **FIG. 19** is a perspective view illustrating a junction box for providing wireless data transmission of a plurality of medical devices to the computer system of the present invention;

[0039] **FIG. 20** is a perspective view illustrating a computer module of the present invention attached to a patient assist device used for patient egress;

[0040] **FIG. 21** is a perspective view illustrating the patient assist device including the computer module used as an IV pole in the hospital room;

[0041] **FIG. 22** is a side elevational view illustrating the patient assist and computer module docked to a wheelchair;

[0042] **FIG. 23** is a perspective view illustrating the patient assist device coupled to a hospital bed for transport of the patient with the computer module of the present invention;

[0043] **FIG. 24** is a perspective view illustrating the patient assist device uncoupled from the hospital bed and left in the room with the patient for a diagnostic procedure;

[0044] FIGS. **25-27** illustrate one embodiment of a workstation for use with the computer system of the present invention;

[0045] **FIGS. 28 and 29** illustrate another embodiment of a workstation;

[0046] **FIG. 30** is a perspective view illustrating yet another workstation including the computer system of the present invention;

[0047] **FIG. 31** is a perspective view of a support stand for receiving a computer module;

[0048] **FIGS. 32 and 33** illustrate another stand for receiving the computer system;

[0049] **FIG. 34** is a block diagram illustrating inputs to the electronic flow sheet or chart generated by computer **12** on display screens **18** and **20**;

[0050] **FIG. 35** is a block diagram of the present invention in which medical device modules are coupled to a central station to reduce redundant systems in the medical devices;

[0051] FIGS. **36-38** illustrate a modular system shown diagrammatically in **FIG. 34**;

[0052] **FIGS. 39 and 40** illustrate a computer integrated with an overbed table for use by a patient in the hospital room;

[0053] **FIG. 41** illustrates another embodiment of a display apparatus configured to be coupled to the computer of the present invention including a first stationary display and a second removable display which is smaller than the first stationary display;

[0054] **FIG. 42** is a perspective view of another embodiment of the present invention illustrating a module configured to be coupled directly to the patient, to the patient support, or to the patient assist device for receiving signals from physiological monitors and using telemetry to transmit these monitor signals to the computer or to a server located at a remote location;

[0055] **FIG. 43** is another embodiment of the present invention illustrating a computer module and a third display located in a separate housing from the first and second displays located in the hospital room, the computer module and the third display being mounted to the patient support apparatus;

[0056] **FIG. 44** is an illustrative display screen of one embodiment of the present invention;

[0057] **FIGS. 45 and 46** illustrate another embodiment of a movable work station including a movable cart for supporting a computer system of the present invention;

[0058] **FIGS. 47A, 47B**, and **48** are illustrated examples of the types of display information and data entry capabilities of the computer system of the present invention;

[0059] **FIG. 49** is a perspective view of another embodiment of a patient assist cart having a computer mounted thereon;

[0060] **FIG. 50** is a perspective view of the patient assist cart of **FIG. 49** with the computer removed;

[0061] **FIG. 51** is a perspective view of the computer of **FIG. 49** removed from the patient assist cart;

[0062] **FIG. 52** is a side elevational view of the computer of **FIG. 51**;

[0063] **FIG. 53** is a perspective view of another embodiment of the present invention illustrating the computer display screen mounted on a movable support arm on the patient assist cart, a seat in an upwardly pivoted patient support position, and push handles in a first position;

[0064] **FIG. 54** is a perspective view of the patient assist cart of **FIG. 53** illustrating the patient support seat in a downwardly pivoted storage position and illustrating push handles moved to a second position for pushing a bed or other device coupled to the patient assist cart;

[0065] **FIGS. 55 and 56** are perspective views illustrating components of a computer coupled to the cart of **FIGS. 53 and 54**;

[0066] **FIG. 57** is a perspective view of the patient assist cart of **FIGS. 53 and 54** with additional equipment loaded on the cart;

[0067] **FIG. 58** is a perspective view of the cart of **FIG. 55** illustrating movement of display screen and an input device on a movable arm;

[0068] **FIGS. 59 and 60** illustrate operation of a seat of the patient assist cart;

[0069] **FIGS. 61 and 62** illustrate a latching mechanism and movable push handles of the patient assist cart;

[0070] **FIGS. 63 and 64** illustrate a mechanism for securing and unsecuring the push handles relative to a support post of the patient assist cart;

[0071] **FIG. 65** illustrates a castor breaking apparatus of the present invention;

[0072] FIGS. **66-68** illustrate a support arm for the display screen of the computer;

[0073] **FIG. 69** illustrates the patient assist cart coupled to a hospital bed;

[0074] FIGS. **70-72** illustrate operation of a latching mechanism for coupling the bed or another device to the patient assist cart;

[0075] **FIG. 73** illustrates the patient assist cart coupled to a wheelchair.

[0076] FIGS. **74-76** illustrate details of a sealed housing configured to receive first and second display screens;

[0077] **FIGS. 77 and 78** illustrate a support arm for coupling a dual screen display housing to a wall, cart or other device;

[0078] FIGS. **79**A-C illustrates another embodiment of a primary support arm of the present invention.

[0079] FIGS. **80-82** illustrate various orientations fo the dual screen display in a hospital room;

[0080] **FIG. 83** illustrates details of video cards in a computer coupled to first, second and third display screens;

[0081] **FIG. 84** is a block diagram illustrating one embodiment of electronic circuitry for coupling a computer on a patient assist apparatus or workstation to a dual monitor display mounted in a room;

[0082] **FIG. 85** is a block diagram illustrating another embodiment of the electronic circuitry for coupling the computer on the patient assist apparatus or workstation to the dual monitor display mounted in the room; and

[0083] **FIG. 86** is a block diagram illustrating a further embodiment of electronic circuitry for coupling the computer on the patient assist apparatus or workstation to the dual monitor display mounted in the room.

DETAILED DESCRIPTION OF THE DRAWINGS

[0084] Referring now to the drawings, **FIG. 1** illustrates a block diagram of a patient point of care computer system **10** of the present invention. Computer system **10** is designed to provide improved access to data at the point of care. Centralized computer system **10** organizes numerous monitors, treatment devices, and therapy devices and facilitates record keeping by providing a real time electronic chart for the patient. The computer system **10** of the present invention also improves communications between various caregivers who are members of a care team for the particular patient. The computer system **10** automates processes for ordering tests and communicating between various caregivers working with a patient.

[0085] Computer system **10** includes a computer **12** which is designed to stay with the patient during an entire stay at a hospital or other medical facility. Computer **12** is coupled to a memory **14** for storing and retrieving data. Computer **12** is also coupled to a display **16** which illustratively includes first and second displays **18** and **20** as discussed below in detail. Computer **12** is further coupled to at least one input device **22**. The input device **22** includes a pen or stylus based input, a keyboard, a mouse, a joystick, a voice recognition input, a touch screen, or other suitable input device. The input device **22** permits a caregiver or other individuals to input patient information or other desired information into the computer **12**.

[0086] Computer **12** is also coupled to a communication network **24**. Communication network **24** permits computer **12** to transmit and receive information from a remote location. Information related to the patient stored in memory **14** of computer **12** can be accessed by a doctor at a remote location. In addition, e-mail messages or other order messages can be transmitted over the communication network **24** to other locations both inside and outside the hospital. Therefore, a caregiver can schedule tests or request certain medications or procedures using the input device **22** of computer **12**. These orders or prescriptions are then automatically transmitted over the communication network **24** to the proper location. In addition, information such as test results can be sent over the communication network to computer **12** so that the caregiver can access all information related to the patient at the point of care.

[0087] As discussed below, the computer **12** may be coupled to monitors **26**, treatment devices **28**, and therapy devices **30** through a physiological monitoring module or coupler **32**. Illustratively, coupler **32** may be an RS-232 part or other suitable connector. Computer **12** processes signals from the monitors **26**, treatment devices **28**, and therapy devices **30** on a real time basis. This information is used to provide an electronic chart of patient conditions on display screens **18** and **20**. The monitors **26**, treatment devices **28**, and therapy devices **30** include, but are not limited to, heart rate monitors, temperature sensors, blood pressure monitors (invasive and noninvasive), EKG monitors, blood oxygen sensors, capnographs, ventilators, IV pumps, scales, chest drainage monitors, and the like.

[0088] Computer **12** is also coupled to a bar code reader **34**. Bar code reader **34** is either a standard bar code reader or a 2D bar code reader. The bar code reader **34** permits a caregiver to scan a bar code to indicate the type of drugs given to the patient in order to capture costs and the time that

the drugs are administered. Bar code reader **34** may be used on any other item given to the patient or on equipment in the room. An RFID receiver/reader **35** is also coupled to the computer **12** in another embodiment to read transmitted RFID signals.

[**0089**] Computer **12** is also coupled to a wireless data receiver **36**. Data receiver **36** is illustratively an IR or RF receiver. It is understood, however, that the wireless data receiver could be any type of receiver. Receiver **36** is configured to receive transmission signals from wireless transmitters **38**. Transmitters **38** are typically included in badges worn by personnel or on tags on equipment. As discussed below, the wireless data receiver **36** monitors the time and type of equipment and personnel within the vicinity of the point of care. Computer **12** is also coupled to a wireless data transmitter **40**. Transmitter **40** is configured to transmit signals to a receiving station within the hospital such as, for example, when computer **12** is disconnected from the communication network **24** during transport of a patient from one location to another.

[**0090**] Computer **12** is also coupled to a camera **42**. Video signals from camera **42** can be transmitted by computer **12** to a remote location using the communication network **24** or the wireless data transmitter **40**. An Internet protocol such as video over IP may be used if desired. Therefore, a doctor at a remote location can view an image of the patient. The video signal from camera **42** may also be taped using conventional magnetic tape storage devices.

[**0091**] In an illustrated embodiment, computer **12** is also connected to the phone **44**. Therefore, the caregiver or patient can use the phone **44** to place telephone calls in a conventional manner or using an Internet protocol such as voice over IP. In addition, messages or warnings can be transmitted by the computer **12** over phone **44**. For instance, if a caregiver receives an e-mail message on computer **12**, the message can also be transmitted to the caregiver via phone so that the caregiver can be paged or delivered a message by voice mail. Voice mail message or instructions received on the phone line can also be converted to e-mail message and transmitted to another location via communication network **24** or transmitter **40** or stored on computer **12** for access by a caregiver at computer **12**.

[**0092**] The computer system **10** provides access to information at the point of care from the lab, pharmacy, radiology, and other locations that may be inside or outside of the hospital but that generate information relevant to the care of the patient. An electronic record is stored in memory of a server **15** coupled to computer **12** by communication network or wireless connection for access by the computer **12** at the point of care. However, it is within the scope of the invention as presently perceived to instead or additionally store the electronic record in memory **14** of computer **12** for access at the point of care. Patient information data is integrated on to a chart which is displayed on the large display **16** including both display screens **18** and **20**. The computer system **12** integrates data manually input into the computer using input devices **22** with real time data available from monitors **26**, treatment devices **28**, therapy devices **30**, bar code reader **34**, and wireless data receiver **36**. As discussed below, the computer **12** remains with the patient during transport and at the other locations in the hospital such as, for example, for diagnostics, the operating room, and the like.

[**0093**] FIGS. **2-10** illustrate various embodiments of components of computer system **10** of the present invention. **FIGS. 2 and 3** illustrate display **16** which includes a first display screen **18** and a second, removable display screen **20**. Display screen **20** is on a removable module **50** which is removable from a support **52**, having a support plate **54** and a handle **56** coupled to the support plate **54**. It is understood that a single larger, elongated display may be used instead of separate display screens **18** and **20**. However, for cost reasons or other reasons, two displays **18** and **20** are used to provide the larger overall display **16**. It is also understood that more than two display screens may be coupled to support **52** if needed as discussed below.

[**0094**] In the illustrated embodiment, display screen **18** is fixed to the support **52**. Bar code reader **34** is storable within a recess **58** of support **52**. Bar code reader **34** is removed in the direction of arrow **60** for scanning items such as drugs or equipment supplied to the patient. Input device **62** is also coupled to the support **52**. Plate **54** illustratively includes a connector **64** which automatically provides connection between module **50** and the rest of the system when the module is loaded onto support **52** in the direction of arrow **66**. It is understood that various connecting cords may also be used to couple module **50** to the other components of computer system **10**. The connector **32** is configured to couple signals from monitors **26**, treatment devices **28**, and therapy devices **30**, to an inlet port on module **50** when connector **32** is installed in the direction of arrow **68** of **FIG. 2**. Wireless data transmitter **36** may also be coupled to module **52** by installing the transmitter **40** in the direction of arrow **70**.

[**0095**] The computer system **10** uses both display screens **18** and **20** to provide a flow sheet dimension in order to display the flow sheet for the patient in electronic form so that the paper chart does not have to be manually updated. As discussed below in detail, real time data from monitors **26**, treatment devices **28**, and therapy devices **30**, are used to continuously update the flow sheet with real time data. The caregiver can input information into the computer **12** using an input device such as the stylus or pen **72** shown in **FIG. 3**. Illustratively, display screens **18** and **20** include touch screen technology so that information can be input by simply touching portions of the screen. In addition, an input pad section **74** permits the caregiver to write with the pen **72** to input information. Computer **12** includes handwriting recognition software such as, for example, CalliGrapher 5.3 for Windows software available from ParaGraph, so that computer **12** recognizes the characters written on input pad **74**.

[**0096**] **FIGS. 4 and 5** illustrate another embodiment of the present invention. Those numbers referenced by numbers from FIGS. **1-3** perform the same or similar function. In **FIG. 4**, base support **52** includes a housing **76** formed to include an aperture **78** for receiving the pen **72** in the direction of arrow **80**.

[**0097**] A physiological monitoring module **82** is coupled to housing **76**. Module **82** includes a plurality of sockets **84** configured to receive connectors **86** coupled to the monitors **26**, treatment devices **28**, or therapy devices **30**, as illustrated by arrows **88**. **FIG. 5** illustrates the caregiver inputting information using the pen **72**. A handle **51** is coupled to module **50** to permit easy removal of the module **50** from the

remainder of support **52**. An arm assembly **53** is configured to couple the computer system **10** to a suitable support structure in the room, on the bed, or on a separate cart or stand, as discussed below in detail.

[**0098**] Another embodiment of the present invention is illustrated in FIGS. **6-8**. This embodiment shows a modular physiological monitoring interface **90** configured to be coupled to module **50**. Physiological monitoring interface **90** includes a separate housing **92** having a locking mechanism **94** configured to secure the interface **90** to a support plate **96** which is pivotably coupled to a support arm **98**. Physiological monitoring interface **90** further includes the connector **98** formed to include a plurality of sockets **100** for receiving connectors coupled to the monitors **26**, treatment devices **28**, and therapy devices **30**. The wireless data transmitter card **102** is also coupled to the interface housing **92**. Physiological monitoring interface **90** may include its own processor and memory for receiving the inputs from the various monitors **26**, treatment devices **28**, and therapy devices **30**. In another embodiment, interface **90** provides a physical connection between the monitors **26**, treatment devices **28**, and therapy devices **30**, with main computer **12** located in module **50**, but does not include any processor of its own.

[**0099**] **FIGS. 6 and 7** show module **50** which includes display screen **20** coupled to physiological monitoring interface **90**. A lock **104** is provided to secure module **50** to the interface **90**. In the illustrated embodiment, module **50** includes a connector **106** configured to mate with a connector on interface **90** to provide electrical connection between the computer **12** within module **50** and the interface **90**. In another embodiment, a separate cord may be used to provide the electrical connection between module **50** and interface **90**. In addition, when physiological monitoring is not needed, module **50** can be coupled directly to base plate **96**. Module **50** and interface **90** can be removed from base plate **96** as a unit as shown in **FIG. 7**. Therefore, the computer **12** along with monitoring capabilities may be coupled to the bed or a cart adjacent the bed as discussed below for transport with the patient to various locations within the hospital. If it is desired only to transport module **50** including the computer **12** without the physiological monitoring capability, module **50** is removed from interface **90** and coupled to the bed or cart for transport with the patient to the remote location.

[**0100**] **FIGS. 9 and 10** illustrate yet another embodiment of the present invention in which the phone **44** and video camera **42** are illustrated. The caregiver **110** shown in **FIG. 10** is able to see a video image **112** on display **16** through video camera **42** mounted on a computer housing **114** in a patient's room shown in **FIG. 9**. The caregiver **110** may also access chart information related to the patient at the remote location. **FIGS. 9 and 10** illustrate the phone **44** coupled to the housing **114** by line **116**. The patient can see the video image of the caregiver **110** location **118** in **FIG. 9**. **FIGS. 9 and 10** also illustrate buttons **120** for dialing the phone **44**.

[**0101**] As discussed above, the computer system **10** of the present invention is designed to have flexibility in order to follow a patient throughout the stay in the hospital. The computer system **10** is capable of being located within the room to collect data at the point of care. The computer **10** may also be moved out of the room to enter data, such as in a hallway. Therefore, the electronic chart or flow sheet generated by the computer and all associated data follows the patient throughout the stay at the hospital.

[**0102**] **FIG. 11** illustrates the computer system **10** in an emergency room of the hospital. The patient **122** is located on a stretcher **124** containing a patient support surface **126** carried on a base **128**, which is movable on casters **130**. Computer system **10** is mounted on a rail **132** of head wall **134** by mounting bracket **136**. Illustratively, bracket **136** may slide along rail **132** in the directions of double-headed arrow **138**. Computer system **10** is also pivotable on an arm **140** coupled to bracket **136** to adjust the position of the display **116** for viewing by caregivers **142, 144**. Physiological monitors such as heart rate monitors **146** and **148** are coupled to an inlet connector **32** of computer system **10** by lines **150**. Computer system **12** records output from the sensors on a real time basis and displays the outputs on display screen **18** or **20**. Screens **18** and **20** are reversed in the embodiment shown in **FIG. 11**. Computer **12** also stores the data from the monitors for charting purposes. Data from treatment devices **28**, such as IV pump **152** is also stored by computer **12**. Caregivers **142** and **144** can input information into computer **12** via any of the input devices **22**.

[**0103**] **FIG. 12** illustrates the computer system **10** in a neonatal intensive care unit (NICU). In **FIG. 12**, the computer system **10** is located near an incubator **160** which provides a thermal support device for an infant **162**. Computer **12** monitors vital signs of the infant **162**. Computer **12** is also illustratively coupled to the controller of the incubator **160** to monitor the conditions within the incubator **160**. Any treatments given to the infant can also be entered into computer system **12** manually using input devices **22**, bar code reader **34**, or a wireless data receiver **36**. In the **FIG. 12** embodiment, computer system **10** is mounted to a head wall **164** by bracket **166**. Arm **168** is pivotable relative to bracket **166**. If it is necessary to transfer the infant to another location, removable module **50** of computer system **10** is removed and attached to the incubator **160** for transport. Module **50** includes computer **12** and display **20**, as well as connector **32** for monitors **26**, treatment devices **28**, and therapy devices **30**. Therefore, computer **12** continues to capture real time data related to the infant **162** during transport. Wireless data transmitter **40** is used to communicate with base units within the hospital during transport.

[**0104**] **FIG. 13** illustrates the computer module **50** coupled to the wall in an examination room by bracket **170** and arm **172**. The examination room may be in the hospital, a doctor's office, or other health care facility. In **FIG. 13, a** patient **174** is seated on an examination table **176**. Examination table **176** illustratively includes a scale **178**, having an output coupled to computer module **50** so that the weight of the patient is automatically recorded by computer **12**. It is understood that the entire computer system **12** including the dual display **16** discussed above may be used within the examination room. However, for cost reduction purposes, a single display on module **50** may be adequate for the examination room. The temperature thermometer **180** and blood pressure cuff **182** are also coupled to the connector **32** coupled to module **50** by lines **184**. Therefore, computer **12** automatically captures the patient's temperature and blood pressure reading. The caregiver **186** inputs additional information using input device **22** which is illustratively a touch screen or pen based system. Patient symptoms may also be entered so that a doctor entering the room later can access

complete information regarding the patient **174**. This patient chart information is coupled to a communication network **24** so that the information can be transmitted to a remote location, such as a hospital, if information related to the patient is needed at a later time.

[**0105**] Another embodiment of the present invention is illustrated in **FIG. 14**. In this embodiment, the wireless data receiver **36** is used to receive data from badges **190** on caregivers **192**. Tags **194** are also located on the medical equipment within the room. The badges **190** and tags **194** transmit signals such as infrared signals or RF signals which are received by receiver **36**. The signals from badges **190** and tags **194** include identification information to identify the particular caregiver **192** or the particular type of equipment located in the room. Computer system **12** monitors the time that particular caregivers **192** and equipment are located within the room. The signals from tags **194** can include status information (such as in use or at rest). By knowing the location of equipment and the status of the equipment at all times, the computer can determine the amount of time that equipment is in use for each patient. Therefore, the hospital can determine the real cost of providing care to a patient **196**. In addition, computer **12** can generate an itemized bill indicating the time and duration that equipment is used in treating the patient and the time spent by the caregiver **12** within the room. This cost information can be either maintained for internal purposes or transmitted to a billing station for charging each patient for the exact amount of equipment and caregiver time used.

[**0106**] In the illustrated embodiment, computer system **10** identifies the caregiver **192** based upon signals transmitted from badge **190** to receiver **36**. Upon recognizing an authorized caregiver **192** entering the room, computer **12** automatically logs the user onto the system **10**. Any email or phone messages can be given to caregiver **192** via the display **16**. Caregiver **192** can also be alerted when results of tests ordered by the caregiver **192** are available.

[**0107**] **FIG. 15** illustrates another embodiment of the present invention in which the computer system **10** is coupled to a bed **200** by a coupling mechanism **202** which includes a pin **204** configured to be located within an IV socket **206** of bed **200**. Pin **204** extends away from hub **208**. Hub **208** includes a bracket **210** which is pivotally coupled to arm **212**. The opposite end of arm **212** is pivotally coupled to bracket **214** of computer system **10**. An IV pole **216** supports IV bags **218** and pumps **220**. By coupling the computer system **10** to bed **200**, computer system **10** is transportable with the bed **200** during transport as shown in **FIG. 17**. Therefore, computer **12** continues to capture data from the monitors **26**, treatment devices **28**, and any therapy devices **30** on a real time basis during transport of the patient within the hospital **10**. Wireless transmitter **40** and receiver **36** permit computer **12** to remain in contact with the base station in the hospital during transport.

[**0108**] **FIG. 18** illustrates another embodiment of the present invention in which the removable module **50** has been removed from support **52** and coupled to a cart **220**. Cart **220** includes a base **222**, a support **224** for holding a ventilator **226**, and pivotable IV poles **228** and **230**. Illustratively, cart **220** is a Careporter cart available from Hill-Rom, Inc. as disclosed in U.S. Pat. No. 5,966,760 and in U.S. application Ser. No. 09/105,255 which are incorporated herein by reference. Cart **220** includes a pivotable support arm **230** for receiving module **50**. Module **50** includes display **20**, connector **32**, wireless data transmitter **40**, along with computer **12**, memory **14**, and input device **22**.

[**0109**] **FIG. 19** illustrates a junction box **240** having a wireless transmitter such as an RF transmitter **242**. The junction box **240** includes a plurality of inlet connectors **244** configured to be coupled to physiological monitors, IV pumps, or other devices **246** that do not have individual transmitters. For example, junction box **240** may be used in a critical care unit with all the devices **246** coupled to inlet connectors **244**. Therefore, the hospital does not have to undergo the expense of placing a transmitter on each device **246**. Transmitter **242** transmits data from the devices **246** to the wireless data receiver **36** of computer system **10** located on the bed or a cart adjacent the bed.

[**0110**] Junction box **240** includes an internal memory **248** for storing a selected amount of data from the devices **246**. Power cord **250** for junction box **240** is designed to be plugged into a suitable power outlet.

[**0111**] Junction box **240** also includes a wireless receiver **252** for receiving data from the wireless data transmitter **40** of computer system **10**. Junction box **240** also illustratively includes a processor **240** which is programmed to recognize devices **246** coupled to the junction box **240**. Junction box **240** communicates with computer **12**, transmitter **242** and receiver **252**. Processor **254** determines whether the computer system **10** is within range for transmission of data by determining whether signals from the computer system **10** are detected by receiver **252**. If the computer **10** is within range for receiving data transmission from the junction box **240**, data from devices **240** is transmitted by transmitter **242** from data receiver **36** where computer **12** stores the data in memory **14**. If computer system **10** is not within range to receive data, processor **54** stores data from the devices **246** in memory **248** of junction box **240**. When processor again determines that computer system **10** is within transmission range, processor transmits the stored data from devices **246** to the wireless data receiver **36** of computer system **10**. Therefore, information for charting purposes is supplied to computer system **10** without requiring transmitters on each of the devices **246**.

[**0112**] FIGS. **20-24** illustrate various uses for a patient assist apparatus **260**. Patient assist apparatus **260** includes a base **262** having casters **264**. A support portion **266** is coupled to base **264**. Air or oxygen tanks **268** are coupled to support portion **266**. IV poles **270** are also coupled to patient assist **260**. A handle **272** is coupled to an upper end of support **266**. A computer support **274** is also coupled to the upper end of support **266**. Computer support **274** is configured to receive computer module **50** which is illustratively removed from the total computer system **10** as discussed above. Module **50** includes a single display **20**, a computer **12**, memory **14**, wireless data receiver **36**, wireless data transmitter **40**, and coupler **32** for connecting the computer **12** to monitors **26**, treatment devices **28**, and therapy devices **30**. Therefore, vital signs of the patient **276** as well as outputs from various devices such as IV pumps **278** are captured real time by computer **12**. Display **20** also displays the patient's vital signs. Patient data is transmitted via the wireless data transmitter **40** to a communication network **24** or stored in local memory. In **FIG. 20**, the patient assist **260**

is used as a walker-type device to assist with patient egress after medical procedures such as surgery. The patient assist **260** helps the patient **276** maintain his balance and keeps the computer **12** at the point of care.

[**0113**] **FIG. 21** illustrates the patient assist **260** and computer module **50** for use as an IV pole within the room. Caregiver **280** inputs information related to the patient **276** using pen **72** as discussed above. **FIG. 22** illustrates the patient assist **260** coupled to a wheelchair **282**. Caregiver **280** uses handle **272** to push the wheelchair **282**. A coupling mechanism is used to secure the patient assist **260** to the wheelchair **282**. Again, computer module **50** is able to monitor and record data from monitors **26**, treatment devices **28** and therapy devices **30** during transport of the patient. In addition, all the patient's information and chart are available on display **20** during transport. **FIG. 23** illustrates removable module **50** from support **52** within the room as illustrated by arrow **284**. Module **50** is then loaded on to patient assist **260** as illustrated by arrow **286** for transport of the patient on the bed **290**. Caregiver **280** is able to view the patient's chart and vital signs during transport on display **20**. Patient assist **260** is coupled to bed **290** by a suitable latching mechanism. **FIG. 24** illustrates that the patient assist **260** may be uncoupled from bed **290** at the testing facility such as the CT scanner **292**. Patient **276** is removed from bed **290** and placed on table **294**. Patient assist **260** is uncoupled from bed **290** and left beside the patient **272** when the bed **290** is removed from the room. Therefore, computer **12** located within module **50** continues to capture patient data and data from the monitors and treatment devices while the patient **270** is at the testing facility. All previous test results and chart information are available to the caregiver at the test facility. In addition, the chart remains complete on a real time basis. In certain instances, test results can be automatically transmitted to computer **12**. In other instances, test results are obtained later and transmitter to the computer **12** via the communication network **24**. Since all test results and lab results are available at the point of care, the present invention reduces the likelihood of duplicate testing on the patient **272**.

[**0114**] In the embodiment of FIGS. **20-24**, data related to the patient is transmitted by wireless data transmitter to a central nurse station or to the main server for transmission to any location. Therefore, patient's vital signs or other information can be displayed or monitored at the central station.

[**0115**] When in the room, the computer system **10** is also used as a tool to educate the patient. Information related to the patient's particular diagnosis or condition is provided to the patient so that the patient understands the care plan for treating the patient's condition. Computer **12** is also used to assist compliance with a doctor's instructions after release. For instance, informative information can be provided on display **16** with instructions for the patient after release. Display **16** can also be used as a TV set when the caregiver is not in the room.

[**0116**] FIGS. **25-27** illustrate a workstation **300** located in a hospital room adjacent the bed **302**. It is understood that the workstation **300** can be used in the hallway or at another location outside the hospital room. Computer system **10** is shown on an opposite side of the bed **302** from workstation **300**. It is understood that workstation **300** may also be on the same side of the bed as computer system **10**. Illustratively, workstation **300** includes an upper cabinet **304**, a light **306**, a keyboard **308**, and a support **310**. Computer system **10** is movable from the support arm **312** to support **310** on workstation **300**. Data is entered into computer system **10** using pen **72** or other input device including the keyboard **308**. Computer system **10** continues to monitor and record data from monitors **26**, treatment devices **28** and therapy devices **30** when on workstation **300**. An additional cabinet **312** is located below keyboard **308**. It is understood that cabinet **312** may be formed integrally with the rest of workstation **300** or may be a separate piece as shown in **FIG. 26** which is movable in the direction of arrow **314**. As shown in **FIG. 27, a** curtain **316** is illustratively provided adjacent workstation **300** to permit the caregiver **318** to enter information into the computer system **10** in privacy. Keyboard **308** is retractable into a central storage section **320** as illustrated in **FIG. 26**. **FIGS. 29 and 30** illustrate another embodiment of a workstation **322** as shown in **FIGS. 28 and 29**. Workstation **322** includes a central open region **324**, an upper storage cabinet **326**, and a shelf **328**. Computer system **10** mounted on a support arm **330** and is pivotable from a position located adjacent bed **332** at the patient's point of care to a position shown, for example, in **FIG. 29** in which the computer **10** is pivoted within space **324** for access by a caregiver at workstation **322**. A separate keyboard **332** is provided on workstation **322** for inputting additional information into the computer system **10**. A movable cabinet **334** is located beneath the shelf **328**. It is understood that the entire workstation **322** may be on a mobile cart so that the workstation **322** is movable as a unit within the room.

[**0117**] FIGS. **30-33** illustrate additional carts for supporting the computer system **10**. In **FIG. 30**, cart **340** includes a base **342** and a central portion **344** coupled to the base **342**. The central portion **344** includes drawers **346**. A stand **348** is located on top surface **350** for supporting the computer system **10**. A screen or partition **352** is coupled to central portion **344** and extends 180° or more around top surface **350** for privacy. Caregiver **354** can rotate the stand **340** as illustrated by double headed arrow **356** away from the patient **358** as desired for privacy when inputting information into the computer system **10**.

[**0118**] Another cart **360** is illustrated in **FIG. 31**. Cart **360** includes a base **362** having casters **364**. A central pedestal **366** includes telescoping portions **368** and **370**. A wire storage tray **372** is coupled to telescoping section **368**. Controls **374** and **376** are provided for raising and lowering telescoping sections **368** and **370**. Work surface **378** includes handles **380** and **382**. Either module **50** of computer system **10** or the entire computer system **10** is configured to be coupled to a support **382**. Pullout keyboard **384** is located under work surface **378**. Surface **378** may include an input device such as device **74** in **FIG. 2** which permits the caregiver to write out information to be input into the computer **12** which is recognized by handwriting recognition software.

[**0119**] Yet another cart **390** is illustrated in **FIGS. 32 and 33**. Cart **390** includes a central portion **392** having drawers **394**. Legs **396** and casters **398** are coupled to central portion **392**. Stand **390** includes an angled top work surface **400** and a keyboard **402** which can be moved to an extended position in the direction of arrow **404** in **FIG. 33** for access by a caregiver **406**. Computer **10** is coupled to a telescoping

support arm **408** by a pivot connection **410**. Arm **408** can extend and retract in the direction of double-headed arrow **412** in **FIG. 33** to raise and lower the height of computer **10**. Computer **10** is also pivotable about axis **412** as illustrated by double-headed arrow **414** in **FIG. 33**.

[**0120**] **FIG. 34** illustrates a summary of the real time electronic charting feature of the present invention. As discussed above, dual displays **18** and **20** permit replication of a chart approximately the size of a conventional flow sheet used to keep patient records in the hospital. The dual displays **18** and **20** also permit viewing of two separate software application simultaneously. It is understood that a single display may be used. However, dual displays are used for cost saving purposes in order to provide the chart information. In other words, a portion of the chart data is displayed on the first display screen **18** and another portion of the patient data chart is displayed on the second display screen **20**. Computer **12** inputs information in a real time basis on the chart from monitors **26**, treatment devices **28** and therapy devices **30**. In other words, the computer **12** monitors these devices to provide real time information which normally is kept on patient's charts or flow sheets. For example, computer **12** automatically charts information related to temperature, respirations, rhythm, heart rate, blood pressure, blood oxygen levels, or any other vital sign which is desirable to monitor. The computer **12** graphs this information on a continuous, real time basis on the chart.

[**0121**] Computer **12** also monitors the bed status as illustrated at block **420**. Bed status **420** includes information related to the location of various bed deck sections or other information related to the mechanical features of the bed. Computer **12** also monitors bed based therapy devices as illustrated at block **422**. These therapy devices include, for example, thermal treatment devices, percussion, vibration, or rotation therapy provided for the patient. Computer **12** monitors the actual time and duration that such therapies are performed. Computer **12** indicates these therapies on the chart so that the results of these therapies can be monitored for effectiveness by viewing the time that the therapy is performed and then determining whether the patient's condition improves based on the therapy. Computer **12** also monitors medications administered using the bar code reader **34**, RFID reader, or other input device as indicated by block **424**. Again, by charting these medications on a real time basis, the caregiver can determine the effectiveness of medications by monitoring the other vital signs in relation to the time that medications are administered. Test results are also monitored by computer **12** as illustrated at block **426**. These test results are charted, if appropriate, to assist with analysis of the effectiveness of the various treatments. As discussed above the charting from the monitors continues regardless of whether or not the patient is in the room. The modular interface card is provided for connecting the monitors, treatment devices, and therapy devices to the computer system **10**. An open system permits devices from various manufacturers to be coupled to the system **10**. Therefore, vital signs are archived and automatically downloaded to the flow chart regardless of whether or not the patient is in the room. This provides a more complete chart when compared to conventional paper charts.

[**0122**] Computer **12** may also be coupled to a smart mattress such as disclosed in PCT Application No. PCT/US99/25311 which is incorporated herein by reference. The smart mattress generates output signals related to a patient's weight, heart rate, respirations, temperature, EKG, ECG, SaO_2, and the like which are monitored and charted by the computer **12**.

[**0123**] Another embodiment of the present invention is illustrated in **FIG. 35**. The embodiment of **FIG. 35** provides a fully integrated care delivery system **500**. The system **500** provides open architecture which allows medical equipment manufacturers to produce module products to function with the system **500**. These medical device manufacturers access common hardware and redundant systems so that the modular devices are smaller and lighter. The smaller and lighter modular devices facilitate ergonomic benefit and their placement within the environment. The entire system **500** also has cost advantages by reducing these redundant systems. System **500** includes a central station having a central processing unit (CPU) **504**, a power supply **506**, a battery backup **508**, a display **510**, and a graphical user interface **512**. User interface **512** may include any type of input device discussed above. Medical device modules **514** configured to be coupled to a plurality of input connectors **516** of station **502**. Illustratively, the medical devices of modules **514** are vital sign monitors, IV pumps, ventilators, defibulators, compression boots, and other medical devices that may be used to provide or monitor the care of a patient. Modules **514** illustratively do not include a CPU, a power supply, a display, or a user interface. When modules **514** are connected to connector **516**, modules **514** include a suitable connector **518** so that modules **514** use the CPU **504**, power supply **506**, battery backup **508**, display **510**, and user interface **512** of the central station **502**.

[**0124**] Central station **502** provides an open architecture to allow all medical equipment manufacturers to produce modules **514** to function with the system **500**. System **500** includes other components (not shown) such as the connection to the communication network **24**, the bar code reader **34**, wireless data receiver **36**, wireless data transmitter **40**, camera **42**, and phone **44** as discussed above with reference to **FIG. 1**. CPU **504** also accesses memory **518**. Modules **514** are less expensive since redundant systems are not used. Only the actual treatment portions of the devices are required in the modules **514**. Control of the modules **514** is provided using the graphic user interface **512** of station **502**. Information regarding operation of the module **514** is displayed on display **510** instead of on a separate display on the module **514**. Power is supplied to the module **514** via the power supply **506** if the station **502** is connected to a wall outlet or via a backup battery **508** if the station **502** is disconnected from the wall outlet such as, for example, during transport. Once the modules **514** are connected, the system **500** operates as discussed above to capture data for charting patient information throughout the patient's entire stay at the hospital.

[**0125**] FIGS. **36-38** illustrate an embodiment of the invention shown in **FIG. 35**. This embodiment, a cart **520** includes a base **522** supported by casters **524** and a central portion **526** for housing a ventilator **528** and defibulator **530**. A handle **532** is provided for pushing the cart **520**. A first support arm **534** is coupled to hub **536**. A module receiving section **540** includes a plurality of module receiving cavities **542** for receiving modules **544**. Computer system **500** is coupled to a second arm **546** attached to hub **536**. Display **510** includes dual screens. Medical device module such as

modules **544**, as well as ventilator **528** and defibulator **530** are similar to modules **514** illustrated in **FIG. 35**. In other words, these modules use the CPU **504**, power supply **506**, backup battery **508**, display **510**, and user interface **512** of the computer system **500**. **FIG. 36** illustrates the cart **520** being pushed toward bed **548** in the direction of arrow **550**. A large display **552** is coupled to a wall adjacent bed **548**. Display **552** is also coupled to computer system **500** via the communication network or a wireless transmitter to display information related to the patient on the display screen **552**. When caregiver **554** is not in the room, another image such as a picture or TV image may be provided on display screen **552**. **FIG. 37** illustrates the cart **520** at a location adjacent the head end of bed **548** for providing access to computer **500** at the point of care near the head end of the patient **556**. **FIG. 38** illustrates the cart **520** docked to the bed **548** during transport. **FIG. 38** also illustrates one of the modules **544** removed from module receiving cavity **542**. In addition, **FIG. 38** illustrates how ventilator **528** is connected to cart **520**.

[**0126**] **FIGS. 39 and 40** illustrate another embodiment of the present invention. In **FIG. 39, a** computer **600** is integrated with an overbed table **602**. Table **602** includes a base **604** supported by casters **606**. Table **602** further includes a side support **608** having storage portions **610** and a top cavity **612**. A connector **614** is coupled to a computer support **616**. Illustratively, support **614** is rotatable about axis **618** as shown by arrows **620**. Computer system **600** includes a personal computer including a display **622**. A phone **624** is integrated with the computer **600**. It is understood that the phone could be separate from the computer **600**. **FIG. 40** illustrates the overbed table positioned over a hospital bed **626** so that the computer **600** is accessible to patient **628**. Therefore, the patient **628** has access to e-mail, the Internet, a care plan, or other items such as computer games. The patient **526** can conduct business or send e-mails to the doctor to ask questions.

[**0127**] Another embodiment of the present invention is illustrated in **FIG. 41**. In the **FIG. 41** embodiment, a display apparatus **630** is used in place of display apparatus **16** shown in **FIG. 1**. Display apparatus **630** includes first and second display screens **632** and **634** coupled to a base or support **636**. Illustratively, display **634** is removable from base **636** as a separate module along with computer **12**. A connector **638** illustratively includes male and female portions for connecting the computer **12** to the first display **632** when the computer **12** and second display **634** are coupled to the base **636**. First display **632** includes a height dimension **640** and a width dimension **642**. Second display **634** includes a height dimension **644** and a width dimension **646**. As illustrated in **FIG. 41**, the height and width dimensions **640** and **642** of first display **632** are larger than the height and width dimensions **644** and **646** of second display **634**. Therefore, the removable display **634** is smaller than the stationary display **632**. A top edge **648** of first display **632** is illustratively aligned with a top edge **650** of second display **634** on support **636**. In the illustrated embodiment, chart information or other patient information is provided on both displays **632** and **634**. Illustratively, the charting data is only provided in a top portion of display **632** as illustrated by dimension **652**. Dimension **652** is the same height as height dimension **644** of second display **634**. A lower portion of first display **632** illustrated by dimension **654** is illustratively used for providing menu items or icons. Section **654** of screen **632** may also be used as a pen or stylus based input section which provides handwriting recognition as discussed above. It is understood that additional display screens may be coupled to base **636**, if desired.

[**0128**] When it is desired to transport the patient or permit the patient to move about in the hospital, the computer **12** and display **634** are removed from base **636** and coupled to the bed, patient assist, stand or other device as discussed above so that the computer **12** and display **634** remain with the patient at the point of care as the patient moves throughout the hospital. The other components of computer system **10** permit real time monitoring and data entry as discussed above.

[**0129**] **FIG. 42** illustrates another embodiment of a physiological monitor signal junction box and transmitter of the present invention. In the illustrated embodiment, monitoring module **660** includes a housing **662** which is coupled to the patient **664** by strap **666**. It is understood that the housing **662** may be coupled to other portions of the patient **664** by any suitable structure. In addition, the module **660** may be coupled to the patient support device **668** such as a bed or stretcher. A module **660** may be also be coupled to a patient assist device, stand, or workstation as discussed above. Various physiological monitors such as heart rate monitors, temperature sensors, blood pressure cuffs, blood oxygen monitors, EKG monitors, and the like are coupled to the monitor by connector lines **670**. Module **660** transmits signals from the physiological monitors via antenna **672** or other suitable wireless transmitter to the computer **12** or to a server **15** which receives the transmitted signals using a wireless receiver.

[**0130**] Illustratively, module **660** is similar to elements **32** in **FIGS. 2 and 82** in **FIG. 4**. Module **660** may include a separate battery that can be recharged when coupled to a computer module **50** or a wall outlet.

[**0131**] Yet another embodiment of the present invention is illustrated in **FIG. 43**. In this embodiment a computer module **680** is configured to be coupled to the patient support apparatus **668** to a patient assist **260** or other device as discussed above. Numerous coupling mechanisms described herein may be used to connect the computer module **680** to the bed or patient support **668**, to the patient assist **260**, or to one of the carts or workstations. In the **FIG. 43** embodiment, computer module **680** includes the computer **12** and the components shown in **FIG. 1** except for display **16**. Computer module **680** includes a third display **682** in addition to display screens **18** and **20**. In this embodiment, display screens **18** and **20** remain mounted to a wall **684** in a room by a mounting arm **686** or other support structure as shown in **FIG. 43**. Patient information and inputs are received on display screens **18** and **20** as discussed above. When in the room, computer **12** within module **680** is coupled to display screens **18** and **20** via a physical wired connection or via a wireless connection so that patient information is displayed on screens **18** and **20**. However, when transported out of the room, display screen **682** is used.

[**0132**] Module **680** includes input connectors **688** coupled to physiological monitors **26**, treatment devices **28**, and therapy devices **30** by connecting lines **690** as discussed above. A wireless data transmitter **40** is provided to transmit signals from the monitors **26**, treatment devices **28**, and

therapy devices **30** to the main server **15** when computer **12** is disconnected from the communication network **24**. Therefore, computer **12** uses the larger display **16** which either includes an elongated single display, or side-by-side display screens **18** and **20** when the computer module **680** is in the room. It is understood that the larger displays **16** may be located in different rooms throughout the hospital so that the computer module **680** can use the displays within each room for displaying patient information. Therefore, the large display **16** does not need to be transported with the patient through the hospital.

[**0133**] While the illustrated embodiments provide a computer at the point of care, including a computer which is designed to stay with the patient, another embodiment of the present invention includes a central computer, server or other processor configured to communicate through a wired or wireless connection to modules attached to the patient, a patient support such as a bed, table, stretcher, incubator, or the like. In other words, while computer **12** stays with each patient wherever he or she goes in the illustrated embodiments, it is understood that a single central computer or server in a room such as a neo-natal center may be used for many patients or infants with separate input devices and displays associated with each patient or infant.

[**0134**] Another embodiment of the present invention is illustrated in **FIG. 44**. **FIG. 44** is illustrative display screen for displaying information related to patient vital signs such as heart rate, respiratory rate, fluid/electrolytes/nutrition, temperature, and neurological monitoring. Various sections of the star shown in **FIG. 44** can be adjusted in color, size, or other manners to provide a visual indication to the caregiver of alarms or warnings in connection with one of the monitored vital signs. In addition to the visual indicator, displays of actual values of each of the measured parameters may be displayed on the display screen. As discussed above, these monitored items can be stored in the memory of the computer or transmitted to a main server at a remote location. The signals are then charted on a time basis. Treatments are also either manually or automatically recorded on a time basis so that a caregiver can assess the effectiveness of various treatments, request additional treatments or lab work, or intervene to take corrective actions. Showing that a particular treatment or therapy was effective to improve a patient condition or to prevent a subsequent condition from occurring may improve the ability to charge and collect for the treatment or be reimbursed for the treatments or therapies performed on the patient.

[**0135**] The present invention comprises one or more of the following features or combinations thereof.

[**0136**] 1. A computer system or a component thereof assigned to a patient or to a bed or other device upon which the patient rests or with which the patient is associated, the system comprising a computer, a plurality of devices for sensing various physical conditions and characteristics of the patient, each device having an output coupled to the computer, and a display arranged to present the condition and status of the patient.

[**0137**] 2. Such a system comprising a plurality of input devices for inputting data and instructions concerning the patient.

[**0138**] 3. Such a system configured to store and retrieve data concerning the patient and the sensing devices and to display such data over a period of time to show relationships on a time basis.

[**0139**] 4. Such a system comprising a memory in which the patient's history is stored for retrieval and display.

[**0140**] 5. Such a system in which the sensing devices include heart rate sensors, respiratory rate sensors, neurological monitoring sensors, temperature sensors and the like.

[**0141**] 6. Such a system comprising means for inputting fluid, electrolyte and nutrition data into the memory on a time basis.

[**0142**] 7. Such a system comprising a communication network providing for remote monitoring of patient data and remote inputting of data and instructions.

[**0143**] 8. Such a system further comprising a video imaging input to the computer to provide images of the patient.

[**0144**] 9. Such a system further comprising ultrasound image input to the computer.

[**0145**] 10. Such a system further comprising an x-ray image input to the computer.

[**0146**] 11. Such a system in which the patient status and condition is stored and used for a time-based presentation on the display.

[**0147**] **FIGS. 45 and 46** illustrate a portable or movable workstation **710** having a base **712**, a top vertical support member **714**, a bottom vertical support member **715**, and an upper support **716** coupled to top vertical support **714**. A plurality of storage containers **718** are also coupled to the top vertical support **714** below upper support **716**. Upper support **716** includes a base frame **720** coupled to top vertical support **714**. A keyboard **722** is movably and coupled to base frame **720** by tracks **724** so that keyboard **722** is movable from a retracted position shown in **FIG. 45** to an extended position shown in **FIG. 46**. A release mechanism **726** for keyboard **722** is illustrated in **FIG. 45**.

[**0148**] A top surface **728** is movably coupled to base frame **720** by tracks **730**. Top surface **728** is movable from a retracted position shown in **FIG. 45** to an extended position relative to base frame **720** as shown in **FIG. 46**. Therefore, after the work station **710** is rolled into a room, the caregiver can extend the keyboard **722** and top surface **728** to provide a workstation for entering or reviewing patient data. The height of center vertical support **714**, **715** is adjustable so that the caregiver can input data on the keyboard **722** in either a standing position as shown in **FIG. 45** or seated position as shown in **FIG. 46**.

[**0149**] The patient computer system **732** is illustratively coupled to top surface **728**. As discussed above, computer system **732** includes first and second displays **734** and **736** for displaying flow sheets or other information relating to the patient. Physiological monitors such as, for example, blood pressure cuffs and temperature probes are integrated into the computer system **732**. The monitors may also be separate devices.

[**0150**] **FIGS. 47A, 47B** and **48** illustrate details of illustrative types of information displayed on display **734** and **736**. Illustratively, information in **FIG. 47A** is displayed on

screen **734** and information in **FIG. 47B** is displayed on screen **736**. Region **740** of **FIG. 47B** facilitates data entry of a head-to-toe physical assessment of the patient by selecting various regions on the patient icon. The caregiver may display or input different types of information related to the patient using the icon and entry keys. The "roll-in" workstation **710** moved with the patient to provide a dedicated computer at the point of care of the patient.

[**0151**] Another embodiment of the present invention is illustrated in FIGS. **49-54**. The patient assist cart **740** includes base **742** housing side supports **744** and **746** and elongated plates **748** and **750** coupled to the side supports **744** and **746**, respectively. **752** are coupled to one end of plates **748** and **750**. Casters **752** includes self contained foot actuated locks. Locking **754** are coupled to the opposite end of plates **748** and **750**. As described below casters **754** include a central brake mechanism.

[**0152**] The plates **748** and **750** extend past ends of side supports **744** and **746**, respectively, to provide flexible leaf springs for coupling to the casters **752** and **754**. In other words, the plates **748** and **750** may flex slightly during movement of the cart **740** over uneven surfaces. The patient assist cart **740** includes extending support tubes **756** and **758** coupled to a central portion **745** of base **742**. Patient assist cart **740** further includes castor brakes mechanisms **760**, a foldable seat **762**, and movable handles **764** as discussed in detail below. A tank support bracket **766** is mounted to central portion **745** of base **742** for supporting an oxygen or air tank **768**. A plurality of IV poles **770** are coupled to support tubes **756** and **758**. A computer **772** including a plurality of vital signs monitor input ports is coupled to a central mounting portion **774** of cart **740**. Illustratively, the mounting portion **774** extends between support tubes **756** and **758**. Computer **772** is rotatable on cart **740** about an axis **776**.

[**0153**] **FIG. 50** illustrates a central aperture **778** formed in mounting portion **774**. In the illustrated embodiments, batteries **780** are located inside side supports **744** and **746** to provide power to devices on the cart **740**. An isolation transformer **782** and a battery charger **784** are also located within compartments in the base **742** as shown in **FIG. 50**. Cart **740** may be coupled to a wall outlet in a room when available by a plug (not shown). Batteries **780** are coupled to an electrical connector **786** aligned with aperture **778** to couple the computer **772** electrically to the patient assist cart **740**. Computer **772** includes a male connector **788** configured to mate with female connector **786** on cart **740**. Illustratively, power connector **788** provides **24** VDC power supply to the computer **772**. A transceiver **790** is coupled to computer **772**. Illustratively, the transceiver **790** sends and receives an IR or RF signal to communicate with devices or a network as discussed above. A connector **792** is provided for powering a dual display discussed above. Computer **772** includes a display screen **794**. In addition, computer **772** includes a plurality of input connectors **796** for coupling monitors such as temperature monitors, blood pressure monitors, SPO2 monitors, ECG monitors, or other monitors to the computer **772** as discussed above. Physiological monitors or other devices are coupled to computer **772** as discussed above or by wires or by a wireless connection to the computer **772** or to an interface connector so that the patient's vital signs are other characteristics continue to be monitored on real time basis when the patient is away from the hospital bed or patient room.

[**0154**] Patient assist apparatus **740** preserves floor space in the hospital room, is located at an ergonomic position and manages all the devices in one location. The computer **772** follows the patient to permit automatic data capture and the ability to access or enter patient data regardless of the patient location. Patient assist **740** provides a patient egress device, a transport device, and an in-room assist device. In another embodiment of the present invention a commode (not shown) is coupled to base **742**. This eliminates the need for a separate bedside commode within the room.

[**0155**] **FIGS. 53 and 54** illustrate the patient assist cart **740** with another embodiment of computer **800** coupled to the support posts **756** and **758**. In this embodiment, the display screen **802** is mounted to a first movable arm **804**. Movable arm **804** is coupled to a pivotable arm **806** which is coupled to support tube **758**. The embodiment of **FIGS. 53 and 54** provides greater visibility for a patient using the patient assist cart **740** as a walker or for a caregiver when using the patient assist cart **740** to push a hospital bed as shown in **FIG. 69** below.

[**0156**] The computer **800** is illustrated in more detail in **FIGS. 55 and 56**. The computer **800** includes a housing **808** having end portions **810** and **812** configured to be coupled to support tubes **756** and **758**, respectively. In embodiment, the computer **800** is not easily removable from cart **740**. Computer **800** includes a plurality of inputs **814** for vital signs monitors as discussed above. Illustratively, the vitals monitor is available from Nasiff Associates, Inc. located in Brewerton, N.Y. It is understood that other types of suitable monitoring modules may be used with computer **800**. A plurality of RS 232 ports **816** are configured to receive connectors **818**. Computer **800** also includes a USB ports **820** and a printer/mouse port **822**. Computer **800** further includes a plurality of AC power receptacles **824**, a speaker **826**, a hard drive **828**, and power converters **830** as shown in **FIG. 56**. In addition, computer **800** may include at least one PCMCIA card slot, a radio LAN device, and wireless Internet device. Computer **800** is coupled to display screen **802** includes a housing **832** mounted to arm **804** as discussed below.

[**0157**] **FIGS. 57 and 58** illustrate another embodiment of the present invention in which a display **834** and input device **836** are coupled to the support arm **804** and to computer **800**. In addition, **FIGS. 57 and 58** show IV pumps **838** and IV bags **840** coupled to IV poles **770**. A chest drainage apparatus **842** is also coupled to support tube **758**.

[**0158**] **FIG. 58** illustrates the arm **804** in a downwardly pivoted position and the display **834** pivoted relative to the arm **804** to facilitate use in the lower position. Arm **804** is rotatably coupled to arm **806** of cart **740** by pivot connection **844** so that the arm **804** rotates about axis **846**. Arm **806** also rotatable about an axis extending through support tube **758**. Therefore, the display **834** and input device **836** are positionable in a plurality of different orientations to facilitate use of the input device **836** and the display screen **834**.

[**0159**] Further details of the seat **762** for supporting a patient are illustrated in **FIGS. 59 and 60**. The seat is movable from an upwardly pivoted support position shown in **FIG. 53** to a downwardly pivoted storage position shown

in **FIG. 54**. As shown in **FIGS. 59 and 60**, a mounting member **850** includes apertures **852** and **854** configured to receive support tubes **758** and **756** of cart **740** as shown, for example, in **FIG. 49**. Mounting member **850** is pivotably coupled to a planar seat **856** by pivot connections **858**. Therefore, the seat **858** pivots relative to the mounting member **850** between the upwardly pivoted position shown in **FIG. 53** to the downwardly pivoted position shown in **FIG. 54**. A seat support **860** is coupled to seat **856** by spaced apart couplers **862**. End portions **864** of support **860** extend into the couplers **862** so that support **860** is pivotable about axis **866** relative to seat **856**. Couplers include notched sections **868** configured to receive opposite side portions **870** support **860** to hold the support **860** in the position shown in **FIG. 60**. Couplers **862** include a ramp surface **872** to facilitate movement of the support **860** from the position shown in **FIG. 60** to the position shown in **FIGS. 54 and 59**. Side portions **870** move outwardly as shown in **FIG. 59** as the support is pivoted in the direction of arrow **882**. Support **860** is shaped to provide spaced apart support legs **874** and **876** which are configured to engage plates **748** and **750** as shown in **FIG. 53** to support the seat **856**.

[**0160**] When it is desired to use the seat **762**, an operator pivots the seat **856** upwardly about mounting member **850** in the direction of arrow **878** in **FIG. 54**. As the seat **856** is lifted, support **860** pivots downwardly about axis **866** in the direction of arrow **880** in **FIG. 59** until the side portions **870** enter notches **868** formed in couplers **862** to hold the support **860** in the position shown in **FIG. 60**. Therefore, the support **860** automatically pivots downwardly and is maintained in the support position by couplers **860** when the seat **856** is pivoted upwardly.

[**0161**] When it is desired to move the seat **862** to a storage position, the user first pivots the support **860** about axis **866** in the direction of arrow **882** shown in **FIGS. 53 and 60**. Support **860** pivots to be generally co-planar with seat **856** as shown in **FIG. 54**. Seat **856** holds the support **860** in the position shown in **FIG. 54** for storage.

[**0162**] **FIGS. 53 and 54** also illustrate the handle assembly **764**. When in the orientation shown in **FIG. 53, a** patient may use the handles **884** and **886** for support or like a walker. A center bar **887** extends between handles **884** and **886**. Handle assembly **764** is coupled to cart **740** by coupling mechanisms **890** best shown in **FIGS. 61, 63** and **64**. Handles **884** and **886** are pivotable by an axis **891** in the direction of arrow **888** in **FIG. 53** to lie on an opposite side of support tubes **56** and **58** as shown in **FIG. 54**. In the **FIG. 54** orientation, the handles **884** and **886** are usable by a caregiver to push a bed, wheelchair or other device attached to the patient assist cart **740**.

[**0163**] As shown in **FIGS. 61 and 62**, the center rod **887** includes a cylindrical body portion having a flat sections **892** adjacent opposite ends. End couplers **894** are coupled to bar **887**. Each coupler **894** includes an aperture **896** configured to receive an end of a handle **884**, **886**. A stop **898** is located on each coupler **894**. As best shown in **FIGS. 63 and 64**, mounting mechanisms **890** include an aperture **900** formed to receive support tubes **756** or **758**. When the handles **884** and **886** are pivoted upwardly as shown in **FIG. 63**, the flat sections **892** on center bar **887** are aligned with an opening **902** formed in coupling mechanism **890**. A Belville washer **904** and a friction member **906** are located within the opening **902**. An inner surface of friction member **906** illustratively has a cylindrical shape to engage an outer surface support tube **756** or **758**. When the flat section **892** is aligned with opening **902** as shown in **FIG. 63**, the mounting mechanisms **890** can slide up and down on support tubes **756** and **758** in the direction of double headed arrows **908** in **FIG. 53**. **FIG. 54** shows the handle assembly **764** moved downwardly. Handles **884** and **896** provide arm rests for the seat **856** in this orientation.

[**0164**] When the handles **884** and **886** are pivoted downwardly in the direction of arrow **910** in **FIG. 64**, center bar **887** rotates in the direction of arrow **912** which causes an outer cylindrical portion of bar **887** to engage Belville washer, thereby compressing the Belville washer and moving the friction member **906** into engagement with an outer surface of tubes **756** and **758**. Therefore, the handle assembly **764** is held in position on support tubes **756** and **758**.

[**0165**] When the patient assist cart **740** is used to push a hospital bed or wheelchair, the handles **884** and **886** are rotated beyond the support tubes to the position shown in **FIG. 54**. The cylindrical surface of center bar **887** also compresses the Belville washer **904** and moves the friction member **906** against posts **756**, **758** when in the **FIG. 54** orientation. A shuttle lock **916** on each mounting mechanism **890** is pressed inwardly to move the shuttle member **916** into alignment with stops **898** on couplers **894** to lock the handles in the position shown in **FIG. 54**. Shuttle member **916** is moved in an opposite direction when it is desired to pivot the handles back to the position shown in **FIG. 53**.

[**0166**] **FIG. 65** illustrates a caster braking mechanism **760** of one embodiment of the present invention. Support tubes **756** and **758** are each illustratively mounted over an inner tube **920**. Support tubes **756** and **758** are biased upwardly in the direction of arrow **922** by a spring **924**. A coupler **926** is coupled to each support tube **756**, **758**. Coupler **926** includes spaced apart arms **928** and **930**. Casters **754** are rotatably coupled to plates **748** and **750** for rotation about axis **932**. Casters **754** include a stem **934** having a rotatable brake actuator **936** configured to actuate an internal brake **938** when the actuator **936** is rotated about its longitudinal axis **940**. Illustrative, casters **754** are model number 2944 casters available from Tente, although any suitable caster may be used. An arm **942** has a first end pivotably coupled to coupler **926** by a pin **944** extending between arms **928** and **930**. On opposite end of arm **942** includes an elongated slot **946** located over actuator **936**. Illustratively, the slot is sized so that opposite side walls engage opposite sides of hex shaped actuator **936**. When user uses patient assist cart **740** as a walker and pushes down on handles **884** and **886** with enough force, support tubes **756** and **758** are forced downwardly in the direction of arrow **948** by the patient's weight. Similarly, when the user sits on seat **762**, the user's weight moves support tubes **756** and **758** downwardly in the direction of arrow **948**. Couplers **926** also move downwardly causing arm **942** to pivot about axis **940**, thereby rotating actuator **936** and braking the castor **754**.

[**0167**] In another embodiment of the present invention, the support tubes **756** and **758** are mounted directly over a tube on the casters and spring biased upwardly. Therefore, application of weight to the support tubes cause a brake coupled to the support tubes to engage the casters.

[**0168**] FIGS. **66-68** illustrate details of the mounting arm **804** shown in **FIGS. 53, 54, 57**, and **58**. Arm **804** includes

a head **950** having a flat surface **952** configured to be secured to the display screen **802**, **834**. Head **950** includes outer walls **954** and **956** and a central portion **958** defining slots **960** and **962**. A base **964** is pivotably coupled to the patient assist cart **740** by connector **966**. Base **964** includes first and second spaced apart side walls **968** and **970** and a central portion **972** defining first and second slots **974** and **976**. A bottom linkage **978** includes spaced apart arms **980** and **982** coupled together by a plate **984** as best shown in **FIG. 68**. Arm **980** is coupled between side wall **954** and side wall **968** as shown in **FIG. 66**. Arm **982** is coupled between side wall **956** and side wall **970** by suitable fasteners. Arms **986** and **988** are also pivotably coupled between head **950** and base **964**. Arm **986** has a first end located in slot **960** and a second end located in slot **974**. Arm **988** has a first end located in slot **962** and a second end located in slot **976**. A coupler **990** is secured to plate **984** by suitable fasteners **992** as shown in **FIG. 67**. A gas assist spring **994** includes a first end **996** pivotably coupled to coupler **990** and a second end **998** pivotably coupled between the top arms **986** and **988** by pin **1000**. A cover **1002** is located over the arm components. Base **966** includes a top plate **1004**. As shown in **FIG. 67**, base **964** is secured to plate **1004** by fasteners **1006**. As the arm **804** is pivoted from a generally vertical position as shown in **FIG. 57** to a generally horizontal position shown in **FIG. 58**, the mounting surface **952** rotates so that display **802**, **834** is visible when the arm is either in arm **804** is in the vertical position and in the horizontal position.

[**0169**] As shown in **FIGS. 54 and 61**, the patient assist cart **740** includes a pair of latching mechanisms **1010** which are illustratively formed integrally with the mounting mechanisms **890** for handles **884** and **886**. It is understood that the latch mechanisms **1010** may be separately formed. Each latching mechanism **1010** includes a support having first and second upper arms **1012** and **1014** and first and second spaced apart lower arms **1016** and **1018**. A first latch portion **1020** pivotably coupled between arms **1012** and **1014** by pin **1022**. A second latch portion **1024** is pivotably coupled between arms **1016** and **1018** by pin **1026**.

[**0170**] Latches **1010** are configured to secure the patient assist cart **740** to a hospital bed **1030** as best shown in **FIG. 69**. Bed **1030** illustratively includes a base **1032** and a frame **1034** coupled to the base **1032**. Illustratively, the frame includes a head frame member **1036**. A pair of spaced apart brackets **1038** mounted to head frame member **1036**. Brackets include a cross pin **1040** shown in FIGS. **70-72** which is configured to enter the latch **1010**. Initially, the upper and lower latch portions **1020** and **1024** are located in the orientation shown in **FIG. 70**. Upper latch **1020** includes an arm **1044** and bottom latch **1024** includes arms **1046** and **1048**. Initially, latch members **1020** and **1024** are biased to the position shown in **FIG. 70** by a spring **1050** as the patient assist cart moves toward the bed in the direction of arrow **1052**, the pin **1040** engages arm **1044** of upper latch portion **1020** to pivot upper latch portion **1020** in the direction of arrow **1054**. A distal end of arm **1044** moves along the curved surface **1056** extending between arms **1046** and **1048** of bottom latch portion **1024**. This causes bottom latch portion **1024** to pivot in the direction of arrow **1058** until the end of arm **1044** moves to the position of **FIG. 72** to secure the locking pin within the latch mechanism and hold the latch portions **1020** and **1024** in the locked position. An operator releases the latch mechanism by manually rotating the upper latch portions **1020** in the direction of arrow **1060** in **FIG. 72**. This permits spring **1050** to move the latch portions **1020** and **1024** back to the position shown in **FIG. 70**. Therefore, the patient assist cart **740** can be removed from the bed.

[**0171**] **FIG. 73** illustrates a wheelchair **1062** coupled to the patient assist cart **740**. Front wheels **1064** of wheelchair **1062** are illustratively supported off the ground and latched to the base **742** by latch members **1066**. Therefore, a caregiver can push the wheelchair **1062** and the patient assist cart **740** in a normal manner using handles **1068** of wheelchair **1062**. The patient assist cart **740** can also be coupled to a rear surface **1070** of wheelchair **1062** using locking pins similar to those discussed above. In this embodiment, handles **884** and **886** are pivoted to the position shown in **FIG. 54** and used to push the wheelchair **1062** and patient assist cart **740**.

[**0172**] FIGS. **74-76** illustrate another embodiment of a dual screen display **1100** of the present invention. Display **1100** includes a housing **1102** having a first housing portion **1104** coupled to a second housing portion **1106** to define an interior region therebetween. First and second display screens **1108** and **1110** are located within the interior region of housing **1102**. As shown in **FIG. 75**, first housing portion **1104** includes an outer flange **1112** configured to engage an edge **1114** of second housing portion **1106**. Illustratively, a gasket or other seal is provided to provide a waterproof seal for the housing for holding the first and second display screens **1108** and **1110**. As shown in **FIG. 75**, power supplies **1116** and electric components **1118** for converting electrical signals for display screens **1108** and **1110** are located on first housing portion **1104**. Second housing portion **1106** includes a mounting region **1120** configured to be coupled to the head **950** of arm assembly **804**.

[**0173**] Details of the display **1100** coupled to arm **804** are shown in **FIG. 77** and **78**. Illustratively, arm **804** is coupled to a primary arm **1122** by a coupler **1124**. Base **964** of arm **804** is pivotably coupled to coupler **1124** about axis **1126**. Coupler **1124** is pivotably coupled to primary arm **1122** about axis **1128**. On opposite end of primary arm **1122** is pivotably coupled to another coupler **1130** about pivot axis **1132**. Coupler **1130** is pivotably coupled to a mounting bracket **1134** about a pivot axis **1136**. The arms **1122** and **804** can therefore be moved to a plurality of different orientations in a room to facilitate viewing and data entry into the computer as discussed above. A protective frame **1138** is coupled to display **1104** to protect the display. The arms **804** and **1122** also move the display **1100** to an ergonomic position for entering data as shown in **FIG. 81**.

[**0174**] Another embodiment of a primary arm is illustrated in FIGS. **79A-79C**. Primary arm **1140** is coupled to secondary arm **804** to support a cantilevered load such as display **1100** as indicated at location **1142**. Primary arm **1140** supports the bearing load at location **1144**. Arm **1140** includes three separate linkage arms **1146**, **1148** and **1150** which are grounded at locations **1152**, **1154** and **1156**, respectively. A rigid coupler **1158** is pivotably coupled to each arm **1146**, **1148**, **1150** by connections **1160**, **1162** and **1164**, respectively, that form a triangular pattern. **FIG. 79A** illustrates the primary arm at a +70 degree angle. **FIG. 79B** illustrates the configuration of primary arm **1140** at a zero degree angle, and **FIG. 79C** illustrates the position of primary arm **1140** at a −70 degree angle. Primary arm **1140**

is illustratively two four bar linkages which are out of phase by 90 degrees to achieve maximum stability. As shown in **FIG. 79**B, an extension spring **1166** is coupled to one of the linkage arms **1146**, **1148**, or **1150**. Extension spring **1166** is similar to the spring shown in U.S. Pat. No. 5,826,846, which is incorporated herein by reference.

[**0175**] When primary arm **1140** is at its uppermost angle (i.e. +70 degrees), little or no balance force is required to maintain the angular position of display **1100**. At this position extension spring **1166** is in its natural unextended position and does not provide any counterbalance force to primary arm **1140**. As primary arm **1140** rotates the amount of balance force necessary to hold display **1100** in a neutral position increases linearly with the angle of rotation. As the rotation occurs, spring **1166** extends and supplies a counterbalance force that also increases as spring **1166** extends. Thus, the necessary balance force required by display **1100** is offset by the extension force supplied by spring **1166**.

[**0176**] FIGS. **80-82** illustrate the patient assist cart **740** and the dual display **1100** located in a hospital room **1200**. A patient **1202** is located on a bed **1204**. The patient assist cart **740** is located adjacent a head end of bed **1204**. Therefore, computer **800** on patient assist cart **740** continues to collect patient information while the patient is in room **1200**. Computer **800** is configured to drive the dual display **1100** when the patient assist is in the room **1200**. A cable **1206** extends from computer **800** to the display **1100**. A head wall **1210** which is coupled to wall **1212**. A light **1214** is coupled to wall **1212** above head wall **1210**. In **FIG. 80**, the dual display **1100** and arms **804** and **1122** discussed above are moved to a configuration to position the dual display **1100** in a region **1216** located between the light **1214** and the head wall **1210**. Display **1100** is very close to wall **1212** so that display **1100** is out of the way. In **FIG. 80**, arm **1122** extends generally parallel to wall **1212** and arm **804** extends upwardly from arm **1122**.

[**0177**] **FIG. 81** shows the arms **804** and **1122** moved downwardly to permit a caregiver **1218** to enter data into the computer using the display **1100** as discussed above. The height and angle of display **1100** facilitate use by caregiver **1218** for data entry and viewing. The arm **804** is configured to pivot the display **1100** and align the display **1100** at an ergonomic angle of about 5 degrees to about 60 degrees relative to the ground for data entry and viewing. Preferably the angle is about 20 degrees to about 40 degrees. **FIG. 82** illustrates the arms **804** and **822** moved to an elevated position so that the monitor may be viewed at a position above the head of caregiver **1218**. In **FIG. 82**, the display **1100** is out of reach of children. The arms **1122** and **804** permit the display **1100** to be located at the plurality of different orientations.

[**0178**] **FIG. 83** illustrates additional details of the computer **800** which drives display screens **1108** and **1110** on display **1100** and also drives display screen **802** on patient assist cart **740**. Computer **800** illustratively includes two video cards **1230** and **1232**. The first video card **1230** drives both the display screen **802** on patient assist cart **740** and the first display screen **1108** on display **1100**. The second video cart **1232** drives the second display screen **1110** on display **1100**. In other words, the images on display screen **802** and display screen **1108** are the same. This reduces the cost of computer **800**.

[**0179**] **FIG. 84** is a block diagram illustrating one embodiment of electronic circuitry for coupling the computer **800** located on a patient assist cart **740** or work station to a dual monitor display screen **1100** coupled to an arm **804**, **1122** in the room. The computer **800** on the patient assist cart **740** includes a firewire link to the dual screen display **1100**. Main computer **800** illustratively includes a mux-demux for video, touch screen, TCI/IP communications over the firewire connection. The remote display **1100** has mux-demux with a microcontroller for firewire protocol handling. It is understood that other types of transmission line systems may be used to couple computer **800** to display **1100**. For instance, a Low Voltage Differential Signaling (LVDS) interface may be used to couple computer **800** to dual display screen **1100**.

[**0180**] **FIG. 85** is a block diagram illustrating an alternative embodiment of electronic circuitry for coupling computer **800** located on the patient assist cart **740** to the dual monitor display screen **1100**. The **FIG. 85** embodiment, computer **800** includes mux-demux for sending PCI bus signals over the fire wire connection. Display **1100** has mux-demux with a microcontroller to convert PCI bus signals back to parallel form. LVDS is also an alternative to the firewire in this configuration. FIG. **86** illustrates yet another embodiment of the electronic circuitry for coupling the computer **800** on the patient assist cart **740** to the dual monitor display screen **1110** on the support arm **804**, **1122** within the hospital room **1200**.

[**0181**] Although the invention has been described in detail with reference to certain illustrated embodiments, variations exist within the scope and spirit of the invention as described and as defined in the following claims.

1. A patient monitoring system comprising:

a computer;

an input device coupled to the computer and configured to input patient information; and

first and second display screens coupled to the computer, the computer displaying a first portion of the patient information on the first display screen and a second portion of the patient information on the second display screen.

2. The apparatus of claim 1, wherein the patient information is displayed on a patient chart including patient vital signs taken at predetermined times over a predetermined period of time.

3. The apparatus of claim 1, wherein the input device includes at least one of a physiological monitor, a wireless data receiver, and a manual input device.

4. The apparatus of claim 3, wherein the physiological monitor includes at least one of a heart rate monitor, a temperature sensor, a blood pressure monitor, a blood oxygen level monitor, a scale, an EKG monitor.

5. The apparatus of claim 3, wherein the manual input device is one of a pen based input device, a keyboard, a mouse, a bar code reader, or a voice recognition input device.

6. The apparatus of claim 1, wherein the input device includes a physiological monitor coupled to the computer to provide a real time data input to the computer for storing and displaying patient information.

7. The apparatus of claim 1, wherein the first and second displays are coupled to a base.

8. The apparatus of claim 7, wherein the second display, the input device, and the computer are removable from the base as a separate module for transport with the patient.

9. The apparatus of claim 1, further comprising a third display coupled to the computer, the patient information being displayed on each of the first, second, and third display screens.

10. The apparatus of claim 8, wherein the third display, the input device, and the computer are separate from the first and second displays for transport with the patient.

11. The apparatus of claim 1, wherein the first display screen is larger than the second display screen.

12. The apparatus of claim 11, wherein the first and second displays are coupled to a base so that a top edge of the first and second displays are aligned with each other.

13. The apparatus of claim 12, wherein a portion of the larger first display screen adjacent a bottom edge of the first display screen provides a region for at least one of a menu display area, a pen-based input device, and a touch screen input device.

14. The apparatus of claim 12, wherein the smaller second display, the input device, and the computer are removable from the first larger display screen as a separate module for transport with the patient.

15. The apparatus of claim 1, wherein the computer is coupled to a communication network to transmit patient information to a remote location and to receive patient information from the remote location.

16. A system comprising:

a computer including a memory;

a medical device for treating a patient, the medical device including an indicator configured to provide a signal indicating when the medical device is in use to treat the patient; and

a coupler coupled to the computer for receiving the input signal from the indicator, the computer being configured to store the amount of time that the medical device is in use to treat the patient in the memory.

17. The apparatus of claim 16, wherein the computer is configured to generate a bill for use of the medical device based upon the amount of time that the medical device is used to treat the patient.

18. The apparatus of claim 17, wherein the medical device includes a unique identification so that the computer generates an itemized bill indicating the particular medical device used to treat the patient.

19. The apparatus of claim 16, wherein the indicator includes a wireless data transmitter and the coupler is a wireless data receiver.

20. The apparatus of claim 19, wherein the coupler is also configured to receive a signal from a wireless data transmitter badge worn by a caregiver when the caregiver enters a room in which the computer and the patient are located.

21. The apparatus of claim 20, wherein the computer records the amount of time that the caregiver is in the patient's room.

22. The apparatus of claim 21, wherein the computer is configured to generate a bill for caregiver time based upon the amount of time that the caregiver was in the patient's room.

23. The apparatus of claim 20, wherein the computer is configured to recognize a particular caregiver located in the room and automatically log the caregiver on to the computer.

24. A patient care computer system for use by a caregiver wearing an identification badge which includes a wireless data transmitter that uniquely identifying each caregiver, the apparatus comprising:

a computer including a memory for storing patient information;

a display screen coupled to the computer;

an input device coupled to the computer for inputting patient information;

a wireless data receiver coupled to the computer; and

means for detecting when a caregiver enters a room in which the computer and patient are located, the detecting means determining whether the caregiver is authorized to use the computer system and, if so, automatically logging the caregiver in to the computer system.

25. The apparatus of claim 24, wherein the computer automatically provides an indication of any messages for the particular caregiver logged in to the system on the display screen.

26. The apparatus of claim 25, wherein the computer is coupled to a communication network for receiving information and messages from a remote location and for transmitting information and messages to the remote location.

27. The apparatus of claim 25, wherein the messages include both voice mail messages and e-mail messages.

28. The apparatus of claim 24, wherein the input device includes at least one of a physiological monitor and a manual input device.

29. The apparatus of claim 24, wherein the computer system determines the amount of time that the particular caregiver is located in the room and stores the time in the memory.

30. The apparatus of claim 29, wherein the computer system generates a bill for caregiver time based upon the actual amount of time that the caregiver is in the room treating the patient.

31. The apparatus of claim 24, wherein the computer system is configured to log on all authorized caregivers within the room so that all the caregivers can access the system.

32. The apparatus of claim 24, further comprising a medical device for treating the patient, the medical device including an indicator configured to provide a signal indicating when the medical device is in use to treat the patient, the wireless data receiver being configured to receive a signal from the indicator so that the computer stores the amount of time that the medical device is in use to treat the patient in the memory of the computer.

33. The apparatus of claim 32, wherein the computer is configured to generate a bill for use of the medical device based upon the amount of time that the medical device is used to treat the patient.

34. A system comprising:

means for monitoring at least one physiological condition of a patient on a real time basis;

means for recording information related to a treatment of the patient and the time that the treatment was given to the patient; and

means for determining the effectiveness of the treatment of the patient by further monitoring the physiological conditions on a real time basis after the treatment.

35. The apparatus of claim 34, wherein the treatment includes at least one of a drug treatment, an IV treatment, and a therapy device treatment.

36. The apparatus of claim 34, wherein the patient is located on a patient support surface and the treatment includes a therapy performed by the patient support surface including at least one of rotational therapy, percussion therapy, vibration therapy and thermal treatment therapy.

37. The apparatus of claim 34, wherein the treatment is a therapy device performing therapy on the patient, the system including a computer for monitoring the amount of time that the therapy is performed.

38. The apparatus of claim 34, wherein the system includes a computer and a display screen coupled to the computer, the computer displaying the physiological conditions of the patient on a real time basis and also displaying the times that the treatments occur on the display screen so that a caregiver can monitor the effectiveness of the treatments.

39. A computer system assigned to a patient or to a bed, cart or other device upon which the patient rests or with which the patient is associated, the system comprising a computer, a plurality of devices for sensing various physical conditions and characteristics of the patient, each device having an output coupled to the computer, and a display arranged to present information related to the patient.

40. The system of claim 39, wherein the system comprises a plurality of input devices for inputting data and instructions concerning the patient.

41. The system of claim 39, wherein the system is configured to store and retrieve data concerning the patient and the sensing devices and to display such data over a period of time to show relationships on a time basis.

42. The system of claim 39, wherein the system comprises a memory in which the patient's history is stored for retrieval and display.

43. The system of claim 39, wherein the system comprises sensing devices including at least one of heart rate sensors, respiratory rate sensors, neurological monitoring sensors, and temperature sensors.

44. The system of claim 39, wherein the system comprises means for inputting fluid, electrolyte and nutrition data into the memory on a time basis.

45. The system of claim 39, wherein the system comprises a communication network providing for remote monitoring of patient data and remote inputting of data and instructions.

46. The system of claim 39, wherein the system further comprises a video imaging input to the computer to provide images of the patient.

47. The system of claim 39, wherein the system further comprises ultrasound image input to the computer.

48. The system of claim 39, wherein the system further comprises an x-ray image input to the computer.

49. The system of claim 39 in which the patient status and condition is stored and used for a time-based presentation on the display.

50. A system for monitoring patient information, the computer system comprising:

a processor;

a memory coupled to the processor;

a user interface coupled to the processor to permit a caregiver to input instructions into the system;

a display screen coupled to the processor;

a power supply coupled to the processor; and

a connector module configured to couple the system to a medical device including at least one of a physiological monitor, a treatment device, and a therapy device, the medical device using the processor, the user interface, the power supply, and the display of the system to operate the medical device, thereby reducing redundant components in the medical device.

51. The apparatus of claim 50, wherein the medical device includes at least one of a vital signs monitor, an IV pump, a ventilator, a defibrilator, a compression boot and the like.

52. The apparatus of claim 50, wherein the user interface includes a voice recognition input device.

53. The apparatus of claim 50, wherein the user interface is a graphical user interface.

54. The apparatus of claim 50, wherein a plurality of medical devices are coupled to the computer system, the computer monitoring output signals from the medical devices on a real time basis to provide a time-based presentation of patient information on the display screen.

55. A patient monitoring system comprising:

a computer;

a display screen coupled to the computer; and

a plurality of physiological monitors coupled to the computer, the computer displaying at least two indicators on the display screen related to at least two of a heart rate signal, a respiratory rate, fluid/electrolyte/nutrition information, temperature, neurological monitoring, and blood pressure.

56. The system of claim 55, wherein at least three indicators are displayed.

57. The system of claim 55, wherein at least four indicators are displayed.

58. The system of claim 55, wherein at least five indicators are displayed.

59. A patient assist apparatus comprising:

a base having a plurality of casters;

a support coupled to the base;

an IV pole coupled to the support; and

a brake mechanism coupled to at least one of the casters and to the support, brake mechanism being configured to brake the at least one caster when a predetermined weight is applied to the support.

60. The apparatus of claim 59, further comprising a seat coupled to the support, the brake mechanism being configured to brake the at least one caster when the predetermined weight is applied to the seat.

61. The apparatus of **59**, further comprising a handle assembly coupled to the support, the brake mechanism being configured to apply the brake to the at least one caster when the predetermined weight is applied to the handle assembly, and a coupling mechanism configured to secure the handle assembly to the support, the coupling mechanism being adjustable to permit a height of the handle assembly on the support to be adjusted.

62. The apparatus of **59**, further comprising a spring configured to bias the support upwardly relative to the base and a link coupled between the support and the brake mechanism, the support moving downwardly when the predetermined weight is applied to the support, thereby moving the link to actuate the brake mechanism.

63. A walker apparatus comprising:

a base;

a support coupled to the base, the support including a handle configured to be gripped by a patient;

a seat having a first end portion and a spaced apart second end portion, the first end portion being pivotably coupled to the support so that the seat is movable between an upwardly pivoted seating position and a downwardly pivoted storage position; and

a seat support pivotably coupled to the second end portion of the seat, the seat support being movable from a first position aligned generally parallel with the seat and a second position aligned transverse to the seat to support the seat in the seating position.

64. The apparatus of claim 63, further comprising a coupler configured to attach the seat support to the seat, the coupler being configured to hold the seat support in the second position automatically when the seat is moved to its upwardly pivoted seating position.

65. The apparatus of claim 63, wherein the base includes a plurality of casters.

66. The apparatus of claim 63, wherein the seat support is formed to include first and second spaced apart legs configured to engage the base to support the seat in the seating position.

67. The apparatus of claim 63, wherein the seat support is formed from a continuous elongated piece of material configured to define the seat support.

68. The apparatus of claim 63, wherein the seat is aligned generally perpendicular to the support when the seat is in its upwardly pivoted seating position and the seat is aligned generally parallel to the support when the seat is in the downwardly pivoted storage position.

69. A patient assist apparatus comprising:

a walker having a handle to assist movement of a patient;

a computer coupled to the walker;

a display coupled to the computer; and

a movable arm having a first end coupled to the walker and a second end coupled to the display.

70. The apparatus of claim 69, wherein the walker includes a base having a plurality of casters and a support coupled to the base, the handle being coupled to the support.

71. The apparatus of claim 69, further comprising a plurality of IV poles coupled to the support.

72. The apparatus of claim 69, further comprising a battery coupled to the walker and the computer.

73. The apparatus of claim 72, further comprising a battery charger coupled to the walker and the battery.

74. The apparatus of claim 69, further comprising an isolation transformer coupled to the walker.

75. The apparatus of claim 69, further comprising an input device coupled to the computer and configured to input patient information.

76. The apparatus of claim 75, wherein the display includes first and second display screens coupled to the computer, the computer displaying a first portion of the patient information on the first display screen and a second portion of the patient information on the second display screen.

77. The apparatus of claim 69, wherein the input device includes at least one of a physiological monitor, a wireless data receiver, and a manual input device.

78. The apparatus of claim 77, wherein the physiological monitor includes at least one of a heart rate monitor, a temperature sensor, a blood pressure monitor, a blood oxygen level monitor, a scale, an EKG monitor.

79. The apparatus of claim 77, wherein the manual input device is one of a pen based input device, a keyboard, a mouse, a bar code reader, or a voice recognition input device.

80. The apparatus of claim 75, wherein the input device includes a physiological monitor coupled to the computer to provide a real time data input to the computer.

81. A patient assist apparatus comprising:

a base having a plurality of casters;

a support coupled to the base, the support having first and second sides;

a latch mechanism coupled to the first side of the support, the latch mechanism being configured to couple the support to a patient support apparatus; and

a handle assembly coupled to the support, the handle assembly including first and second handles movable from a first orientation located on the first side of the support to provide support handles for a patient to a second orientation located on the second side of the support to provide push handles for use when the support is coupled to the patient support apparatus.

82. The apparatus of claim 81, further comprising a locking mechanism configured to secure the first and second handles in the second orientation.

83. The apparatus of claim 81, wherein the patient support apparatus is a bed.

84. The apparatus of claim 81, wherein the patient support apparatus is a wheelchair.

85. The apparatus of claim 81, further comprising a computer coupled to the support, the computer including a physiological monitoring module configured to receive data from the patient.

86. The apparatus of claim 85, further comprising a display screen coupled to the computer and a movable arm having a first end coupled to the support and a second end coupled to the display screen.

87. The apparatus of claim 81, further comprising a coupling mechanism configured to secure the handle assembly to the support, the coupling mechanism being adjustable to permit a height of the handle assembly on the support to be adjusted.

88. A patient computer system comprising:

a display having first and second display screens located in a room;

a cart configured to move with a patient outside the room and to remain with the patient inside the room;

a computer coupled to the cart; and

a third display screen coupled to the cart, the computer being coupled to the third display screen and being coupled to the first and second display screens when the cart is in the room.

89. The apparatus of claim 88, wherein the computer includes first and second video cards, the first video card being configured to drive the first and third display screens, the second video card being configured to drive the second display screen.

90. The apparatus of claim 88, further comprising an input device coupled to the computer and configured to input patient information.

91. The apparatus of claim 90, wherein the computer displays a first portion of the patient information on the first display screen and a second portion of the patient information on the second display screen.

92. The apparatus of claim 90, wherein the input device includes at least one of a physiological monitor, a wireless data receiver, and a manual input device.

93. The apparatus of claim 92, wherein the physiological monitor includes at least one of a heart rate monitor, a temperature sensor, a blood pressure monitor, a blood oxygen level monitor, a scale, an EKG monitor.

94. The apparatus of claim 92, wherein the manual input device is one of a pen based input device, a keyboard, a mouse, a bar code reader, or a voice recognition input device.

95. The apparatus of claim 90, wherein the input device includes a physiological monitor coupled to the computer to provide a real time data input to the computer.

96. A display for a computer, the display comprising:

a housing having an interior region;

a first display screen located in a first portion of the interior region of the housing; and

a second display screen located in a second portion of the interior region of the housing, the first and second display screens being coupled to the computer so that the computer displays information on both the first and second display screens.

97. The apparatus of claim 96, wherein the housing includes a first portion and a second portion coupled to the first portion by a waterproof seal.

98. The apparatus of claim 96, wherein the information displayed on the patient chart including patient vital signs taking a predetermined times over a predetermined time period.

99. The apparatus of claim 96, further comprising a microphone located in the interior region of the housing.

100. The apparatus of claim 96, further comprising a video camera located in the interior region of the housing.

101. The apparatus of claim 96, wherein the first display screen and the second display screen each provide a touch screen input device.

* * * * *