United States Patent [19]

Rice et al.

[11] **4,440,096**

[45] **Apr. 3, 1984**

[54] **ADJUSTABLE WORD PROCESSING TABLE AND THE LIKE**

[75] Inventors: **Thomas E. Rice**, Cheswick; **Peter T. Young**, Oakmont, both of Pa.

[73] Assignee: **Haskell of Pittsburgh, Inc.**, Verona, Pa.

[21] Appl. No.: **330,894**

[22] Filed: **Dec. 15, 1981**

[51] **Int. Cl.**[3] **A47F 5/12**

[52] **U.S. Cl.** **108/3**; 108/4; 108/5; 108/7; 108/20; 108/147

[58] **Field of Search** 108/1, 3, 4, 5, 6, 7, 108/8, 9, 10, 96, 102, 147, 143, 20

[56] **References Cited**

U.S. PATENT DOCUMENTS

2,249,455 7/1941 Caldwell 108/147
4,365,561 12/1982 Tellier et al. 108/7

FOREIGN PATENT DOCUMENTS

53774 7/1964 Belgium 108/7
2301305 7/1973 Fed. Rep. of Germany 108/20
739507 11/1932 France 108/143

Primary Examiner—William E. Lyddane
Assistant Examiner—Mark W. Binder
Attorney, Agent, or Firm—Webb, Burden, Robinson & Webb

[57] **ABSTRACT**

An adjustable, split top table for accommodating word processing equipment and the like comprises a base support, a main frame connected to the base support and two independently movable table tops (front and rear) adjustably secured to the main frame. A first lead screw is mounted between the main frame and the front table top so as to slope forward at an acute angle to the vertical. A second lead screw is mounted between the main frame and a front section of the rear table top and parallel to the first lead screw. A third lead screw is pivotally mounted between the main frame and a middle section of the rear table top. Drive means are coupled to the lead screws to independently raise and lower the first table top, raise and lower the rear table top and tilt the rear table top.

9 Claims, 12 Drawing Figures

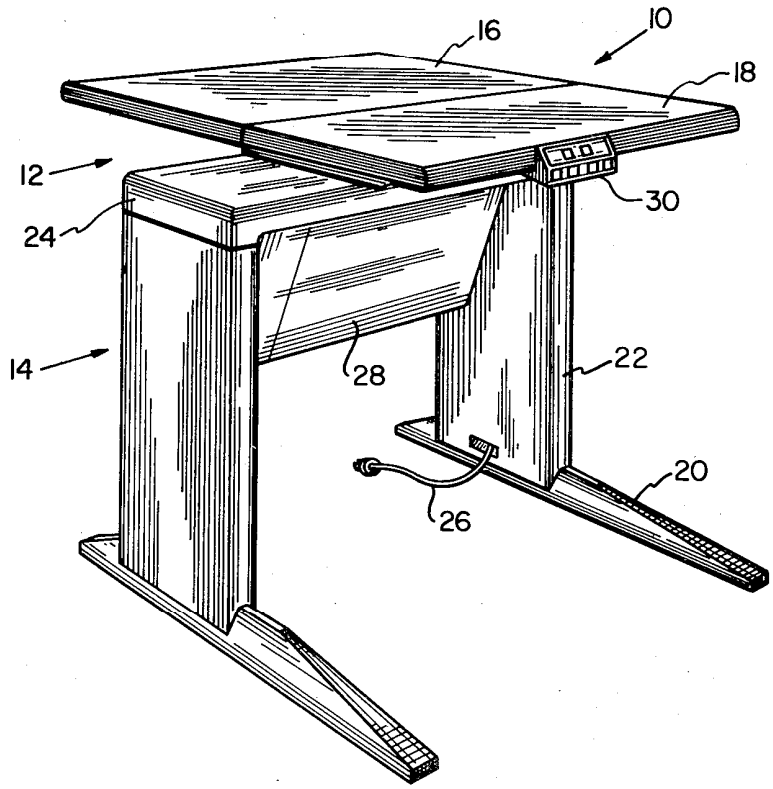

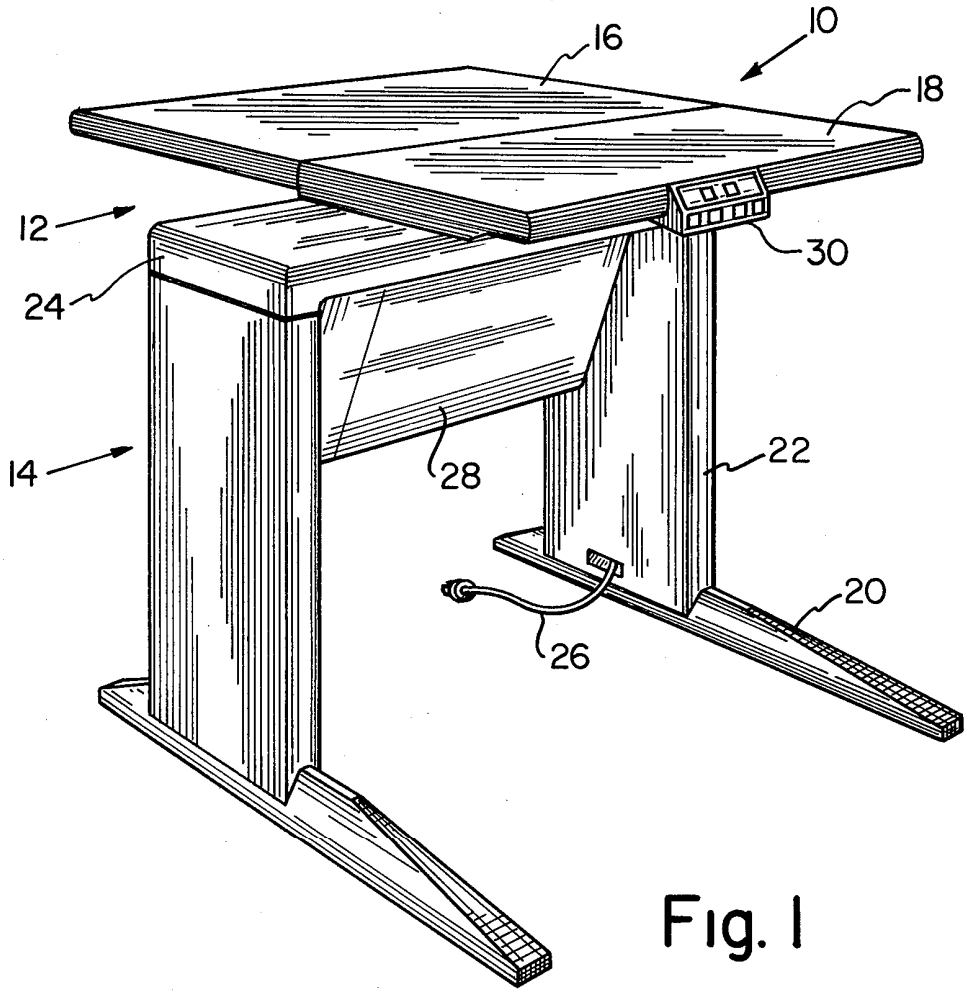
10
16
18
12
30
24
14
28
22
20
26

Fig. 1

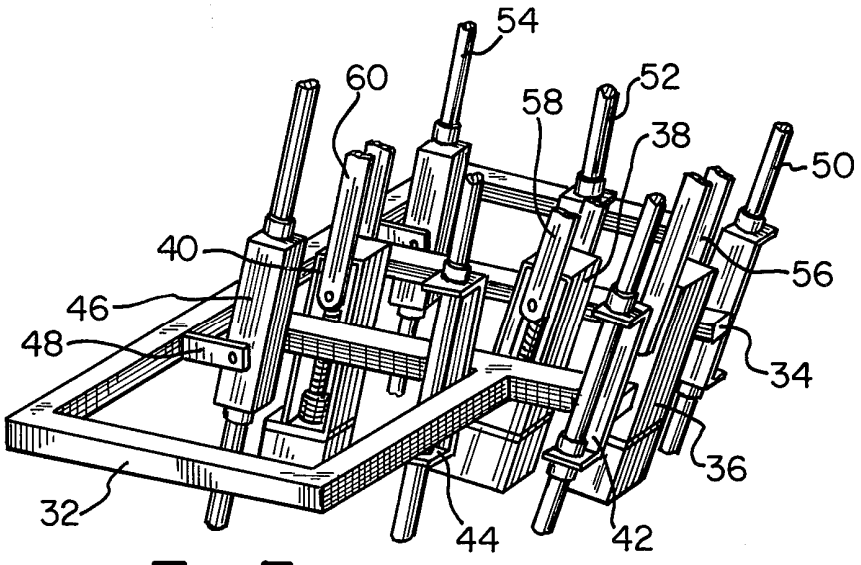
54
60
52
58
38
50
40
56
46
48
34
36
32
44
42

Fig.3

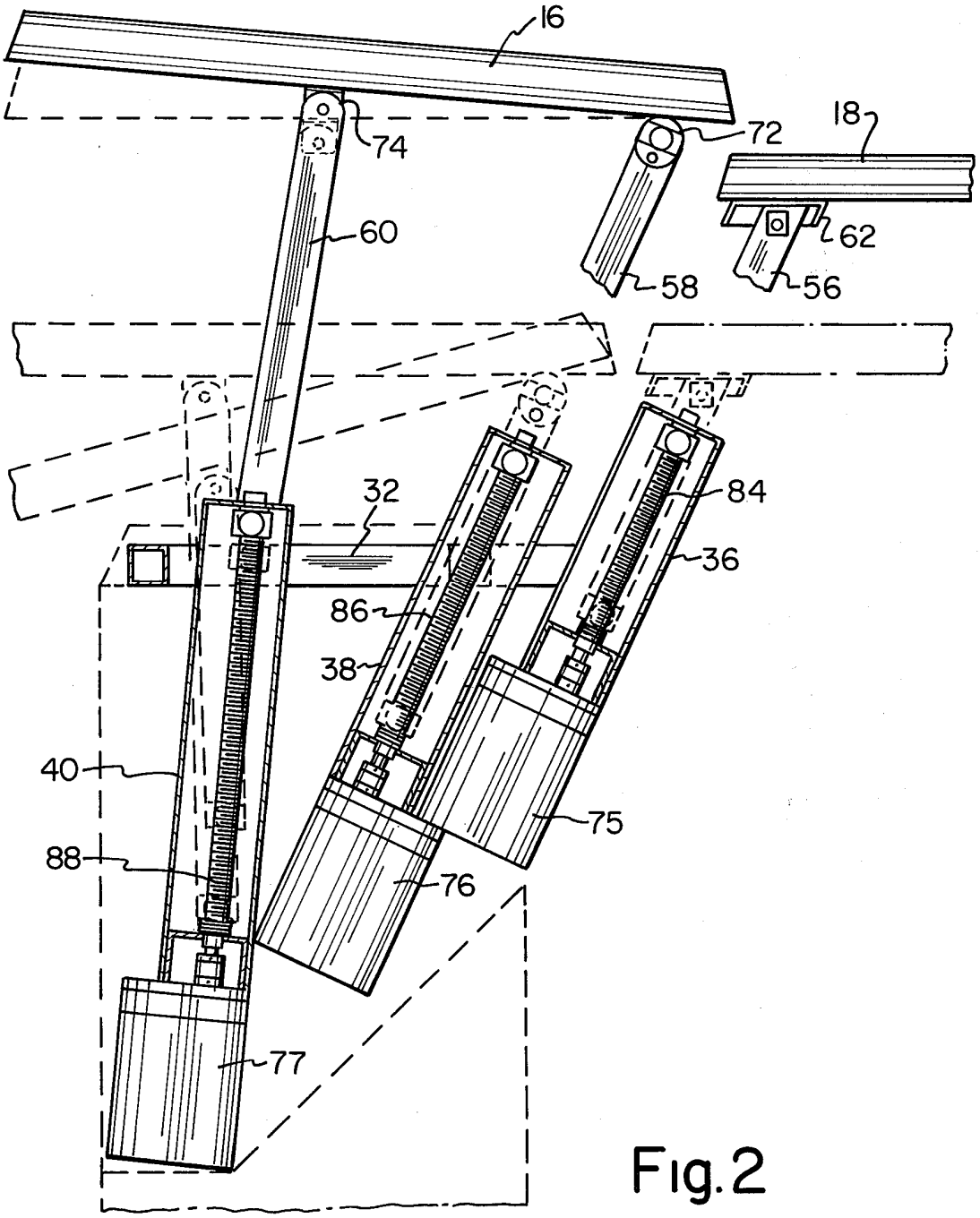

Fig. 2

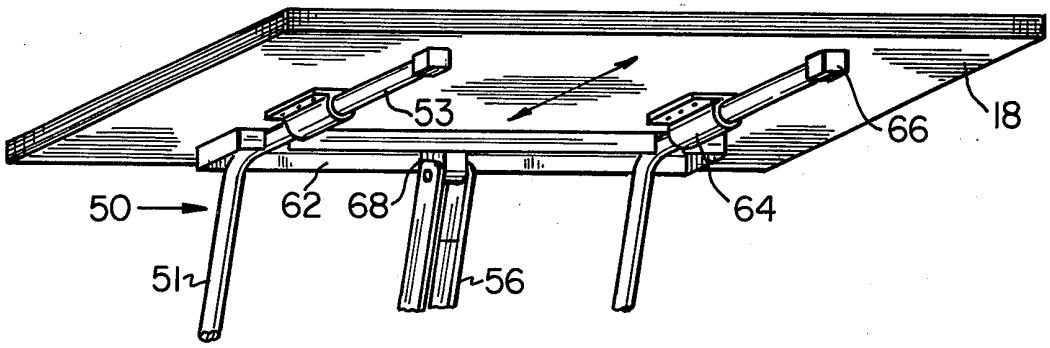

Fig. 4

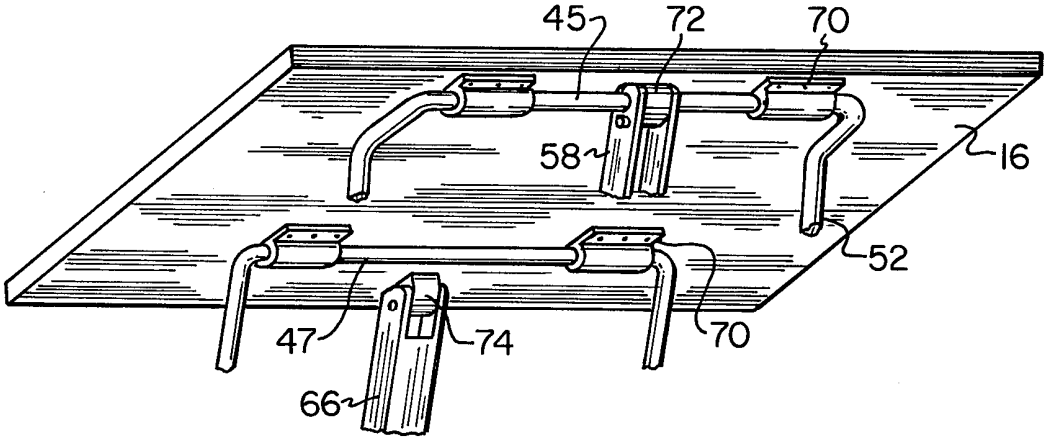

Fig.5

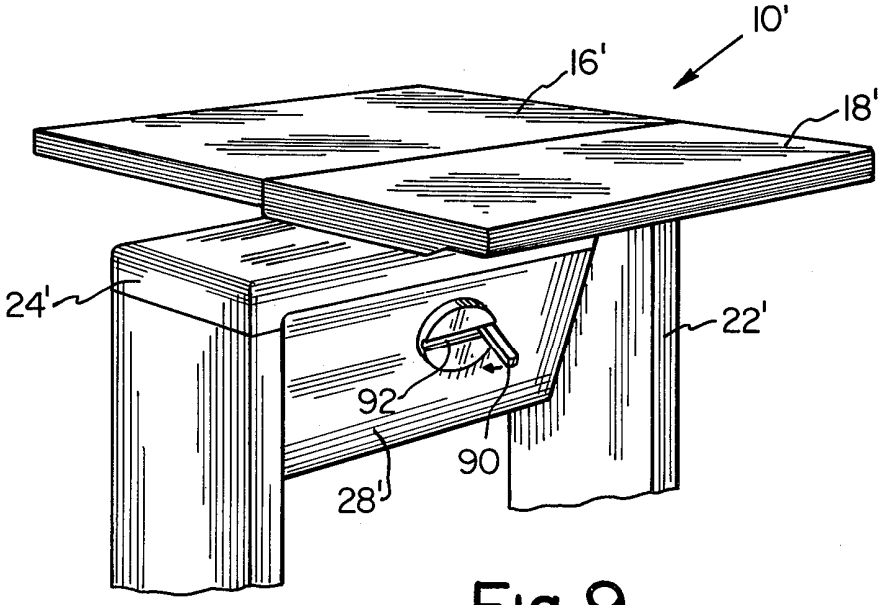

Fig. 9

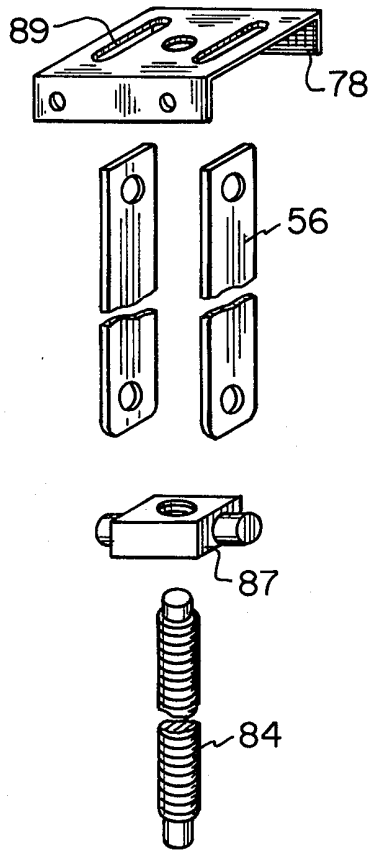

Fig. 7

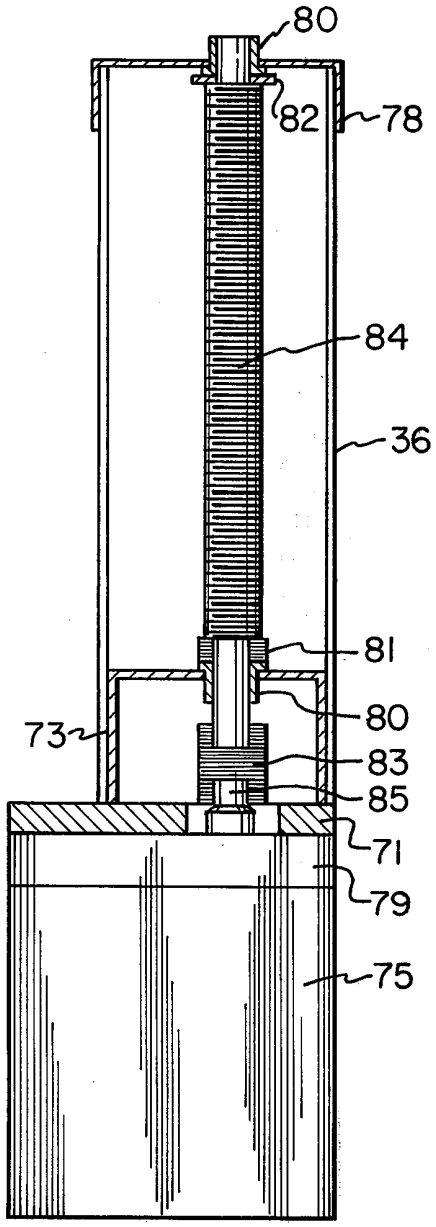

Fig. 6

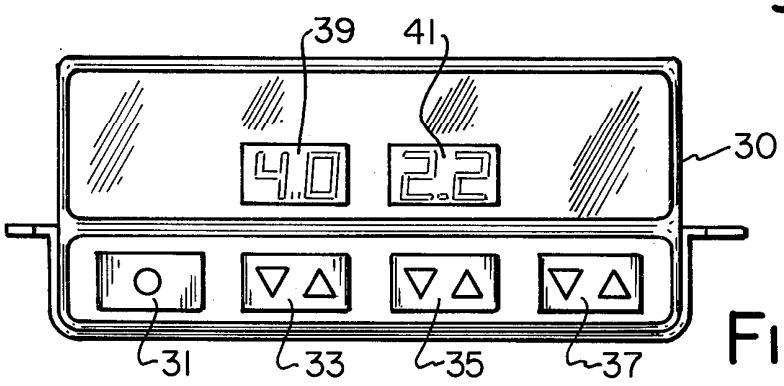

Fig. 8

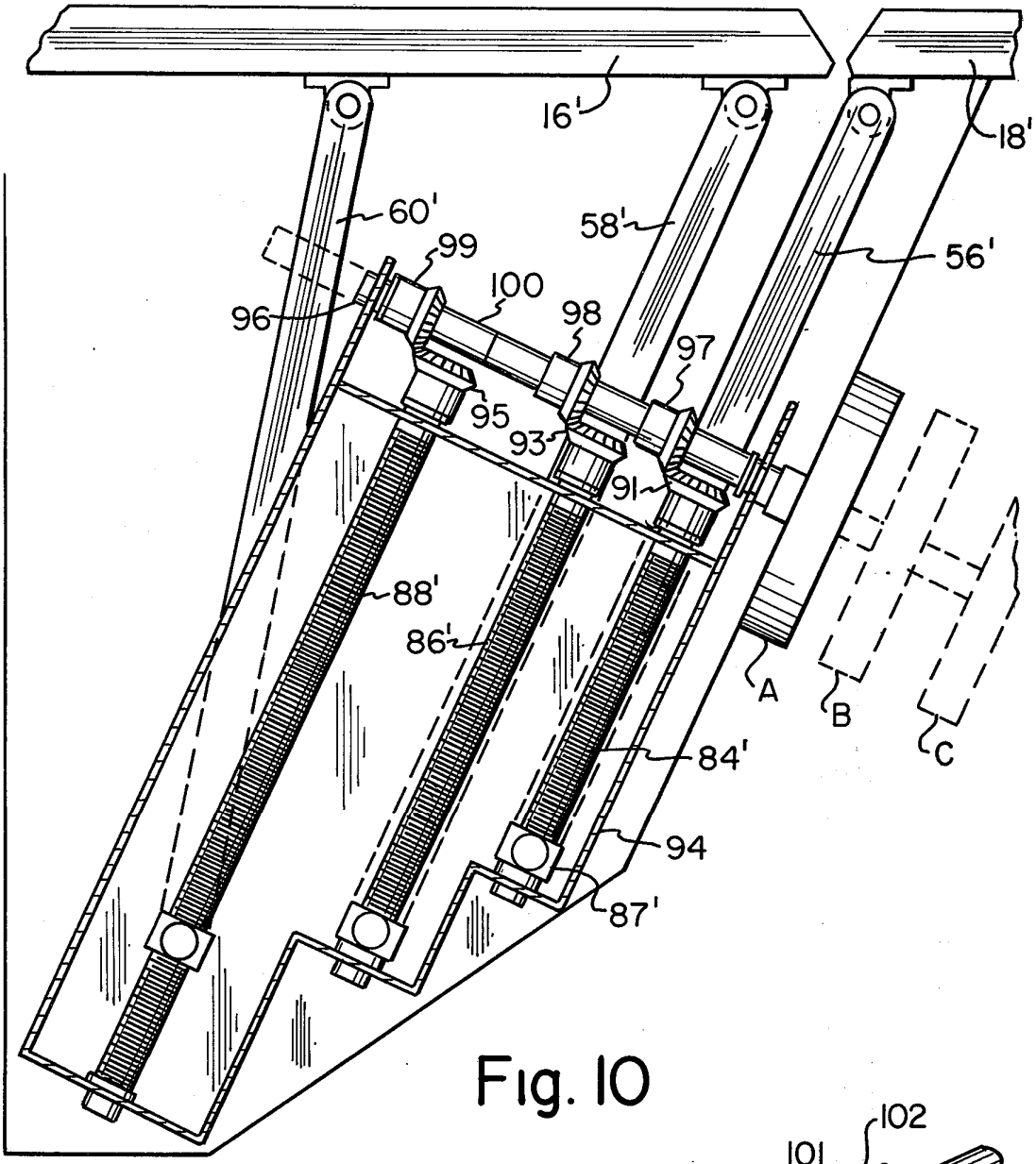

Fig. 10

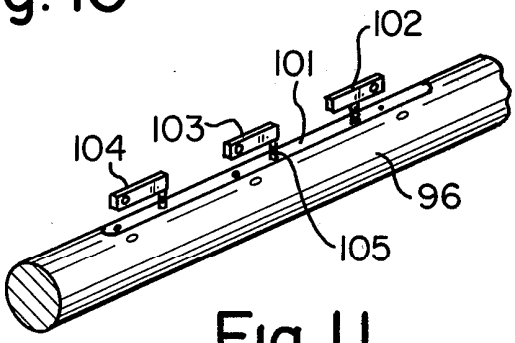

Fig. 11

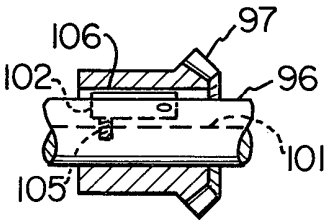

Fig. 12

ADJUSTABLE WORD PROCESSING TABLE AND THE LIKE

FIELD OF THE INVENTION

Our invention relates to computer work stations and, more particularly, to split top tables having individually adjustable front and rear planar surfaces for accommodating word processing equipment and the like.

DESCRIPTION OF THE PRIOR ART

With word processing and other computer related systems becoming commonplace in offices and business in general, a new form of work station or furniture for supporting such electronic equipment is evolving. These work stations for the electronic office range from simple support structures to fully ergonomic designs.

Much of this electronic equipment is of the multiple component type, for example, CRT units which include a keyboard and a screen. The keyboard must be maintained at a level compatible with manual input, whereas the screen must be maintained at near eye level for ease of visual observation. Because of the expense of electronic equipment, normally a single unit or a small number of units are provided for an entire office staff. For this reason work stations including adjustable support surfaces are being developed to permit positioning of the various pieces of electronic equipment at alternate height levels to accommodate the wide range of uses and of user sizes which are commonplace in most offices. In addition, it has been recognized that since lighting in most offices is fixed, it is often desirable to have the capability to adjust any visual display to prevent glare.

SUMMARY OF THE INVENTION

Our invention permits independent adjustment of the support structure for separate pieces of electronic equipment such as the keyboard and the screen. We are thus able to provide a single piece of electronic equipment support structure which is readily adjustable to accommodate a wide range of uses as well as users in terms of their size. In a preferred form, our invention may include actual height location information so repeat users may merely approach the table, set the controls and proceed with their work knowing that the height location of both the keyboard and the screen will be correct. All of these advantages accrue on a piece of equipment which is totally functional, easily maintained and producible at a cost within the reach of the average office and business alike.

Our invention is an adjustable, split top table for accommodating word processing equipment and the like comprising a base support for resting on the floor, a main frame connected to the base support and a front and rear table top mounted to the main frame for separate vertical adjustment. A first lead screw is mounted between the main frame and the front table top and is sloped forward at an acute angle to the vertical. A second lead screw is mounted between the main frame and a forward section of the rear table top and in parallel relationship to the first lead screw. A third lead screw is pivotally mounted between the main frame and a central portion of the rear table top. Drive means are provided for driving the first lead screw to raise and lower the front table top, of driving the second lead screw to tilt the rear table top and of driving the second and third lead screw to raise and lower the rear table top. The drive means may be individual electronic motors or may be a manual crank. In a preferred form of the invention utilizing individual electronic motors, a control panel is provided which gives a digital readout of the height location.

BRIEF DESCRIPTION OF THE DRAWINGS

FIG. **1** is a perspective view of the electrically operated form of our adjustable split top table;

FIG. **2** is a side elevation partly in section showing the operating mechanism of the table of FIG. **1**;

FIG. **3** is a perspective view showing the main frame and the various components connected thereto;

FIG. **4** is a perspective view of the front table top showing the connections thereto;

FIG. **5** is a perspective view of the rear table top showing the connections thereto;

FIG. **6** is a partial section taken through one of the motor housings;

FIG. **7** is an exploded view of certain components of the motor housing of FIG. **6**;

FIG. **8** is a front elevation of the control panel;

FIG. **9** is a perspective view of the manual form of our adjustable split top table;

FIG. **10** is a side elevation partly in section showing the operating mechanism of the table of FIG. **9**;

FIG. **11** is a perspective view of a portion of the main shaft of the operating mechanism of FIG. **10**; and

FIG. **12** is an elevational view partly in section showing the engagement of the shaft to the miter gear.

DESCRIPTION OF THE PREFERRED EMBODIMENTS

The table, generally designated **10**, comprises a top **12** and a base **14**, FIG. **1**. The table top **12** is split so as to include two planar surfaces, namely, rear top **16** and front top **18**. The base includes legs **20**, side panels **22** extending upward from the legs **20** and a top panel **24** extending between the side panels **22**. A front panel **28** extends between the side panels **22** and below the top panel **24** and angles downward away from the front of the table so as to accommodate the knees and legs of a user. A standard cord **26** connects to an outlet (not shown) so as to make the table **10** operational through the control panel **30** positioned along the front portion of front top **18**. An appropriate visual shield for the operating mechanism such as a bellows between the table tops **10** and **24** and a safety shield between the split tops **16** and **18** may be utilized but are not shown.

The mechanism for vertically adjusting the rear top **16** and front top **18** and tilting the rear top **16** is located rearward of the front panel **28** and is illustrated in FIG. **2**. Three individualized adjustment means and drive means are provided for this purpose. Housing **36** containing a lead screw **84** and driven by motor **75** positioned below housing **36** connects to the rear of front table top **18** through bracket **62** and a pair of arms **56** movably mounted to lead screw **84**. Lead screw **84** and motor housing **36** are positioned so as to slop forward at an angle on the order of 25° to the vertical. Activation of motor **75** causes front table top **18** to advance upward and forward or downward and rearward between the position shown in dotted lines and the position shown in solid lines.

Motor housing **38** containing lead screw **86** and driven by motor **76** is positioned rearward but parallel to motor housing **36** and connects to the front underside

of rear table top **16** through connector **72** which in turn connects to a pair of arms **58** operably connected to the lead screw **86**. Arms **58** provide the support for the front portion of rear table top **16**. The middle of rear top **16** is supported by a pair of arms **60** connected to the underside of table top **16** by connector **74**. Arms **60** are operably connected to lead screw **88** contained within motor housing **40** driven by motor **77**. Housing **40** is positioned rearward of housing **38** and is pivotably connected to main frame **32** as will be described hereinafter. To raise or lower rear table top **16** between the position shown in the dotted line and the solid line of FIG. **2**, motors **76** and **77** are simultaneously and automatically activated to cause the upward and forward or downward and rearward movement comparable to that of front top **18**. To cause tilting of rear top **16** only motor **77** is activated thereby raising or lowering the central portion of rear top **16** while the front portion is pivotably held in place at connector **72**.

The main frame **32** is substantially rectangular and is formed of square tubing, FIG. **3**. A pair of parallel and spaced square tubing members **34** extend forward along either side of the longitudinal central axes of the table. The three motor housings **36**, **38** and **40** are mounted in the space formed between and to the parallel members **34**. Associated with each motor housing are side brackets which accommodate the legs of support arms which connect to the respective table tops.

Specifically, a pair of U-shaped support brackets **42** are connected to the respective members **34** in line with motor housing **36** to accommodate legs **50** which assist in the support for the front top **18**, FIGS. **3** and **4**. In a similar manner, U-shaped side brackets **44** connect to respective members **34** in alignment with motor housing **58** to house rods **52** which assist in the support for the front of rear top **16**, FIGS. **3** and **5**. Side brackets **46** which are in alignment with motor housing **40** are pivotally connected to the rear of main frame **32** through a pivotal connection to flanges **48** extending forward from the rear of main frame **32**. Brackets **46** house legs **54** which assist in the support for the central area of rear top **16**, FIGS. **2**, **3** and **5**.

The detailed support of front top **18** is shown in FIG. **4**. The pair of arms **56** which extend from the lead screw **84** connects to lugs **68** which depend from a main bracket **62** which extends laterally along the bottom surface of top **18** and is secured to top **18** such as by lead screws or the like. Each of the pair of side legs **50** is bent to include a depending section **51** and a horizontal section **53**. The horizontal section **53** is mounted within nylon slides **64** which are screwed into the bottom of the table top **18**. Stops **66** are positioned at the end of rods **53** so that the table top can be manually moved forward and rearward between the bracket **62** and the forward stop **66**.

The detailed support of the rear table top **16** is illustrated in FIG. **5**. The upstanding legs **52** are a continuation of the support rod **45** which is connected to the front portion of table top **16** by a pair of spaced mounting brackets **70**. The arms **58** which extend upwardly from the lead screw **86** likewise connect to the support rod **45** by means of a nylon connector **72**. The legs **54** are extensions of support rod **47** which is secured to the central portion of table **16** by spaced mounting brackets **70**. The arms **60** which are operable through lead screw **88** connect to table **16** rearward of the support rod **47** by means of a pivotal connection to coupling **74**.

The motor **75**, motor housing **36** and certain integral parts are illustrated in FIGS. **6** and **7**. It should be noted that the other two motor housings **38** and **40** are similarly constructed. Motor housing **36** is closed off at its upper end by top bracket **78** which includes a pair of slots **89** through which arms **56** extend. The bottom of motor housing **36** is closed off by bottom plate **71**. Extending upward within the housing **36** from bottom plate **71** is bottom bracket **73**.

A lead screw **84** is supported between top bracket **78** and bottom bracket **73** by means of flange bearing **80** and thrust washer **82** in the area of top bracket **78** and thrust bearing **81** and flange bearing **80** in the area of bottom bracket **73**. Lead screw **84** terminates within flexible coupling **83** which also connects to motor shaft **85**. Motor shaft **85** extends through gear box **79** and is driven by motor **75**. A movable mounting block or traveling block **87** threadably engages lead screw **84** and has connected to it the arms **56**. As lead screw **84** rotates, mounting block **87** moves up or down along lead screw **84** depending upon the direction of rotation.

The controls, the details of which do not form a part of our invention, for activating the motor **75**, **76** and **77** are contained in the control panel **30** located at the front of top surface **18**, FIGS. **1** and **8**. Control panel **30** includes an on-off switch **31** for the entire unit and three individual control switches **33**, **35** and **37** to effect the various movements of the table **10**. Specifically, switch **33** activates motor **75** to raise or lower the front table top **18**. Switch **35** activates motor **76** and **77** to raise or lower rear table top **16**. Switch **37** activates only motor **77** to cause upward or downward tilting of rear table **16**. Associated with the raising and lowering switches **33** and **35** are digital readouts **39** and **41**, respectively. The readouts **39** and **41** display the actual position of the table top within the range of movement for that table top.

An alternate embodiment of our invention in which the split table top surfaces are manually operable is illustrated in FIGS. **9** through **12**. Like parts are identified by the same numeral followed by a prime.

The table, generally designated **10'**, includes a front top **18'** and a rear top **16'**, FIG. **9**. Table **10'** also includes a top panel **24'**, side panels **22'** and front panel **28'** as in the earlier embodiment. Tops **16'** and **18'** are controlled manually by means of a head crank **90** which is pivotable into a slot **92** contained within front panel **28'** so to be substantially flush with panel **28'**.

The movements of the table tops **16'** and **18'** are identical with the earlier embodiment but are now controlled by rotation of a main shaft **96** which is associated with lead screws **84'**, **86'** and **88'** as will be described hereinafter, FIG. **10**. A single housing **94** is mounted to the main frame. Housing **94** contains the lead screws with their movable mounting blocks and their respective arm pairs **56'**, **58'** and **60'** as in the earlier embodiment. However, lead screws **84'**, **86'** and **88'** are rotatably secured to one end of the housing **94** and terminate at the opposite end in miter gears **91**,**93** and **95**, respectively. Miter gears **91**, **93** and **95** are adapted to cooperate with miter gears **97**, **98** and **99**, respectively which are freely mounted on main shaft **96**.

Shaft **96** includes a continuous slot **101** in which three keys **102**, **103** and **104** are spaced and secured, FIG. **11**. Each key is spring loaded by means of springs **105** so as to be urged out of slot **101**. A series of spacers **100** are positioned between the miter gears **97**, **98** and **99** and the spacers **100** retain the keys **102**, **103** and **104** within the

confines of slot **101** of shaft **96** until the shaft is moved longitudinally into its various operative positions.

Each miter gear **97**, **98** and **99** is keyed to rotate with the shaft and miter gear **97** illustrated in FIG. **12** is exemplary. Miter gear **97** includes an internal slot **106** which is in line with slot **101** and the key **102** secured thereto. Shaft **96** is longitudinally movable with respect to miter gear **97** so that key **102** aligns with slot **106** and is urged thereinto by means of spring **105**. When this occurs, miter gear **97** rotates with shaft **96** to translate movement to lead screw **84'** and its accompanying traveling block **87'** to cause raising or lowering of front top **18'** depending on the direction of rotation. Shaft **96** is longitudinally movable between three positions shown by the two dotted positions B and C and the solid position A in FIG. **10**. These three positions correspond with the three positions of the earlier embodiment, namely engagement with lead screw **84'** alone, engagement with lead screw **88'** alone and engagement with lead screws **86'** and **88'** together for the tilting movement. Once the shaft **96** is manually moved into any of the three positions, turning of the hand crank **90** causes the desired movement.

It will thus be seen that we have provided a table having a split top with each of the top surfaces being adjustable in a raising and lowering position and the rear top being tiltable. This can be accomplished either automatically through electrical controls or manually through a hand crank. In practice we have found that the front section should move up and down a total of four inches, whereas the back section should have the capability of moving up and down through six inches. In addition, the rear top should have the capability of tilting upward 15° and downward 5°. In addition, the front section should have the capability of moving in and out horizontally through approximately six inches.

Our preferred embodiments of the present invention have been illustrated and described and it will be recognized that various modifications may be made without departing from the spirit and scope of the appended claims.

We claim:

1. An adjustable split top table for accommodating word processing equipment and the like comprising:

A. a base support for resting on the floor;

B. a main frame connected to the base support, said main frame including a pair of parallel and spaced members positioned along a longitudinal central axis of the table;

C. a first lead screw operably mounted to said main frame and positioned between said members and inclined forward at an angle on the order of 25° to the vertical;

D. a second lead screw operably mounted to said main frame and between said members and parallel to said first lead screw;

E. a third lead screw pivotally mounted to said main frame and positioned between said members;

F. a traveling block movably secured to each lead screw and a pair of arms upstanding therefrom;

G. table supporting means connected to each pair of arms, said supporting means including a pair of depending legs, each leg positioned in sliding engagement within a support bracket operably connected to the main frame and spaced outward from said spaced members;

H. a front table top mounted to a front bracket, said front bracket slidably mounted on horizontal leg extensions of the depending legs interconnected with the first lead screw;

I. a rear table top mounted to said supporting means interconnected with the second and third lead screws, respectively; and

J. drive means for driving said lead screws, said means capable of driving said first lead screw to raise and lower the first table top, of driving said third lead screw to tilt said rear table top and of driving said second and third lead screws to raise and lower said rear table top.

2. The table of claim **1**, said drive means including individual motors mounted to individual housings accommodating each of said lead screws.

3. The table of claim **2** including a control box mounted to said front table top, said control box including individual activation means to cause said tilting and raising or lowering of each table top and digital readouts associated with the raising and lowering activation means to display the location of each table top.

4. The table of claim **1**, said drive means comprising a manual driven shaft and a single housing accommodating said first, second and third lead screws, each of said lead screws terminating in a miter gear, said shaft including three miter gears spaced therealong, said shaft movable to engage the shaft miter gears and the lead screw miter gears between the positions set forth in paragraph J.

5. The table top of claim **4**, said shaft containing an elongated slot having three spring biased keys connected and spaced therein, each of said shaft miter gears having receiving slots for engagement by a respective key to cause rotation of said gear.

6. The table of claim **1**, said support brackets for said depending legs associated with the first and second lead screws being rigidly secured to the parallel and spaced members.

7. The table of claim **6**, said table supporting means associated with the second lead screw comprising a cross rod extending between said depending legs, said cross rod connected to an underside of said rear table top adjacent the front thereof, said pair of arms connecting to said cross rod midway of said depending legs.

8. The table of claim **7**, said table supporting means associated with the third lead screw comprising a cross rod extending between depending legs, said cross rod connected to an underside of said rear table along the midsection thereof, said pair of arms connecting to said underside rearward of the cross rod.

9. An adjustable split top table for accommodating word processing equipment and the like comprising:

A. a base support for resting on the floor;

B. a main frame connected to the base support, said main frame including a pair of parallel and spaced members positioned along a longitudinal central axis of the table;

C. a first lead screw operably mounted to said main frame and positioned between said members and inclined forward to an angle on the order of 25° to the vertical;

D. a second lead screw operably mounted to said main frame and positioned between said members and parallel to said first lead screw;

E. a third lead screw pivotally mounted to said main frame and positioned between said members;

F. a traveling block movably secured to each lead screw and a pair of arms upstanding therefrom;

G. table supporting means connected to each pair of arms, said supporting means including a pair of depending legs, each leg positioned in sliding engagement within a support bracket operably connected to the main frame and spaced outward from said spaced members;

H. a front table top mounted to a front bracket, said front bracket slidably mounted on horizontal leg extensions of the depending legs interconnected with the first lead screw;

I. a rear table top mounted to said supporting means interconnected with the second and third lead screws, respectively;

J. drive means for driving said lead screws, said means capable of driving said first lead screw to raise and lower the first table top, of driving said third lead screw to tilt said rear table top and of driving said second and third lead screws to raise and lower said rear table top, said drive means including individual motors mounted to individual housings accommodating each of said lead screws; and

K. each housing including an upper bracket positioned atop said housing, a bottom plate, a supporting bracket connected to the bottom plate and positioned within the housing, a lead screw extending between said bracket and operable within a flange bearing associated with said upper bracket and a thrust bearing and flange bearing associated with the supporting bracket, a flexible coupling connectable between said lead screw and a motor shaft, a gear box and motor connectable to said motor shaft and said bottom plate, said traveling block positioned within the housing for movement by the lead screw and said arms extending through slots in said upper bracket.

* * * * *

UNITED STATES PATENT AND TRADEMARK OFFICE

CERTIFICATE OF CORRECTION

PATENT NO. : 4,440,096

DATED : April 3, 1984

INVENTOR(S) : Thomas E. Rice et al.

It is certified that error appears in the above-identified patent and that said Letters Patent are hereby corrected as shown below:

Column 1 Line 68 "screw" should read --screws--.

Column 2 Line 60 "slop" should read --slope--.

Column 4 Line 46 "head" should read --hand--.

Claim 1 - Column 5 Line 55 After "and" (first occurrence) insert --positioned--.

Signed and Sealed this

Twenty-fifth Day of *December 1984*

[SEAL]

Attest:

Attesting Officer

GERALD J. MOSSINGHOFF

Commissioner of Patents and Trademarks