US005408940A

United States Patent [19]

Winchell

[11] Patent Number: 5,408,940

[45] Date of Patent: Apr. 25, 1995

[54] ADJUSTABLE HEIGHT WORK SURFACE WTIH RACK AND PINION ARRANGEMENTS

[76] Inventor: Paul W. Winchell, 114 Academy Rd., North Andover, Mass. 01834

[21] Appl. No.: 904,224

[22] Filed: Jun. 25, 1992

[51] Int. Cl.[6] A47B 9/06

[52] U.S. Cl. 108/147; 108/10

[58] Field of Search 108/5, 20, 21, 33, 10, 108/92, 96, 106, 108, 143, 144, 146, 147; 312/208.1, 223.1, 223.2, 223.3, 351; 211/175, 207, 208, 209; 248/188.2, 188.4, 188.5, 188.3

[56] References Cited

U.S. PATENT DOCUMENTS

1,915,802	6/1933	Roshnell	108/10
1,927,598	9/1933	Schlichter	254/7
3,140,559	7/1964	Grow et al.	108/10 X
3,851,854	12/1974	Roybai	254/7 C
4,294,332	10/1981	Ready	182/141
4,498,556	2/1985	Garton	182/19
4,590,865	5/1986	Rütsche et al.	108/147 X
4,600,085	7/1986	Gagnon	187/24
4,752,102	6/1988	Rasmussen	108/147 X
4,944,366	7/1990	Pryor et al.	182/141
4,967,733	11/1990	Rousseau	182/13
4,981,085	1/1991	Watt	108/147

FOREIGN PATENT DOCUMENTS

9043798	2/1990	Australia	108/147
3027374	2/1982	Germany	108/147
3314388	5/1984	Germany	108/147

Primary Examiner—Clifford D. Crowder
Assistant Examiner—Ismael Izaguirre
Attorney, Agent, or Firm—Pearson & Pearson

[57] ABSTRACT

Apparatus providing an adjustable height work surface. A work table is cantilevered from posts supported for vertical motion inside columns from a base. A drive connected between the work table and the base changes the height of the work table and is located between the columns and posts. Each post carries a rack that engages with a pinion supported by a column for rotation about a common axis. A rigid shaft interconnects two pinions and prevents relative pinion rotation. A stabilizing structure in each column interacts with the post to maintain engagement between the rack and pinion structure and maintains the work table in a horizontal position during adjustment and use.

4 Claims, 3 Drawing Sheets

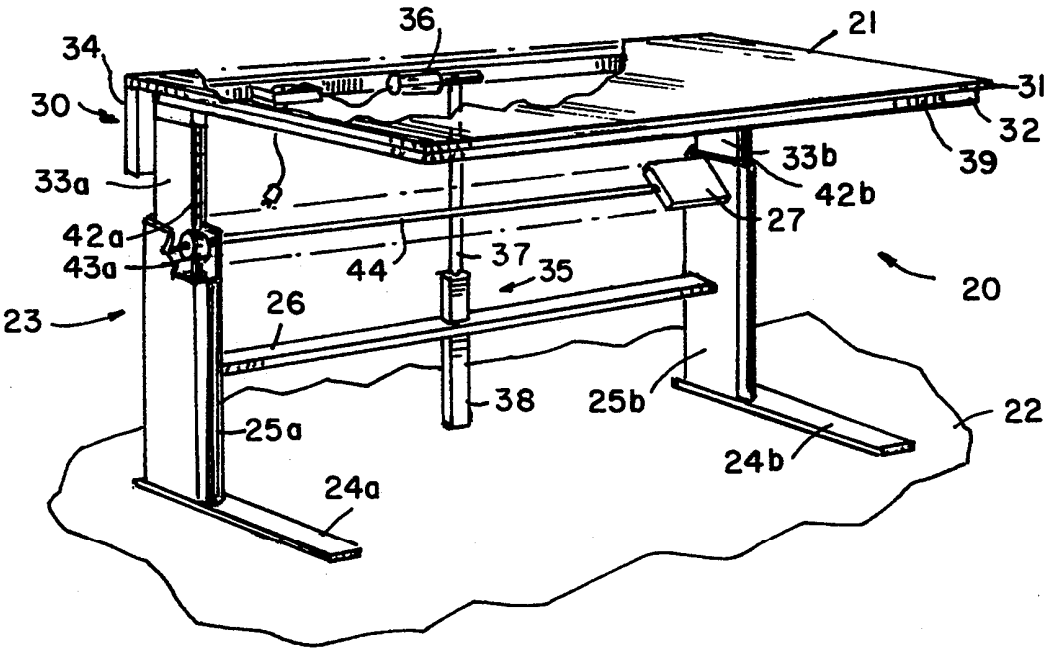

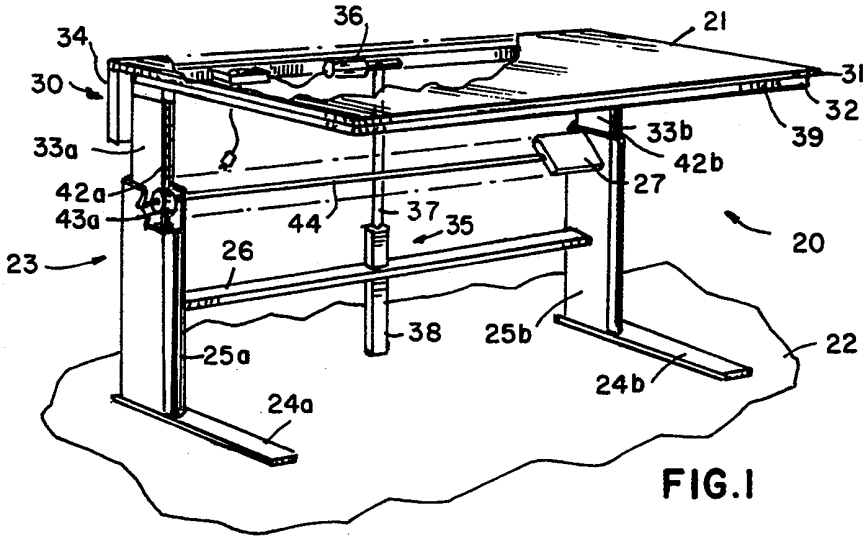
36
21
34
30
31
32
39
33a
33b
42b
27
42a
43a
44
37
35
20
23
26
38
25b
22
25a
24b
24a

FIG.1

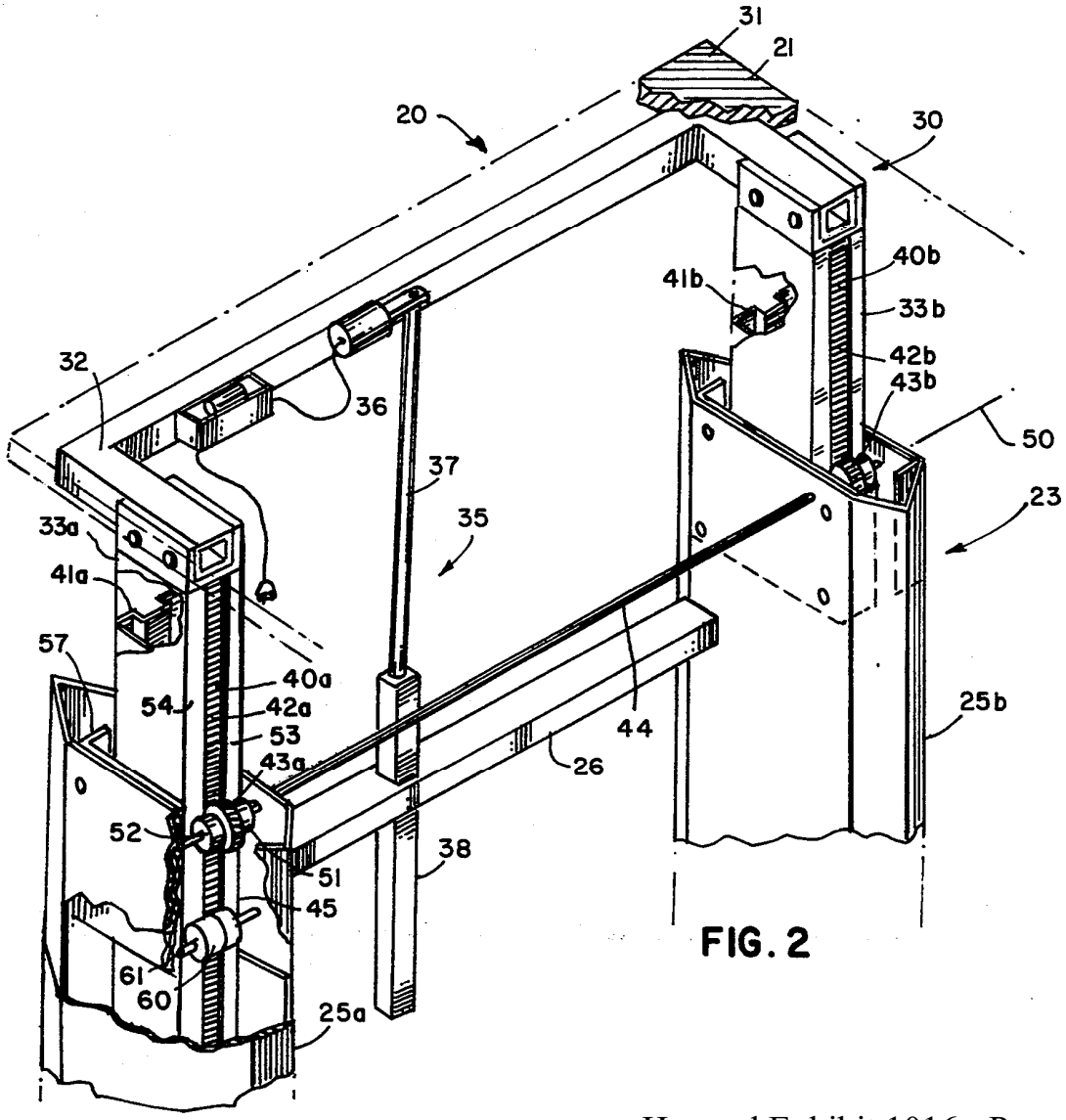
31
21
20
30
40b
41b
33b
42b
43b
32
36
50
37
23
35
33a
41a
57
40a
54
42a
53
43a
44
25b
26
52
38
51
45
61
60
25a

FIG. 2

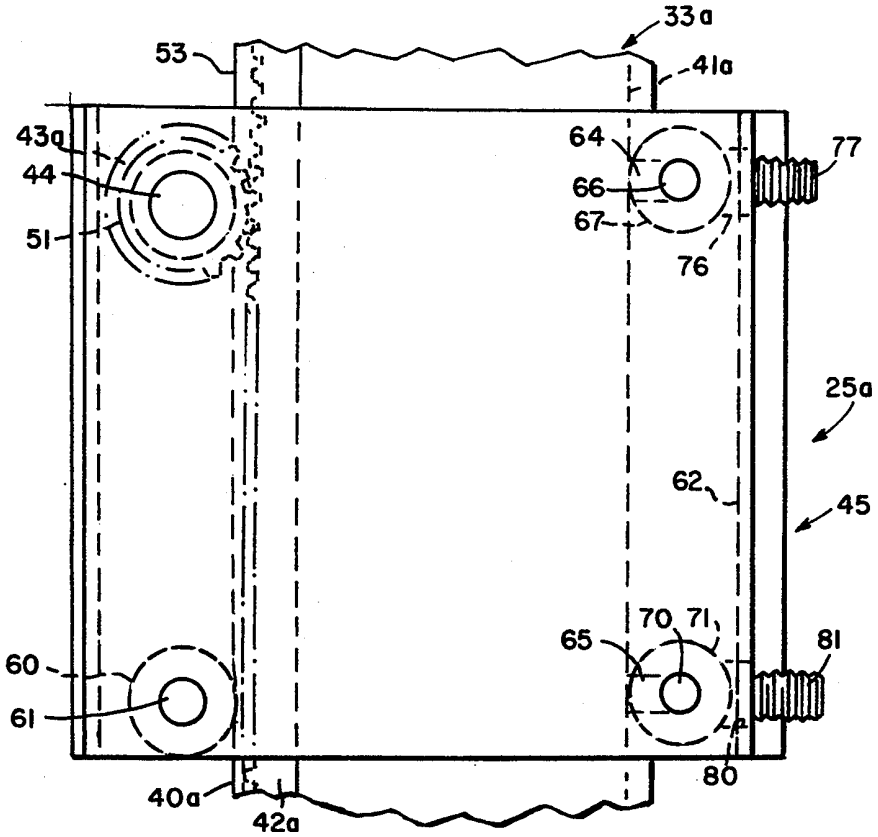
33a
53
41a
43a
44
51
64
66
67
76
77
25a
62
45
60
61
65
70
71
81
80
40a
42a

FIG.3

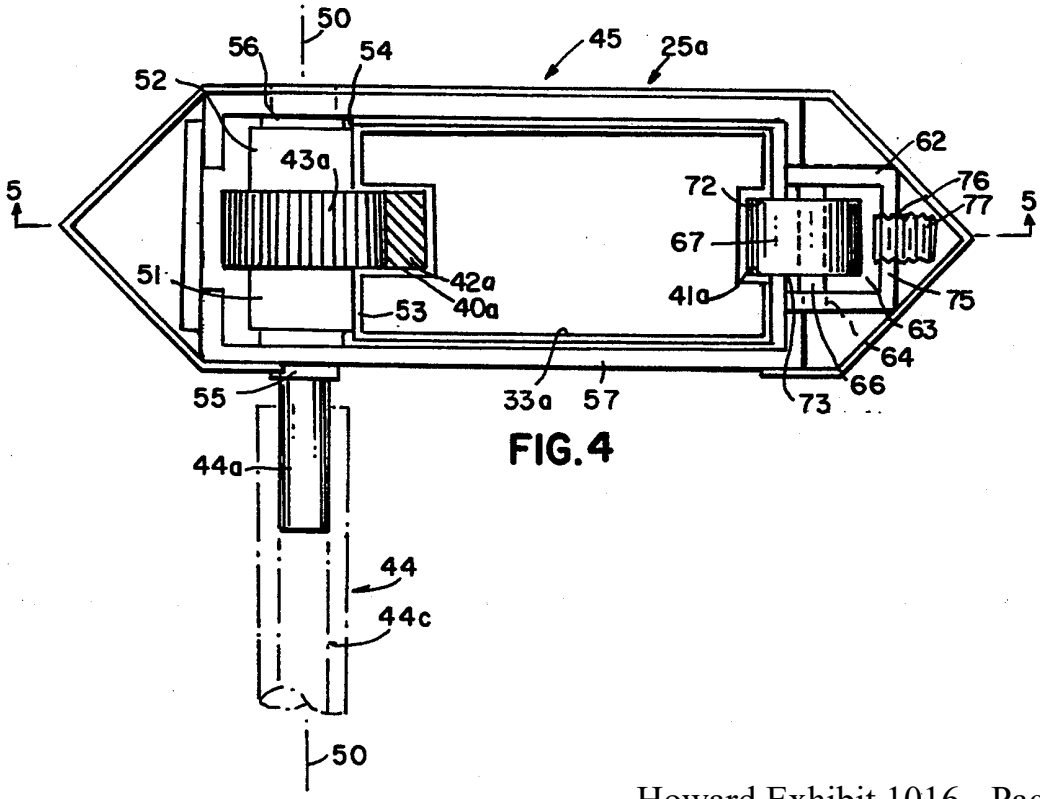
50
56
54
45
25a
52
43a
62
5
72
76
77
5
67
51
42a
41a
75
53
40a
63
64
66
55
33a
57
73
44a
44
44c
50

FIG.4

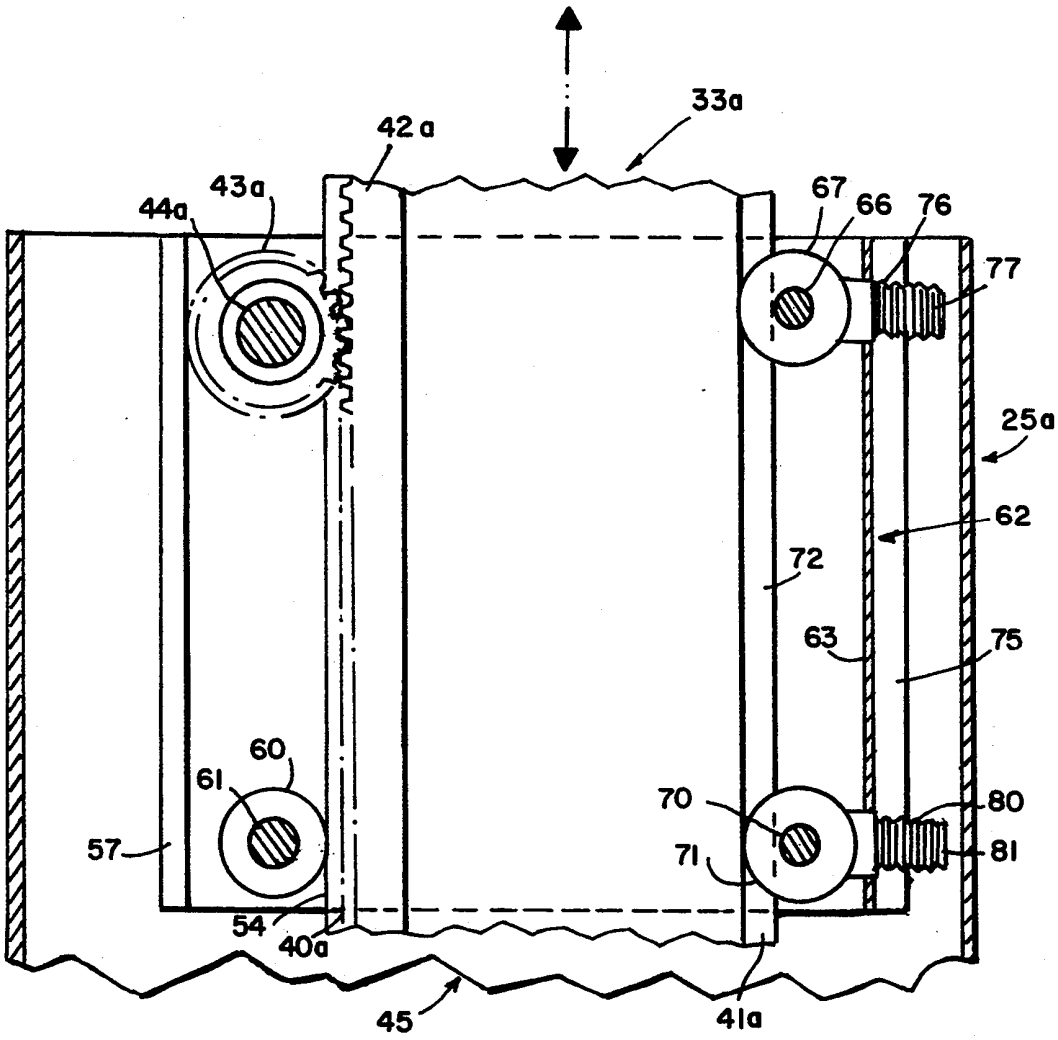
33a
42a
43a
44a
67
66
76
77
25a
62
72
63
75
60
61
57
70
71
80
81
54
40a
45
41a

FIG. 5

ADJUSTABLE HEIGHT WORK SURFACE WTIH RACK AND PINION ARRANGEMENTS

BACKGROUND OF THE INVENTION

1. Field of the Invention

This invention generally relates to furniture such as work tables with work surfaces and more specifically to methods and apparatus for adjusting the height of such work surfaces.

2. Description of Related Art

Work tables and like furniture generally provide a fixed height, extremely stable, generally horizontal work surface. In many embodiments such work tables are formed with a horizontal deck assembly or work table supported by upright supports at each of the four corners. More recently, such work tables have been constructed with a pedestal base that supports the table at a rear portion to cantilever the deck assembly forward from the base. This construction eliminates the front upright supports and provides clear knee room at the front, or working area, of the worktable.

Generally corner-supported and cantilevered fixed work tables are supported from below the work surfaces. The plane of the work surface and extensions thereof do not intersect any portion of the work table or its supporting structure. Therefore the work table does not, by itself, limit the size of any item that it supports.

Fixed height work tables are characterized by a fixed working surface height normally set for an average individual in either a sitting or standing posture. Consequently, the work table height is not optimized or ergonomically correct for any specific individual who may be using the work table. In one posture, for example a sitting posture, the work table height will not be optimized for that person in any other posture. If an individual stands, he or she will be forced to stoop. Further, even if the work table height is optimized for one individual in one posture, it probably is not ergonomically correct for other individuals working at the same table even with the same posture. To overcome these problems it has been proposed to provide work tables and other apparatus with adjustable height work surfaces.

The following patents disclose apparatus in which all the structure for adjusting the work surface height lies below the work table or work surface.

1,927,598	(1933)	Schlichter
3,851,854	(1974)	Roybal
4,944,366	(1990)	Pryor et al

U.S. Pat. No. 1,927,598 (Schlichter) discloses a portable elevating table that comprises a stationary lower plate, a stationary middle plate and a vertically adjustable upper plate. Upright supports in the form of columns at each corner of the table extend between the lower and middle plates and contain means for vertically adjusting the upper plate with respect to the middle plate. A vertical screw within each column attaches to the upper plate and extends to engage a threaded spiral gear located at the top of a corresponding column. A manual operating mechanism rotates a first shaft and connected spiral gear nuts. A gear and chain mechanism interconnects the first shaft with a parallel second shaft with spiral gear nuts. As the operating mechanism rotates, all the spiral gear nuts operate together thereby moving the upper place vertically relative to the middle and lower plates.

U.S. Pat. No. 3,851,854 (Roybal) discloses a scaffold having a stationary frame for supporting vertically movable intermediate and upper frames. The intermediate frame carries vertically positioned, rotatable sleeves at each corner that extend above and below the plane of the intermediate frame. A lower threaded portion of each sleeve screws into a leg that extends vertically from the stationary frame. Each upper sleeve portion has an opposite thread to engage a correspondingly threaded leg that depends from each corner of the upper frame. A common motor drive rotates the sleeves in synchronism to adjust the vertical position of the intermediate frame with respect to the stationary frame and, simultaneously, the vertical position of the upper frame with respect to the intermediate frame.

U.S. Pat. No. 4,944,366 discloses a scaffolding with a rectangular lower frame. Vertically positioned, pneumatically operated cylinders at each corner carry and vertically position an upper work support frame.

Each of the foregoing patents discloses an apparatus for providing an unobstructed adjustable height work surface with all the operating mechanism below the work surface. However, none of these structures is particularly adapted for providing furniture with adjustable height work surfaces. Each requires a support at each corner to provide stability and to provide even movement while the work surface remains horizontal. Thus, this apparatus is not adapted to cantilevered structures. The mechanisms and supports can become bulky and interfere with clearance under the table Moreover these mechanisms are difficult to implement given problems in synchronizing the relative motions at each corner and can become expensive.

The following patents disclose other apparatus that provides work surface adjustment:

4,294,332	(1981)	Ready
4,498,556	(1985)	Garton
4,600,085	(1986)	Gagnon et al
4,967,733	(1990)	Rousseau

U.S. Pat. No. 4,294,332 (Ready) discloses a scaffold comprising a pair of parallel towers. Each tower comprises spaced, vertical rails for supporting vertical gear racks. A self-elevating carriage mounts between the rails. The carriage has a motorized rotatable shaft with two pinion gears for engaging the respective gear racks on the vertical rails thereby to move the carriage vertically on the tower.

U.S. Pat. No. 4,498,556 (Garton) discloses a vertically adjustable platform. The apparatus includes a multi-section, centrally disposed mast with a rack gear. A motor driven pinion engages the rack thereby to adjust the vertical position of the platform with respect to the mast.

U.S. Pat. No. 4,600,085 (Gagnon et al) discloses a platform lift mechanism having four upright telescoping segments. The lowermost first segment is secured to the floor. The uppermost fourth segment is secured to the base of the platform to be lifted. A linear drive comprising an elongated screw and rotatable nut assembly moves the segments relative to each other to position the platform vertically.

U.S. Pat. No. 4,967,733 (Rousseau) discloses a scaffold-like lifting carriage comprising four corner posts,

each having a gear rack, and a rectangular platform mounted between the corner posts. The platform has a shaft on each side, each shaft connecting two gear pinions that engage the corner post racks. A motor on the platform rotates the shafts by means of a power chain. As the shafts rotate, the pinion gears advance over the corresponding racks thereby adjusting the vertical position of the platform.

Although each of the foregoing patents discloses apparatus for adjusting the height of a horizontal work surface, each requires portions of the apparatus to extend above the work surface. Moreover, the Schlichter, Roybal, Pryor et al, Gagnon and Rousseau patents disclose structures that support the platform at four different positions. The apparatus in the Ready and Garton patents disclose a cantilever-like work surface, but the support structure extends above the work surface. Moreover, the mechanisms in all of these patents are not constrained by the applications to sizes that can be readily adapted to furniture applications. The Schlichter, Ready, Garton and Rousseau disclose mechanisms in which a motor drive rotates a pinion along a rack to adjust the height. Consequently the rack and pinion must be sized to support the full weight of any load applied to the work surface. For furniture design loads a similar structure will become bulky and unpleasant looking, even with shrouds for covering the mechanisms.

SUMMARY

Therefore it is an object of this invention to provide a method and apparatus for adjusting the position of a work surface.

Another object of this invention is to provide a method and apparatus for providing a stable, adjustable work surface.

Another object of this invention is to provide a stable, cantilevered work surface.

Yet still another object of this invention is to provide an adjustable work surface that is not obstructed by any of the mechanisms for adjusting the position of the work surface.

Yet still another object of this invention is to provide a stable, cantilevered, adjustable height surface that is unobstructed by any mechanism associated with the apparatus.

In accordance with this invention apparatus for providing an adjustable work surface includes a base having a plurality of first supports and a planar work surface structure. A plurality of second supports from the planar work surface structure align with the first supports to enable motion between the work surface and the base. A drive affixed to the base and work surface adjusts the spacing therebetween. Motion converters at each of the aligned first and second supports converts motion between the first and second supports in one form into a second motion form. A link interconnects each of the motion converters to prevent unequal increments of the second motion in response to the first motions.

In accordance with another aspect of this invention, an article of furniture having a variable height work surface includes a base with a pair of spaced vertical first supports. A horizontal work table has a pair of spaced depending second supports that align with corresponding ones of the first supports. A drive interconnects the base and the work table for adjusting the vertical position of the work table with respect to the base and thereby produces relative linear motion between each aligned first and second supports. A pair of rack and pinion mechanisms convert the relative linear motion into angular motion. The pinions rotate about a common axis. A rigid linking structure is affixed to each of the pinions and lies along the common axis. This structure prevents relative motion of the pinions.

In accordance with still another aspect of this invention, the height of a work table with respect to a supporting surface is adjusted by applying a displacement force between a base and a planar work surface at a position intermediate first and second supports. This height adjustment produces relative linear motion between the first and second supports that is converted to angular motion. The angular motion is then synchronized at each of the aligned first and second supports for preventing unequal angular displacement.

BRIEF DESCRIPTION OF THE DRAWINGS

The appended claims particularly point out and distinctly claim the subject matter of this invention. The various objects, advantages and novel features of this invention will be more fully apparent from a reading of the following detailed description in conjunction with the accompanying drawings in which like reference numerals refer to like parts, and in which:

FIG. **1** is a perspective view of an article of furniture that incorporates an adjustable height work surface in accordance with this invention;

FIG. **2** is a perspective view of portions of the article of furniture in FIG. **1** that depicts details of this invention;

FIG. **3** is a side view that depicts a portion of the article of furniture shown in FIG. **1**;

FIG. **4** is a top view of the portion of the article of furniture shown in FIG. **3**; and

FIG. **5** is a section taken along lines **5—5** in FIG. **4**.

DESCRIPTION OF ILLUSTRATIVE EMBODIMENTS

FIG. **1** discloses an article of furniture constructed in accordance with this invention and configured as a work table **20** that provides a horizontal work surface **21**. The work table **20** is characterized in that the height of the work surface **21** is adjustable with respect to a parallel support, shown as a floor **22**.

The work table **20** includes, as a first major assembly, a pedestal or base **23** with horizontal legs **24*a*** that rest on the floor **22**. Left and right columns **25*a*** and **25*b*** extend vertically from the horizontal legs **24*a*** and **24*b***. As shown in FIG. **1**, each of the columns **25*a*** and **25*b*** attaches to its respective horizonal leg **24*a*** and **24*b*** at a back or rear portion. Each of the columns **25*a*** and **25*b*** is open at the top. The columns **25*a*** and **25*b*** collectively constitute spaced first supports that mount on the support surface or floor **22**. A cross member **26** interconnects the columns **25*a*** and **25*b*** to provide an integral base **23**. A shroud **27**, partially broken away in FIG. **1**, covers a certain portions of the operating mechanism.

A deck assembly or work table unit **30** constitutes a second major assembly of the work table **20**. The work table unit includes a planar horizontal table top **31** and a supporting open frame **32** below the table top **31**. A left post **33*a*** and right post **33*b*** depend vertically from the frame **32**. Each of the posts **33*a*** and **33*b*** is aligned with a corresponding one of the columns **25*a*** and **25*b***. Each of the posts **33*a*** and **33*b*** constitutes a second support that is aligned with a corresponding column. In this

specific embodiment, the posts **33***a* and **33***b* telescope or nest in the columns **25***a* and **25***b* respectively. The deck assembly **30** includes an optional back frame **34**. The back frame **34** can serve as a support for ancillary items, such as shelving, when desired for a particular application.

Still referring to FIG. **1**, a linear drive unit **35** constitutes a third major assembly and provides the displacement function. The unit **35** is located intermediate the columns **25***a* and **25***b* and normally will be centered on the work table **31** at the back edge thereof. As particularly depicted in FIG. **1**, the linear drive unit **35** includes a reversible, right angle drive electric motor **36** for rotating a vertically disposed threaded shaft **37**. A receptacle **38** connects to the cross member **26** so that rotation of the shaft **37** causes the shaft to move vertically with respect to the receptacle **38** and thereby produce vertical motion of the work table unit **30** relative to the base **23**. A switching assembly **39** controls the operation of the motor **36**. The wiring of this electrical motor is not specifically disclosed as such drive motors and controls and electrically operated linear drive units are well known in the art. Moreover, the drive unit can comprise alternates to an electric reversible motor and related components, such as manually operated cranks or pneumatically-driven units.

As shown generally in FIG. **1** and in slightly more detail in FIG. **2**, the work table **20** includes a mechanism for maintaining the work surface **21** in a horizontal plane during height adjustment and during use. Each of the posts **33***a* and **33***b* has vertically oriented forward channels **40***a* and **40***b* and vertically oriented rear channels **41***a* and **41***b*. The front channels **40***a* and **40***b* carry racks **42***a* and **42***b* fixed to the posts **33***a* and **33***b* respectively.

As the posts **33***a* and **33***b* move vertically, the racks **42***a* and **42***b* engage pinions **43***a* and **43***b* on the columns **25***a* and **25***b* respectively. Each rack and pinion assembly, such as rack **42***a* and pinion **43***a*, converts linear motion between a post and column, such as the post **33***a* and column **25***a*, as a first motion into angular motion, as a second motion.

A rigid link in the form of a rigid shaft shaft structure **44** is affixed to both the pinions **43***a* and **43***b*. Consequently, within the elastic limits of the shaft structure **44**, it is not possible to rotate the pinions **43***a* and **43***b* relative to each other. The spaced rack and pinion structures therefore prevent the posts **33***a* and **33***b* from displacing unequal amounts. The post **33***a* and **33***b* must advance in synchronism. This assures that the work surface **21** remains horizontal during height adjustment.

If an off-center load is placed at the right edge of the work surface **21**, as shown in FIG. **1**, the load produces a clockwise moment about a fulcrum at the drive unit **35**. The natural tendency is to lower the post **33***a* and raise the post **33***b*. However, lowering the post **33***b* requires clockwise motion of the pinion **43***b* when viewed from the left in FIGS. **1** and **2**, while raising the post **33***a* requires clockwise rotation of the pinion **43***b*. However, the shaft structure **44** prevents this relative displacement of the pinions **43***a* and **43***b*. Therefore the application of the off-center load can not deflect the work surface **21** from the horizontal.

As will now be apparent, the work table **20** as depicted in FIGS. **1** and **2** provides an adjustable height work surface **21**. This work surface **21** is stable during adjustment and during use, even though the work surface **21** is cantilevered from the post **33***a* and columns **25***a* to provide clear knee room below the work surface **21**. The operating mechanisms do not obstruct the work surface **21** and do not impinge in the knee room area.

In accordance with another aspect of this invention, the drive mechanism **35** produces all the lift and generally carries all the load. In prior rack and pinion assembly driver, a pinion drives the rack to displace the load and must be sized accordingly. In accordance with this invention the pinions are merely followers. Loading on the pinions and interconnecting shaft occurs only if there is some imbalance in the forces that tends to produce relative displacement of the pinions **43***a* and **43***b*. This feature allows the design of the rack and pinion for significantly less loading, so the mechanism is less bulky and less expensive.

FIGS. **3** through **5** depict one embodiment of a relatively simple and inexpensive mechanism **45** for providing the advantages of this invention. One such mechanism **45** is located at the top of each of the columns **25***a* and **25***b* in FIG. **1**. As these mechanisms, however, are mirror images of each other, FIGS. **3** through **5** depict the mechanism **45** associated with column **25***a* and post **33***a* generally viewed from the center of the table.

FIG. **4** most clearly depicts the details of the rack **42***a* and pinion **43***a*. The pinion **43***a* rotates with a shaft assembly **44***a* that lies along a common shaft axis **50**. The rack **42***a* is recessed in the front channel **40***a* of the post **33***a* and the pinion **43***a* has an appropriate radius whereby the pinion **43***a* and rack **40***a* engage. The shaft **44***a* additionally supports rollers **51** and **52** on opposite sides of the pinion **43***a*. These rollers engage front surfaces **53** and **54** of the post **33***a* on either side of the front channel **40***a*. This establishes a constant compression loading between the gear teeth on the rack **40***a* and pinion **43***a* to prevent binding during operation. Bushings **55** and **56** located in a frame **57** support the shaft **44***a*.

FIG. **4** further depicts a shaft extension **44***c* that overlies and is fixed to the shaft **44***a* thereby to complete the shaft assembly **44**. The shaft extension **44***c*, at its other end, connects to a corresponding shaft from the pinion **43***b* shown in FIG. **2**.

The remainder of the mechanism **45** shown in FIGS. **3** through **5** stabilizes the structure to provide a cantilevered work surface that does not deflect under load and additionally is stable in the horizontal plane. This mechanism **45** provides a four-point support between the column **25***a* and the post **33** to provide this stability. Moreover, the mechanism spaces the post **33***a* from the column **25***a* to eliminate any contact except at the four points.

Referring to FIGS. **3** and **5**, a roller **60** having the same diameter as the rollers **51** and **52** rides on a shaft **61** disposed vertically under the shaft **44** and mounted to the frame **57**. The roller **60** extends along the shaft **61** over a length corresponding to the total length of the rollers **51** and **52** and intermediate pinion **43***a*. Consequently the roller **61** engages both the end surfaces **53** and **54** of the post **33***a*. The rollers **51**, **52** and **61** therefore define a vertical plane in the orientation shown in FIGS. **3** and **5** for supporting the post **33***a*.

FIGS. **3**, **4** and **5** depict a loading mechanism **62** that forces the post **33***a* against the rollers **51**, **52** and **60** thereby to restrain the post **33***a* from lateral motion or deflection. The loading mechanism **62** includes a U-shaped member **63** that includes upper and lower slots aligned vertically with the centers of the shaft **44** and shaft **61** respectively. The upper slot **64** supports an

upper shaft **65** for rotation with an upper roller **67**. The lower slot **65** carries a lower shaft **70** and lower roller **71**. Each of the rollers **67** and **71** has a width that corresponds to the width of the rear channel **41***a*. Consequently when the inner edges of the roller **71** are disposed in the channel **41***a*, they engage side wall **72** and **73** of the rear channel **41***a* to prevent lateral displacement.

A U-shaped frame member **75** attached to the main frame **57** captures the U-shaped channel **63**. An upper threaded aperture **76** through the frame **75** is aligned with the shaft **66** and receives and adjusting screw **77** that bears against the member **63**. Similarly a lower threaded aperture **80** aligned with the shaft **70** receives an adjusting screw **81** that bears against the member **63**. As will now be apparent, once the mechanism is assembled, the adjusting screws **77** and **81** establish forces that orient the member **63** and position the rollers **67** and **71** to produce lateral forces against an end wall in the rear channel **41***a*. As these forces are applied by rollers **67** and **71**, the post **33***a* is free to move vertically in the column **24***a*. However, the post **33***a* can not move laterally in the column **25***a*. Moreover, this loading by the mechanism **62** does not impact the load between the rack **42** and pinion **43***a* because the rollers **51**, **52** and **60** provide a fixed spacing between the rack **42***a* and the pinion **43***a*.

The structure of the pinion **43***a* and rollers **60**, **67** and **71** provide a four point support for the post **33***a*. Loading on the cantilevered table tends to produce a counterclockwise moment of the post **33***a* about the pinion **43***a*. However, the roller **71** produces a clockwise offsetting moment so the post **33***a* does not deflect. Stated alternatively, the rollers **51** and **52** and the rollers **60**, **67** and **71** constitute one embodiment of first and second pluralities of guides intermediate each pair of the first and second supports that stabilizes the horizontal position of the second support or post **33***a* or **33***b* within the first support or column **25***a* or **25***b* and thereby stabilizes the work table **20** with respect to the base **23**.

This stabilizing mechanism is readily adjusted. It introduces minimum friction because the rollers all provide point contact with the post **33***a*. However other approaches can also be used. For example, the adjustment mechanism **62** might be replaced with a solid glide bar of low friction that would ride in the rear channel **41***a*. One might also eliminate the lower roller **60** and shaft **61** thereby to provide three-point support. Any of these alternatives might be satisfactory for certain applications while still providing the stable adjustable work surface that is disclosed in FIGS. **1** through **6**.

This invention has been disclosed in terms of certain embodiments. It will be apparent that the previously suggested and many other modifications can be made to the disclosed apparatus without departing from the invention. Therefore, it is the intent of the appended claims to cover all such variations and modifications as come within the true spirit and scope of this invention.

What is claimed as new and desired to be secured by Letters Patent of the United States is:

1. An article of furniture comprising:

a) a base with a pair of hollow, spaced, vertical first supports that each terminate at a free end thereof and that each have a substantially constant cross-section throughout the length thereof,

b) a pair of spaced depending second supports that align with and nest in corresponding ones of said first supports,

c) a work table cantilevered from said pair of second supports,

d) a power drive interconnecting said base and said second supports for adjusting the vertical position of said work table with respect to said base thereby producing relative linear motion between said first and second supports,

e) a rack at each of corresponding sides of said second supports, portions of said racks coextensive with nested portions of said second supports being located inside said first supports,

f) a pinion mounted inside and supported by each of said first supports proximate the free end thereof for engaging a corresponding one of said racks whereby linear motion of each of said second supports rotates the corresponding pinion in the corresponding first support, each of said pinions lying on a common axis,

g) a rigid link supported by said first supports and fixed to each of said pinions for lying along the common axis thereby to prevent said pinions from rotating relative to each other, said rigid link being adapted for rotation with said pinions relative to said first supports,

h) first guide means intermediate nested ones of said first and second supports for spacing said corresponding ones of said first and second supports, and

i) second guide means intermediate nested ones of said first and second supports for spacing said corresponding ones of said first and second supports, said second guide means being spaced from said first guide means whereby said first and second guide means stabilize the relative positions of said base and said work table.

2. An article of furniture as recited in claim **1** wherein each said second support includes a post with a rear elongated channel formed therein and wherein each of said spaced guide means additionally comprises glides supported by said first supports for engaging said rear channel thereby to maintain the engagement of said rack and pinion during relative motion between said first support and post.

3. An article of furniture as recited in claim **2** characterized by having a front and back portion wherein each of said first and second supports is positioned adjacent the back portion and said drive means interconnects said base and said work table at the back portion thereof intermediate said pairs of first and second supports, each of said glide means including a roller for interacting with said corresponding rear channel to stabilize the horizontal position of said cantilevered work table and adjustment means for positioning each said roller with respect to said first and second supports.

4. An article of furniture as recited in claim **3** wherein said drive means comprises a linear drive means for displacing said work table taken from the group of linear drive means consisting of manually operated, electrically operated and pneumatically operated linear drive means.

* * * * *