US006595144B1

(12) **United States Patent**
Doyle

(10) **Patent No.: US 6,595,144 B1**
(45) **Date of Patent: Jul. 22, 2003**

(54) **ADJUSTABLE LEG ASSEMBLY**

(75) Inventor: **James E. Doyle**, Grandville, MI (US)

(73) Assignee: **Suspa Incorporated**, Grand Rapids, MI (US)

(*) Notice: Subject to any disclaimer, the term of this patent is extended or adjusted under 35 U.S.C. 154(b) by 0 days.

(21) Appl. No.: **09/573,065**

(22) Filed: **May 17, 2000**

(51) **Int. Cl.**[7] **A47B 9/00**
(52) **U.S. Cl.** **108/147**; 248/188.4
(58) **Field of Search** 108/20, 147, 144.11, 108/144.19; 248/188.4

(56) **References Cited**

U.S. PATENT DOCUMENTS

3,458,788	A		7/1969	Ljung
3,896,744	A		7/1975	Goebl
4,352,479	A		10/1982	Chapman, Jr.
4,440,096	A		4/1984	Rice et al.
4,456,212	A		6/1984	Raftery
4,502,393	A		3/1985	Kaiser
4,593,874	A		6/1986	Dunagan
4,604,955	A		8/1986	Fleischer et al.
4,619,208	A		10/1986	Kurrasch
4,627,364	A	*	12/1986	Klein et al. 108/147
4,651,652	A		3/1987	Wyckoff
4,655,426	A		4/1987	von Dulong et al.
4,667,605	A		5/1987	Bastian
4,711,184	A		12/1987	Wallin et al.
4,766,422	A		8/1988	Wolters et al.
4,852,500	A		8/1989	Ryberg et al.
4,910,816	A		3/1990	Lansing
4,927,127	A		5/1990	Lock
4,981,085	A		1/1991	Watt
5,088,421	A		2/1992	Beckstead
5,101,736	A		4/1992	Bommarito et al.
5,174,223	A		12/1992	Nagy et al.
5,224,429	A		7/1993	Borgman et al.
5,243,921	A		9/1993	Kruse et al.
5,259,326	A		11/1993	Borgman et al.
5,282,593	A		2/1994	Fast
5,285,733	A		2/1994	Waibel
5,289,782	A		3/1994	Rizzi et al.
5,322,025	A		6/1994	Sherman et al.
5,323,695	A		6/1994	Borgman et al.
5,337,678	A	*	8/1994	Grout 108/147
5,400,721	A		3/1995	Greene
5,443,017	A		8/1995	Wacker et al.
5,447,099	A		9/1995	Adams et al.
5,479,852	A		1/1996	Lloyd
5,495,811	A		3/1996	Carson et al.
5,553,550	A		9/1996	Doyle
5,598,788	A		2/1997	Jonker
5,601,037	A	*	2/1997	Meyer et al. 108/147
5,601,348	A		2/1997	Minkovski
5,685,510	A		11/1997	Frankish
5,890,438	A		4/1999	Frankish
5,918,505	A		7/1999	Jensen
5,941,182	A	*	8/1999	Greene 108/147

* cited by examiner

Primary Examiner—Lanna Mai
Assistant Examiner—Jerry A. Anderson
(74) *Attorney, Agent, or Firm*—Price, Heneveld, Cooper, DeWitt & Litton

(57) **ABSTRACT**

An adjustable leg assembly includes a base leg which receives a pair of spaced, multiple section slides, each having one end coupled to a motor actuator attached to the underside of a work surface and an opposite end coupled to the base leg. The slides provide lateral strength for the motion between raised, lowered, and intermediate adjustable positions and provide a trim cover for concealing the drive mechanism employed for adjusting the table height. A pair of trim strips are mounted to an actuator on the underside of the table surface to extend in the areas between the slides for concealing the actuator mechanism which extends to the base leg. In a still further preferred embodiment, the base leg is an extrusion having a plurality of mounting apertures formed therein and trim panel receiving slots such that the appearance of the adjustable leg assembly can be modified for a given work environment and décor.

21 Claims, 7 Drawing Sheets

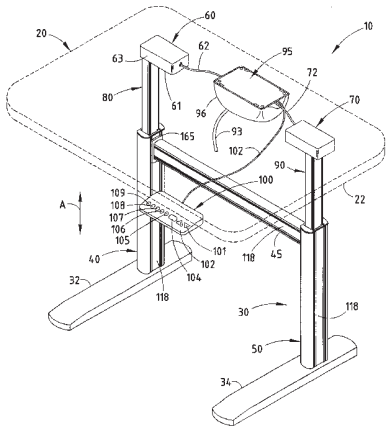

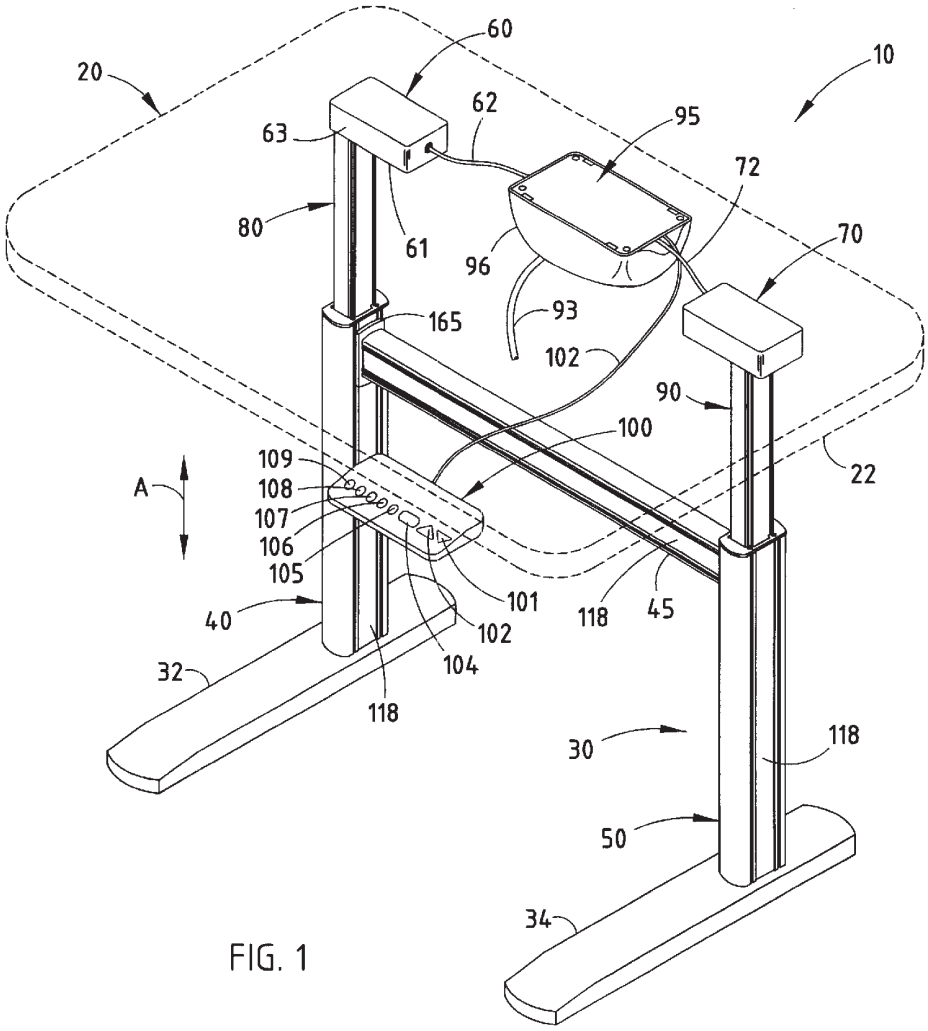
60
10
20
62
95
63
72
80
61
96
70
165
93
102
90
100
22
109
A
108
107
106
105
101
118
45
40
102
104
32
118
30
118
50
34

FIG. 1

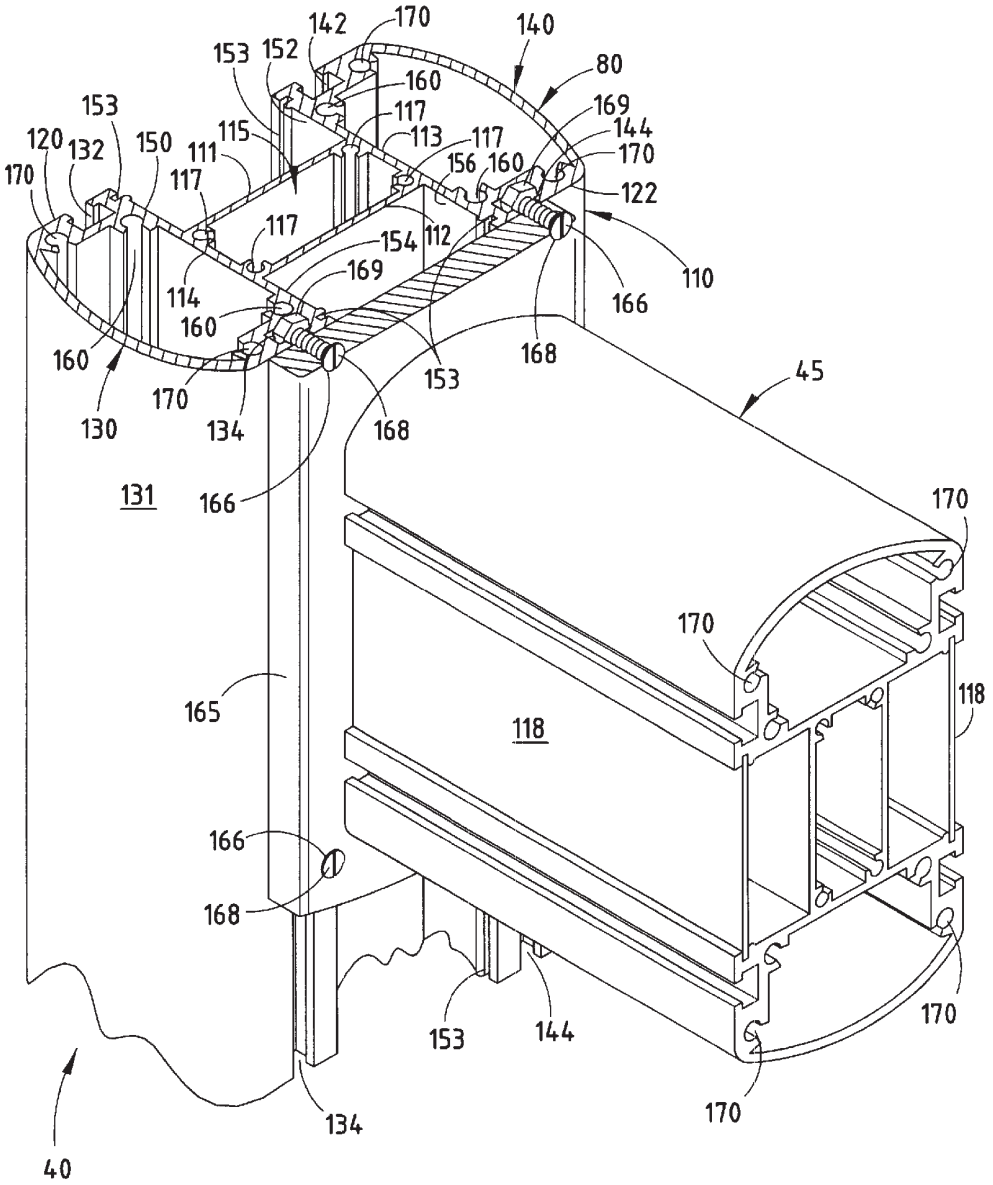
142
170
140
153
152
80
160
153
117
169
144
120
132
150
115
113
117
170
111
156
160
170
117
122
117
154
112
110
114
169
166
160
168
160
153
45
170
130
134
168
131
166
170
170
165
118
118
166
168
153
144
170
170
134
40

FIG. 2

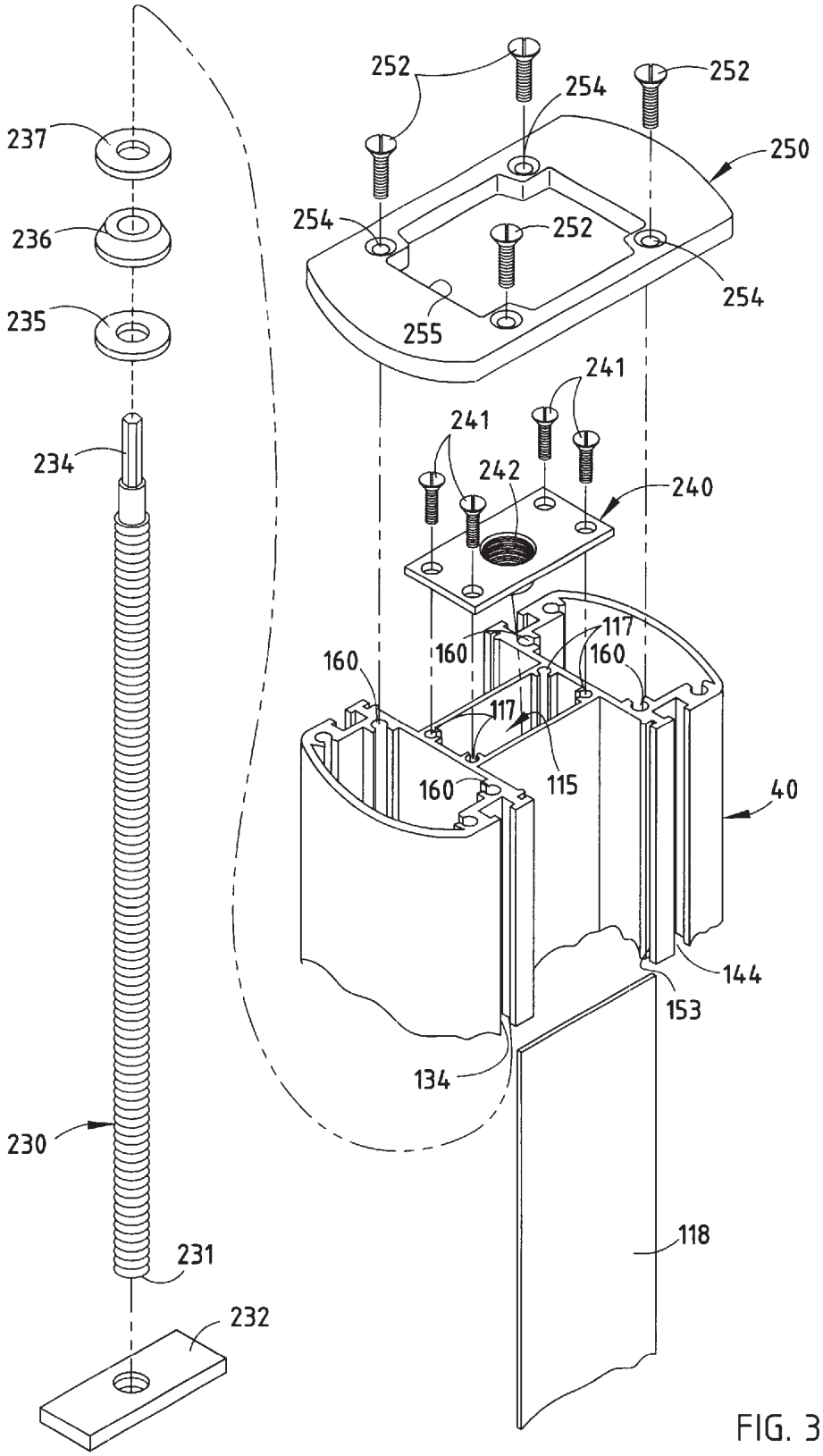
252
254
252
250
237
236
235
254
252
254
255
241
241
242
240
234
117
160
160
160
117
115
160
40
144
153
134
230
118
231
232

FIG. 3

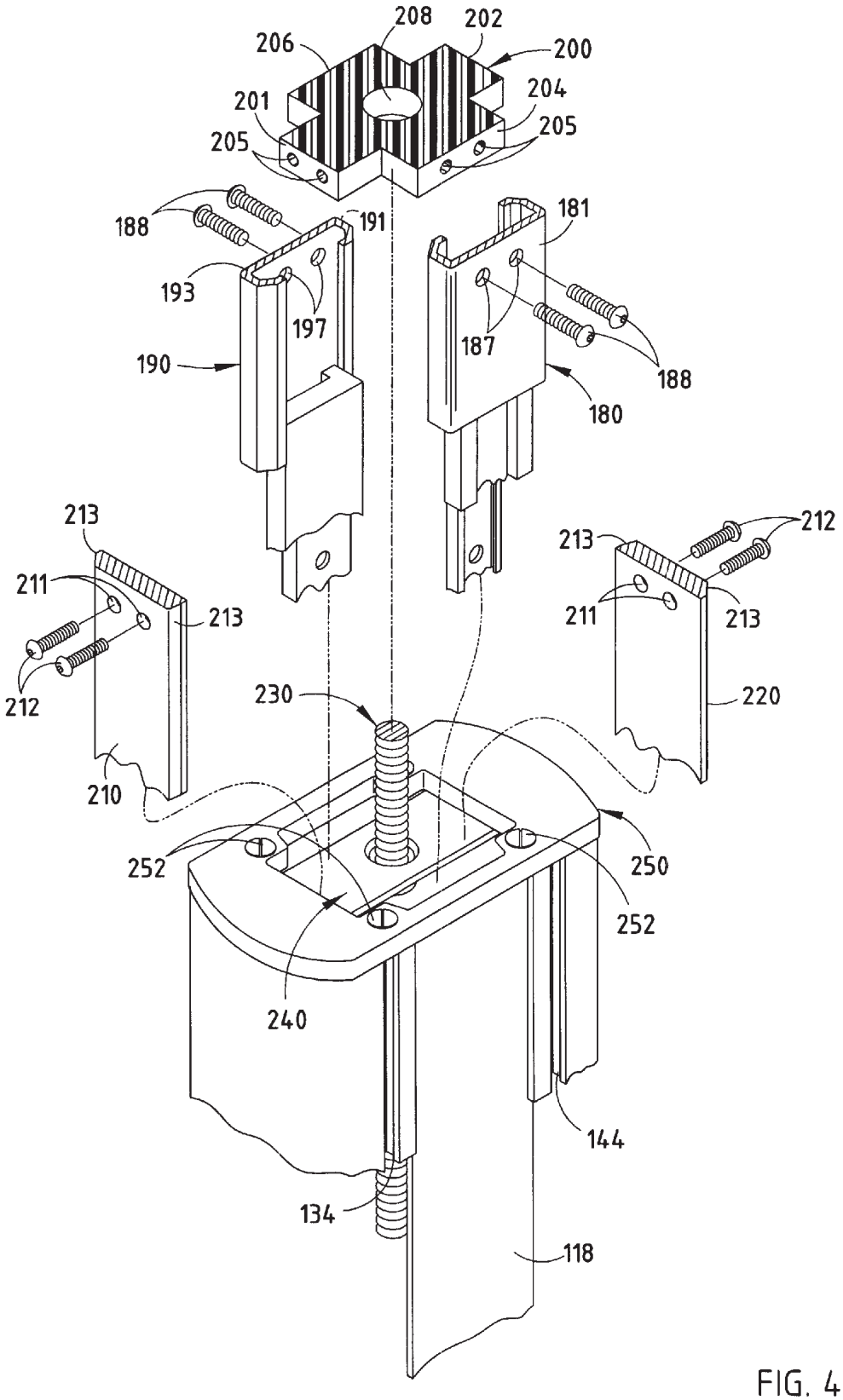
208
202
206
200
201
204
205
205
188
191
181
193
197
187
188
190
180
213
212
213
211
213
211
213
212
230
220
210
252
250
252
240
144
134
118

FIG. 4

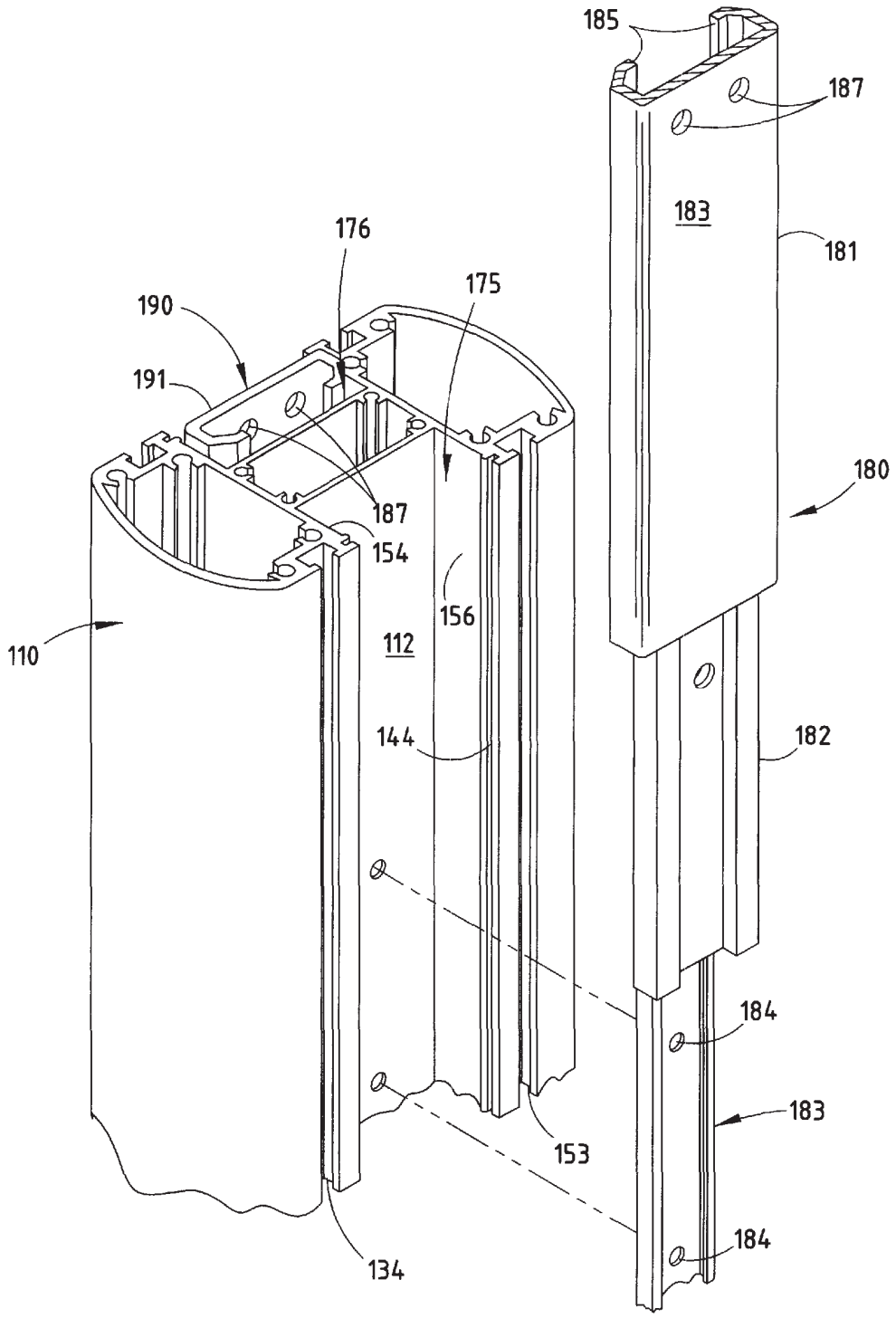
185
187
183
181
176
175
190
191
180
187
154
156
110
112
144
182
184
183
153
184
134

FIG. 5

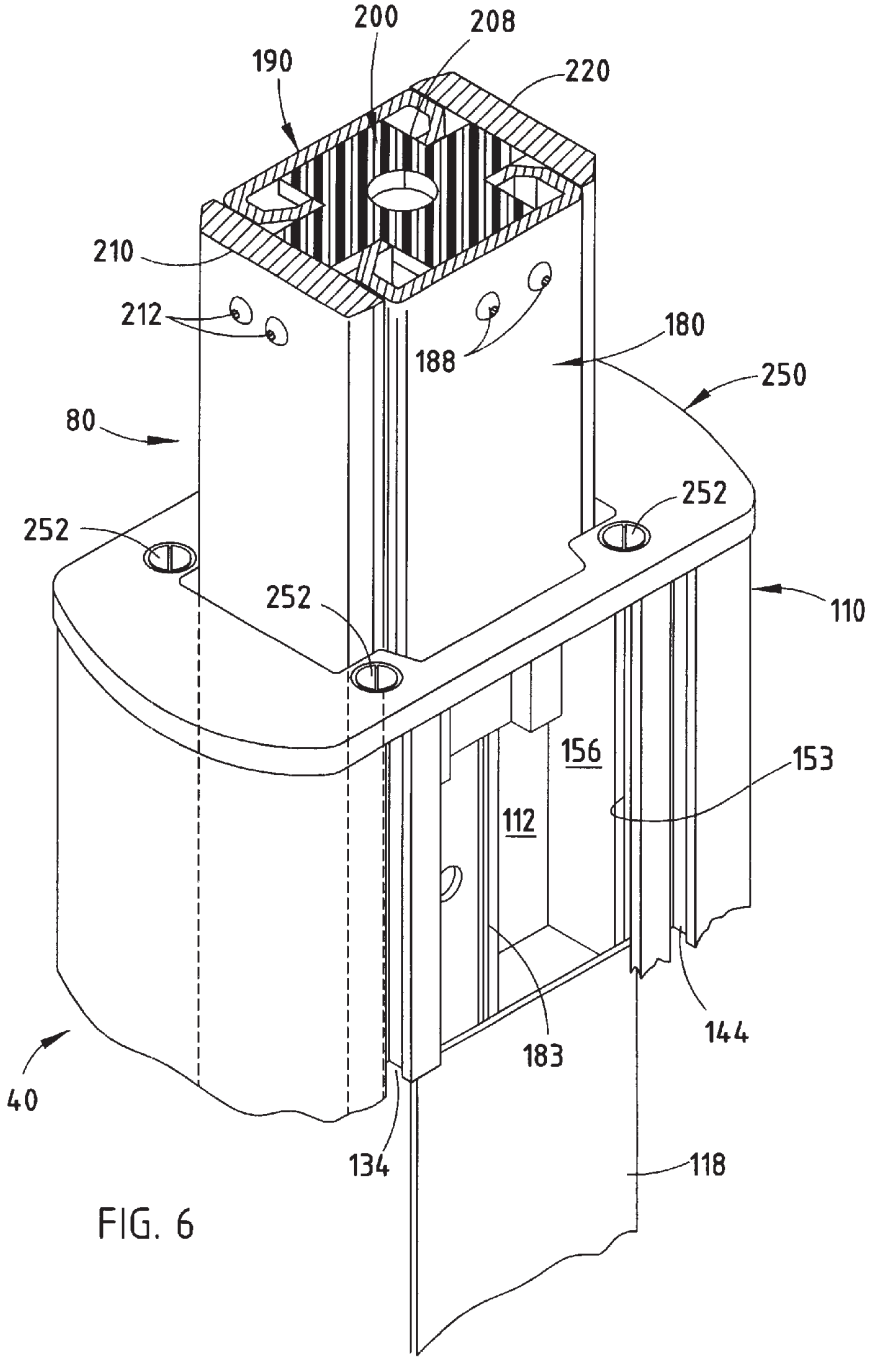
200
208
190
220
210
212
188
180
250
80
252
252
252
110
156
153
112
144
183
40
134
118

FIG. 6

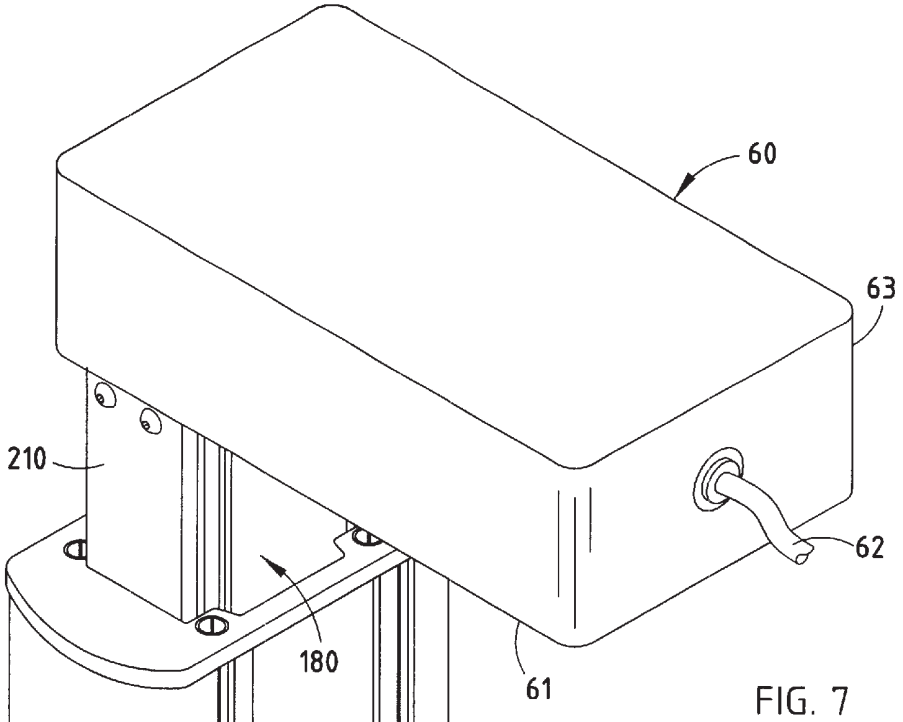
60
63
210
62
180
61
144
118
134

FIG. 7

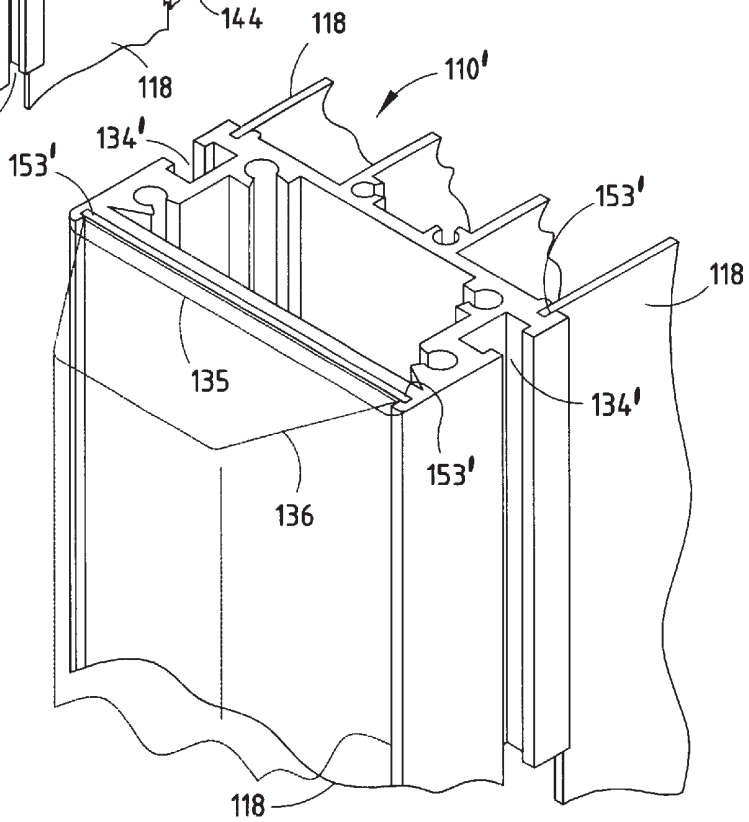
118
110'
134'
153'
153'
118
135
134'
153'
136
118

FIG. 8

ADJUSTABLE LEG ASSEMBLY

BACKGROUND OF THE INVENTION

The present invention relates to an adjustable leg assembly and particularly to a motor-driven leg assembly which can be employed for controlling the height of a work surface.

As the work place environment changes with technology, so too do the facilities employed by companies to provide ergonomically appropriate work stations for technical, clerical, and assembly personnel. In order to accommodate different job tasks, frequently it is desirable to have a work surface which is vertically adjustable, such that the work surface can be employed by individuals in a standing position, in a sitting position on an office chair, or in an intermediate position when using, for example, a stool-height seat. With the ubiquitous use of personal computers, multiple adjustable table heights accommodate different individual needs for placing a monitor, for example, at a level, which may be different than the writing surface or the work surface on which the computer controls are employed. There exists, therefore, an increasing need for a work surface which has an adjustable height and one which can be economically manufactured to provide desired movement and which esthetically blends with an office decor or other working environment.

There exists numerous adjustable table assemblies which are either mechanically controlled by, for example, a screw-jack mechanism or which are electrically controlled screw jacks. Some installations employ hydraulic cylinders with a pump for moving fluid from a master cylinder to slave cylinders mounted within telescopic legs of a table for controlling the vertical adjustment of the work surface. These systems typically employ telescopic tubes which conceal the actuators, be they mechanical, hydraulic or electrical, such that the work station base is coupled to a fixed outer tube and a telescopic inner tube surrounds an actuator, such as a hydraulic cylinder or screw jack coupled to a motor mounted to the undersurface of the table. Although such construction adequately provides the table motion, such designs limit the ability of the office designer to incorporate such tables in a variety of work place environments where, for example, an executive office may include such a work station, as may and assembly area, which typically require entirely different levels of decor.

It would be desirable, therefore, to provide a leg adjustment system which has universal application to a variety of work environments and one which is relatively inexpensive to manufacture, reliable in operation and provides an esthetic appearance which conforms to modern day work environments.

SUMMARY OF THE INVENTION

The adjustable leg assembly of the present invention satisfies this need by providing a mounting system in which an outer support or base leg receives a pair of spaced, multiple section slides, each having one end coupled within the base leg and the opposite end coupled to a motor actuator secured to the underside of a work surface. The slides provide lateral strength and stability for the telescopic motion between raised, lowered, and intermediate adjustable positions and provide a trim cover for concealing the drive mechanism employed for adjusting the work surface.

In the preferred embodiment of the invention, each adjustable leg assembly includes a rectilinear base leg with opposite sides on which there are mounted a pair of slides having one member of each slide fixed to the base leg and an opposite movable end of each slide coupled to a motor actuator secured to the underside of the work surface. A pair of trim strips are mounted to extend in the areas between the slides for concealing the actuator mechanism which extends between the base leg and the table surface. In a still further preferred embodiment of the invention, the base leg is an extrusion having a plurality of mounting apertures formed therein and trim panel receiving slots such that the appearance of the adjustable leg assembly can be modified for a given work environment and decor.

The adjustable leg assembly so-formed can accommodate a variety of actuators, such as hydraulic cylinders or screw jacks, although in the preferred embodiment electrically driven screw jacks are employed. The adjustable leg assembly of the present invention, therefore, provides an economical, reliable and sturdy leg assembly which can be employed with a variety of work surfaces including single pedestal or multiple leg table supports or for multiple tables used in conjunction with one another. The design of the adjustable coupling between the base leg and table top provides both a strong and reliable mechanism as well as one which accommodates the, décor of a variety of work environments. Further, in a preferred embodiment of the invention, the base legs and one or more cross members are extruded of the same design to reduce cost, accommodate assembly, and receive slide-in trim panels.

These and other features, objects and advantages of the present invention will become apparent upon reading the following description thereof together with reference to the accompanying drawings.

BRIEF DESCRIPTION OF THE DRAWINGS

FIG. **1** is a perspective view of a table embodying the present invention, shown partly in phantom form;

FIG. **2** is a greatly enlarged fragmentary, partly cross-sectional view of one of the table base legs and the cross member shown in FIG. **1**;

FIG. **3** is a fragmentary perspective exploded view of a part of the upper section of one of the base legs shown in FIG. **1** together with the drive mechanism which is enclosed therein upon assembly;

FIG. **4** is a fragmentary perspective exploded view, partly in cross section, of the assembly of the telescopic leg assembly shown in FIGS. **1** and **3**;

FIG. **5** is a fragmentary perspective exploded view of the mounting of one of the slides to the base leg;

FIG. **6** is a fragmentary perspective view, partly in cross section, of the structure shown in FIGS. **3**–**5** shown assembled;

FIG. **7** is a fragmentary perspective view of one of the motor actuating units and its associated adjustable legs; and

FIG. **8** is a fragmentary perspective view, partly in phantom form, illustrating alternative embodiments of an extrusion which can be employed for the base leg and cross members of the invention.

DETAILED DESCRIPTION OF THE PREFERRED EMBODIMENT

Referring initially to FIG. **1**, there is shown an adjustable table assembly **10** of the present invention, which includes a generally rectangular, horizontally extending work surface **20** coupled to a base **30** including a pair of horizontally extending feet **32** and **34** to which there is mounted verti-

cally extending base legs **40** and **50** in spaced relationship to one another and coupled by a cross member **45**. The work surface may be of any conventional material, such as a laminated composite board, solid wood, polymeric material, glass, or the like. Mounted to the underside **22** of work surface **20** are a pair of motor actuating assemblies **60** and **70**, each of which are substantially identical. Assemblies **60** and **70** each include an electrical motor, a low profile housing enclosing an electrical drive motor and right angle drive which is coupled to a screw jack as described below and which, in turn, is coupled to a thrust nut mounted in each of the legs **40** and **50**, respectively.

Telescopic leg assemblies **80** and **90** couple the motor actuating assemblies **60** and **70** to base legs **40** and **50**, respectively, and extend within the base legs when retracted and out of the base legs when extended, as the work surface height is adjusted in a vertical direction as indicated by arrow A in FIG. **1**. Each of the motor actuating assemblies **60** and **70** is coupled to a motor control **95** also mounted to the underside **22** of work surface **20** by means of a conductor or cord **62** for actuator **60** and **72** for actuator **70**. Conductors **62** and **72** are signal and power control lines and are coupled within a unique housing **96** of motor control **95**, which is described in greater detail in copending patent application entitled ADJUSTABLE TABLE CORD STORAGE ASSEMBLY, Ser. No. 09/573,144 filed on May 17, 2000, now U.S. Pat. No. 6,360,675, the disclosure of which is incorporated herein by reference.

The motor control **95** is coupled to an operator control **100** by means of a conductor or cord **102**. Operator control **100** is mounted to the underside front edge of surface **22** such that the operator control switches are conveniently accessible. Operator control **100** includes a plurality of switches such as a down control touch switch **101**, an up control touch switch **102**, a digital display **104** displaying the numeric height level of work surface **20** and memory position switches **105** through **109**. An AC power cord **93** having a conventional electrical plug (not shown) is coupled to a wall outlet for supplying operating power to the motor control **95** which, in turn, converts the input power to the desired operating voltages for motors contained within actuators **60** and **70** in response to commands from operator control **100** through motor control **95**. Control **95** includes a microprocessor programmed to receive signals representing the position of the telescopic leg assemblies **80** and **90** such that certain frequently used or desired positions can be stored in memory and, by actuating one of the preset switches **105–109**, the table surface can be moved to the desired position in response to an input command signal. Although the table shown in FIG. **1** is a two-pedestal table, it can be appreciated that the adjustable leg assembly of the present invention can be employed with single pedestal tables, tables having three or more legs or dual section tables with a front and rear work surfaces. Also, the adjustable leg assembly of the present invention can be employed in environments other than a vertical adjustable table.

In the preferred embodiment of the invention, the actuators **60** and **70** are electrically driven screw jacks driven by DC controlled, pulse-width modulated motors, although it should be appreciated that hydraulic or other actuators can be employed using the telescopic leg assemblies **80** and **90** of the present invention.

Having briefly described one table assembly embodying the present invention shown in FIG. **1**, a detailed description of the adjustable leg assembly is now presented in conjunction with FIGS. **2** through **7**. It is to be understood that each of the adjustable leg assemblies **80** and **90** mounted within base legs **40** and **50**, respectively, are identical and, therefore, a description only of one of the leg assemblies **80** is present herein.

Table 10 shown in FIG. **1** is supported by the pair of base legs **40** and **50**, which are coupled together near their upper end, as seen in FIG. **1**, by cross member **45**. Each of members **40**, **50** and **45** comprise identical rectilinear extruded members, which are shown in detail in FIG. **2**. A description, therefore, is provided only for base leg **40** which comprises an elongated, somewhat rectangular extrusion **110** having a central, generally rectangular, longitudinally extending channel **115** defined by elongated side walls **111**, **112** and end walls **113**, **114**. Channel **115** houses and receives a screw jack **230** (FIG. **3**), as described below. Walls **113** and **114** extend beyond channel **115** to the outer surface **120** of extrusion **110** and to the inner surface **122**. Self-tapping screw-receiving cylindrical channels **117** are formed at the corners of channel **115** for receiving, as described in connection with FIGS. **3** and **4**, a thrust nut at the top of each of the legs, including leg **40**. The integral extrusion **110** further includes a forward section **130** and rear section **140** with each section including opposed, T-shaped slots **132**, **134** on the front section and **142**, **144** on the rear section, respectively, for receiving therein mounting nuts as described in greater detail below.

In addition, inside facing walls **150**, **152**, **154** and **156** (defined by extended end walls **113**, **114**) on opposite sides of channel **115** include opposed facing slots **153** for receiving, as described below, trim panels which can be employed to provide a finished exterior to the leg defined by the extrusion. The outer sections **130** and **140** can be integrally formed, defining convex walls **131** and **141**, respectively, in one embodiment, or, as described below in connection with FIG. **8**, the outer sections can be modified to a variety of shapes and may also include opposed facing slots for receiving trim panels as desired. The extrusion **110** forming the legs further includes additional elongated cylindrical channels such as channels **160** at the outside corners of walls **113** and **114**, which are employed for receiving fastening screws for the attachment of a mounting cap **250**, as seen in FIGS. **3** and **4**. Extrusion **110** is identical for both legs **40**, **50** and cross member **45** and may be made of any suitable material, although preferably is an aluminum alloy, such as a 6005-T5, which is anodized to provide a finish suitable for universal application. The extrusions can likewise be powder coated or otherwise finished. Also, materials other than aluminum can be employed, although aluminum is the preferred metal. The outer ends **130**, **140** of the extrusion **110** also include enclosed elongated cylindrical apertures **170**, which are employed for providing attachment for mounting plate **165** (FIG. **2**) which secures an identical extrusion **45** forming a cross piece to the legs **40** and **50** as now described.

Mounting plate **165** is a rectangular plate having four apertures (not shown) which align with mounting apertures **170** in cross member **45** and which are employed to first secure a mounting plate **165** to opposite ends of cross member **45**. Subsequently, the mounting plates, which include four recessed mounting apertures **166** generally located at the corners thereof, are secured to the table legs **40** and **50** near the top, as seen in FIG. **1**, by means of threaded fasteners **168**, such as flat head screws, which extend through apertures **166** and into the T-shaped slots **134**, **144**, which receive generally rectangular fastening nuts **169** having a size which captively holds the nuts within the T-shaped slots **134**, **144** and prevents rotation of the nuts while allowing the cross member to be vertically slid into

position during assembly of the table. Once in position, the fasteners **168** are tightened to secure the interconnection of the cross member to the legs. The feet **32**, **34** are secured to the bottom of the extruded legs **40**, **50** utilizing the same apertures **170** on the outer corners of the extrusion **110**. The feet **32**, **34** may also be cast of aluminum and have a textured or otherwise treated surface which blends with or otherwise accentuates the appearance of legs **40**, **50**.

As seen in FIGS. **1**, **3**, **6**, and **7**, the facing slots **153** in extrusion **110** receives slide-in decorative trim panels **118** comprising elongated flexible rectangular strips which enclose the inner and outer sides of legs **40** and **50** as well as the front and back of cross member **45**, as also seen in FIG. **1**. Strips **118** are made of a suitable polymeric material which can have a color and texture to blend or contrast with the legs as desired to provide an appearance to the base for the work surface **20** which is appropriate for the environment in which the adjustable table is employed. The trim members are placed in the facing opposed slots **153** after the assembly of the telescopic leg sections **80** and **90** on the respective legs. The structure of the telescopic leg sections is now described in connection with FIGS. **3**–**7**.

The telescopic leg sections **80** and **90** are identical and only section **80** is described in detail herein. Referring initially to FIG. **5**, part of the telescopic leg assembly comprises a pair of multi-section slides, such as drawer slides, and, in the preferred embodiment of the invention as seen in FIG. **5**, a first drawer slide **180** and a second drawer slide **190** are mounted within the rectangular channels **175** and **185** in extrusion **110**. Each slide includes, in the preferred embodiment, three sections including an upper end **181**, an intermediate section **182**, and a lower end **183**. End **183** has spaced-apart mounting apertures **184** therein for receiving fastening screws (not shown) which secure the end member **183** to the wall **112** of extrusion **110**, as seen in FIGS. **5** and **6**. The top sections **181**, **191** of slides **180**, **190**, respectively, have a finished external surface **183**, **193**, respectively, and inwardly curved edges **185** to surround and conceal the space between the spaced-apart drawer slides for partially concealing the mechanism used for raising and lowering the table surface as described below.

The slides **180** in the preferred embodiment were conventional three-section drawer slides having an adjustable length of approximately **516** mm to allow vertical adjustment of the table height. Other slides having multiple sections providing shorter or longer adjustments may be employed. Surfaces **183** and **193** can be powder coated to match the legs, to contrast with the legs, or covered to provide whatever decorative appearance is desired. Sections **181** and **191** of each of the slides **180**, **190** are substantially the only section which is exposed when the table is raised so the remaining sections need not have a decorative appearance. The sides **180**, **190** provide lateral strength and support for the telescopic leg assemblies **80**, **90** and include at their upper ends apertures **187** and **197** for attachment of the slide members to a generally +-shaped mounting block **200** (FIGS. **4** and **6**) which can be integrally molded on the lower side **61** of the housing for control motor actuating unit **60** which, in turn, is mounted to the underside of work surface **20** utilizing conventional mounting screws. Thus, the lower end of slides **180**, **190** are mounted within the channels of fixed legs **40** and **50**, while the upper section is mounted to the movable table through mounting block **200** and the actuator control housing **63**. Once installed, the lower and intermediate sections of the slides are concealed by trim panels **118**.

The opposed facing generally rectangular slides **180**, **190** conceals the drive mechanism from opposite sides, while the remaining intermediate exposed sides are concealed by a pair of generally rectangular trim strips **210** and **220** (FIGS. **4**, **6** and **7**). For such purpose, each of the trim strips **210**, **220** include mounting apertures **211** near the top such that fastening screws, such as self-threading screws **212** can be extended therethrough and mount the upper end of trim strips **210**, **220** to the surfaces **201**, **202** of block **200** in opposition to the mounting surfaces **204**, **206** to which drawer slides **180** and **190** are secured by means of fastening screws **188**, as seen in FIG. **4**. For such purpose, block **200** may include suitable threaded apertures **205** to accommodate the fastening screws attaching the upper ends of slides **180**, **190** thereto as well as trim strips **210**, **220**. Block **200** includes an aperture **208** to allow the upper end **234** of screw jack **230** to extend into the motor actuator **60**, as seen in FIGS. **4** and **7**.

The trim strips **210**, **220** extend downwardly, generally in parallel spaced relationship to one another and serve to enclose the remaining two sides of the drive mechanism when the table is in a raised position. The trim strips **210**, **220** may have a trapezoidal cross section with tapered edges **213** to provide a clean appearance to the trim members **210**, **220** once the unit is assembled, as seen in FIGS. **6** and **7**. The actuator mechanism of the preferred embodiment comprises a motor-driven screw-jack actuator which intercouples between the motor-actuator units **60** and **70** and the base legs **40**, **50** as now described in conjunction with FIGS. **3** and **4**.

The screw jack actuator comprises an elongated, threaded screw **230** which extends downwardly within the channel **115** of leg **40** and is seated on a generally rectangular guide block **232** which stabilizes the lower end **231** of screw **230** within channel **115**. Block **232** is dimensioned to slide up and down within channel **115** as the assembly is raised and lowered. A thrust nut **240** receives the threaded screw **230** and includes a threaded aperture **242** for such purpose. Thrust nut **240** is secured to the upper end of leg **40** by means of four threaded fasteners **241** which mount the rectangular plate integrally including thrust nut **242** to cap the channel **115** by extending through the screw-receiving channels **117**. The upper end of screw jack **230** includes a keyed end **234** which extends through washer **235**, thrust bearing **236** and washer **237** and is conventionally coupled to the motor actuator unit **60** utilizing a right angle coupling having a collar with set screws or the like for securing end **234** to the actuator.

Once the slide members **180**, **190** and trim members **210**, **220** and the actuator **230** have been installed, a cover cap **250** is mounted over the end, as seen in FIG. **4**, utilizing four self-threading screws **252** extending through apertures **254** in cap **250** to thread into channels **160** in extrusion **110**. Cap **250** includes a generally rectangular-shaped aperture **255** providing sufficient clearance for the outer surfaces **183**, **193** of the upper sections of slides **180**, **190** to extend therethrough without contact and allowing the trim strips **210**, **220** to move downwardly therethrough, as illustrated in FIG. **6**, to provide a compact appearance to the unit, as best seen in FIG. **6**, once assembled. Block **200** is an integrally formed part of the lower side **61** of the motor actuator housing **63** or can be separately attached to the lower side **61** of the motor actuator housing utilizing conventional fasteners. Block **200** provides the mechanical attachment to the motor actuator which, in turn, is conventionally attached to the underside of the work surface **20** utilizing fasteners extending through housing **63**.

Upon actuation of the motor actuators by the operator intervention utilizing control **100**, signals are sent from the motor controller **95** to each of the motor actuators **60** and **70**,

causing screw jacks **230** in each of the legs to rotate, raising and lowering the screw jack with respect to the fixed thrust nut **240** mounted to the lower legs **40**, **50** of the table causing the table to either raise or lower in a direction indicated by arrow A. The drawer slides **180**, **190** are made of steel and provide strength and rigidity to the telescopic interconnection between the underside **22** of work surface **20** and the fixed legs **40**, **50** while, together with strips **210**, **220**, concealing the screw jack assembly **230**. In other embodiments, hydraulic cylinders may be employed and, when extended above legs **40** and **50**, are similarly concealed with trim strips and slides. In some heavy duty applications, it may be desirable to provide four drawer slides instead of two drawer slides and two trim strips, in which case the extrusion **110** would be modified by removing the integral crowned outer surfaces **131**, **141** and providing a channel similar to channels **175**, **176** on the sides of the legs, which then would be covered by trim panels **118** as in the alternative embodiments shown in FIG. **8** below.

In the preferred embodiment of the invention, the screw jack actuators **60**, **70** were low profile motor-driven assemblies available from Suspa Incorporated, and each provides a lifting force of 165 pounds such that work surface **20** can safely support 330 pounds of weight and be controlled for raising and lowering the table through a distance of 516 mm.

Referring now to FIG. **8**, there is shown an alternative embodiment of the extrusion **110** identified as extrusion **110** with substantially identical elements being identified with the same reference numeral followed by a prime (') symbol. In place of ends **131**, **141**, extrusion **110'** may include in one embodiment facing slots, such as slots **153'** in the ends as well as the sides for receiving trim panels such as panels **118** for all sides of the fixed legs. Additionally, instead of the convexly curved outer surfaces **131**, **141** and in place of the trim slots **153'** and trim panels **118**, extrusion **110'** may include a relatively flat outer surface identified in phantom lines in FIG. **8** as surface **135** or a trapezoidal surface identified as **136** in FIG. **8**, or any other desired configuration which can be accomplished through formation of the extrusion mold. The cross member **45** would be similarly formed to conform the legs and cross member for a given table design. If desired, the T-shaped slots **132**, **134**, **142**, and **144**, which themselves provide an accent to the legs, can be capped with a trim bead.

Although the extendable leg assembly of the present invention is particularly suited for use in connection with a work surface to be raised and lowered, it can be used in any environment in which a first member is desired to be moved with relation to a second member and where desired stability and esthetics is required. When used in combination with the unique extrusion and trim panels of the leg assemblies of the present invention, the telescopic section and the base legs provide a unique adjustable table mounting assembly which is very flexible in its design, accommodates different trim accents, and provides a reliable, attractive table assembly.

It will become apparent to those skilled in the art that various modifications to the preferred embodiments of the invention as described herein can be made without departing from the spirit or scope of the invention as defined by the appended claims.

The invention claimed is:

1. An adjustable leg assembly comprising:

an actuator having a screw jack;

a base member having a central elongated channel defined in part by a pair of opposed mounting surfaces, said channel receiving said screw jack therein; and

a telescopic leg extendable within said channel, said leg defined in part by at least a first multiple section slide having end members slidably movable with respect to one another wherein one end member is fixedly mounted to one of said mounting surfaces of said base member on a side of said mounting surface opposite said channel and the other end member has an end which is coupled to said actuator to be movable with respect to said base member such that said other end member extends over and covers said screw jack when said actuator extends said telescopic leg from said channel.

2. The assembly as defined in claim **1** wherein said base member includes a thrust nut for coupling said screw jack of said actuator to said base member.

3. The assembly as defined in claim **2** and further including a second multiple section slide having end members slidably movable with respect to one another wherein one end member is coupled to said base member on a mounting surface opposite said first slide and the other end member has an end which is coupled to said actuator.

4. The assembly as defined in claim **3** and further including a work surface and wherein said actuator includes a housing coupled to one side of said work surface.

5. An adjustable table comprising:

a work surface;

at least one adjustable leg coupled to said work surface, said adjustable leg defined by an actuator having a housing coupled to said work surface and a movable element;

a base leg having a central elongated channel defined in part by a pair of opposed mounting surfaces for receiving said movable element therein; and

a pair of slides having end members slidably movable with respect to one another wherein one end member has an end which is fixedly coupled to said actuator and the other end member is coupled to one of said mounting surfaces of said base leg such that said one end member partially extends over said movable element when said movable element extends from said channel when said actuator raises the height of said work surface, and further including a mounting block coupled to said actuator housing for receiving said end of said one end member of said slides, wherein said slides are mounted between said mounting block and said opposed mounting surfaces of said base leg and wherein said mounting block is integral with said housing of said actuator, and wherein said slides are mounted in opposed relationship to said mounting block and said base leg and wherein said assembly further includes a pair of trim strips extending from said block to said base leg in alternate spaced relationship to said slides.

6. The adjustable table as defined in claim **5** wherein said base leg includes recesses for receiving said opposite ends of said slides.

7. The adjustable table as defined in claim **6** wherein said recesses of said base leg are defined by opposed facing walls having opposed facing slots for receiving a trim panel.

8. The adjustable table as defined in claim **7** and further including a trim panel insertable within said opposed facing slots of said base leg for covering said opposite end of a slide.

9. An adjustable leg assembly comprising:

an actuator having a housing and a movable element;

a mounting block coupled to said housing;

a base leg coupled to said movable element; and

a pair of multiple section telescopic slides, each having one end secured to said mounting block and an opposite end secured to said base leg such that as said movable element of said actuator moves in first and second directions, said mounting block moves with respect to said base leg and extends and retracts said telescopic slide, wherein said telescopic slides are mounted in opposed relationship to said mounting block and said base leg and wherein said assembly further includes a pair of trim strips extending from said block to said base leg in alternate spaced relationship to said slides.

10. The assembly as defined in claim **9** wherein said base leg includes recesses for receiving said opposite ends of said slides.

11. The assembly as defined in claim **10** wherein said recesses of said base leg are defined by opposed facing walls having opposed facing slots for receiving a trim panel.

12. The assembly as defined in claim **11** and further including a trim panel insertable within said opposed facing slots of said base leg for covering said opposite end of a slide.

13. The assembly as defined in claim **10** wherein said base leg is an extrusion having a central channel for receiving said movable element of said actuator.

14. The assembly as defined in claim **13** wherein said mounting block is integral with said housing of said actuator.

15. The assembly as defined in claim **14** wherein said actuator includes an electrical motor and said movable element comprises a screw jack.

16. The assembly as defined in claim **15** and further including a thrust nut coupled to said base leg for receiving said screw jack.

17. An adjustable table comprising:

a work surface;

at least one adjustable leg coupled to said work surface, said adjustable leg defined by an actuator having a housing coupled to said work surface and a screw jack;

a base leg having a central elongated channel defined in part by a pair of opposed mounting surfaces for receiving said adjustable leg therein;

a pair of multiple section telescopic slides mounted in opposed relationship to said base leg and actuator, wherein each has end members movable with respect to one another wherein one end member of each slide is fixedly mounted to said actuator and the other end member of each slide is coupled to one of said mounting surfaces of said base leg such that said one end member of each slide partially extends over said screw jack when said screw jack extends from said channel when said actuator raises the height of said work surface; and

a pair of trim strips extending from said block to said base leg in alternate spaced relationship to said slides.

18. An adjustable table comprising:

a work surface;

at least one adjustable leg coupled to said work surface, said adjustable leg defined in part by an actuator mounting block and an actuator having a housing coupled to said work surface and a screw jack;

a base leg having a central elongated channel defined in part by a pair of opposed mounting surfaces for receiving said adjustable leg therein, wherein said adjustable leg is further defined by a pair of multiple section telescopic slides having end members slidably movable with respect to one another wherein an end of one end member of each slide is fixedly mounted to said actuator mounting block at opposed sides and an end of the other end member of each slide is coupled to one of said mounting surfaces of said base leg such that said one end member extends over and covers said screw jack when said screw jack extends from said channel as said actuator raises the height of said work surface.

19. The adjustable table as defined in claim **18** wherein said mounting block is integral with said housing of said actuator.

20. The adjustable table as defined in claim **19** wherein said actuator includes an electrical motor and said movable element comprises a screw jack.

21. The adjustable table as defined in claim **20** and further including a thrust nut coupled to said base leg for receiving said screw jack.

* * * * *