US006721178B1

(12) **United States Patent**
Clark et al.

(10) **Patent No.: US 6,721,178 B1**
(45) **Date of Patent: Apr. 13, 2004**

(54) **MOBILE CLINICAL WORKSTATION**

(75) Inventors: **Richard A. Clark**, Atlanta, GA (US); **Michael R. Jacobs**, Atlanta, GA (US); **Steven B. Flemig**, Woodstock, GA (US)

(73) Assignee: **FHS Acquisition, LLC**, Norcross, GA (US)

(*) Notice: Subject to any disclaimer, the term of this patent is extended or adjusted under 35 U.S.C. 154(b) by 0 days.

(21) Appl. No.: **10/171,582**

(22) Filed: **Jun. 13, 2002**

Related U.S. Application Data

(63) Continuation of application No. 09/397,817, filed on Sep. 17, 1999.
(60) Provisional application No. 60/100,976, filed on Sep. 18, 1998.

(51) **Int. Cl.**[7] **G06F 1/16**
(52) **U.S. Cl.** **361/686**; 361/682; 361/683; 312/223.3; 248/918
(58) **Field of Search** 361/683, 686, 361/680, 681, 682; 312/223.1, 223.2, 223.3, 197, 239, 208.2; 248/161, 404, 676–678, 158, 370, 127, 129, 918–919; 108/3, 25, 50.19, 147, 50.11, 150, 50.02; 606/32, 202

(56) **References Cited**

U.S. PATENT DOCUMENTS

D279,007	S	5/1985	Empson et al.
4,640,199	A	2/1987	Zigman
D289,873	S	5/1987	Gemmell et al.

(List continued on next page.)

FOREIGN PATENT DOCUMENTS

CH	688607	6/1989
DE	29506433	8/1995
DE	19642425	4/1996

(List continued on next page.)

OTHER PUBLICATIONS

EMS Technologies, Inc. and LXE, Inc. vs. Infologix, Inc., Civil ActionNo. 1:03–CV–0391–ODE, "Defendant Infologix, Inc.'s Answer and Affirmative Defenses," filed May 20, 2003.

Primary Examiner—Michael Datskovsky
(74) *Attorney, Agent, or Firm*—Sutherland Asbill & Brennan LLP

(57) **ABSTRACT**

A mobile workstation includes an adjustable-height horizontal tray and a pull-out keyboard tray mounted beneath the horizontal tray to support a keyboard. A device, such as computer terminal, mounts to the horizontal tray through installation into a vertically-mounted docking station mounted to the horizontal tray, or through a mounting bracket mounted adjacent to the horizontal tray. A tiltable bracket mounts the docking station to the horizontal tray, and a clutch assembly allows the angle of the bracket and the angle of the docking station and the computer terminal, to be adjusted to avoid glare on the terminal's display screen. With a mounting bracket, a tiltable bracket mounts a vertically-mounted display screen to the top of the horizontal tray. The mobile workstation also carries a power unit including an extended-life battery and a battery charger that connects to an AC power supply to charge the conventional battery pack connected to the computer terminal as well as the extended-life battery carried on the mobile workstation. When the computer terminal is stored in the mobile workstation, the wireless computer terminal can communicate through a radio transceiver in communication with a computer network, such a distributed patient-care computer network. Furthermore, a mobile workstation with a docking station includes a spring-mounted vertically-movable leveling tray that allows the computer terminal to be easily removed from the docking station using a push-down-and-tilt motion. An electronic and/or key lock selectively prevents vertical movement of the leveling tray to secure the computer terminal within the docking station.

44 Claims, 21 Drawing Sheets

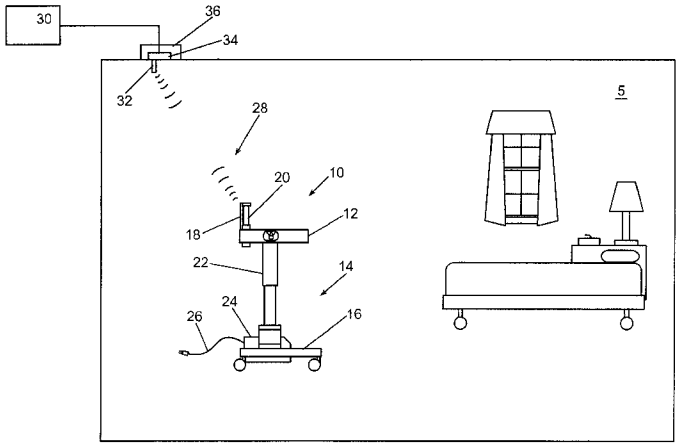

U.S. PATENT DOCUMENTS

D295,415	S		4/1988	Thies et al.	
4,852,500	A		8/1989	Ryburg et al.	
4,918,841	A		4/1990	Turner et al.	
D310,358	S		9/1990	Nuttall et al.	
D312,630	S		12/1990	Esslinger	
4,989,291	A		2/1991	Parent	
D317,912	S		7/1991	Takai	
D319,405	S		8/1991	Brawne	
D319,435	S		8/1991	Brown	
D326,847	S		6/1992	Savio	
5,174,223	A		12/1992	Nagy et al.	
D337,104	S		7/1993	Orchard	
D339,796	S		9/1993	Goodner et al.	
5,287,815	A	*	2/1994	Gross	108/50.14
D344,933	S		3/1994	Wiseman et al.	
D348,449	S		7/1994	Rodd et al.	
D349,489	S		8/1994	Wang	
D354,052	S		1/1995	Imai	
D354,952	S		1/1995	Rodd	
D357,468	S		4/1995	Rodd	
5,473,997	A		12/1995	Solomon et al.	
5,536,084	A		7/1996	Curtis et al.	
5,630,566	A		5/1997	Case	
5,687,717	A	*	11/1997	Halpern et al.	600/300
5,694,199	A	*	12/1997	Rodriguez	351/223
D393,382	S		4/1998	Rutter et al.	
5,772,637	A	*	6/1998	Heinzmann et al.	604/248
5,842,672	A		12/1998	Sweere et al.	
5,868,079	A		2/1999	Charny	
6,061,104	A		5/2000	Evanicky et al.	
6,098,936	A		8/2000	Birrell	
6,269,753	B1		8/2001	Roddan	
6,298,794	B1		10/2001	Brown et al.	
6,394,402	B2		5/2002	Coonan et al.	
6,435,109	B1		8/2002	Dell et al.	

FOREIGN PATENT DOCUMENTS

DE	19536664	4/1997
DE	19650100	6/1998
EP	84308242	6/1986
EP	88311563	6/1989
EP	0796575	9/1997
FI	19970004408	6/1999
GB	8114991	5/1981
JP	03-331908	6/1993
JP	08-076374	3/1996
JP	08-310391	11/1996
JP	09-013939	1/1998
JP	08-308853	3/1998
JP	09-330769	5/1999
WO	PCT/US97/09131	12/1997

* cited by examiner

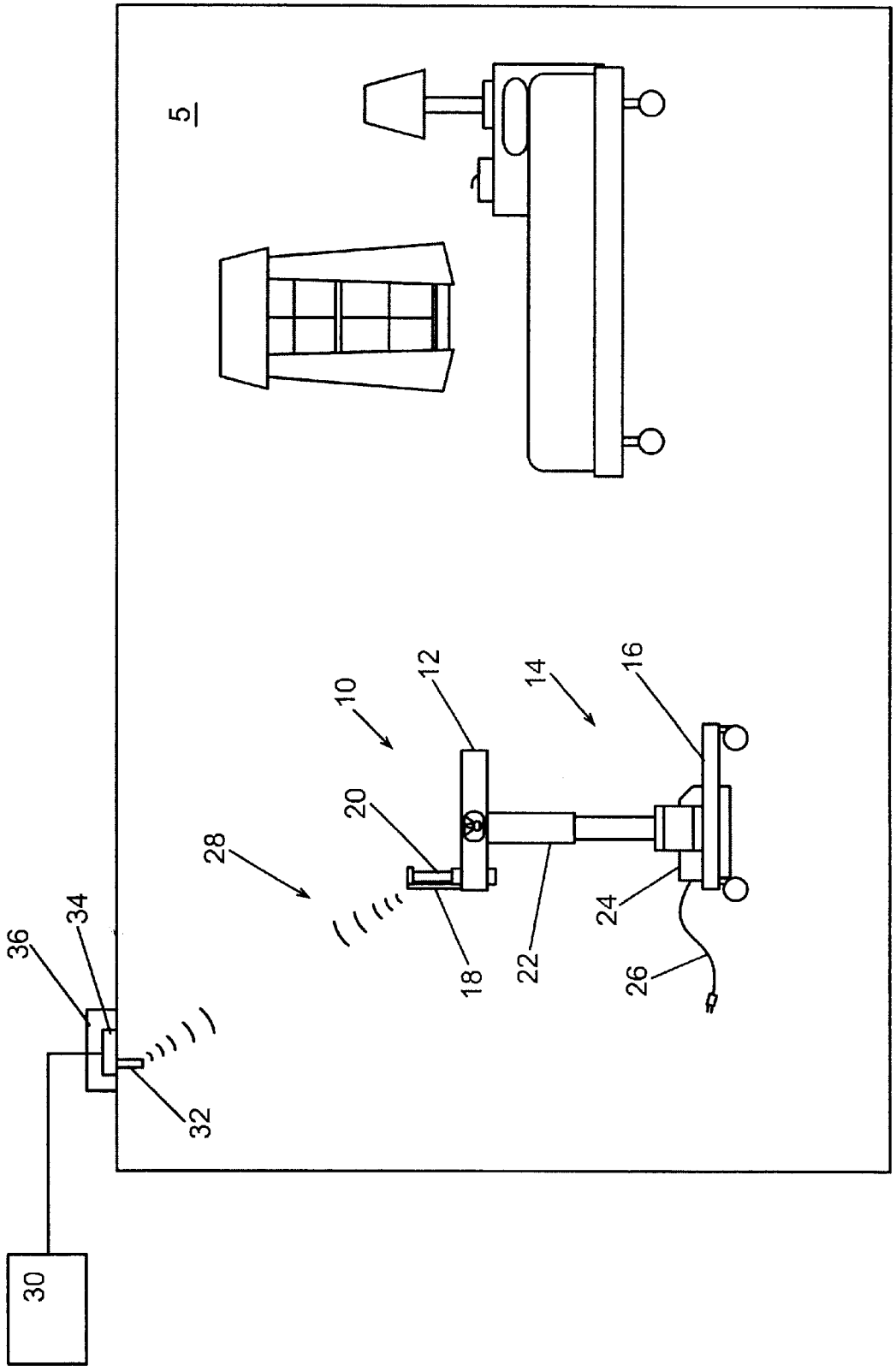

Fig. 1

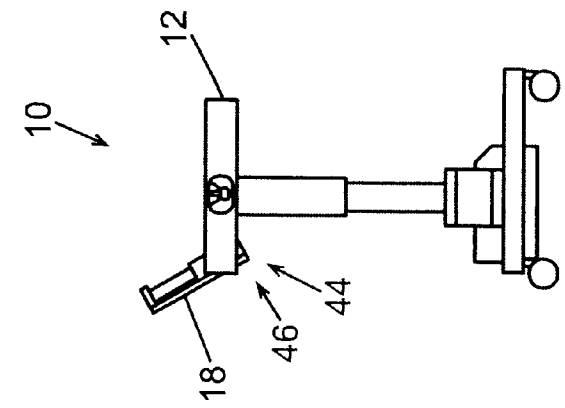

Fig. 2D

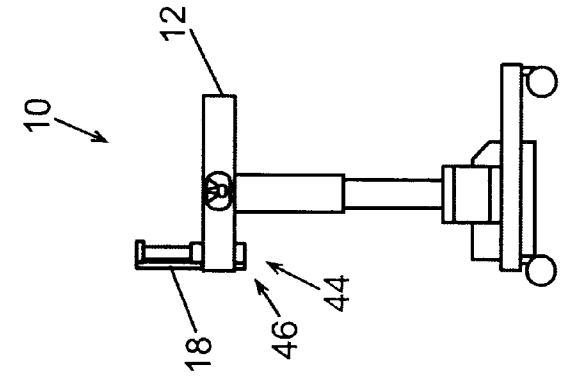

Fig. 2C

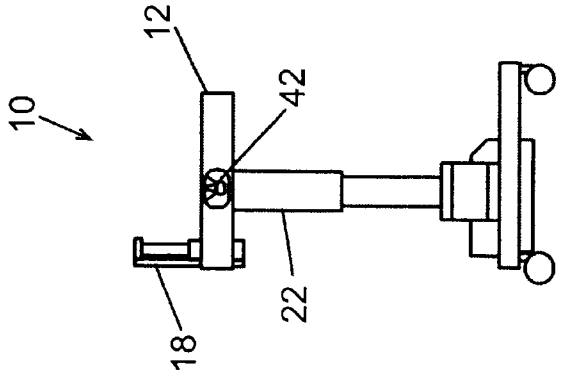

Fig. 2B

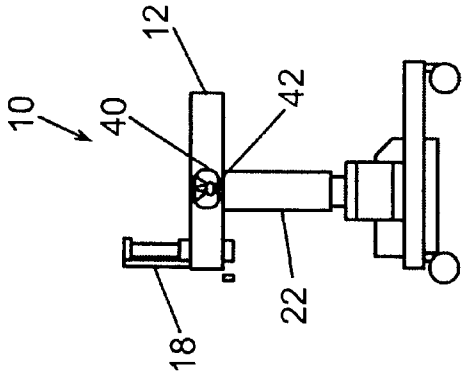

Fig. 2A

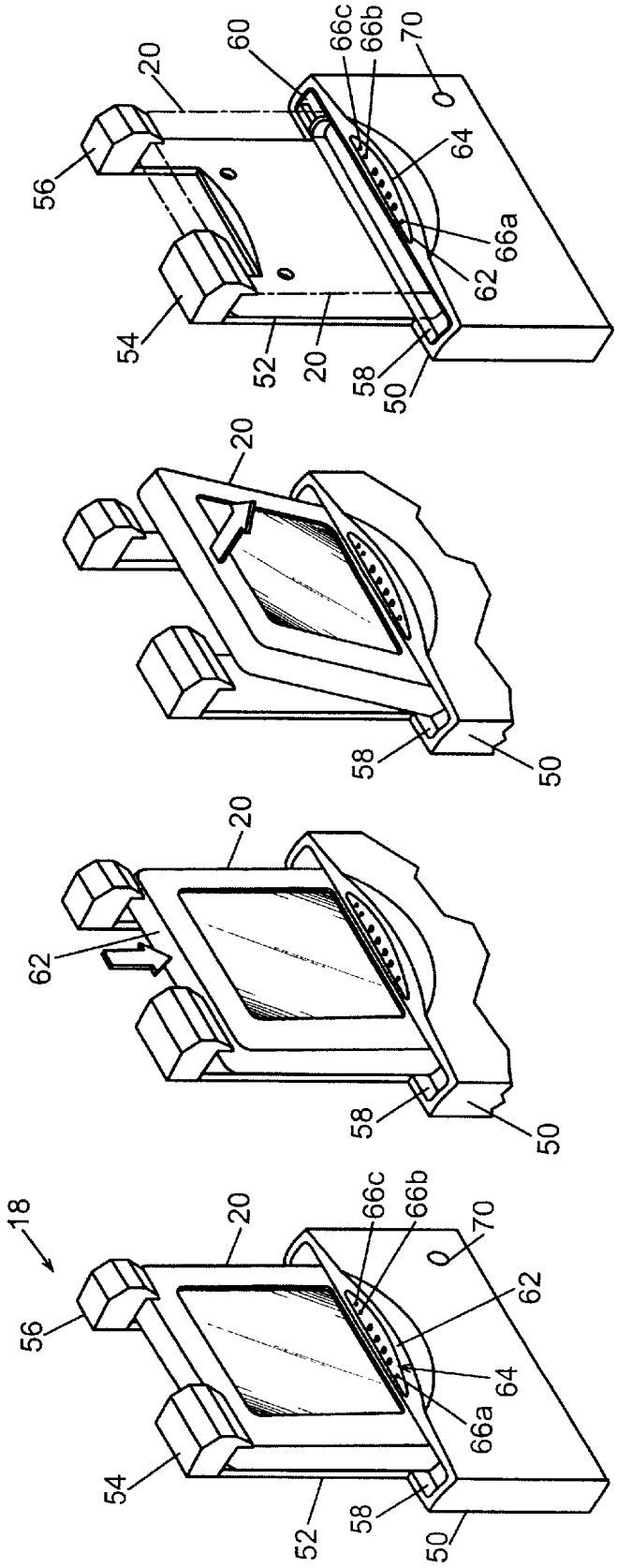

Fig. 3A

Fig. 3B

Fig. 3C

Fig. 3D

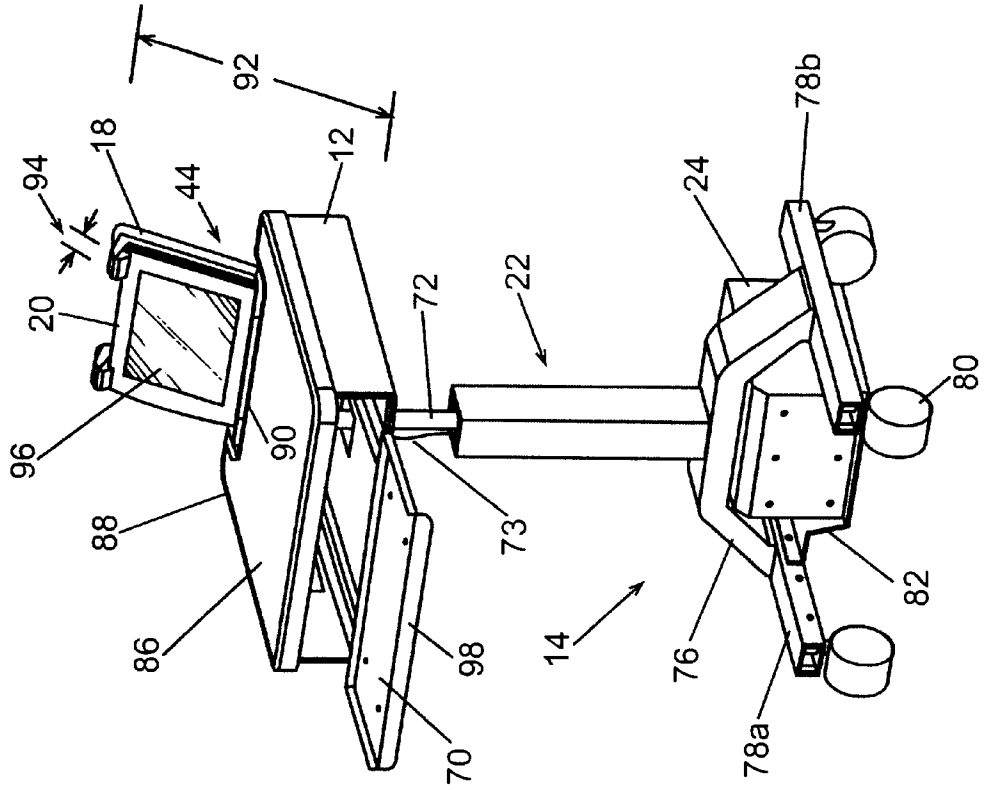
92
94
18
44
12
20
96
90
88
86
72
22
73
98
70
14
24
78b
80
82
76
78a

Fig. 4B

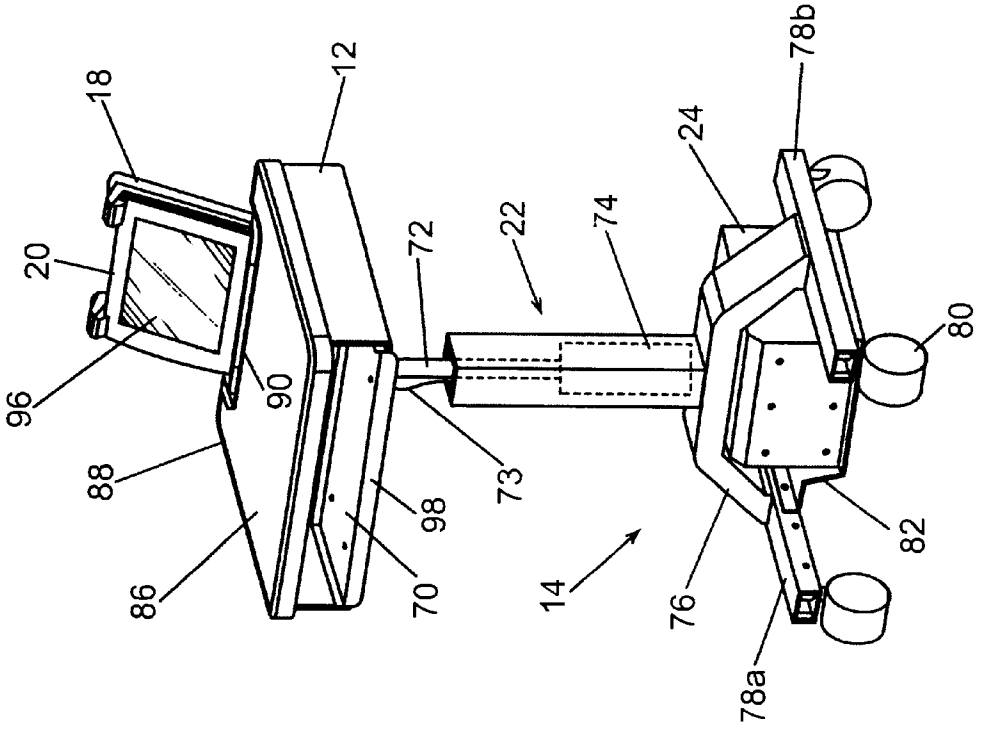
18
12
20
96
90
88
86
72
22
74
73
98
70
14
24
78b
80
82
76
78a

Fig. 4A

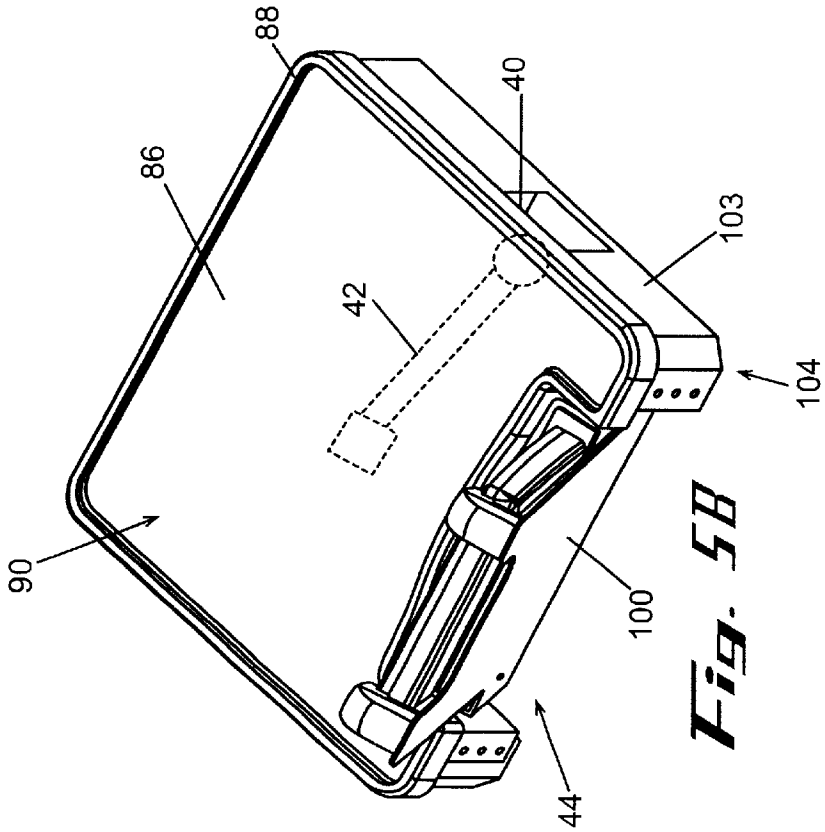

Fig. 5B

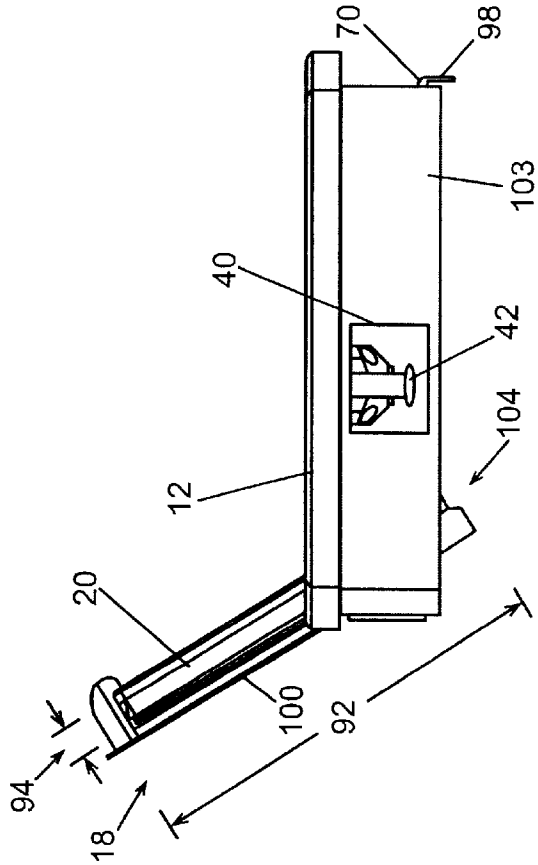

Fig. 5A

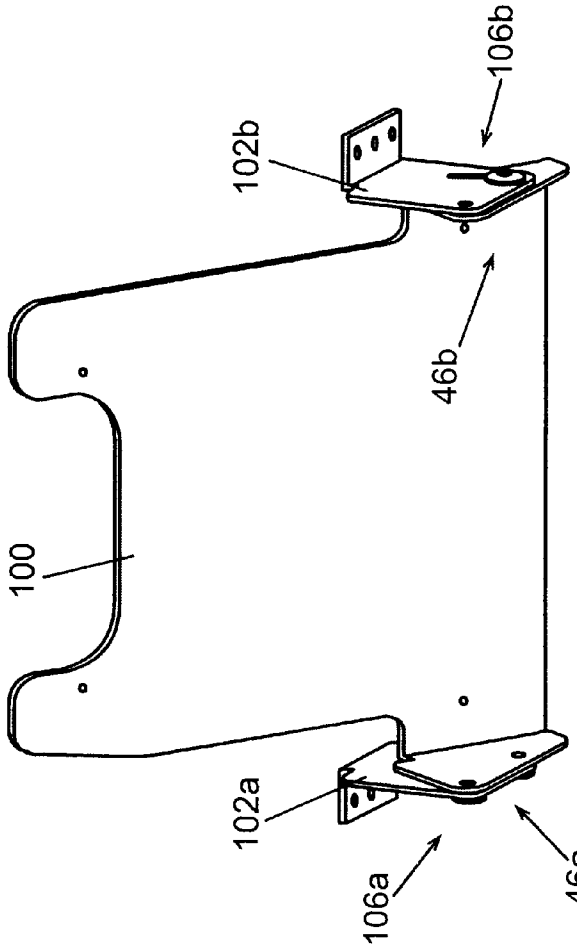

Fig. 6B

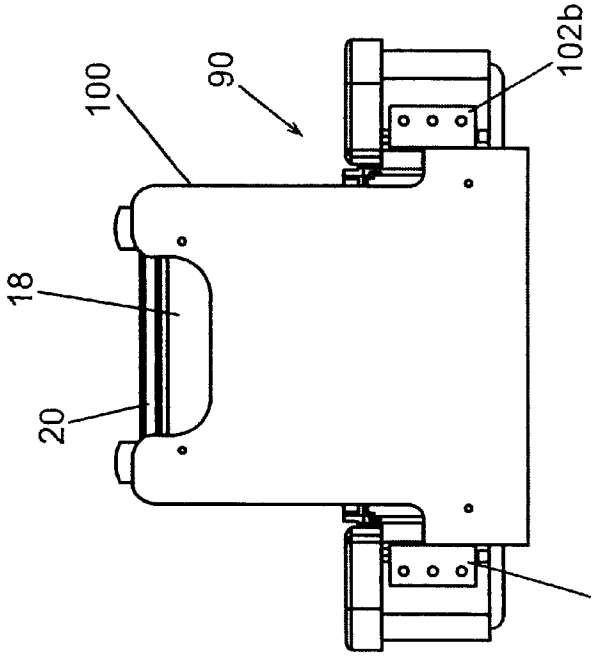

Fig. 6A

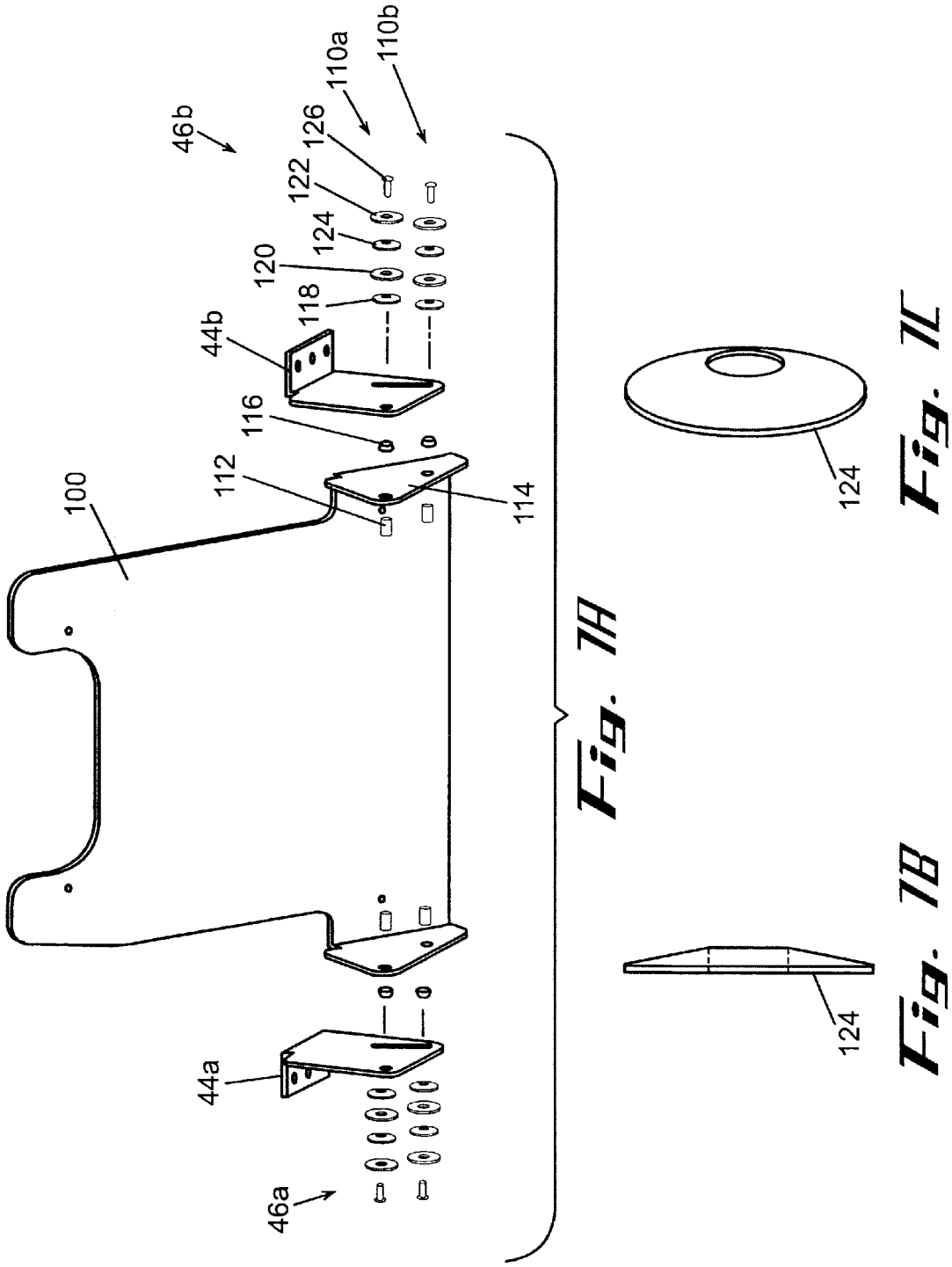

Fig. 7A

Fig. 7B

Fig. 7C

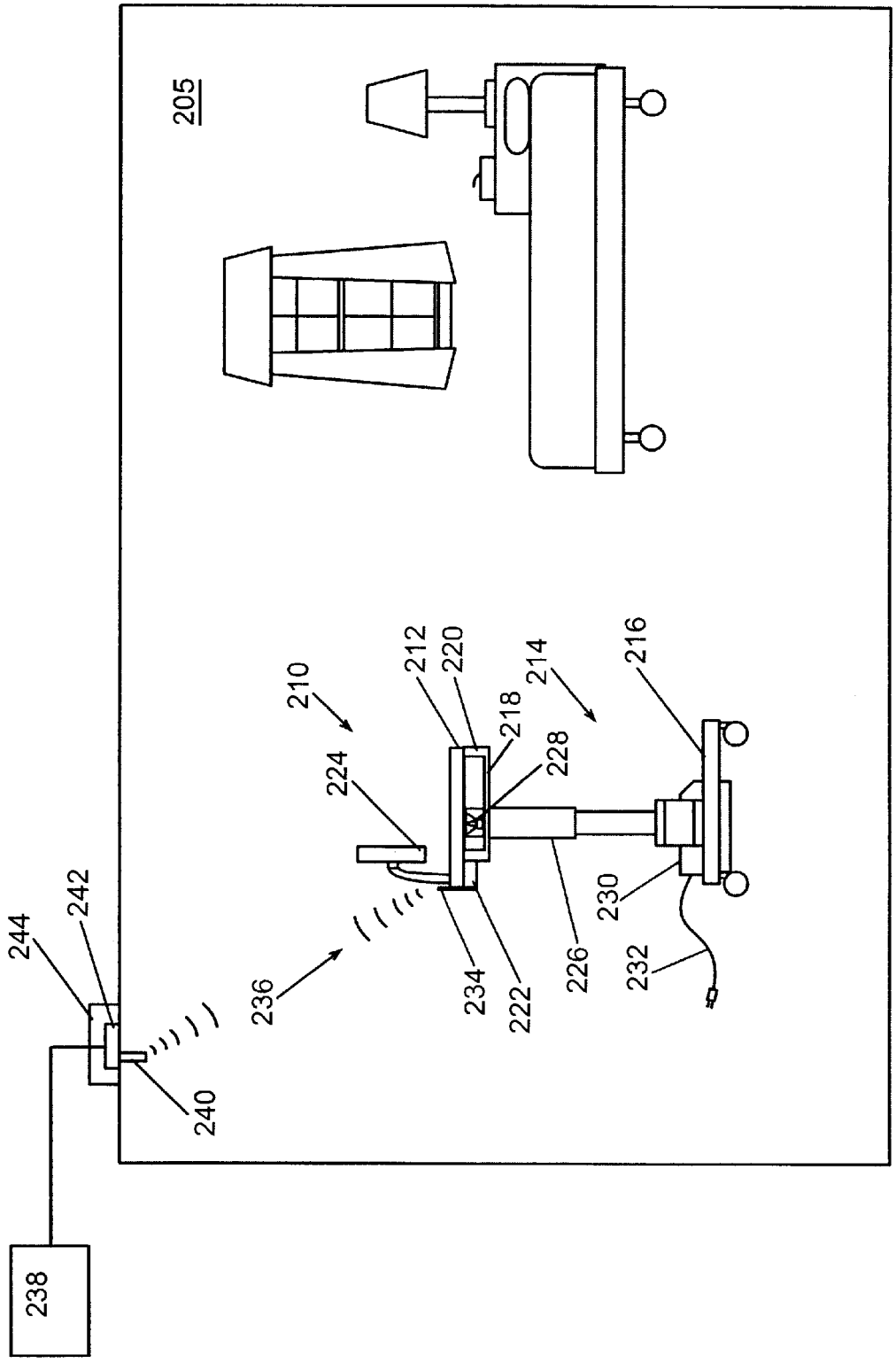
205
210
212
220
214
216
218
228
224
230
232
226
222
234
236
240
242
244
238

Fig. 8

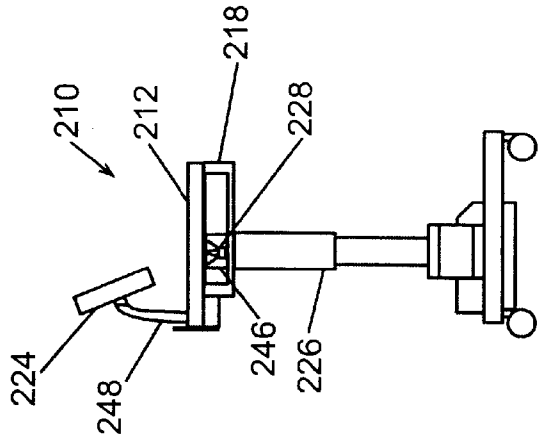

Fig. 9D

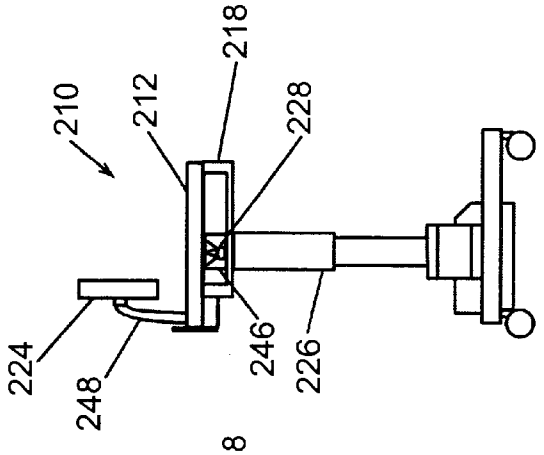

Fig. 9C

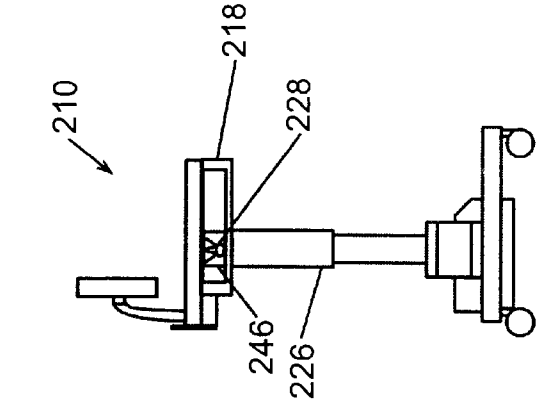

Fig. 9B

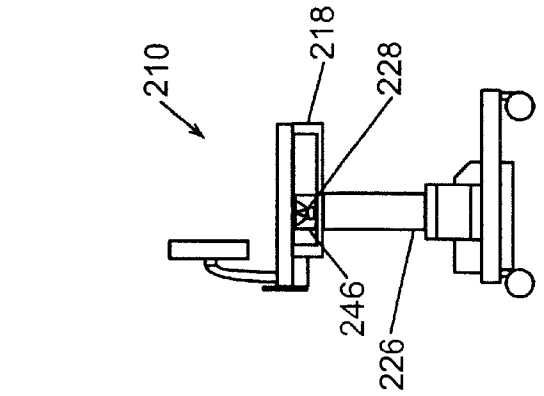

Fig. 9A

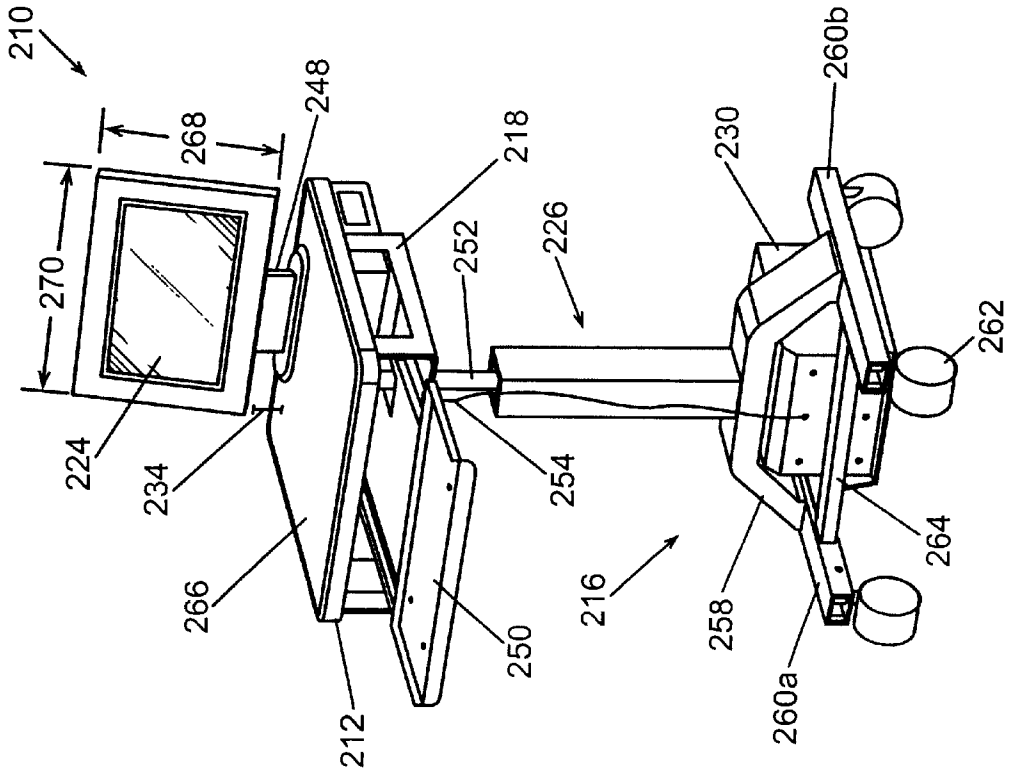

Fig. 10B

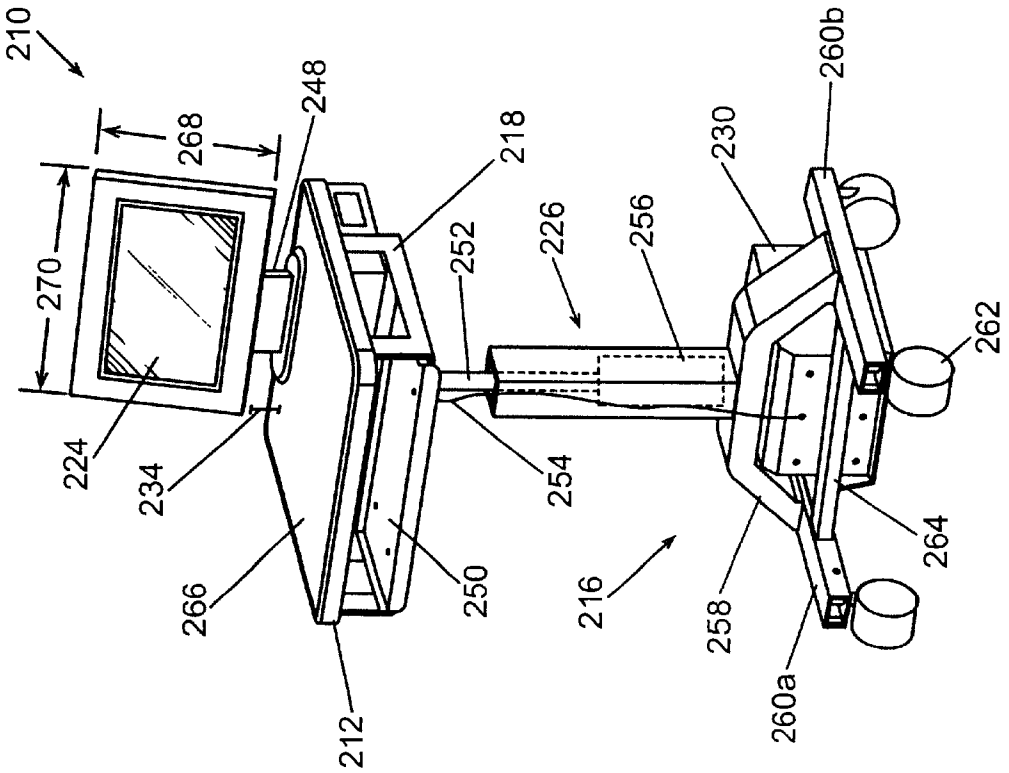

Fig. 10A

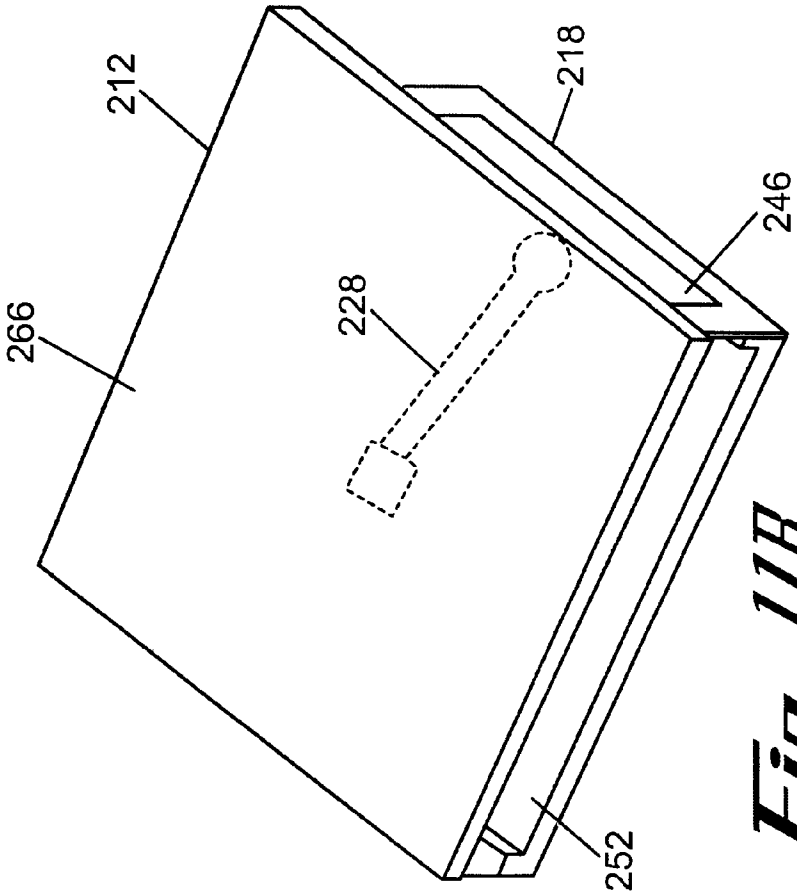

Fig. 11B

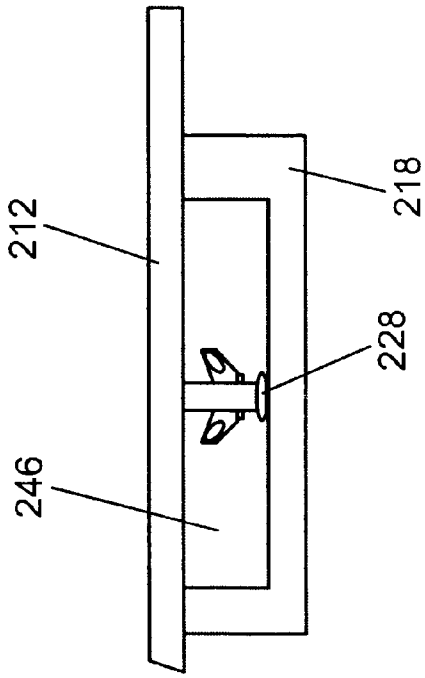

Fig. 11A

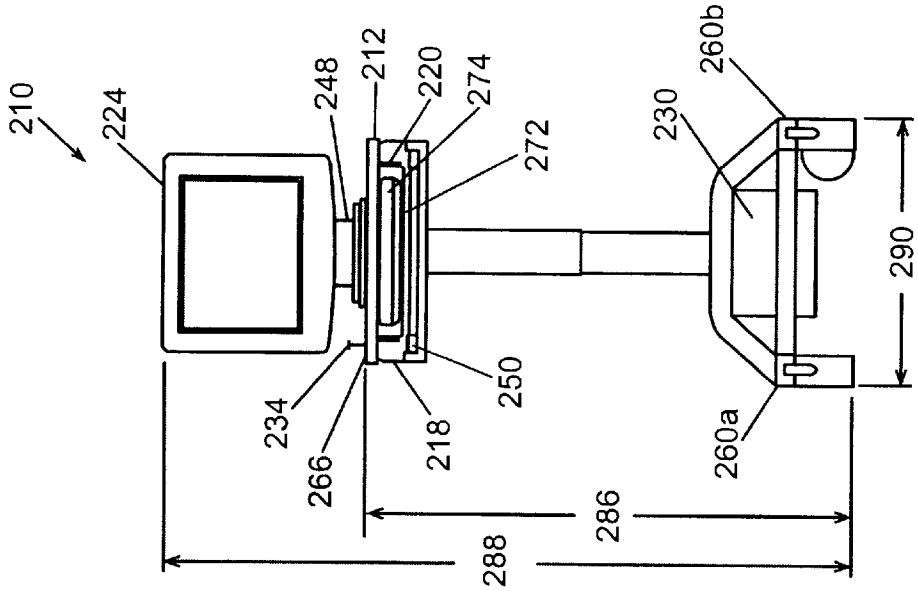

Fig. 12C

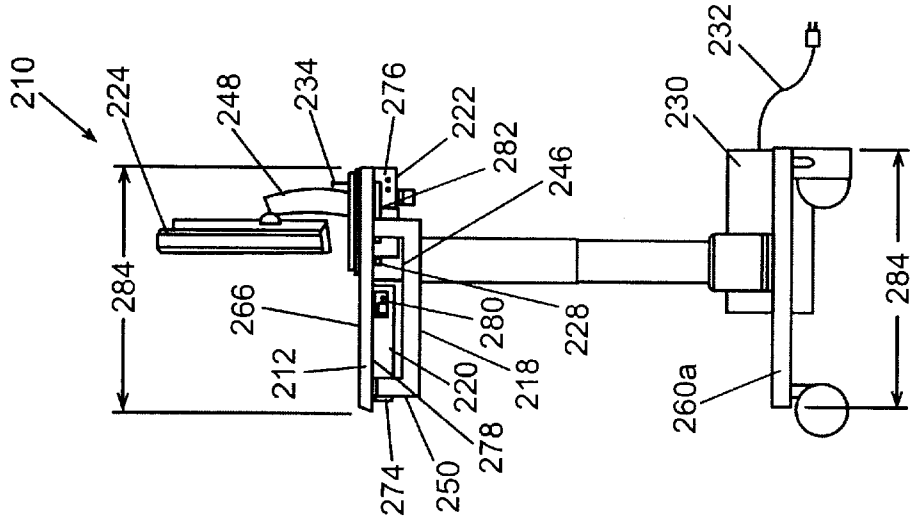

Fig. 12B

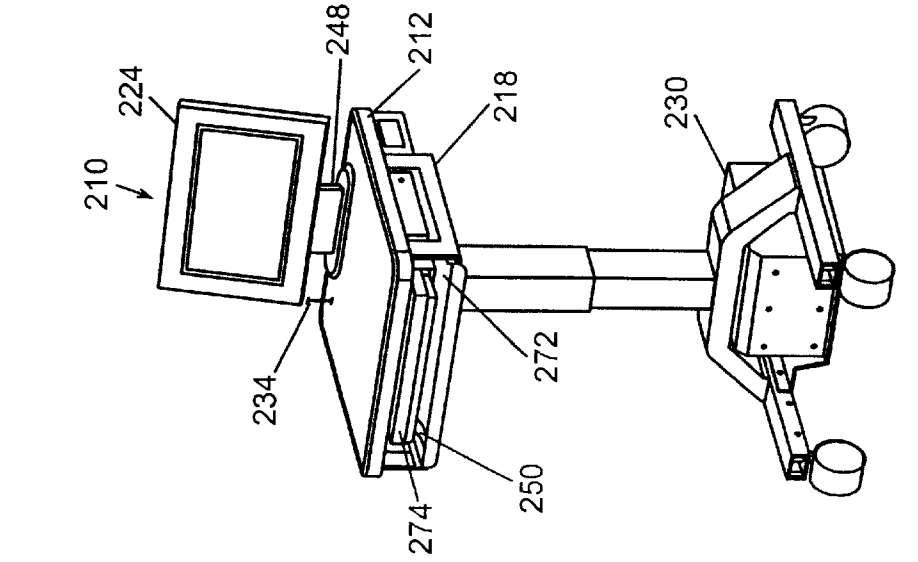

Fig. 12A

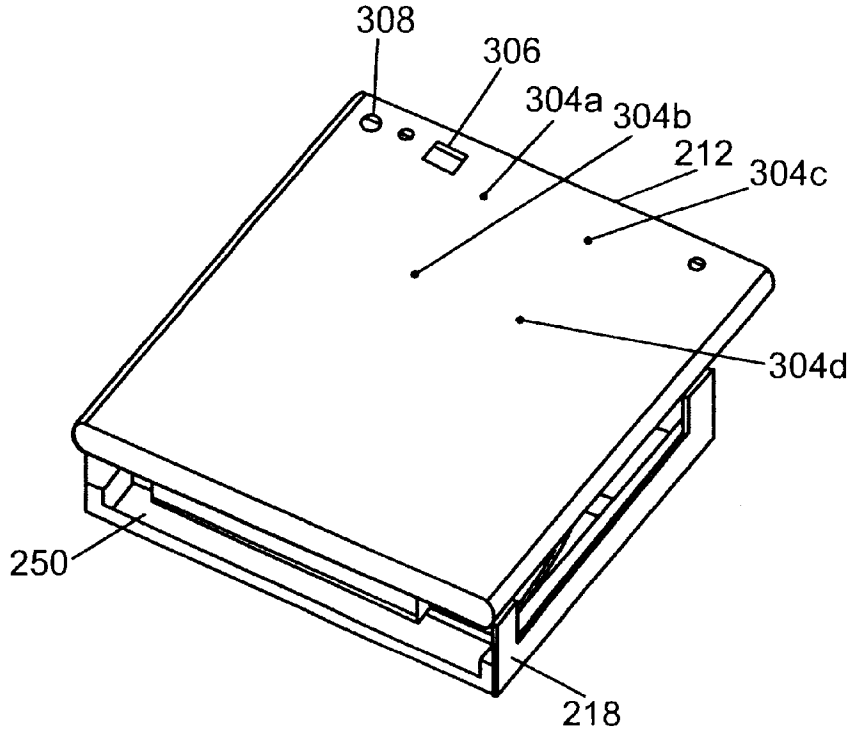

Fig. 13A

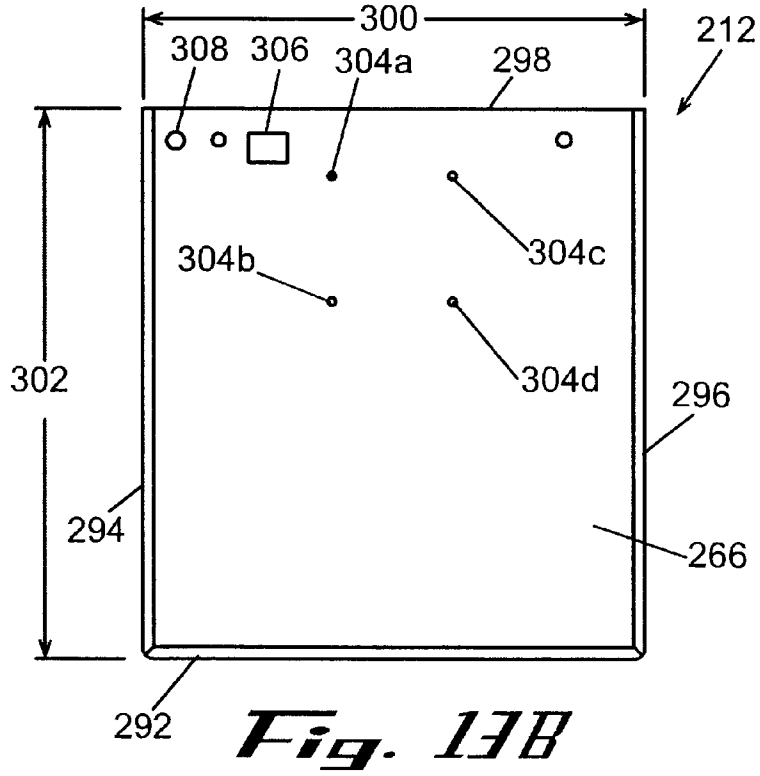

Fig. 13B

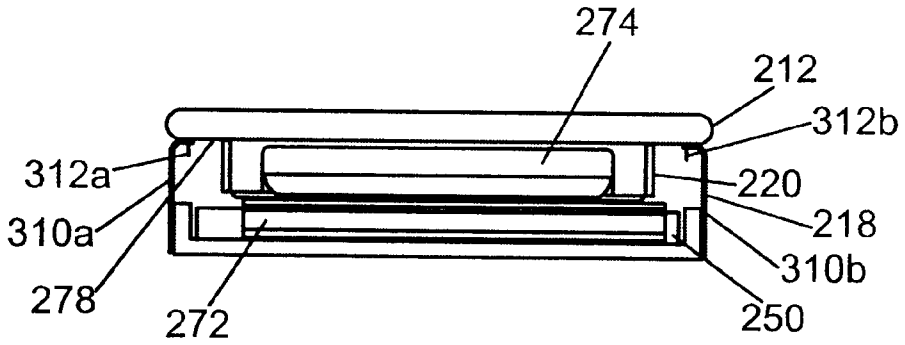

Fig. 13C

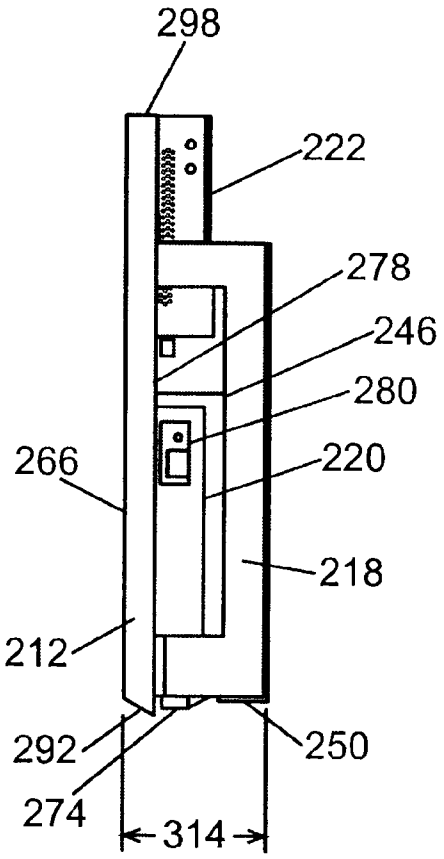

Fig. 13D

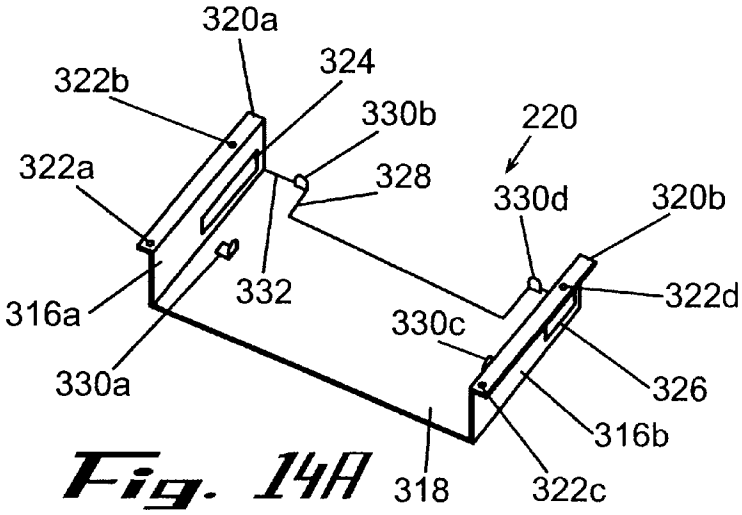

Fig. 14A

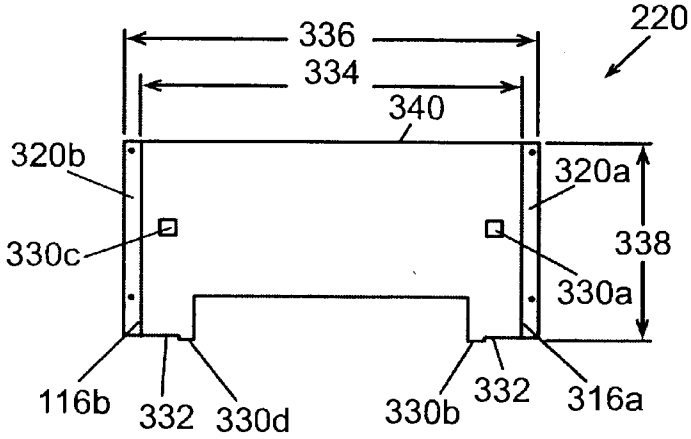

Fig. 14B

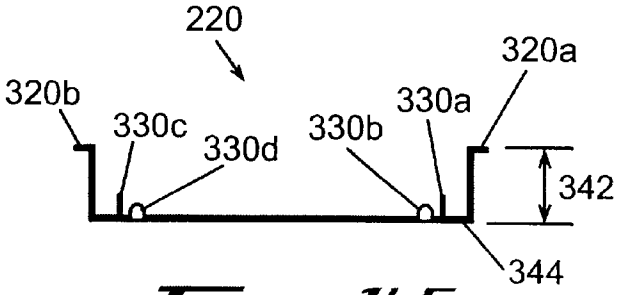

Fig. 14C

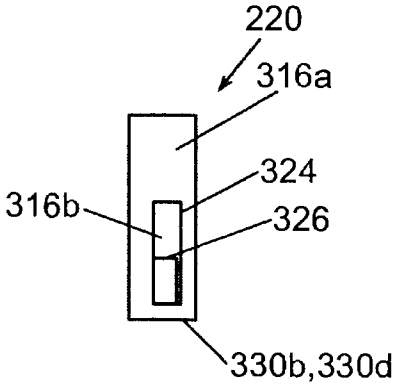

Fig. 14D

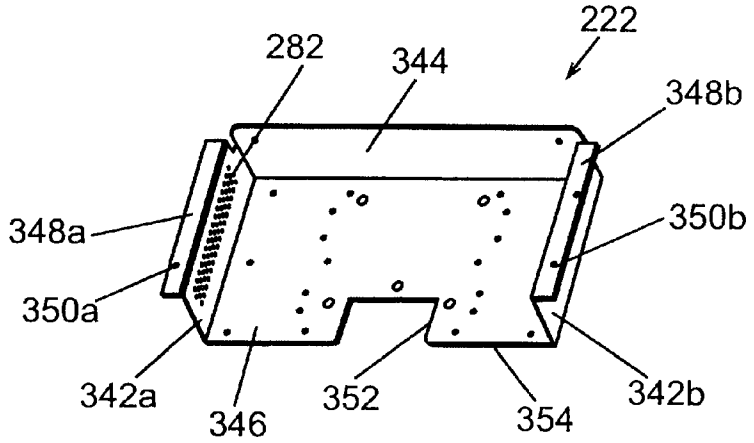

Fig. 15A

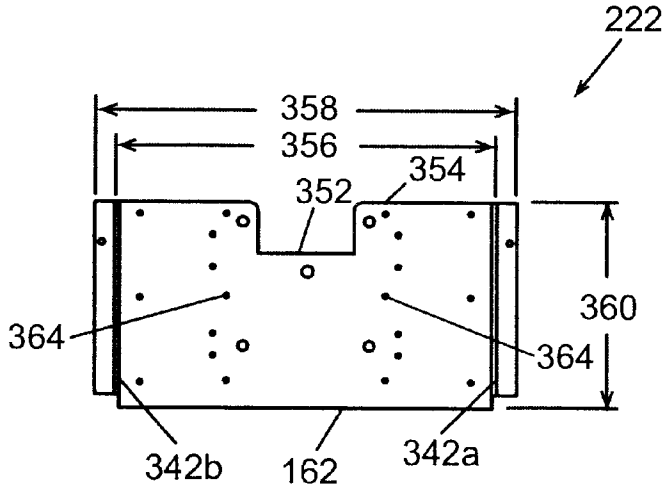

Fig. 15B

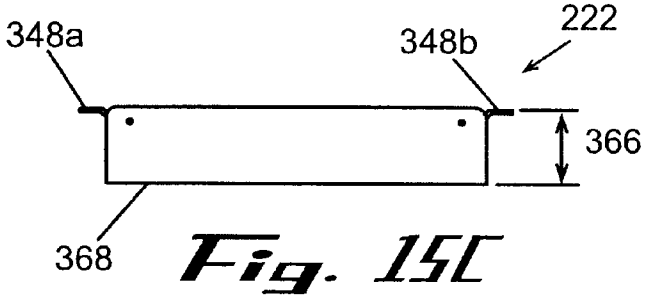

Fig. 15C

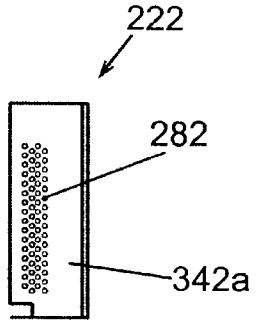

Fig. 15D

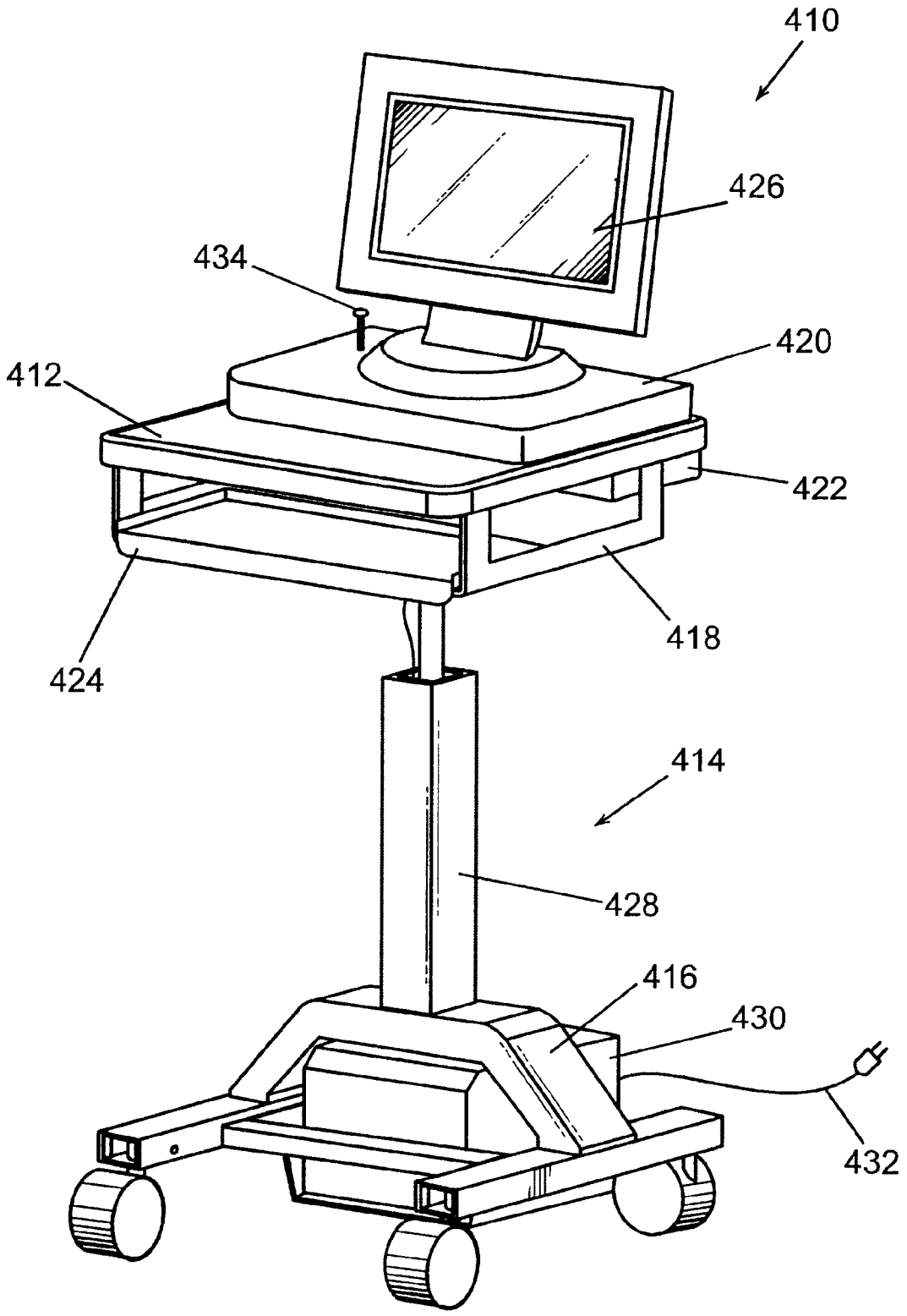

Fig. 16

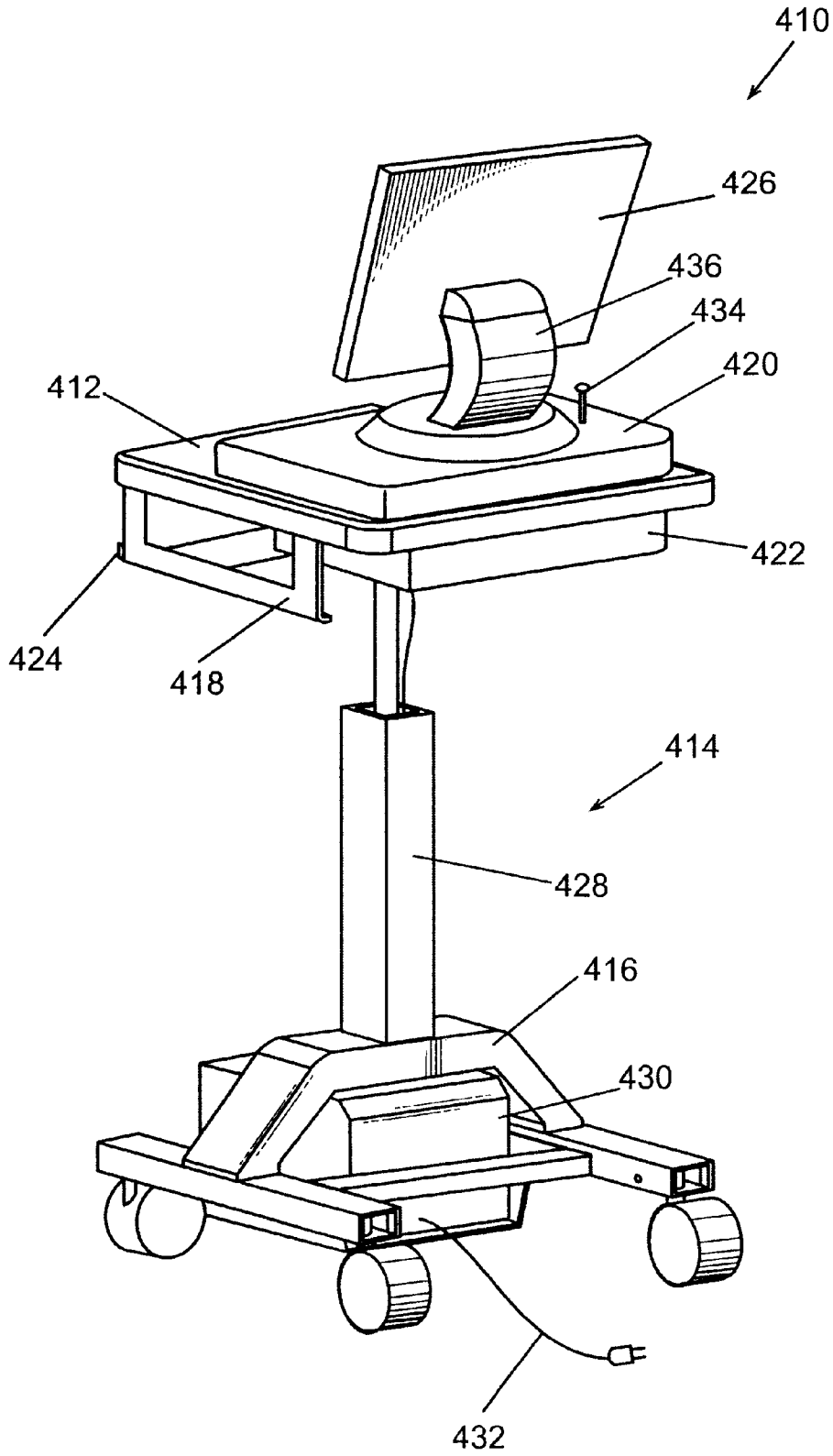

Fig. 11

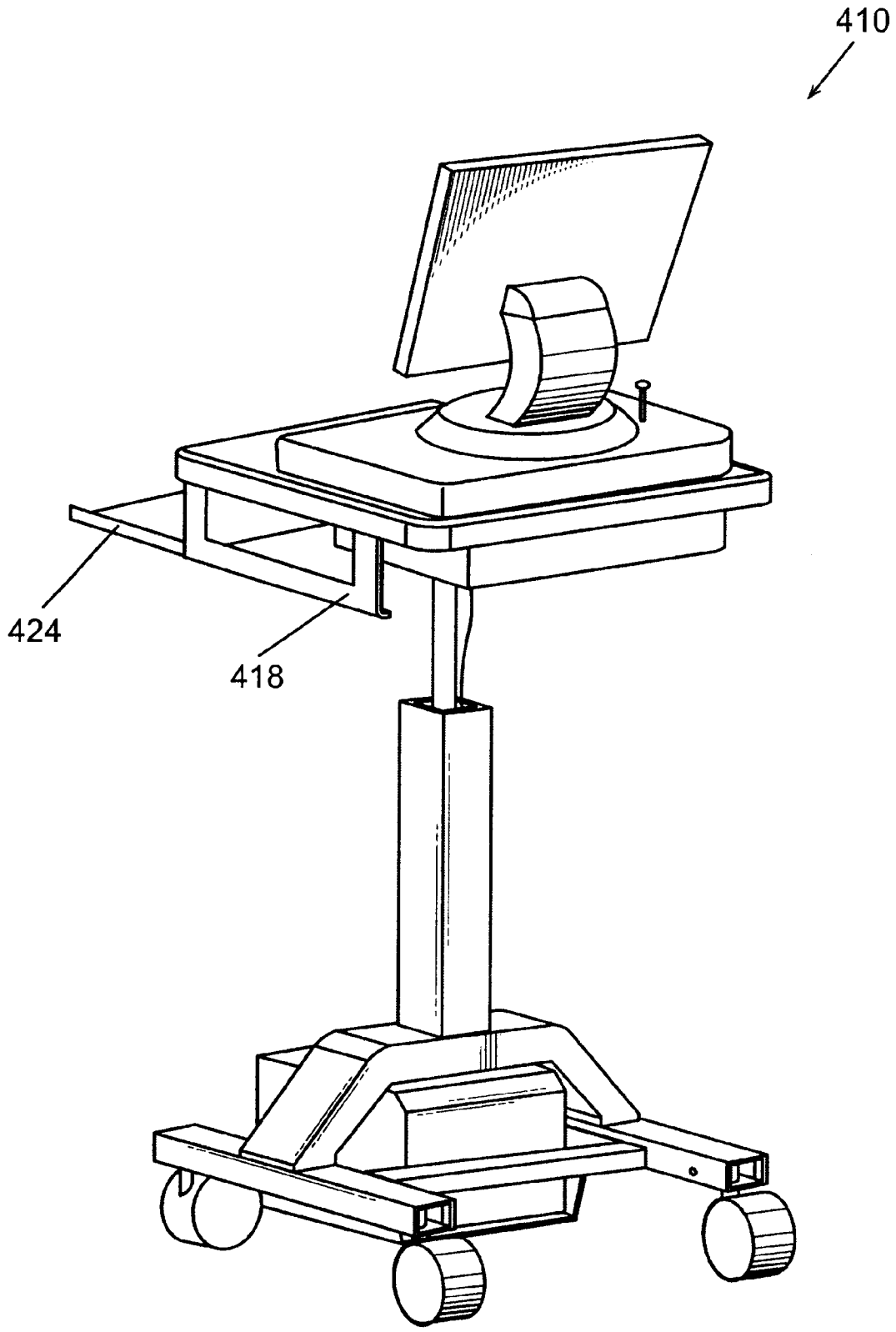

Fig. 18

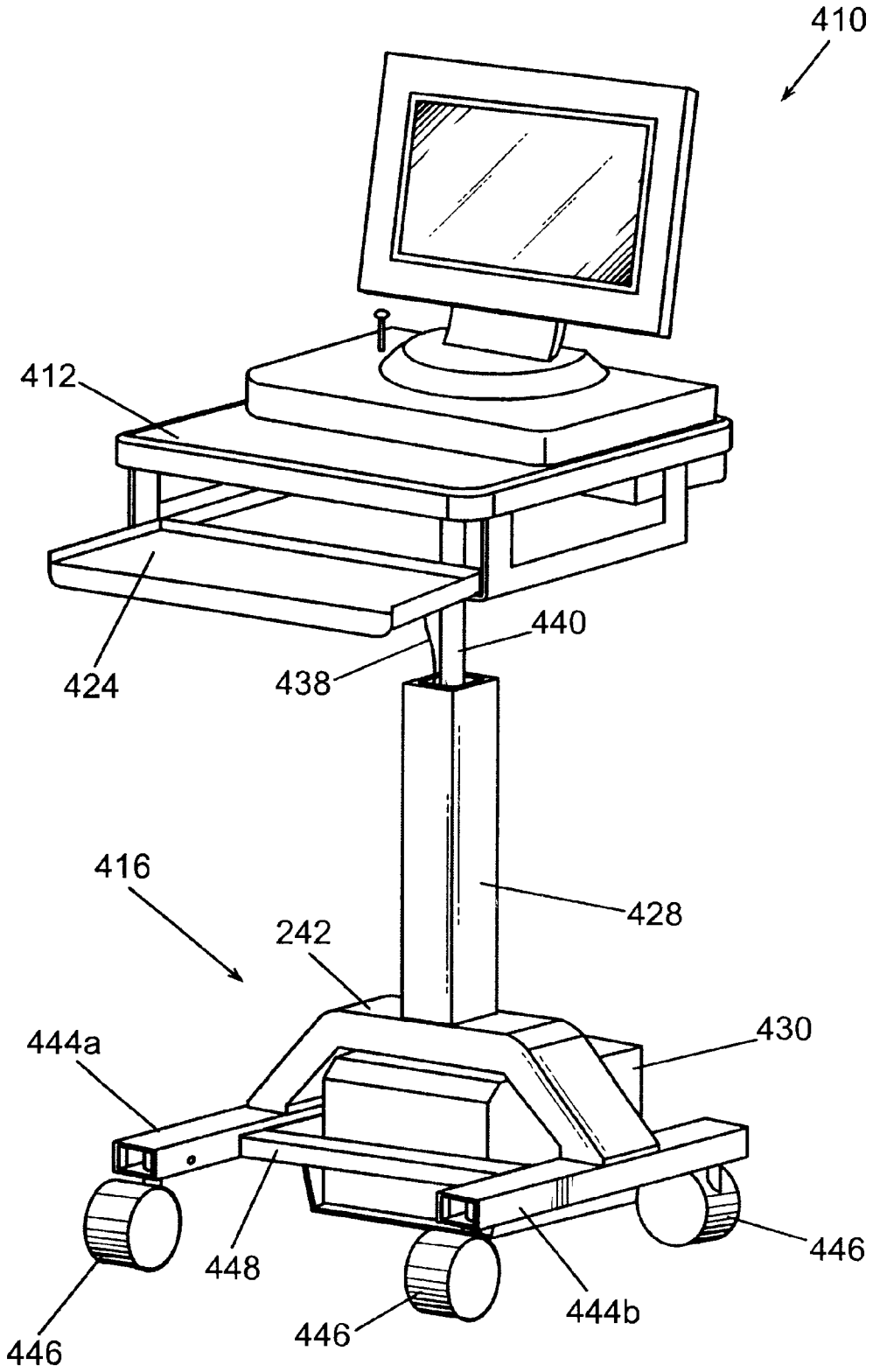

Fig. 19

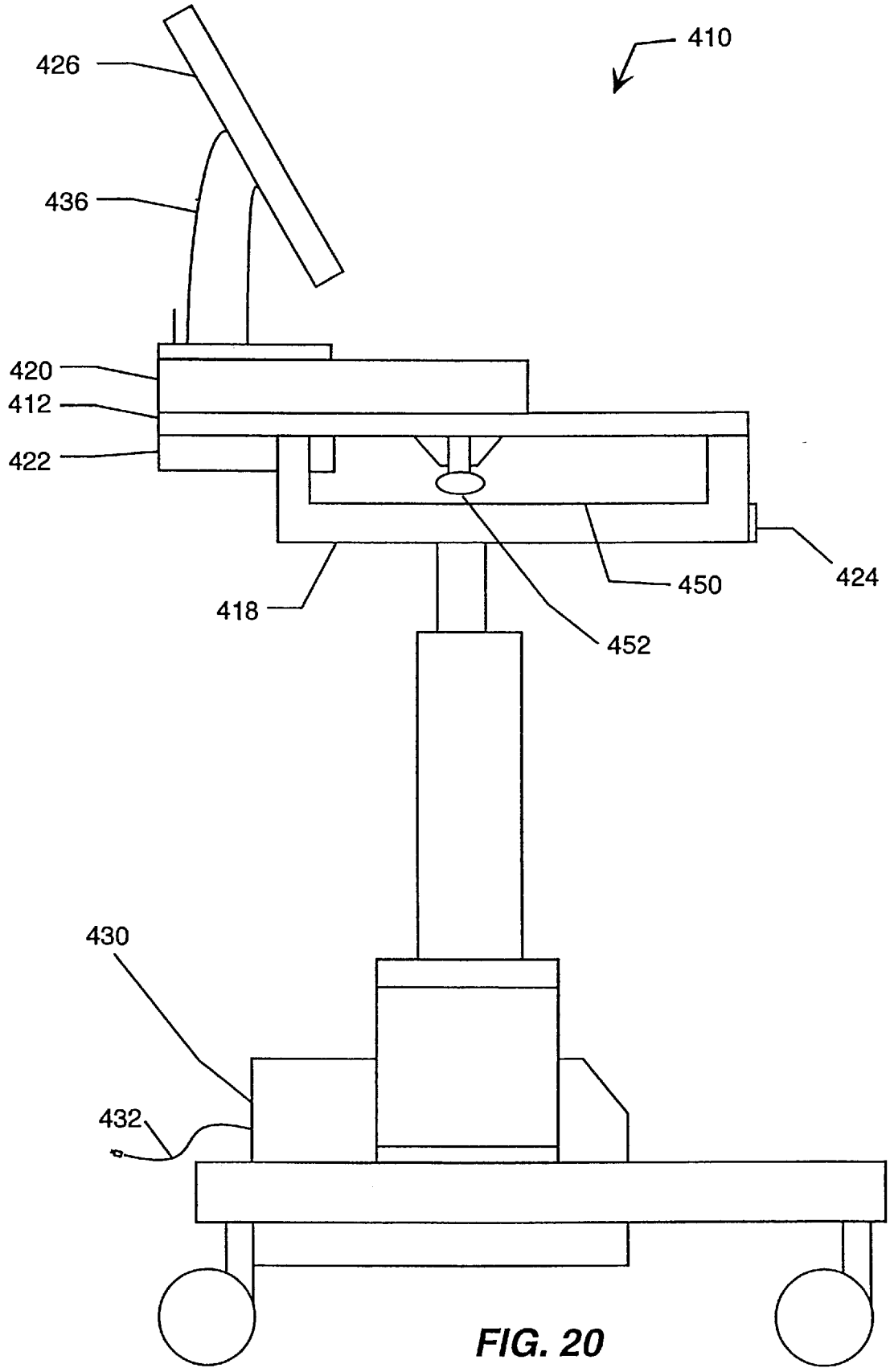

FIG. 20

MOBILE CLINICAL WORKSTATION

This application is a continuation of U.S. patent application Ser. No. 09/397,817 entitled "Mobile Clinical Workstation" filed Sep. 17, 1999 which claims priority to U.S. Provisional Application Ser. No. 60/100,976 filed Sep. 18, 1998.

TECHNICAL FIELD

This invention relates to mobile workstations and, more particularly, to a mobile workstation that can include an adjustable-height horizontal tray, a pull-out keyboard tray, a vertically-mounted docking station mounted to the tray, a computer terminal mounted beneath the tray, a display screen mounted to the horizontal tray, and a power unit.

BACKGROUND OF THE INVENTION

Wireless computer terminals are particularly well-suited to medical care environments, such as hospitals, doctors' offices, and nursing homes. Here, wireless computer terminals offer a great advantage by replacing the conventional clipboard hanging from a patient's bed frame or examination table with a wireless computer terminal that uses radio-frequency transmissions to communicate with a distributed computer network. These wireless computer terminals bring bedside medical care into the information age by computerizing medical charts.

A wireless computer terminal is typically used to post and retrieve the information that was traditionally posted on a bed-side clipboard, such as the patient's prescriptions, vital signs, receipt of medications, scheduled tests, etc. This and other information is now automatically communicated between the wireless computer terminal and a distributed patient-care computer network. A medical practitioner making the rounds, such as a doctor or nurse, usually picks up the wireless computer terminal from a fixed storage location before visiting the patient and takes the terminal into the patient's room. The practitioner then performs the indicated tasks and enters any relevant information into the wireless computer terminal, such as test results, vital signs, observations, and the like. When the visit with the patient is over, the practitioner usually returns the wireless computer terminal to its storage location.

Deploying a wireless computer terminal in this type of medical care environment presents several challenges. First, the wireless computer terminal should be stored near the patient's hospital or examination room for easy access by the medical practitioner. Second, the wireless computer terminal should be kept secure to prevent theft or tampering. Third, the wireless computer terminal should be easily accessible with one hand because a medical practitioner often has the other hand occupied, for example with a tray of medications, a medical instrument, or the like. Fourth, the battery inside a wireless terminal should be kept charged.

To address these needs, wireless computer terminals have been deployed in conjunction with wall-mounted cradles or docking stations located outside of patient hospital rooms. The wall-mounted cradle includes a key or electronic lock for selectively securing the computer terminal in the cradle. For example, the cradle may include a vertically movable leveling tray that allows the wireless terminal to be easily removed from, and replaced for storage within, the cradle with one hand using a push-down-and-tilt motion. A locking mechanism selectively prevents the leveling tray from moving vertically. A battery charger connected to an AC power supply charges the computer terminal's battery while the terminal is stored within the cradle.

These wall-mounted cradles work well but have a number of drawbacks. In particular, a separate wall-mounted cradle with an associated wireless computer terminal is typically located outside each hospital room. This results in a relatively large number of cradles and associated terminals, with each terminal sitting idle most of the day. Purchasing such a large number of cradles and associated terminals is expensive. In addition, once a practitioner removes the terminal from the cradle and takes it into the patient's hospital room, there may no place to conveniently store the terminal inside the hospital room. The practitioner may have to step back outside the patient's room to return the terminal to the cradle if both hands are needed for another activity during the visit, such as making the bed, assisting the patient to get out of bed, dressing a wound, or some other activity.

In another attempt to address some of the needs of medical practitioners, a mobile cart has been deployed in conjunction with a laptop computer. The mobile cart includes a horizontal tray with an upper surface on which the laptop computer resides. The laptop computer is typically secured on the mobile cart with a KENSINGTON lock (i.e., a cylinder-type key-operated mechanical lock). This mobile cart with an attached laptop computer has some advantages, but it also has a number of drawbacks. Physically walking back and forth from the patient's bedside to the mobile cart to enter patient information into the computer can be inconvenient. In many cases, a removable computer terminal that can be carried over to the patient's bedside would be more convenient. A removable computer terminal more closely resembles a conventional clipboard chart, which may be preferred by practitioners who have grown accustomed to clipboard charts.

In the previous mobile cart design, however, the practitioner must manually unlock the KENSINGTON lock to remove the laptop computer. This can be inconvenient, particularly when the medical practitioner is holding other items, such medical instruments. The KENSINGTON lock itself, which typically dangles from a cable connected to the computer, can be an annoyance. In addition, the location of the laptop computer on the surface of the cart occupies this space, which might be better used as a workspace for the practitioner to make notes, carry instruments, place medications, and so forth. The laptop computer also has a number of limitations. For example, the computer's battery life is typically about two to three hours, and recharging the battery typically requires plugging the laptop computer's power cord into an AC outlet for several hours. Plugging the laptop computer in for recharging typically idles the mobile cart for this period.

There is, therefore, a need for an improved docking station for a wireless computer terminal. Specifically, there is a need for a docking station that eliminates the need for a wall-mounted cradle and an associated wireless computer terminal located outside each patient hospital room. There is a further need for a mobile cart and associated computer terminal that is more convenient to use, has increased workspace, and has increased battery life.

SUMMARY OF THE INVENTION

The present invention meets the needs described above in a mobile workstation that includes a wheeled chassis, an adjustable-height horizontal tray, and a vertically-mounted docking station supported by the chassis or the horizontal tray. A medical practitioner making the rounds can push the mobile workstation from room to room and use the same computer terminal when attending each patient. An

extended-life battery allows the mobile workstation to be used for an entire shift before recharging. The mobile workstation thus eliminates the need for locating a wall-mounted cradle and an associated wireless computer terminal outside each patient's room. Because the docking station is vertically mounted, the terminal does not occupy the top surface of the horizontal tray, which allows this area to be used as a work surface.

When a docking station is used, a vertically movable leveling tray allows the wireless terminal to be easily removed from, and replaced for storage within, the docking station with one hand. An electronic or key lock allows the docking station to be easily locked and unlocked with one hand. When a docking station is not used, the terminal may be mounted to the top or bottom side of the tray.

The docking station typically includes an elongate dimension and a relatively slender dimension, and the tray supports the docking station with the elongate dimension substantially vertical and the slender dimension substantially horizontal. The bracket may be tiltably connected to the tray for rotating the docking station relative to the tray. A clutch connecting the tiltable bracket to the tray maintains the docking station in a number of selectable rotational positions relative to the tray.

The docking station typically includes a retainer for holding the device in the docking station. The docking station also includes a restraining member movable from an open position to a closed position so that the device may be removed from the docking station when the restraining member is in the open position, and so that the device is resiliently restrained in the docking station when the restraining member is in the closed position. For example, the retainer may include two spaced-apart arms for receiving a first side of a computer terminal, and the restraining member may include a leveling tray for resiliently supporting a second side opposite the first side of the computer terminal. The docking station may also include a lock movable from a release position to an interference position to positively restrain the computer terminal in the docking station. In this case, the docking station also includes an unlocking device for selectively moving the lock from the interference position to the release position to allow the computer terminal to be removed from the docking station.

In an alternative embodiment, the mobile workstation includes a wheeled chassis and a tray supported by the chassis. The tray has an upper surface defining a substantially horizontal work surface. The mobile workstation also includes a bracket mounted adjacent to the work surface for supporting a docking station for holding a device, such as a computer terminal. The device typically includes a display screen, and the docking station supports the device with the display screen in a substantially vertical position above the work surface. The mobile workstation may also include a pull-out keyboard tray supported adjacent to a lower surface of the tray.

Another alternative configuration of a mobile workstation includes a wheeled chassis, an adjustable-height horizontal tray, a wireless computer terminal supported by the chassis or the horizontal tray, and a power unit supported on the chassis. The tray has an upper surface defining a substantially horizontal work surface. The mobile workstation also includes a front mounting bracket mounted beneath the work surface for supporting a device, such as a wireless computer terminal. The device typically includes or attaches to a display screen, with the display screen above and towards the rear of the work surface. The mobile workstation may also include a pull-out keyboard tray supported adjacent to a lower surface of the tray. The mobile workstation also includes a back mounting bracket mounted adjacent to and beneath the work surface for supporting a power converter. The power converter connects to a battery pack and provides power to the device and to the display screen.

For each alternative embodiment, the chassis of the mobile workstation includes a dolly assembly, a vertical beam having a first end connected to the dolly assembly and a second end connected to the tray, and a mechanism for altering the length of the vertical beam and maintaining the tray at a number of selectable distances from the dolly assembly. The chassis may also carry a power converter and a power unit including a rechargeable battery for supplying power to the device through the power converter while the device is supported within the docking station, and a battery charger connectable to an AC power source for charging the rechargeable battery. A power cord may connect the battery charger to the AC power source, and the power unit may include a power cord storage assembly operable for retracting the power cord when the power cord is not connected to the AC power source.

That the invention improves over the drawbacks of the prior art and how it accomplishes the advantages described above will become apparent from the following detailed description of the exemplary embodiments and the appended drawings and claims.

BRIEF DESCRIPTION OF THE DRAWINGS

FIG. **1** illustrates a mobile workstation including a docking station for a computer terminal in a typical environment, such as a patient's hospital room.

FIGS. **2A–2D** are a series of side views of the mobile workstation of FIG. **1** illustrating the operation of an adjustable-height horizontal tray and a tiltable docking station.

FIGS. **3A–3D** are a series of perspective views of the docking station forming part of the mobile workstation of FIG. **1** showing the push-down-and-tilt motion used to remove the wireless terminal from the docking station.

FIGS. **4A–4B** are perspective views of the mobile workstation of FIG. **1** showing the operation of a pull-out keyboard tray.

FIG. **5A** is a side view of the horizontal tray of the mobile workstation of FIG. **1** showing an access hole and a release lever for raising and lowering the horizontal tray.

FIG. **5B** is a perspective view of the horizontal tray of the mobile workstation of FIG. **1** showing an access hole and a release lever for raising and lowering the horizontal tray.

FIG. **6A** is a back view of the horizontal tray and mounting bracket of the mobile workstation of FIG. **1**.

FIG. **6B** is a reverse view of the mounting bracket of FIG. **6A**.

FIG. **7A** is an exploded view the mounting bracket of FIG. **6A** and associated clutch assemblies.

FIG. **7B** is a side view of a spring washer for the clutch assemblies.

FIG. **7C** is a perspective view of the spring washer of FIG. **7B**.

FIG. **8** illustrates a mobile workstation including a computer terminal and a display screen in a typical environment, such as a patient's hospital room.

FIGS. **9A–9D** are a series of side views of the mobile workstation of FIG. **8** illustrating the operation of an adjustable-height horizontal tray and a tiltable display screen.

FIGS. **10A–10B** are perspective views of the mobile workstation of FIG. **8** showing the operation of a pull-out keyboard tray.

FIG. **11A** is a side view of the horizontal tray of the mobile workstation of FIG. **8** showing an access opening and a release lever for raising and lowering the horizontal tray.

FIG. **11B** is a perspective view of the horizontal tray of the mobile workstation of FIG. **8** showing an access opening and a release lever for raising and lowering the horizontal tray.

FIG. **12A** is a perspective view of the mobile workstation of FIG. **8** showing the installation of the wireless computer terminal and the keyboard.

FIG. **12B** is a side view of the mobile workstation of FIG. **8** showing the installation of the wireless computer terminal, keyboard, and battery pack.

FIG. **12C** is a front view of the mobile workstation of FIG. **8** showing the installation of the wireless computer terminal and the keyboard.

FIG. **13A** is a perspective view of the horizontal tray and tray housing of the mobile workstation of FIG. **8**.

FIG. **13B** is a top view of the horizontal tray and mounting bracket of FIG. **13A**.

FIG. **13C** is a front view of the horizontal tray and mounting bracket of FIG. **13A** with an installed wireless computer terminal and keyboard.,

FIG. **13D** is a side view of the horizontal tray and mounting bracket of FIG. **13A** with an installed wireless computer terminal and keyboard.

FIG. **14A** is a perspective view of the front mounting bracket of the mobile workstation of FIG. **8**.

FIG. **14B** is a top view of the front mounting bracket of FIG. **14A**.

FIG. **14C** is a front view of the front mounting bracket of FIG. **14A**.

FIG. **14D** is a side view of the front mounting bracket of FIG. **14A**.

FIG. **15A** is a perspective view of the back mounting bracket of the mobile workstation of FIG. **8**.

FIG. **15B** is a top view of the back mounting bracket of FIG. **15A**.

FIG. **15C** is a front view of the back mounting bracket of FIG. **15A**.

FIG. **15D** is a side view of the back mounting bracket of FIG. **15A**.

FIG. **16** is a front perspective view of yet another embodiment of a mobile workstation.

FIG. **17** is a rear right side perspective view of the mobile workstation in FIG. **16**.

FIG. **18** is a rear right side perspective view of the mobile workstation in FIG. **16** with a pull-out keyboard tray in the extended position.

FIG. **19** is a front right side perspective view of the mobile workstation in FIG. **16** with the pull-out keyboard tray in the extended position.

FIG. **20** is a side view of the mobile workstation shown in FIG. **16**.

DETAILED DESCRIPTION OF THE DISCLOSED EMBODIMENTS

The present invention may be embodied in a mobile workstation that includes an adjustable-height horizontal tray and a vertically-mounted docking station mounted to the horizontal tray. The docking station removably supports a computer terminal having a display screen, which may also serve as a touch-sensitive input device, that can be easily seen and accessed when the computer terminal is stored within the docking station. The mobile workstation also includes a keyboard located on a pull-out keyboard tray mounted to the underside of the horizontal tray. The keyboard is connected to the computer terminal by way of the docking station, so that the keyboard is automatically connected to the computer terminal whenever the terminal is stored within the docking station.

A tiltable bracket mounts the docking station to the horizontal tray. A clutch assembly allows the angle of the bracket, and along with it the angle of the docking station and the computer terminal, to be adjusted to avoid glare on the terminal's display screen. A spring-mounted, vertically-movable leveling tray allows the wireless terminal to be easily removed from the docking station using a push-down-and-tilt motion. An electronic lock selectively prevents vertical movement of the leveling tray to secure the computer terminal within the docking station. The docking station may also include a key-operated lock, which may be used to unlock the docking station in the event of a power outage or if the electronic lock should fail.

The mobile workstation also carries a power converter and a power unit including an extended-life battery, a battery charger that connects to an AC power supply to charge the conventional battery located inside the computer terminal as well as the extended-life battery carried on the mobile workstation. The power converter converts electrical power supplied by the battery to a suitable electrical input source for the computer terminal and the terminal display. The rechargeable battery power supply increases the battery life of the computer terminal to about 8–12 hours, which allows use of the computer terminal for an extended time before having to fully recharge it. The power unit includes two status-indicator lights to indicate when the unit is operating on AC power and when the battery is low, and a seven-level battery status-indicator light. The power unit may also include a sensor that indicates when the battery is low.

With the docking station configuration described above, a medical practitioner making the rounds can push the mobile workstation from room to room and use the same computer terminal when attending each patient. The extended-life battery allows the mobile workstation to be used for an entire shift before recharging. The mobile workstation thus eliminates the need for locating a wall-mounted cradle and associated computer terminal outside each patient's room. Because the docking station is vertically mounted, the computer terminal does not occupy the top surface of the horizontal tray, which allows this area to be used as a work surface. The leveling tray allows the computer terminal to be easily removed from, and replaced for storage within, the docking station with one hand. The electronic lock allows the docking station to be easily locked and unlocked with one hand.

Another embodiment of the present invention may be embodied in a mobile workstation that includes an adjustable-height horizontal tray on a chassis, a vertically mounted display screen mounted above the horizontal tray, a wireless computer terminal and a power converter mounted underneath the horizontal tray, a pull-out keyboard tray mounted beneath the wireless computer terminal, and a power unit mounted to the chassis. The horizontal tray includes an underside front mounting bracket to support the wireless computer terminal, and a rear mounting bracket to

support the power converter. The front mounting bracket supports the wireless computer terminal adjacent to and beneath the horizontal tray, leaving the work surface of the horizontal tray available for other operator uses. The back mounting bracket or wiring tray supports the power converter adjacent to and beneath the horizontal tray so that the power converter easily connects to the wireless computer terminal. A tray housing mounted to the underside of the horizontal tray supports a pull-out keyboard tray so that a keyboard mounted within the pull-out tray does not interfere with the front mounting bracket or the rear mounting bracket. The keyboard communicates with the computer terminal through a conventional electrical connection so that the keyboard can be easily connected to the computer terminal whenever the wireless computer terminal is stored within the mobile workstation. The wireless computer terminal removably connects to the display screen that mounts to the top surface of the horizontal tray with a tiltable bracket.

The mobile workstation also carries a power unit including an extended-life battery and a battery charger that connects to an AC power supply to charge the conventional battery located inside or adjacent to the wireless computer terminal as well as the extended-life battery carried on the mobile workstation. Each battery connects to the power converter to supply power to the wireless computer terminal and the terminal display through the power converter. The rechargeable battery power supply increases the battery life of the computer terminal to about 8–12 hours, which allows use of the computer terminal for an extended time before having to fully recharge it. The power unit includes two status-indicator lights to indicate when the unit is operating on AC power and when the battery is low, and a seven-level battery status-indicator light. The power unit may also include a sensor that indicates when the battery is low.

Yet another embodiment of the present invention may include an adjustable-height horizontal tray on a chassis, a wireless computer terminal mounted above the horizontal tray, a display screen mounted above the wireless computer terminal, a pull-out keyboard tray mounted beneath the horizontal tray, and a power unit mounted to the chassis. The horizontal tray includes a mounting bracket to support the wireless computer terminal above the horizontal tray, leaving the part of the work surface of the horizontal tray available for other operator uses. A tray housing mounted to the underside of the horizontal tray supports a pull-out keyboard tray so that a keyboard mounted within the pull-out tray does not interfere with the bottom of the horizontal tray. The keyboard communicates with the computer terminal through a conventional electrical connection so that the keyboard can be easily connected to the computer terminal whenever the wireless computer terminal is stored within the mobile workstation. The wireless computer terminal removably connects to the display screen that mounts to the top surface of the horizontal tray with a tiltable bracket.

The mobile workstation also carries a power converter and a power unit including an extended-life battery and a battery charger that connects to an AC power supply to charge the conventional battery located inside or adjacent to the wireless computer terminal as well as the extended-life battery carried on the mobile workstation. Each battery connects to the power converter to supply power to the wireless computer terminal and the terminal display through the power converter. The rechargeable battery power supply increases the battery life of the computer terminal to about 8–12 hours, which allows use of the computer terminal for an extended time before having to fully recharge it. The power unit includes two status-indicator lights to indicate when the unit is operating on AC power and when the battery is low, and a seven-level battery status-indicator light. The power unit may also include a sensor that indicates when the battery is low.

With the wireless computer terminal configurations described above, a medical practitioner making the rounds can push the mobile workstation from room to room and use the same computer terminal when attending each patient. The extended-life battery allows the mobile workstation to be used for an entire shift before recharging. The mobile workstation thus eliminates the need for locating a wall-mounted cradle and associated computer terminal outside each patient's room. When the computer terminal is mounted beneath the horizontal tray, the computer terminal does not occupy the top surface of the horizontal tray, which allows this area to be used as a work surface. The front mounting bracket allows the computer terminal to be easily removed from, and replaced for storage within, the front mounting bracket. In the embodiment where the computer terminal is mounted above the horizontal tray, the computer terminal does not occupy the entire top surface of the horizontal tray, which allows the remaining area to be used as a work surface. In this configuration, the mounting bracket above the horizontal tray allows the computer terminal to be easily removed from, and replaced for storage within, the mounting bracket.

The wireless computer terminal in a mobile workstation can also communicate through a radio-frequency communication channel via a radio transmitter/receiver terminal antenna attached to the top of the horizontal tray. In this manner, the wireless computer terminal can exchange information with a computer network, such as a distributed patient-care computer network.

Those skilled in the art will appreciate that the mobile workstation could be configured to support a device other than a docking station or a wireless computer terminal, such as a medical instrument. For example, the mobile workstation could be configured to support an ultra-sound device used to view a fetus. The docking station or the wireless computer terminal could be removed from the mobile workstation, and a similarly sized ultra-sound device could be placed within the mobile workstation. The patient could then view the display screen of the mobile workstation to see the results of the ultra-scan procedure. Many other applications, both medical and non-medical, will become apparent to those skilled in the art from the examples described in this specification.

Turning now to the drawings, in which like numerals indicate like elements throughout the several figures, FIG. **1** illustrates a mobile workstation **10** in a typical environment, such as a patient's hospital room **5**. The mobile workstation **10** includes an adjustable-height horizontal tray **12** supported by a chassis **14**. The chassis **14** includes a dolly assembly **16** that allows an operator, such as a medical practitioner, to easily push the mobile workstation **10** from place to place. The horizontal tray **12** supports a docking station **18** that, in turn, removably supports a device, such as the wireless computer terminal **20** with a terminal display screen. The chassis **14** includes a vertical beam **22** connecting the horizontal tray **12** to the dolly assembly **16**.

The vertical beam **22** includes a gas-spring height adjustment mechanism for adjusting the length of the beam and, thus, the height of the horizontal tray **12** above the dolly assembly **14**. For example, the chassis **14** may be a model MPC2001 manufactured by JACO, Inc. with the standard

tray replaced by the horizontal tray **12** shown in FIG. **1**. Those skilled in the art will appreciate that other types of wheeled chassis would be suitable for this purpose. In addition, other types of height adjustment mechanisms would also be suitable, such as a rack and pinion mechanism, a cable and pulley mechanism, a ratchet mechanism, a ball screw mechanism, a removable pin and holes arrangement, and so forth. Nevertheless, a gas-spring height adjustment mechanism is preferred because it is easy operate and ergonomically desirable.

The mobile workstation **10** also carries a power unit **24** including a power converter, a battery charger, an extended-life battery, a power cord **26**, and a recoil mechanism that automatically recoils the power cord when the cord is not plugged into an AC outlet. The power converter converts power received from the power unit **24** to suitable power for the wireless computer terminal **20**. The power unit **24** is located on the lower end of the chassis **14**. For example, the power unit **24** may reside between two metal beams in the dolly assembly **16** at the lower end of the chassis **14**. The extended-life battery may be a 12-Volt sealed lead acid battery, and the power supply may be a 120-Volt AC to 16-Volt DC converter.

The power unit **24** typically includes a first status-indicator light to inform the user when the unit is running on AC power, a second status-indicator light to inform the user when the battery needs recharging, and a seven-level battery status-indicator light to inform the user about the power status of the battery. The power unit **24** may also include an alarm or audible indicator to inform the user when the extended-life battery power needs recharging. The extended-life battery can be recharged by connecting the plugging the power cord **26** into a standard 120-volt AC outlet. When not in use, the recoil mechanism retracts the power cord **26** into the power unit **24**.

The wireless computer terminal **20** typically includes a radio transmitter/receiver antenna for communicating over an approved radio frequency. In particular, the wireless computer terminal **20** may establish a radio-frequency communication channel **28** with a distributed patient-care computer network **30** through an antenna **32** connected to a network access point **34**. This network access point is typically located in an enclosure **36** located above the ceiling of the hospital room. The network access point **34**, in turn, allows the wireless computer terminal **20** to communicate with the distributed patient-care computer network **30**. For example, the network access point **34** may be a RANGE-LAN2 7500 Series Access Point manufactured by PROXIM, INC. of Mountain View, Calif.

FIGS. **2A–2D** are a series of side views of the mobile workstation **10** illustrating the operation of an adjustable-height horizontal tray **12** and the tiltable docking station **18**. FIG. **2A** shows the mobile workstation **10** with the height-adjustable horizontal tray **12** in a vertically lowered position. To raise the tray, the operator places his or her hand through an opening **40** in the side of the horizontal tray **12**. The operator then lifts a release lever **42**, which releases a stop in the gas-spring height adjustment mechanism in the vertical beam. The operator then raises or lowers the horizontal tray **12** while holding the release lever **42** in a raised position.

Assistance provided by the gas-spring height adjustment mechanism allows the operator to change the height of the horizontal tray **12** with little effort. Once the horizontal tray **12** is at a desired height, represented by the height shown in FIG. **2B**, the operator releases the lever **42**, which locks the tray at the desired height. With this type of mechanism, the operator can quickly and easily place the horizontal tray **12** at virtually any height within the adjustment range of the gas-spring height adjustment mechanism. The assistance provided by the gas-spring height adjustment is ergonomically desirable in that it avoids back strain or other lifting problems that could otherwise be encountered by operators using the mobile workstation **10**.

FIG. **2C** illustrates the mobile workstation **10** with the docking station **18** in a vertical position. A tiltable bracket **44** attaches the docking station **18** to the horizontal tray **12**. A clutch **46** in the tiltable bracket maintains the docking station **18** in a number of selectable rotational positions relative to the tray **12**. The rotational range of the tiltable bracket **44** is preferably about 30 degrees rearward from vertical. That is, the tiltable bracket **44** preferably allows the docking station **18** to be rotated from the position shown in FIG. **2C** to the position shown in FIG. **2D**. The tiltable bracket **44** could also be configured to allow the docking station **18** to rotate forward through a similar rotational range.

It should be understood that the term "substantially vertical" may include a range about a strictly vertical orientation, represented by the 30 degree range illustrated by FIGS. **2C–D**. For example, the term "substantially vertical" includes configurations in which the bracket **44** maintains the docking station **18** in a strictly vertical orientation, or at a fixed rotational orientation with a vertical component, or within a range of rotational orientations including orientations that include vertical components. Alternatively, the docking station **18** could be supported in a substantially horizontal position, for example by a drawer or pull-out tray located above or under the horizontal tray **12**. Other locations for the docking station **18** may be preferred in certain environments. For example, the docking station could be mounted to the side of the horizontal tray **12**, to the underside of the horizontal tray **12**, to the dolly assembly **16**, to the vertical beam **22**, and so forth.

The clutch **46** imparts sufficient rotational resistance to maintain the docking station **18**, with an associated computer terminal **20**, at any of the rotational aspects within the rotational range defined by the tiltable bracket **44**. At the same time, the rotational resistance imparted by the clutch **46** is pliant enough to allow the operator to change the rotational orientation of the docking station **18** with one hand. For example, the operator may easily adjust the angle of the docking station **18** to avoid glare on the display screen of the computer terminal **20**. The tiltable bracket **44** and the clutch **46** are described in greater detail with reference to FIGS. **6A–B** and **7A–C** below.

FIGS. **3A–3D** are a series of perspective views of the docking station **18** and an associated wireless computer terminal **20** showing the push-down-and-tilt motion used to remove the terminal from the docking station. The docking station **20** includes a base **50**, a back plane **52**, and two spaced-apart retaining arms **54** and **56**. When the computer terminal **20** is located in the docking station, the retaining arms **54** and **56** support the top side **62** of the terminal. The base **50** includes a leveling tray **58** with a rubber cushion **60** for receiving the bottom side of the computer terminal **20**. The rubber cushion **60** includes raised collars on either end that prevent the computer terminal **20** from being removed from the docking station **18** when the leveling tray **58** is locked in the upper position, as shown in FIG. **3A**.

The docking station **18** includes a control panel **62** having a keypad **64**, typically with four keys. The docking station **18** may be configured so that the keypad **64** operates as an

electronic combination lock. The leveling tray **58** can be depressed when the docking station is unlocked and, when the docking station **18** is locked, the leveling tray **58** cannot be depressed. The docking station **18** may also include a manual key lock that may be used to lock and unlock the docking station in the event of a power outage or a malfunction of the electronic lock.

The control panel **62** may also include status lights **64***a–c* that indicate status information regarding the docking station **18**. For example, these status lights typically indicate whether the docking station is locked, whether power is on, and provide status information while a user is configuring the docking station with passwords. A touch-pin battery charging terminal **68** or other conventional electrical connection located in the leveling tray **58** may be used to charge a battery within the computer terminal **20** while the terminal is stored within the docking station **18**. This battery charging terminal, in turn, is connected to the power unit **24**. The power unit includes the power cord **26**, which may be plugged into a standard 120 Volt AC outlet. In addition, the docking station **18** may include a communication interface, such as an optical interface, for communicating data between the computer terminal **20** and the docking station **18** while the terminal is stored within the docking station. This allows the computer terminal **20** to communicate with the keypad **64** and/or an optional keyboard that plugs into the docking station **18**.

To remove the computer terminal **20**, an operator first unlocks the docking station **18** and then places his or her hand on the top side **62** of the terminal and pushes downward. Provided that the docking station **18** is unlocked, this motion depresses the leveling tray **58**, as shown in FIG. **3**B. The operator then tilts the terminal **20** forward, as shown in FIG. **3**C, and removes the terminal **20**, as shown in FIG. **3**D. An example of a suitable docking station is described in commonly owned U.S. patent application Ser. No. 08/841,496, entitled "Cradle For Holding A Device," filed Apr. 23, 1997, which is incorporated into this specification by reference.

FIGS. **4**A–B are perspective views of the mobile workstation **10** showing the operation of a pull-out keyboard tray **70**, which is supported by the underside of the horizontal tray **12**. The pull-out keyboard tray **70** slides from an inner position, shown in FIG. **4**A, to an outer position, shown in FIG. **4**B. A keyboard mounted on the keyboard tray **70** typically plugs into the docking station **18**, which communicates keystrokes with the computer terminal **20** by way of a conventional electrical connection. This allows an operator to easily remove the computer terminal **20** from the docking station **18**.

In FIGS. **4**A–**4**B, the top portion of a rectangular cover for the vertical beam **22** has been removed, showing an underlying shaft **72** and a power cable **73** connecting the power unit **24** to the docking station **18**. This shaft **72** connects to the gas-spring height adjustment mechanism **74** that allows adjustment of the height of the horizontal tray **12**. The gas-spring height adjustment mechanism **74**, which is located at the bottom of the vertical beam **22**, sits on top of the dolly assembly **16**. This dolly assembly includes an arched cross-beam **76** that connects to two horizontal runner beams **78***a–b*. Two casters, represented by the caster **80**, are connected to the bottom sides of each horizontal runner beam **78***a–b*. The power unit **24** is mounted below the arched cross beam **76** to an arched support plate **82**, which connects between the horizontal runner beams **78***a–b*.

FIGS. **4**A–B also show that the top side of the horizontal tray **12** defines a substantially horizontal work surface **86**, which is bordered by a raised edge guard **88**. The rear edge of the horizontal tray **12** includes a recess **90** for the docking station **18**, which defines an elongate dimension **92** and a relatively slender dimension **94**. That is, the docking station **18** is substantially taller than it is thick. The tiltable mounting bracket **44** supports the docking station **18** so that the elongate dimension **92** is substantially vertical and the relatively slender dimension **94** is substantially horizontal. Because the docking station **18** is vertically mounted, the terminal **20** does not occupy the top surface **86** of the horizontal tray **12**, which allows this area to be used as a work surface. In addition, the computer terminal **20** typically includes a display screen **96**, and the docking station **18** supports the terminal with the display screen substantially perpendicular to and above the top surface **86** of the horizontal tray **12** for easy viewing. It will be understood that the term "substantially perpendicular" includes a range of orientations because the docking station **18** may rotate through a rotational range about a strictly perpendicular orientation.

FIG. **5**A is a side view of the horizontal tray **12** showing the access hole **40** and the release lever **42** for raising and lowering the horizontal tray **12**. The release lever **42** operates the gas-spring height adjustment lever, which is shown best in FIG. **4**A. FIG. **5**A also shows the end of the pull-out keyboard tray **70**, which includes a lip **98** to aid in pulling the keyboard tray out and pushing it back in.

FIG. **5**B is a perspective view of the horizontal tray **12** showing the access hole **40** and the release lever **42** for raising and lowering the horizontal tray **12**. FIG. **5**B also shows the top surface **86**, the edge guard **88**, and the recess **90** of the horizontal tray **12**. The top surface **86** of the horizontal tray **12** is preferably constructed from a nonporous material, such as plastic or metal. For example, the horizontal tray **12** may be constructed from a flat wooden, particle board, or composite substrate covered with a plastic overlay defining the top surface **86** and the edge guard **88**. The plastic overlay may be created with an injection mold, and then glued to the substrate. The bracket **44** includes mounting brackets **102***a–b* and a back plane **100** supporting the docking station. The back plane **100** may be formed from a heavy gauge sheet metal, fiberglass, or composite. The sides **103** and bottom **104** the horizontal tray **12** may be formed from sheet metal.

FIG. **6**A is a back view, and FIG. **6**B is a reverse view, of the horizontal tray **12** showing the tiltable bracket **44**, including the back plane **100** and mounting brackets **102***a–b*. The mounting brackets **102***a–b* are bolted to the rear side of the horizontal tray **12** and extend into the recess **90** so that the back plane **100** is approximately flush with the rear side of the horizontal tray **12** when the back plane is in a vertical position. The mounting brackets **102***a–b* each include an arcuate slot **106***a–b* to allow the back plane **100** to rotate through a rotational range with respect to the mounting brackets. For example, that rotational range is approximately 30 degrees in the configuration shown in FIGS. **6**A–B. Clutch assemblies **46***a–b* at the connections between the mounting brackets **102***a–b* the back plane **100** support the back plane **100**, with an associated docking station **18** and computer terminal **20**, in virtually any rotational orientation within the rotational range defined by the slots **106***a–b*.

FIG. **7**A is an exploded view the mounting brackets **102***a–b* and the clutch assemblies **46***a–b*. Referring to the clutch assembly **46***b* for illustration purposes, this assembly includes two identical connection assemblies **110***a–b*. Referring now to the connection assembly **110***a* for illustration purposes, this assembly includes a threaded standoff **112**

including a collar that passes through a hole in the support frame **114** of the back plane **100** and a rim that catches on the support frame. The threaded standoff **112** is preferably press-fitted into the hole in the support frame **114**.

The connection assembly **110***a* also includes a nylon shoulder washer **116** including a collar that passes through a hole in the mounting bracket **44**b and a rim that catches on the mounting bracket. The collar of nylon shoulder washer **116** is sized to snugly receive the threaded standoff **112**. The connection assembly **110***a* also includes a nylon washer **118**, two steel washers **120** and **122**, and a steel spring washer **124** positioned for compression between the steel washers. A bolt **126** passes through these washers and screws into the threaded standoff **112**. The bolt **126** may be tightened into the threaded standoff **112** to compress the steel spring washer **124** and provide a desired amount of resistance in the connection assembly **110***a*.

FIG. **7**B is a side view of the spring washer **124**, and FIG. **7**C is a perspective view of the spring washer. These figures show that the spring washer **124** has a slight conical shape that is raised in the middle with respect to the outer perimeter. This type of spring washer provides a compact and inexpensive mechanism for imparting an adjustable amount of resistance in the connection assembly **110***a*. Those skilled in the art will appreciate that other types of clutch assemblies could be employed in embodiments of the invention.

Another embodiment of a mobile workstation is shown in FIG. **8** illustrates a mobile workstation **210** in a typical environment, such as a patient's hospital room **205**. The mobile workstation **210** includes an adjustable-height horizontal tray **212** supported by a chassis **214**. The chassis **214** includes a dolly assembly **216** that allows an operator, such as a medical practitioner, to easily push the mobile workstation **210** from place to place. The horizontal tray **212** includes an underside tray housing **218**, an underside front mounting bracket **220**, and an underside back mounting bracket **222** or wiring tray.

The tray housing **218** supports a keyboard (not shown) or keypad for a wireless computer terminal (not shown). The wireless computer terminal mounts within the front mounting bracket **220**. The back mounting bracket **222** or wiring tray supports a power converter (not shown) supplying power to the wireless computer terminal. A tiltable display screen **224** attaches to the top of the horizontal tray **212** while connecting to the wireless computer terminal. The back mounting bracket **222** or wiring tray can also support additional power converters for the display screen **224** or for other electrical devices associated with the mobile workstation **210**.

The chassis **214** includes a vertical beam **226** connecting the horizontal tray **212** to the dolly assembly **216**. The vertical beam **226** includes a gas-spring height adjustment mechanism (not shown) and a release lever **228** for adjusting the length of the beam **226** and, thus, the height of the horizontal tray **212** above the dolly assembly **216**. For example, the chassis **214** may be a model MPC2001 manufactured by JACO, Inc. with the standard tray replaced by the horizontal tray **212** shown in FIG. **8**. Those skilled in the art will appreciate that other types of wheeled chassis would be suitable for this purpose. In addition, other types of height adjustment mechanisms would also be suitable, such as a rack and pinion mechanism, a cable and pulley mechanism, a ratchet mechanism, a ball screw mechanism, a removable pin and holes arrangement, and so forth. Nevertheless, a gas-spring height adjustment mechanism **228** is preferred because it is easy operate and ergonomically desirable.

The mobile workstation **210** also carries a power converter (not shown) within the back mounting bracket **222** and a power unit **230** including a battery charger, an extended-life battery, a power cord **232**, and a recoil mechanism that can retract the power cord when the cord is not in use. The power unit **230** supplies power to the wireless computer terminal through the power converter. The power unit **230** is located on the lower end of the chassis **214**. For example, the power unit **230** may reside between two metal beams in the dolly assembly **216** at the lower end of the chassis **214**. A suitable power unit **230** is a 26 Amp-Hour battery providing a regulated 10–16 Volt output at 40 watts with an automatic low power cut-off. The extended-life battery may be a 12-Volt sealed lead acid battery, and the battery charger may be a 120-Volt AC to 16-Volt DC converter.

The power unit **230** typically includes a first status-indicator light to inform the user when the unit is operating off of AC power, a second status-indicator light to inform the user when the battery needs recharging, and a seven-level battery status-indicator light. The power unit **230** may also include a sound indicator that beeps to inform the user when the extended-life battery needs recharging. When plugged into an AC outlet, the battery charger will charge both the extended-life battery and operate the wireless computer terminal by supplying the power converter connected to the computer terminal. The extended-life battery can be recharged by plugging the power cord **232** into a standard 120-volt AC outlet. When not in use, the recoil mechanism can retract the power cord **232** into the power unit **230**.

The wireless computer terminal inside the mobile workstation **210** communicates through a radio transmitter/receiver terminal antenna **234** attached to the top of the horizontal tray **212**. The terminal antenna **234** is operable for communicating over an approved radio frequency. A suitable radio transmitter/receiver to mount to the wireless computer terminal is a Lucent Extended 802.11 radio with a cable for using an external antenna. A suitable terminal antenna **234** for mounting to the horizontal tray **212** is a whip antenna used in DOS VMT products (1380/1390, 1320/1330). In particular, the wireless computer terminal may establish a radio-frequency communication channel **236** with a distributed patient-care computer network **238** through an antenna **240** connected to a network access point **242**. This network access point **242** is typically located in an enclosure **244** located above the ceiling of the hospital room. The network access point **242**, in turn, allows the wireless computer terminal to communicate with the distributed patient-care computer network **238**. For example, the network access point **242** may be a RANGELAN2 7500 Series Access Point manufactured by PROXIM, INC. of Mountain View, Calif.

FIGS. **9**A–**9**D are a series of side views of the mobile workstation **210** illustrating the operation of an adjustable-height horizontal tray **212** and the display screen **224**. FIG. **9**A shows the mobile workstation **210** with the height-adjustable horizontal tray **212** in a vertically lowered position. To raise the tray **212**, the operator places his or her hand through an access opening **246** in the side of the tray housing **218**. The operator then lifts the release lever **228**, which releases a stop in the gas-spring height adjustment mechanism (not shown) in the vertical beam **226**. The operator then raises or lowers the horizontal tray **212** while holding the release lever **228** in a raised position.

Assistance provided by the gas-spring height adjustment mechanism allows the operator to change the height of the horizontal tray **212** with little effort. Once the horizontal tray

212 is at a desired height, represented by the height shown in FIG. 9B, the operator releases the lever 228, which locks the tray 212 at the desired height. With this type of mechanism, the operator can quickly and easily place the horizontal tray 212 at virtually any height within the adjustment range of the gas-spring height adjustment mechanism. The assistance provided by the gas-spring height adjustment is ergonomically desirable in that it avoids back strain or other lifting problems that could otherwise be encountered by operators using the mobile workstation 210.

FIG. 9C illustrates the mobile workstation 210 with the display screen 224 in a vertical position. A tiltable bracket 248 attaches the display screen 224 to the horizontal tray 212. The tiltable bracket 248 maintains the display screen 224 in a number of selectable rotational positions relative to the tray 212 so that the display screen 224 is in front of users for ease of visibility. The rotational range of the tiltable bracket 248 is preferably about 30 degrees rearward from vertical. That is, the tiltable bracket 248 preferably allows the display screen 224 to be rotated from the position shown in FIG. 9C to the position shown in FIG. 9D. The tiltable bracket 248 could also be configured to allow the display screen 224 to rotate forward through a similar rotational range.

It should be understood that the term "substantially vertical" may include a range about a strictly vertical orientation, represented by the 30 degree range illustrated by FIGS. 9C–9D. For example, the term "substantially vertical" includes configurations in which the bracket 248 maintains the display screen 224 in a strictly vertical orientation, or at a fixed rotational orientation with a vertical component, or within a range of rotational orientations including orientations that include vertical components. Alternatively, the display screen 224 could be supported in a substantially horizontal position, for example by a drawer or pull-out tray located above or under the horizontal tray 212. Other locations for the display screen 224 may be preferred in certain environments. For example, the display screen 224 could be mounted to the side of the horizontal tray 212, to the underside of the horizontal tray 212, to the dolly assembly 216, to the vertical beam 226, and so forth.

The tiltable bracket 248 imparts sufficient rotational resistance to maintain the display screen 224, with an associated computer terminal (not shown), at any of the rotational aspects within the rotational range defined by the tiltable bracket 248. At the same time, the rotational resistance imparted by the tiltable bracket 248 is pliant enough to allow the operator to change the rotational orientation of the display screen 224 with one hand. For example, the operator may easily adjust the angle of the display screen 224 to avoid glare on the display screen 224. A clutch mechanism similar to that discussed with reference to FIG. 7 may be used to allow selective rotation of the display screen 224.

FIGS. 10A–10B are perspective views of the mobile workstation 210 showing the operation of a pull-out keyboard tray 250, which is supported by the tray housing 218 attached to the underside of the horizontal tray 212. The pull-out keyboard tray 250 slides from an inner position, shown in FIG. 10A, to an outer position, shown in FIG. 10B, along conventional rollers (not shown) within a conventional roller guide slots (not shown). Typically, rollers mounted to the bottom side of the keyboard tray 250 fit within roller guide slots attached to the top side of the tray housing 218. A keyboard (not shown) fits within the pull-out keyboard tray 250. The pull-out keyboard tray 250 is to detent when fully extended away from the front edge of the tray housing 218, permitting the operator to type on the keyboard without the keyboard tray 250 sliding back into the tray housing 218. When the pull-out keyboard tray 250 is in the retracted position, the keyboard tray 250 will not slide out during movement or transport of the mobile workstation 210.

As shown in FIG. 10B, the pull-out keyboard tray 250 can be extended outward from the front end of the tray housing 218. The rollers on the bottom of the pull-out keyboard tray 250 permit the pull-out tray 250 to roll forward within the roller guide slots along the length of the top side of the tray housing 218. The roller guide slots have a physical stop at the front end of the tray housing 218. When a roller makes contact with the physical stop at the front end of the tray housing 218, the pull-out keyboard tray 250 cannot be extended any further from the front edge of the tray housing 218.

In FIGS. 10A–10B, the top portion of a rectangular cover for the vertical beam 226 has been removed, showing an underlying shaft 252 and a power cable 254 connecting the power unit 230 to the power converter (not shown). This shaft 252 connects to the gas-spring height adjustment mechanism 256 that allows adjustment of the height of the horizontal tray 212. The gas-spring height adjustment mechanism 256, which is located at the bottom of the vertical beam 226, sits on top of the dolly assembly 216. This dolly assembly includes an arched cross-beam 258 that connects to two horizontal runner beams 260*a–b*. Two casters, represented by the caster 262, are connected to the bottom sides of each horizontal runner beam 260*a–b*. For example, a suitable size caster is a conventional 5" caster. The power unit 230 is mounted below the arched cross beam 258 with a support bracket 264, which connects between the horizontal runner beams 260*a–b*.

FIGS. 10A–10B also show that the top side 266 of the horizontal tray 212 defines a substantially horizontal work surface. The tiltable bracket 248 supports the display screen 224 so that the elongate dimension 268 is substantially vertical and the relatively slender dimension 270 is substantially horizontal. Because the display screen 224 is vertically mounted, the display screen 224 does not occupy a substantial portion of the top surface 266 of the horizontal tray 212, which allows this area to be used as a work surface. It will be understood that the term "substantially vertical" includes a range of orientations because the display screen 224 may rotate through a rotational range about a strictly perpendicular orientation.

FIG. 11A is a side view of the horizontal tray 212 and the attached tray housing 218 showing the access opening 246 and the release lever 228 for raising and lowering the horizontal tray 212. The release lever 228 operates the gas-spring height adjustment mechanism 256 previously shown in FIGS. 10A–10B. The access opening 246 in the side wall of the tray housing 218 provides convenient operator access to actuate the release lever 228.

FIG. 11B is a perspective view of the horizontal tray 212 showing the access opening 246 and the release lever 228 for raising and lowering the horizontal tray 212. Typically, the release lever 228 has a tee or a paddle on the end, so that an operator can conveniently actuate the release lever 228 thereby raising or lowering the gas-spring height adjustment mechanism 256.

FIG. 11B also shows the top surface 266 of the horizontal tray 212. The top surface 266 of the horizontal tray 212 is preferably constructed from a non-porous material, such as plastic or metal. For example, the horizontal tray 212 may be constructed from a flat wooden, particle board, or composite

substrate covered with a plastic overlay defining the top surface **266**. The plastic overlay may be created with an injection mold, and then glued to the substrate. Those skilled in the art will appreciate that other types of horizontal trays could be employed in embodiments of the invention.

FIGS. **12A–12C** are a series of detailed views of the mobile workstation **210** of FIG. **8**, with the display screen **224**, a keyboard **272**, a wireless computer terminal **274**, and a power unit **230**. FIG. **12A** is a perspective view of the mobile workstation **210** illustrated in FIG. **8**. FIG. **12B** is a side view of the mobile workstation **210** illustrated in FIG. **12A**. FIG. **12C** is a front view of the mobile workstation **210** illustrated in FIG. **12A**.

In FIG. **12A**, the mobile workstation **210** is shown with a display screen **224** mounted to the top surface of the horizontal tray **212**. A tiltable bracket **248** connects the display screen **224** to the top of the horizontal tray **212**. Conventional electrical connections (not shown) provide an interface between the wireless computer terminal **274** and the display screen **224**. A suitable display screen **224** is a flat panel LCD with a 14–15" TFT viewable screen, a minimum video resolution of 1024×768 pixels, a minimum 200 nit, and a DC power input. Those skilled in the art will appreciate that other types of display screens could be employed in embodiments of the invention, including those having touch performance screens.

As shown in FIG. **12B**, a front mounting bracket **220** mounts to the bottom side **278** of the horizontal tray **212**, and holds the computer terminal **274** substantially parallel to the bottom side **278** of the front portion of the horizontal tray **212**. The front mounting bracket **220** is sized to support the wireless computer terminal **274**, such as a laptop computer, within the front bracket **220** and adjacent to the bottom side of the horizontal tray **212**. The front mounting bracket **220** has an access window **280** in the side wall for operator access to various ports or interfaces in the side of the wireless computer terminal **274**.

The wireless computer terminal **274** may include a communication interface, such as an optical interface or a conventional electrical connection, for communicating data between the computer terminal **274** and the keyboard **272**. The communication interface between the keyboard **272** and the computer terminal **274** allow the keyboard **272** to communicate keystrokes to the computer terminal **274**. This type of operation permits an operator to easily remove the computer terminal **274** from the front mounting bracket **220**, or to remove the keyboard **272** from the keyboard tray **250**. As previously described in FIG. **8**, the wireless computer terminal **274** can then send signals through the terminal antenna **234** attached to the top surface **266** of the horizontal tray **212** to communicate with a remote computer network (shown in FIG. **8** as **238**) via a radio frequency communication channel (shown in FIG. **8** as **236**).

A suitable wireless computer terminal is an Orion PC manufactured by Netier Technologies. The variety of computer terminal models offered under the Orion PC family includes a "Thin Client" configuration, or a "Fat" system. For example, the "Fat" system comprises an ACD-MSX-100 base unit with a Pentium 266 MHz microprocessor on a Socket 7 motherboard operating a MICROSOFT Windows 95 operating system, 32–128 MB RAM, 2 MB Video RAM, 2 GB hard disk, two Type II PCMCIA slots, one Type III PCMCIA slot, one parallel port, one serial port, one video port, one LCD port, dual USB ports, one PS/2 keyboard/mouse port, one IrDa port, and one battery module. Optional accessories for the Orion PC family include an automobile cigarette lighter charger/adaptor, and AC charger/adaptor, a second battery module, a floppy disk drive, and a CD-ROM or CD-R drive. Those skilled in the art will appreciate that other computer terminals can be used in conjunction with the present invention to achieve the same purpose.

Many different computer interfaces may be used to input data into the wireless computer terminal, including a keyboard, a keypad, a scanner, a serial mouse, or any other similar type of input device. A suitable keyboard for use with the wireless computer terminal is a thin Cherry keyboard with a PS/2 interface. An optional plastic keyboard cover protects the keyboard from spills during usage. Other computer interfaces for the wireless computer terminal include a PSC Q6000 scanner with a PS/2 interface, a serial mouse, and a Y-cable to merge the keyboard and the scanner inputs.

Typically, a conventional electrical connection (not shown) between the wireless computer terminal **274** and the power converter provides an interface between the computer terminal **274** and the power converter. Conventional electrical connections such an automobile adaptor plug, or a touch-pin battery charging terminal can be used with a wireless computer terminal **274** to provide an interface with the power converter within the back mounting bracket **222**. The power converter, in turn, is connected to the power unit **230** by the power cable (shown in FIG. **10A** as **254**). The power unit **230** can then be plugged into a standard 120 Volt AC outlet with the power cord **232**.

The back mounting bracket **222** or wiring tray also mounts to the bottom side **278** of the horizontal tray **212**. The back mounting bracket **222** or wiring tray supports the power converter substantially parallel to and adjacent to the bottom side **278** of the horizontal tray **212**. The power converter is supported within the sidewalls of the back mounting bracket **222**, which can further support cables (not shown) for other devices connected to the computer terminal **274**, such as a mouse, keypad, or other similar devices, or support other power converters for other electrical devices associated with the mobile workstation **210**. A series of ventilation holes **282** machined in the sidewall of the back mounting bracket **222** assist in venting heat away from the power converter mounted within the back bracket **222**.

The tray housing **218** is also attached the bottom side **278** of the horizontal tray **212**. The tray housing **218** is sized to fit over the front mounting bracket **220** and the back mounting bracket **222** leaving sufficient clearance between the topside of the tray housing **218** and both the front bracket **220** and the back bracket **222**. Sufficient clearance between the tray housing **218** and the front mounting bracket **220** permits the installation of a keyboard **272** or keypad within the pull-out keyboard tray **250** in the tray housing **218**, so that the keyboard **272** does not interfere with the bottom of the front mounting bracket **220** when the pull-out keyboard tray **250** is fully retracted within the tray housing **218** as shown.

The access opening **246** in the side wall of the tray housing **218** permits operator access to various ports or interfaces on the side of the wireless computer terminal **274** through the access window **280** of the front mounting bracket **220**. The size of the access opening **246** also permits operator access to actuate the release lever **228** of the gas spring height adjustment mechanism (shown in FIG. **10A** as **256**) to raise or lower the height of the mobile workstation **210** as shown in FIGS. **9A–9B** and FIGS. **11A–11B**.

FIG. **12B** shows the pull-out keyboard tray **250** in a retracted position within the tray housing **218**. The display screen **224** of the mobile workstation **210** is shown in a

substantially vertical orientation to the horizontal tray **212**. In this configuration, an operator can transport the mobile workstation **210** from one area to another area, or use the top surface **266** of the horizontal tray **212** as a work surface. The length **284** of the horizontal runner beams **260***a–b* is approximately 21.3 inches.

FIG. **12**C shows a front view of the mobile workstation **210** in FIG. **12**A. The computer terminal **274** is shown mounted within the front mounting bracket **220** and above the keyboard **272** mounted within the pull-out keyboard tray **250**. The height **286** from the top surface **266** of the horizontal tray **212** to the floor is approximately 38.6 inches when the tray **212** is in the lowermost position. The height **288** from the top edge of the display screen **224** in a fully vertical orientation to the floor is approximately 54.5 inches when the tray **212** is in the lowermost position. The width **290** between the outboard ends of the horizontal runner beams **260***a–b* is approximately 21.4 inches. Other heights **286**, **288** for the horizontal tray **212** and the display screen **224** can be attained when the mobile workstation is adjusted for ease of accessibility and visibility.

FIGS. **13**A–**13**D illustrate a series of views of the horizontal tray **212** of the mobile workstation **210** of FIG. **8** with an attached tray housing **218**, front mounting bracket **220**, back mounting bracket **222**, and pull-out keyboard tray **250**. FIG. **13**A shows a perspective view of the horizontal tray **212** shown in FIG. **8**, with an attached tray housing **218** extending from the bottom side of the horizontal tray **212**.

FIG. **13**B shows the top view of the horizontal tray **212**. The top surface of the horizontal tray **212** is rectangular in shape with rounded edges at the front side **292**, the left side **294**, and right side **296**. The rear side **298** of the horizontal tray **212** has a square edge. The width **300** of the horizontal tray **212** from the left side **294** to the right side **296** is approximately 18.0 inches. The depth **302** of the horizontal tray **212** from the front edge **292** to the rear edge **298** is approximately 19.4 inches. A series of four mounting holes **304***a–d* is machined into the rear portion of the top surface **266** of the horizontal tray **212** to correspond with a set of mounting bolts (not shown) used to secure the base of the tiltable bracket (shown in FIGS. **12**A–**12**C as **248**) to the top surface **266** of the horizontal tray **212**. A first hole **306** in the left rear portion of the top surface **266** of the horizontal tray **212** provides access for the display screen cables (not shown) to extend from the display screen **224** to the computer terminal **274** underneath the horizontal tray **212**. A second hole **308** machined in the left rear portion of the horizontal tray **212** provides a mount for the terminal antenna **234** permitting the wireless computer terminal **274** to communicate with a computer network (shown in FIG. **8** as **238**) via radio frequency communication channel (shown in FIG. **8** as **236**).

FIG. **13**C shows the front view of the horizontal tray **212** shown in FIG. **13**A, with a wireless computer terminal **274** within the front mounting bracket **220**, and a keyboard **272** within the pull-out keyboard tray **250** mounted to the tray housing **218**. Each side wall **310***a–b* of the tray housing **218** curves inward at the top portion of the side wall providing a mounting lip **312***a–b* to attach the tray housing **218** to the bottom side **278** of the horizontal tray **212**. Holes (not shown) are machined in the mounting lip **312***a–b* to correspond with bolts (not shown) to attach the tray housing **218** securely to the bottom side **278** of the horizontal tray **212**.

A pull-out keyboard tray **250** is supported between the side walls **310***a–b* of the tray housing **218** and substantially parallel to the top side of the tray housing **218**. The pull-out tray **250** can be extended or retracted from the front of the tray housing **218**. As described previously, conventional rollers (not shown) mounted on the bottom of the pull-out tray **250** correspond with guide slots (not shown) mounted or machined into the top side of the tray housing **218**. The keyboard **272** fits within the pull-out keyboard tray **250** so that the keyboard **272** does not interfere with the front mounting bracket **220** when the pull-out keyboard tray **250** is retracted within the tray housing **218**.

FIG. **13**D shows a side view of the horizontal tray **212** shown in FIG. **13**A, with an attached tray housing **218**, front mounting bracket **220**, back mounting bracket **222** or wiring tray, and pull-out keyboard tray **250**. The front mounting bracket **220** mounts towards the front portion of the horizontal tray **212**, providing operator access to the computer terminal **274** from the front edge **292** of the horizontal tray **212**. The back mounting bracket **222** or wiring tray mounts towards the rear portion of the horizontal tray **212**, flush with the rear edge **298** of the bottom side **278** of the horizontal tray **212**. The tray housing **218** mounts near the front edge of the bottom side **278** of the horizontal tray **212**, substantially overlapping the front mounting bracket **220** and partially overlapping the back mounting bracket **222**. The access opening **246** in the side wall of the tray housing **218** permits operator access to the various ports or interfaces in the side of the wireless computer terminal **274** through the access window **280** of the front mounting bracket **220**. The height **314** of the horizontal tray **212** with the attached tray housing **218** measured from the top surface **266** of the horizontal tray **212** to the bottom side of the tray housing **218** is approximately 4.7 inches.

FIGS. **14**A–**14**D illustrate the details of the front mounting bracket **220** shown in FIG. **8**. FIG. **14**A shows a perspective view of a front mounting bracket **220**. The front mounting bracket **220** is sized to receive a wireless computer terminal **274** between two side walls **316***a–b* and on the top surface **318** of the front bracket **220**. Each side wall **316***a–b* of the front bracket **220** is shaped with a mounting lip **320***a–b* extending along the top of each side wall **316***a–b* for mounting the front bracket **220** to the bottom surface **278** of the horizontal tray **212**. Two bolt holes **322***a–d* are machined through each mounting lip **320***a–b* to receive bolts (not shown) attaching the front bracket **220** to the bottom surface **278** of the horizontal tray **212**. Access windows **324**, **326** are cut into each side wall **316***a–b* of the front bracket **220** to permit user access to the ports or interfaces on each side of the wireless computer terminal **274**. An elongated access opening **328** along the rear portion of the front bracket **220** permits user access to the ports or interfaces on the bottom of the wireless computer terminal **274**. Four tongue protrusions **330***a–d* from the top surface **318** of the front bracket **220** position the wireless computer terminal **274** within the front bracket, between the side walls **316***a–b* and flush against the rear edge **132** of the front bracket **220**. Two of the tongue protrusions **330***b*, **330***d* extend from and are parallel to the rear edge **332** of the front bracket **220** to prevent the wireless computer terminal **274** from extending past the rear edge **332** of the front bracket **220**. The other two tongue protrusions **330***a*, **330***d* extend upward from the top surface **318** of the front bracket **220** and run parallel with the side walls **316***a–b* of the front bracket **220** to position the wireless computer terminal **274** between the side walls **316***a–b* of the front bracket **220** and towards the center portion of the front bracket **220**. The tongue protrusions **330***a–d* are used to position the wireless computer terminal **274** within the front bracket **220**. Other types of positioning structures or methods may be used in accordance with the present invention.

FIG. **14**B shows a top view of the front mounting bracket **220** in FIG. **14**A. The front mounting bracket **220** can be manufactured from 1/16 inch thickness sheet steel, or any other suitable material. The width **334** of the front bracket **220** measured from the interior of the left sidewall **316***a* to the interior of the right sidewall **316***b* is approximately 14.3 inches. The width **336** of the front bracket **220** measured from the outboard end of the left sidewall mounting lip **320***a* to the right sidewall mounting lip **320***b* is approximately 15.5 inches. The depth **338** of the front bracket **220** measured from the front edge **340** to the rear edge **332** is approximately 7.4 inches.

FIG. **14**C shows a front view of the front mounting bracket **220** shown in FIG. **14**A. The height **342** of the front mounting bracket **220** measured from the top of either mounting lip **320***a–b* to the bottom side **344** of the front bracket **220** is approximately 2.522 inches.

FIG. **14**D shows a side view of the front mounting bracket **220** shown in FIG. **14**A. The access windows **324**, **326** cut into the side walls **316***a–b* of the front bracket **220** are sized to permit access to ports or interfaces on the sides of the wireless computer terminal (shown in FIG. **13**D as **274**).

FIGS. **15**A–**15**D illustrate the details of the back mounting bracket **222** or wiring tray shown in FIG. **8**. FIG. **15**A shows a perspective view of a back mounting bracket **222** or wiring tray. The back mounting bracket **222** or wiring tray is sized to receive a power converter (shown within the back mounting bracket **222** in FIG. **12**B as **276**) between two side walls **342***a–b*, a rear wall **344**, and the top surface **346** of the back mounting bracket **222**. The back mounting bracket **222** or wiring tray can also support associated cables or other power converters associated with the mobile workstation **210**. The side walls **342***a–b* of the back bracket **222** are shaped with a mounting lip **348***a–b* extending along the top of each side wall **142***a–b* for mounting the back bracket **222** to the bottom surface (shown in FIG. **13**D as **278**) of the horizontal tray (shown in FIG. **13**D as **212**). A single bolt hole **350***a–b* is machined through each curved mounting lip **348***a–b* to receive bolts (not shown) attaching the back mounting bracket **222** to the bottom surface **278** of the horizontal tray **212**. The series of ventilation holes **282** machined into the side walls **342***a–b* of the back bracket **222** permit the ventilation of heat from the power converter **276** within the back bracket, allowing subsequent cooling of the power converter **276**.

An access window **352** cut into the middle portion of the front edge **354** of the top surface **346** of the back bracket **222** accommodates the vertical beam (shown in FIG. **10**A–**10**B as **226**). The vertical beam **226** extends upward from the chassis **216** and fits into the access window **352**.

FIG. **15**B shows a top view of the back mounting bracket **222** or wiring tray shown in FIG. **15**A. The back mounting bracket **222** or wiring tray can be manufactured from 1/16 inch thickness sheet steel, or any other suitable material. The interior width **356** of the back bracket **222** measured from the interior of the left sidewall **342***a* to the interior of the right sidewall **342***b* is approximately 13.8 inches. The exterior width **358** of the back bracket **222** measured from the outboard end of the left sidewall **342***a* mounting lip **348***a* to the outboard end of the right sidewall **342***b* mounting lip **348***b* is approximately 15.5 inches. The depth **360** of the back bracket **222** measured from the front edge **354** of the back bracket **222** to the rear edge **362** of the back bracket **222** is approximately 7.5 inches. A series of bolt holes **364** are drilled in the top surface **346** of the back bracket **222** to mount the battery pack **276** to the back mounting bracket **222**. A corresponding series of bolts (not shown) pass through the bolt holes **364** attaching the battery pack **276** to the top surface **346** of the back bracket **222**. Other holes **365** shown in the top surface **346** of the back bracket **222** are used for tie-wraps to secure loose cables in the back mounting bracket **222** or wiring tray.

FIG. **15**C shows a front view of the back mounting bracket **222** or wiring tray shown in FIG. **15**A. The height **366** of the back mounting bracket **222** measured from the top of either mounting lip **348***a–b* to the bottom side **368** of the back bracket **222** is approximately 2.8 inches.

FIG. **15**D shows a side view of the back mounting bracket **222** in FIG. **15**A. The ventilation holes **282** in the center portion of the left sidewall **342***a* are selectively sized and shaped to permit sufficient ventilation of heat from the power converter **276**, resulting in the subsequent cooling of the power converter **276**.

FIG. **16** is a front perspective view of another embodiment of a mobile workstation **410**. The mobile workstation **410** includes an adjustable-height horizontal tray **412** supported by a chassis **414**. The chassis **414** includes a dolly assembly **416** that allows an operator, such as a medical practitioner, to easily push the mobile workstation **410** from place to place. The horizontal tray **412** includes an underside tray housing **418**, a mounting bracket **420**, and an underside back mounting bracket **422**.

The tray housing **418** supports a keyboard (not shown) or keypad for a wireless computer terminal (not shown) in a pull-out keyboard tray **424**. The wireless computer terminal mounts within the mounting bracket **420**. The back mounting bracket **422** supports a power converter (not shown) that converts conventional AC or battery power to suitable electrical power for the wireless computer terminal and a display screen **426**. The tiltable display screen **426** attaches to the top of the horizontal tray **412** while connecting to the wireless computer terminal. The back mounting bracket **222** can also support associated cables or other power converters associated with the mobile workstation **210**.

The chassis **414** includes a vertical beam **428** connecting the horizontal tray **412** to the dolly assembly **416**. The vertical beam **428** includes a gas-spring height adjustment mechanism (not shown) and a release lever (not shown) for adjusting the length of the beam **428** and, thus, the height of the horizontal tray **412** above the dolly assembly **416**. For example, the chassis **414** may be a chassis model previously described and shown in FIG. **8**.

The mobile workstation **410** also carries a power unit **430** including a battery charger, an extended-life battery, a power cord **432**, and a recoil mechanism that can retract the power cord when the cord is not plugged into an AC outlet. The power unit **430** is located on the lower end of the chassis **414**. For example, the power unit **430** may reside between two metal beams in the dolly assembly **416** at the lower end of the chassis **414**. A suitable power unit **430** is a 26 Amp-Hour battery providing a regulated 10–16 Volt output at 40 watts with an automatic low power cut-off. The extended-life battery may be a 12-Volt sealed lead acid battery, and the battery charger may be a 120-Volt AC to 16-Volt DC converter.

The power unit **430** typically includes a first status-indicator light to inform the user when the AC power is being supplied, a second status-indicator light to inform the user when the battery needs recharging, and a seven-level battery status-indicator light. The power unit **430** may also include a sound indicator that beeps to inform the user when the battery needs recharging. When plugged into an AC

outlet, the battery charger will charge both the extended-life battery and operate the wireless computer terminal. The extended-life battery can be recharged by plugging the power cord **432** into a standard 120-volt AC outlet. When not in use, the recoil mechanism automatically recoils the power cord **432** into the power unit **430**.

The wireless computer terminal inside the mobile workstation **410** communicates through a radio transmitter/receiver terminal antenna **434** attached to the top of the horizontal tray **412**. The terminal antenna **434** is operable for communicating over an approved radio frequency. In particular, the wireless computer terminal may establish a radio-frequency communication channel with a distributed patient-care computer network as previously shown and described in FIG. **8**.

FIG. **17** is a rear right side perspective view of the mobile workstation **410** in FIG. **16**. A tiltable bracket **436** attaches the display screen **426** to the horizontal tray **412**. The tiltable bracket **436** maintains the display screen **426** in a number of selectable rotational positions relative to the tray **412**. The rotational range of the tiltable bracket **436** is preferably about 30 degrees rearward from vertical. That is, the tiltable bracket **436** preferably allows the display screen **426** to be rotated left to right. The tiltable bracket **436** could also be configured to allow the display screen **426** to rotate forward through a similar rotational range.

It should be understood that the term "substantially vertical" may include a range about a strictly vertical orientation, represented by a 30 degree range. For example, the term "substantially vertical" includes configurations in which the bracket **436** maintains the display screen **426** in a strictly vertical orientation, or at a fixed rotational orientation with a vertical component, or within a range of rotational orientations including orientations that include vertical components. Alternatively, the display screen **426** could be supported in a substantially horizontal position, for example by a drawer or pull-out tray located above or under the horizontal tray **412**. Other locations for the display screen **426** may be preferred in certain environments. For example, the display screen **426** could be mounted to the side of the horizontal tray **412**, to the underside of the horizontal tray **412**, to the dolly assembly **416**, to the vertical beam **428**, and so forth.

The tiltable bracket **436** imparts sufficient rotational resistance to maintain the display screen **426**, with an associated computer terminal (not shown), at any of the rotational aspects within the rotational range defined by the tiltable bracket **436**. At the same time, the rotational resistance imparted by the tiltable bracket **436** is pliant enough to allow the operator to change the rotational orientation of the display screen **426** with one hand. For example, the operator may easily adjust the angle of the display screen **426** to avoid glare on the display screen **426**.

FIG. **18** is a rear right side perspective view of the mobile workstation **410** in FIG. **16** with the pull-out keyboard tray in the extended position. The pull-out keyboard tray **424** slides from an inner position, shown in FIGS. **16–17**, to an outer position, shown in FIG. **18**, along conventional rollers (not shown) within a conventional roller guide slots (not shown). Typically, rollers mounted to the bottom side of the keyboard tray **424** fit within roller guide slots attached to the top side of the tray housing **418**. A keyboard (not shown) fits within the pull-out keyboard tray **424**. The pull-out keyboard tray **424** is to detent when fully extended away from the front edge of the tray housing **418**, permitting the operator to type on the keyboard without the keyboard tray **424** sliding back into the tray housing **418**. When the pull-out keyboard tray **424** is in the retracted position, the keyboard tray **424** will not slide out during movement or transport of the mobile workstation **410**.

As shown in FIG. **18**, the pull-out keyboard tray **424** can be extended outward from the front end of the tray housing **418**. The rollers on the bottom of the pull-out keyboard tray **424** permit the pull-out tray **424** to roll forward within the roller guide slots along the length of the top side of the tray housing **418**. The roller guide slots have a physical stop at the front end of the tray housing **418**. When a roller makes contact with the physical stop at the front end of the tray housing **418**, the pull-out keyboard tray **424** cannot be extended any further from the front edge of the tray housing **418**.

FIG. **19** is a front right side perspective view of the mobile workstation **410** in FIG. **16** with the pull-out keyboard tray **424** in the extended position. The top portion of a rectangular cover for the vertical beam **428** has been removed, showing an underlying shaft **438** and a power cable **440** connecting the power unit **430** to the power converter (not shown). This shaft **438** connects to the gas-spring height adjustment mechanism (not shown) that allows adjustment of the height of the horizontal tray **412**. The gas-spring height adjustment mechanism, which is located at the bottom of the vertical beam **428**, sits on top of the dolly assembly **416**. This dolly assembly **416** includes an arched cross-beam **442** that connects to two horizontal runner beams **444***a–b*. Two casters, represented by the caster **446**, are connected to the bottom sides of each horizontal runner beam **444***a–b*. For example, a suitable size caster is a conventional 5" caster. The power unit **430** is mounted below the arched cross beam **442** with a support bracket **448**, which connects between the horizontal runner beams **444***a–b*.

FIG. **20** is a side view of the mobile workstation **410** shown in FIG. **16**. The mounting bracket **420** attaches to the top surface of the horizontal tray **412** permitting a wireless computer terminal (not shown) to be stored on the top of the horizontal tray **412**. The tiltable bracket **436**, supporting the display screen **426**, mounts to the top surface of the mounting bracket **420**. A touch-pin display interface (not shown) located on the back of the wireless computer terminal provides an interface between the computer terminal and the display screen **426**.

The tray housing **418** mounts to the underside of the horizontal tray **412**. The pull-out keyboard tray **424** supporting a keyboard (not shown), mounts to the front portion of the top surface of the tray housing **418**. The wireless computer terminal may include a communication interface, such as an optical interface, for communicating data between the computer terminal and the keyboard. A conventional electrical connection allows the keyboard to communicate keystrokes to the computer terminal. This type of operation permits an operator to easily remove the computer terminal from the mounting bracket **420**, or to remove the keyboard from the pull-out keyboard tray **424**.

The back mounting bracket **422** or wiring tray attaches to the rear portion of the underside of the horizontal tray **412**. The back mounting bracket **422** or wiring tray supports the power converter (not shown) for supplying power to the wireless computer terminal. A touch-pin battery charging terminal (not shown) or other conventional electrical connection, such as an automobile adaptor plug, located on the back of the wireless computer terminal provides an interface between the computer terminal and the power

converter within the back mounting bracket **422**. The power converter, in turn, is connected to the power unit **430** by the power cable (shown in FIG. **19** as **440**). The power unit **430** can then be plugged into a standard 120 Volt AC outlet with the power cord **432**.

An access opening **450** in the side of the tray housing permits operator access to actuate a release lever **452** for raising and lowering the horizontal tray **412**. The release lever **452** operates the gas-spring height adjustment mechanism (not shown). Typically, the release lever **452** has a tee or a paddle on the end, so that an operator can conveniently actuate the release lever **452** thereby raising or lowering the gas-spring height adjustment mechanism.

In view of the foregoing, it will be appreciated that the invention provides a mobile workstation that includes an adjustable-height horizontal tray and a vertically-mounted docking station mounted to the horizontal tray. The mobile workstation also carries a power converter and a power unit including a battery charger and an extended-life battery for a wireless computer terminal stored within the docking station. It will also be appreciated that the invention provides a mobile workstation that includes an adjustable-height horizontal tray mounted on a chassis, a vertically-mounted display screen mounted to the horizontal tray, a wireless computer terminal and battery converter mounted to the horizontal tray, a pull-out keyboard tray mounted beneath the computer terminal, and a power unit mounted to the chassis. The power unit also includes a battery charger and an extended-life battery for the wireless computer terminal. It should be understood that the foregoing relates only to the exemplary embodiments of the present invention, and that numerous changes may be made therein without departing from the spirit and scope of the invention as defined by the following claims.

The invention claimed is:

1. A mobile workstation, comprising:

a wheeled chassis;

a substantially horizontal tray supported by the chassis and having a lower surface and an upper surface defining a substantially horizontal work surface;

a pull-out tray mounted below the horizontal work surface to support a keyboard;

a display screen positioned above the work surface so that the display screen is tiltable relative to the work surface; and

a power unit supported on the chassis to supply power to the device and the display screen.

2. The mobile workstation of claim **1**, wherein the chassis further comprises:

a dolly assembly;

a vertical beam having a first end connected to the dolly assembly and a second end connected to the tray; and

means for altering the length of the vertical beam and maintaining the tray at a plurality of selectable distances from the dolly assembly.

3. The mobile workstation of claim **1**, wherein the device is a computing device.

4. The mobile workstation of claim **1**, wherein the device is a wireless computing device.

5. The mobile workstation of claim **1**, wherein the power unit further comprises:

a rechargeable battery for supplying power to the device; and

a battery charger connectable to an AC power source for charging the rechargeable battery.

6. The mobile workstation of claims **1**, further comprising:

a back mounting bracket supported adjacent to the lower surface of the tray and configured to support a power converter.

7. The mobile workstation of claim **5**, wherein the power unit further comprises:

a power cord for connecting the battery charger to the AC power source; and

a power cord storage assembly operable for retracting the power cord when the power cord is not connected to the AC power source.

8. A mobile workstation, comprising:

a moveable chassis;

a substantially horizontal tray supported by the chassis that defines a work surface;

a height adjustment mechanism for altering the height of the horizontal tray;

a display screen adjacent to the work surface that is tiltable relative to the work surface;

an input device tray supported adjacent to the work surface; and

a power unit supported by the chassis for supplying power to the display screen.

9. The mobile workstation of claim **8**, wherein the horizontal tray is adapted to support a computing device.

10. The mobile workstation of claim **9**, wherein the horizontal tray includes a means for supporting the computing device below the work surface.

11. The mobile workstation of claim **10**, wherein the means for supporting the computing device is substantially parallel to the work surface.

12. The mobile workstation of claim **8**, wherein the chassis is adapted to support a computing device.

13. The mobile workstation of claim **8**, wherein the input device tray is selected from the group consisting of: a pull-out tray, an adjustable tray, and a height adjustable tray.

14. The mobile workstation of claim **8**, wherein the input device tray positions an input device in front of and below the work surface.

15. The mobile workstation of claim **8**, wherein the input device tray is retractable so that when retracted at least a portion of the input device tray is positioned below the work surface.

16. The mobile workstation of claim **8**, wherein the chassis includes a vertical beam and wherein a power cable connected to the power unit is routed inside the vertical beam.

17. The mobile workstation of claim **8**, wherein the chassis includes a vertical beam, the vertical beam includes a shaft and a vertical beam cover, and wherein a power cable connected to the power unit is routed between the shaft and the cover for the vertical beam.

18. The mobile workstation of claim **8**, wherein the chassis comprises:

a plurality of wheels;

at least two substantially horizontal beams, wherein each beam connects at least two of the wheels; and

an arched support plate connected between a selected pair of the horizontal beams.

19. The mobile workstation of claim **18**, wherein the power unit is mounted to the arched support plate so that a portion of the power unit extends below an upper surface of the horizontal beams.

20. The mobile workstation of claim **18**, further comprising:

a support bracket connected between the selected pair of the horizontal beams.

21. The mobile workstation of claim **18**, further comprising:

an arched cross beam for connecting the selected pair of the horizontal beams.

22. The mobile workstation of claim **21**, further comprising:

a vertical beam that connects the arched cross beam to the horizontal tray.

23. The mobile workstation of claim **8**, wherein the chassis comprises:

a plurality of wheels;

a plurality of base supports connecting the wheels; and

a support plate connected to at least two of the base supports to support a power unit so that a portion of the power unit extends below an upper surface of the wheels.

24. The mobile workstation of claim **8**, wherein the display screen is attached to the work surface.

25. The mobile workstation of claim **8**, wherein the display screen extends through a recess in the work surface.

26. A mobile workstation, comprising:

a moveable chassis;

a substantially horizontal tray supported by the chassis that defines a work surface;

a display screen positioned so that at least a portion of the display screen is visible above the work surface, wherein the display screen is tiltable relative to the work surface;

an input device tray proximate to the work surface;

a computing device positioned below the work surface; and

a power unit for supplying power to the computing device.

27. The mobile workstation of claim **26**, wherein the chassis comprises a height adjustment mechanism for adjusting the height of the chassis to adjust the height of the work surface.

28. The mobile workstation of claim **26**, wherein the horizontal tray is adapted to support the computing device.

29. The mobile workstation of claim **26**, wherein the chassis is adapted to support the computing device.

30. The mobile workstation of claim **26**, wherein the input device tray is selected from the group consisting of: a pull-out tray, an adjustable tray and a height adjustable tray.

31. The mobile workstation of claim **26**, wherein the chassis comprises:

a plurality of wheels;

a plurality of base supports connecting the wheels; and

a support plate connected to at least two of the base supports to support a power unit so that a portion of the power unit extends below an upper surface of the wheels.

32. The mobile workstation of claim **26**, wherein the display screen is attached to the work surface.

33. The mobile workstation of claim **26**, wherein the display screen extends through a recess in the work surface.

34. A mobile workstation, comprising:

a moveable chassis;

a tray supported by the chassis that defines a work surface, wherein the tray is adapted to support a computing device so that at least a portion of the computing device is covered by the work surface;

an input device tray located proximate to the work surface;

a display screen positioned so that at least a portion of the display screen is visible above the work surface, wherein the display screen is tiltable relative to the work surface; and

a power unit supported by the chassis for powering the computing device.

35. The mobile workstation of claim **34**, wherein the chassis includes a height adjustment mechanism for adjusting the height of the tray.

36. The mobile workstation of claim **34**, wherein the input device tray is selected from the group consisting of: a pull-out tray, an adjustable tray, and a height adjustable tray.

37. The mobile workstation of claim **34**, wherein the chassis comprises:

a plurality of wheels;

a plurality of base supports connecting the wheels; and

a support plate connected to at least two of the base supports to support a power unit so that a portion of the power unit extends below an upper surface of the wheels.

38. The mobile workstation of claim **34**, wherein the display screen is attached to the work surface.

39. The mobile workstation of claim **34**, wherein the display screen extends through a recess in the work surface.

40. A mobile workstation, comprising:

a moveable chassis;

a substantially horizontal tray supported by the chassis that defines a work surface;

a height adjustment mechanism for altering the height of the horizontal tray;

a support for a computing device having an integrated display screen that is adjacent to the work surface and that allows the display screen to tilt relative to the work surface;

an input device tray supported adjacent to the work surface; and

a power unit supported by the chassis for supplying power to the display screen.

41. The mobile workstation of claim **40**, wherein the input device tray is selected from the group consisting of: a pull-out tray, an adjustable tray, and a height adjustable tray.

42. The mobile workstation of claim **40**, wherein the input device tray positions an input device in front of and below the work surface.

43. The mobile workstation of claim **40**, wherein the input device tray is retractable so that at least a portion of the input device tray is positioned below the work surface.

44. The mobile workstation of claim **40**, wherein the chassis comprises:

a plurality of wheels;

a plurality of base supports connecting the wheels; and

a support plate connected to at least two of the base supports to support a power unit so that a portion of the power unit extends below an upper surface of the wheels.

* * * * *