AO 120 (Rev. 08/10)

TO:	Mail Stop 8 Director of the U.S. Patent and Trademark Office P.O. Box 1450 Alexandria, VA 22313-1450	REPORT ON THE FILING OR DETERMINATION OF AN ACTION REGARDING A PATENT OR TRADEMARK

In Compliance with 35 U.S.C. § 290 and/or 15 U.S.C. § 1116 you are hereby advised that a court action has been filed in the U.S. District Court Northern District of Illinois on the following

☐ Trademarks or ☑ Patents. (☐ the patent action involves 35 U.S.C. § 292.):

DOCKET NO.	DATE FILED	U.S. DISTRICT COURT
22-cv-05527	10/7/2022	Northern District of Illinois

PLAINTIFF	DEFENDANT
Capsa Solutions LLC	Simplifi Medical, LLC

PATENT OR TRADEMARK NO.	DATE OF PATENT OR TRADEMARK	HOLDER OF PATENT OR TRADEMARK
1		See attached exhibits
2		
3		
4		
5		

In the above—entitled case, the following patent(s)/ trademark(s) have been included:

DATE INCLUDED	INCLUDED BY ☐ Amendment ☐ Answer ☐ Cross Bill ☐ Other Pleading	
PATENT OR TRADEMARK NO.	DATE OF PATENT OR TRADEMARK	HOLDER OF PATENT OR TRADEMARK
1		
2		
3		
4		
5		

In the above—entitled case, the following decision has been rendered or judgement issued:

DECISION/JUDGEMENT

CLERK	(BY) DEPUTY CLERK	DATE
Thomas G.Bruton	Lauren Knight	10/11/2022

Copy 1—Upon initiation of action, mail this copy to Director **Copy 3—Upon termination of action, mail this copy to Director**
Copy 2—Upon filing document adding patent(s), mail this copy to Director **Copy 4—Case file copy**

Fig. 6A

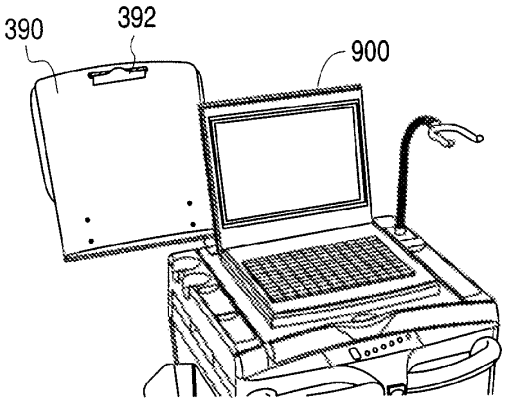

Fig. 6B

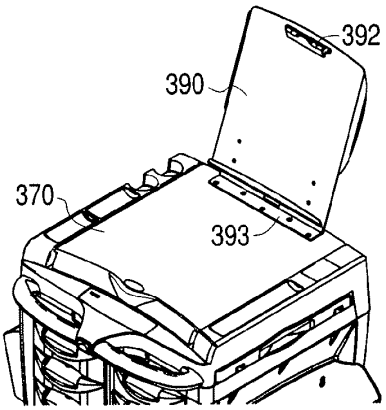

Fig. 6C

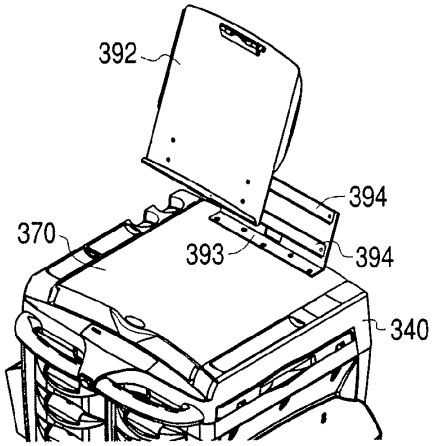

Fig. 7

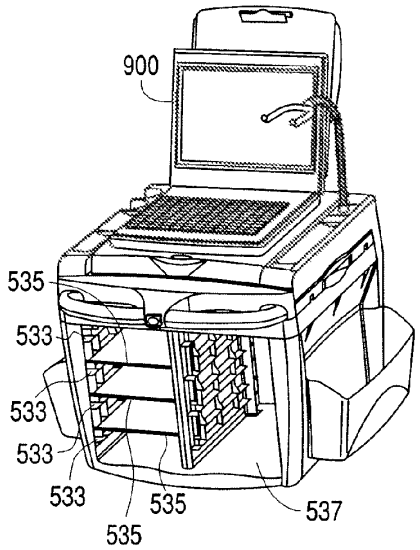
900
535
533
533
533
533
535
535
537

Fig. 8

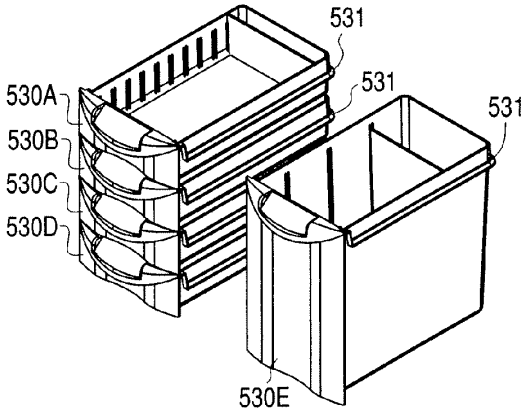
531
531
531
530A
530B
530C
530D
530E

Fig. 9A

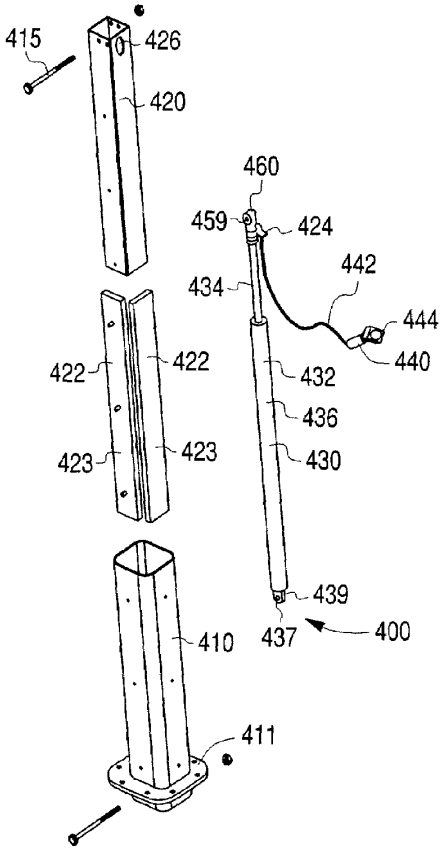
415
426
420
460
459
424
442
434
444
440
422
422
432
436
423
423
430
439
437
400
410
411

Fig. 9B

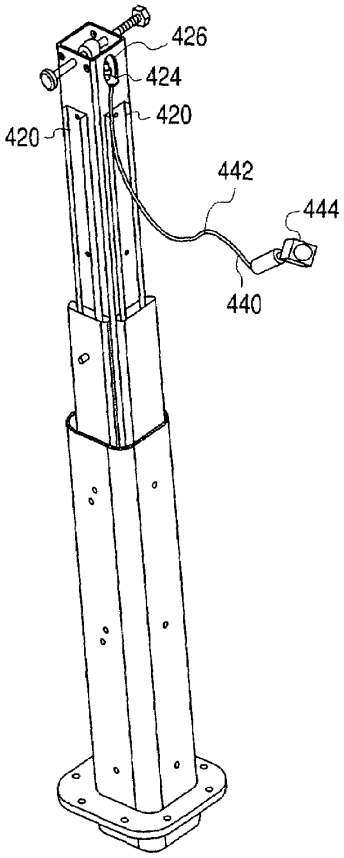
426
424
420
420
442
444
440

Fig. 10A

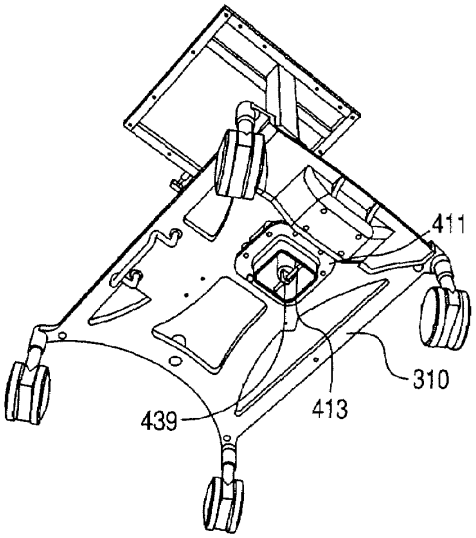

Fig. 10B

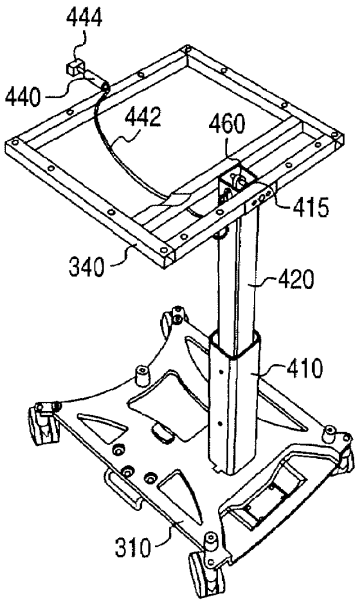

Fig. 12

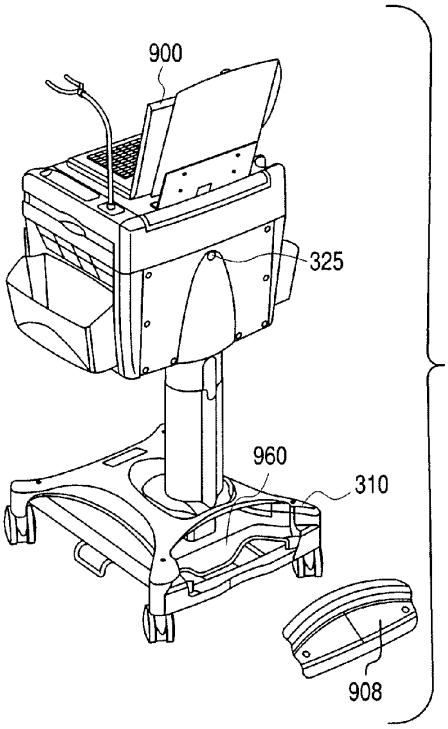

Fig. 11

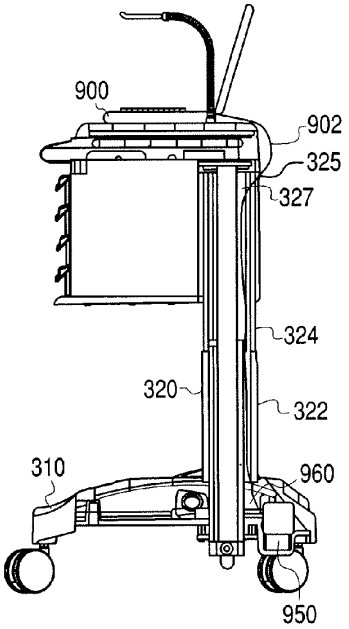

Fig. 13

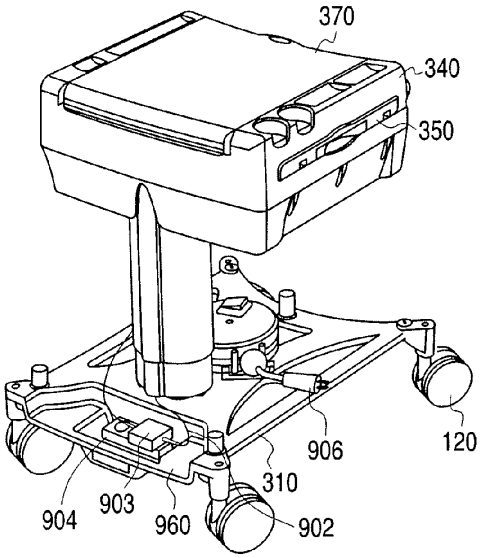

Fig. 14

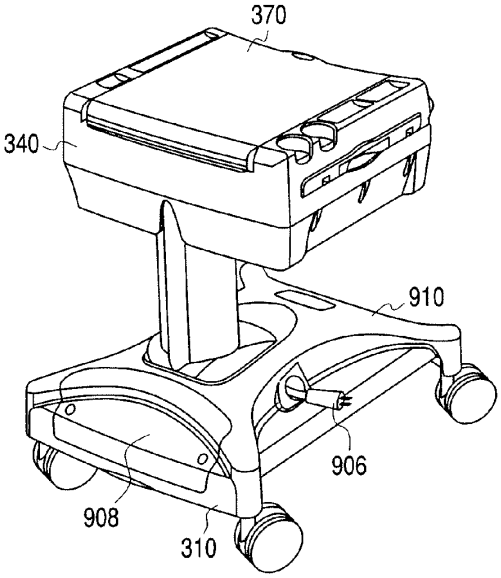

Fig. 15

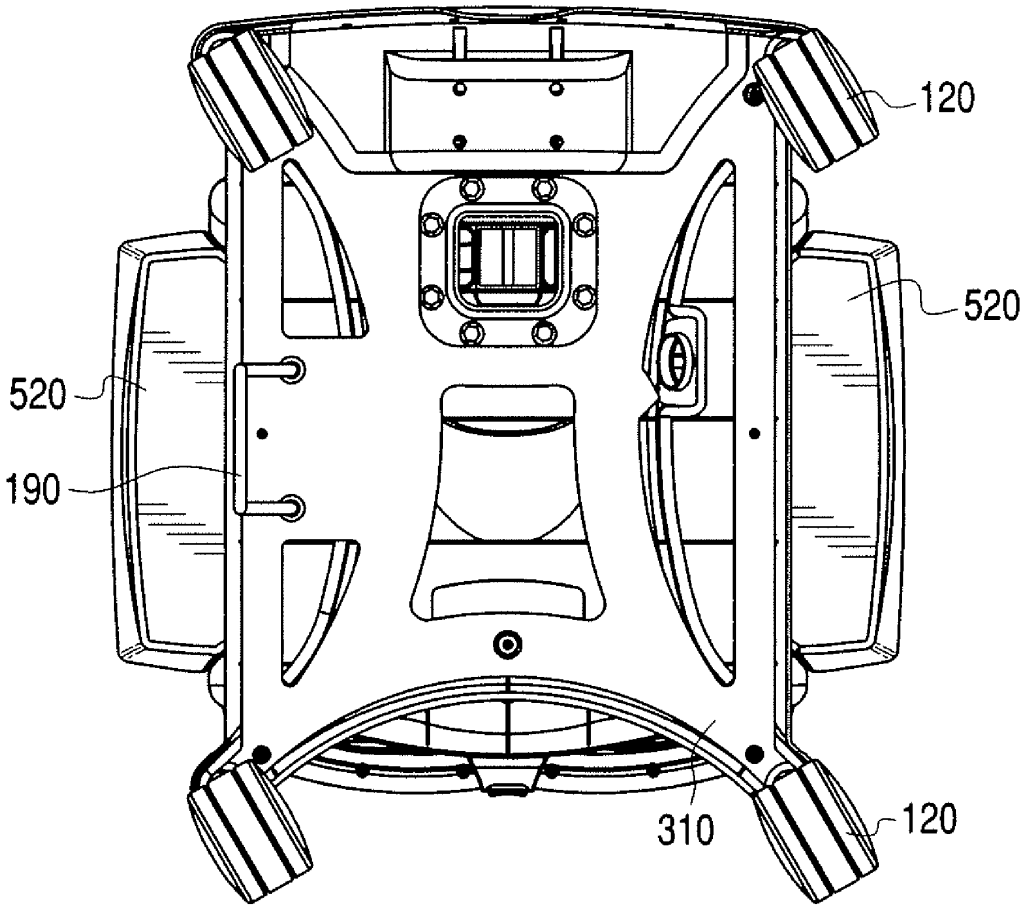

Fig. 16

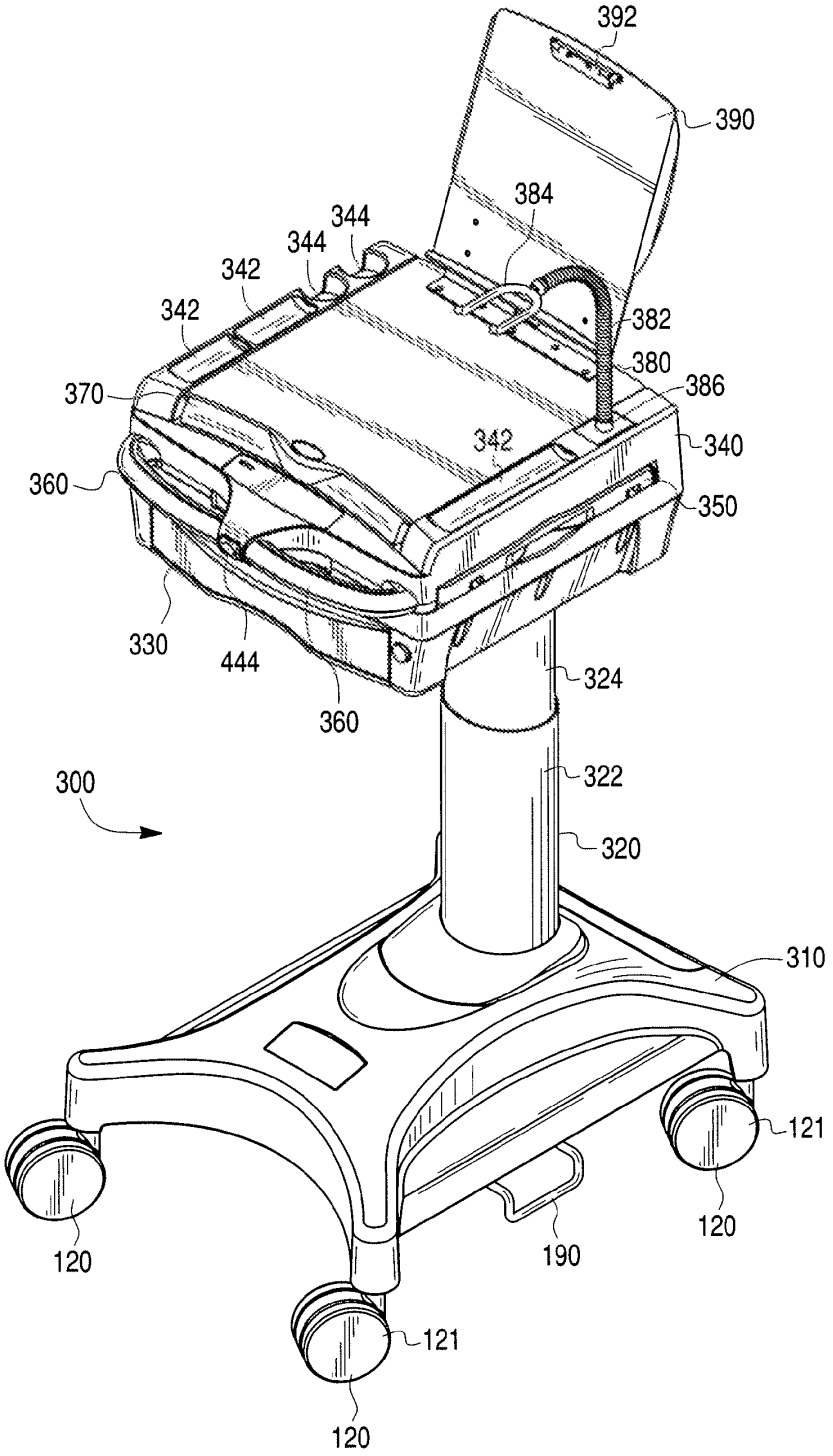
392
390
384
344
344
342
342
382
380
386
370
342
340
360
350
330
444
324
360
322
300
320
310
121
120
120
190
121
120

Fig. 17

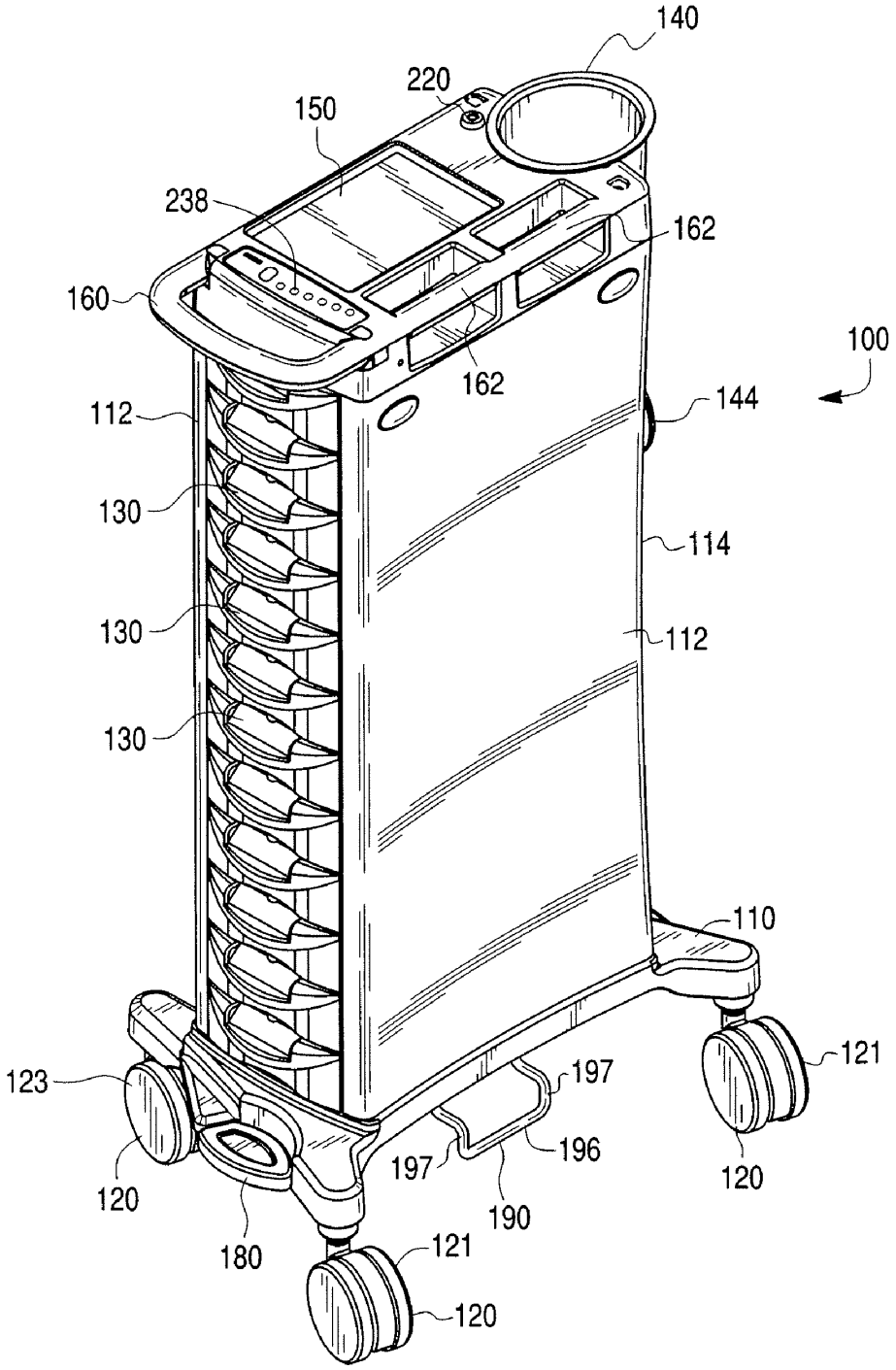
140
220
150
238
162
160
100
162
144
112
130
114
130
112
130
110
121
123
197
196
197
120
120
190
180
121
120

Fig. 18

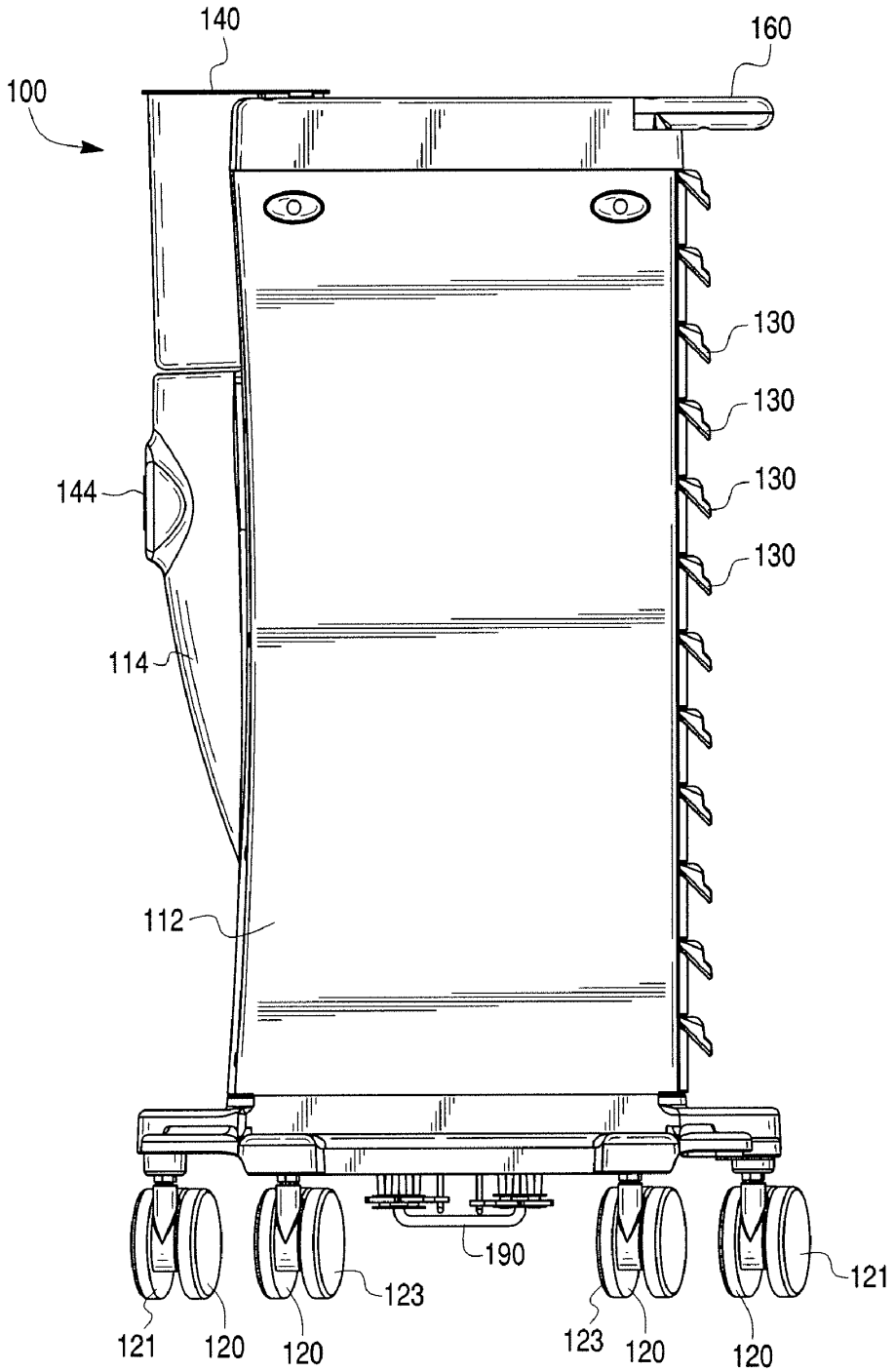
140
160
100
130
130
130
130
144
114
112
190
123
121
121
120
120
123
120
120

EXHIBIT A

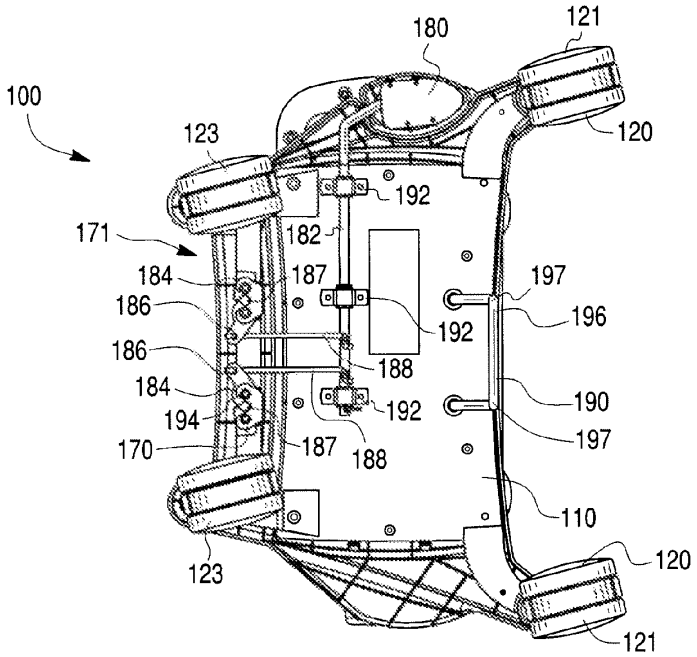
100
180
121
120
123
192
171
182
184
187
197
186
192
196
186
188
184
192
190
194
197
170
187
188
110
123
120
121

Fig. 19

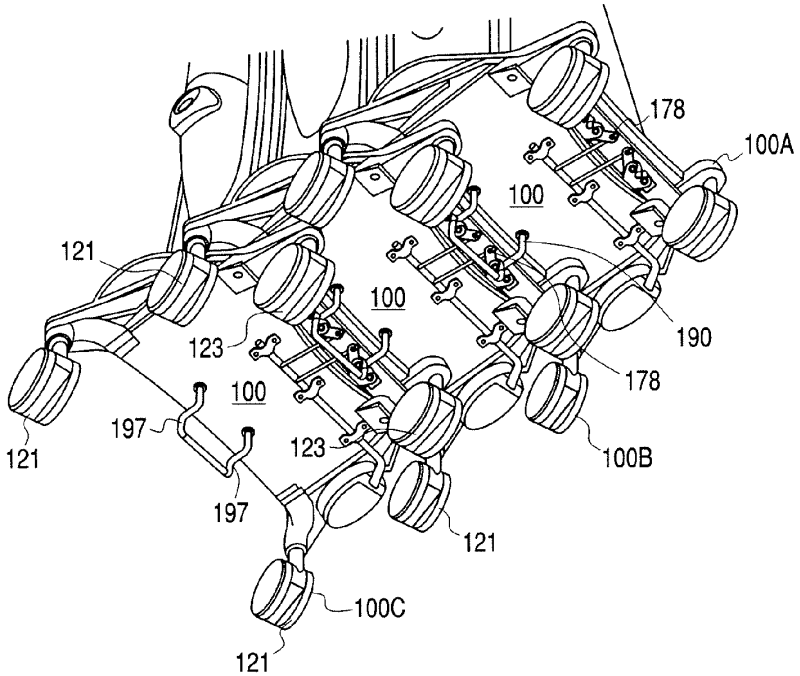
178
100A
100
121
100
190
123
178
100
197
123
100B
121
197
121
100C
121

Fig. 20

Fig. 21B

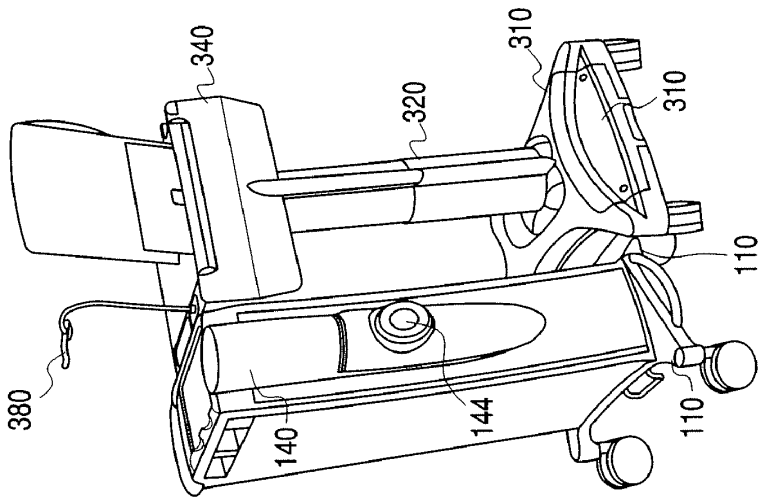

Fig. 21A

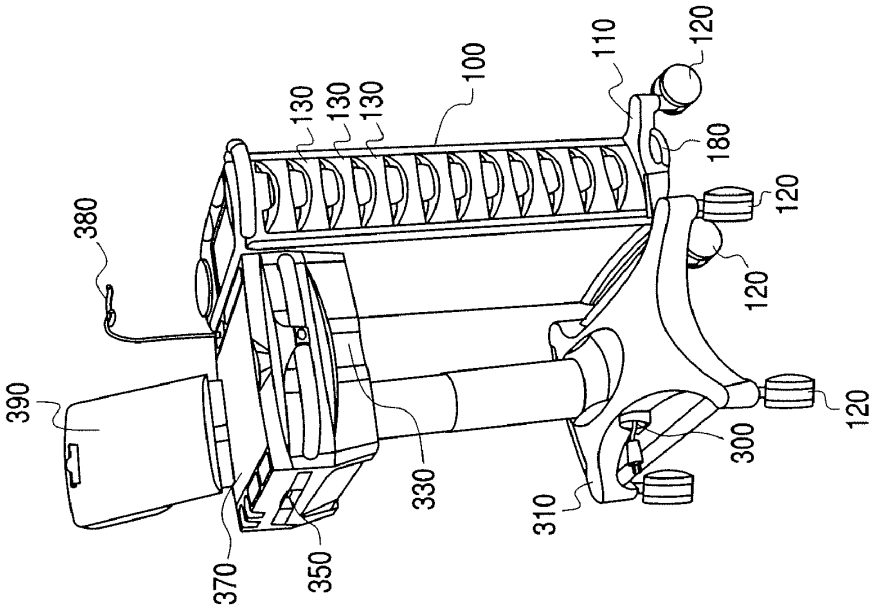

Fig. 22

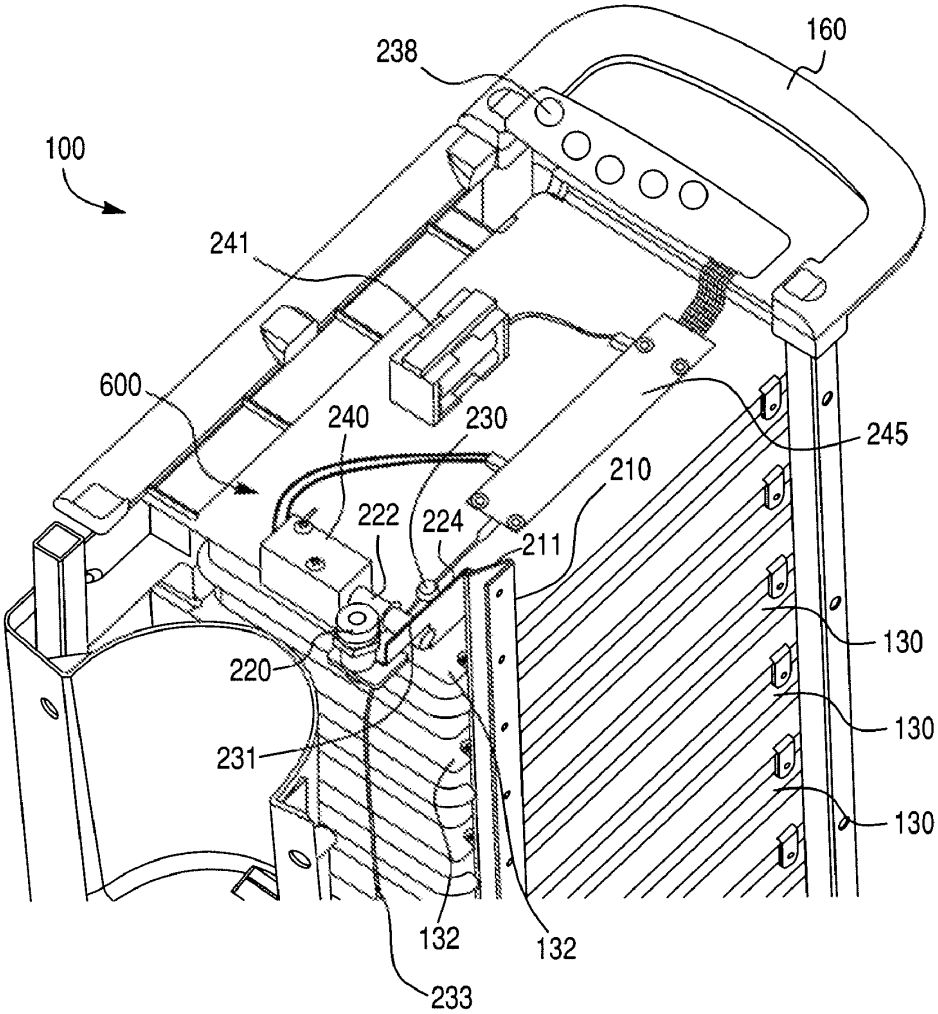
238
160
100
241
600
240
230
245
210
222
224
211
130
220
130
231
130
132
132
233

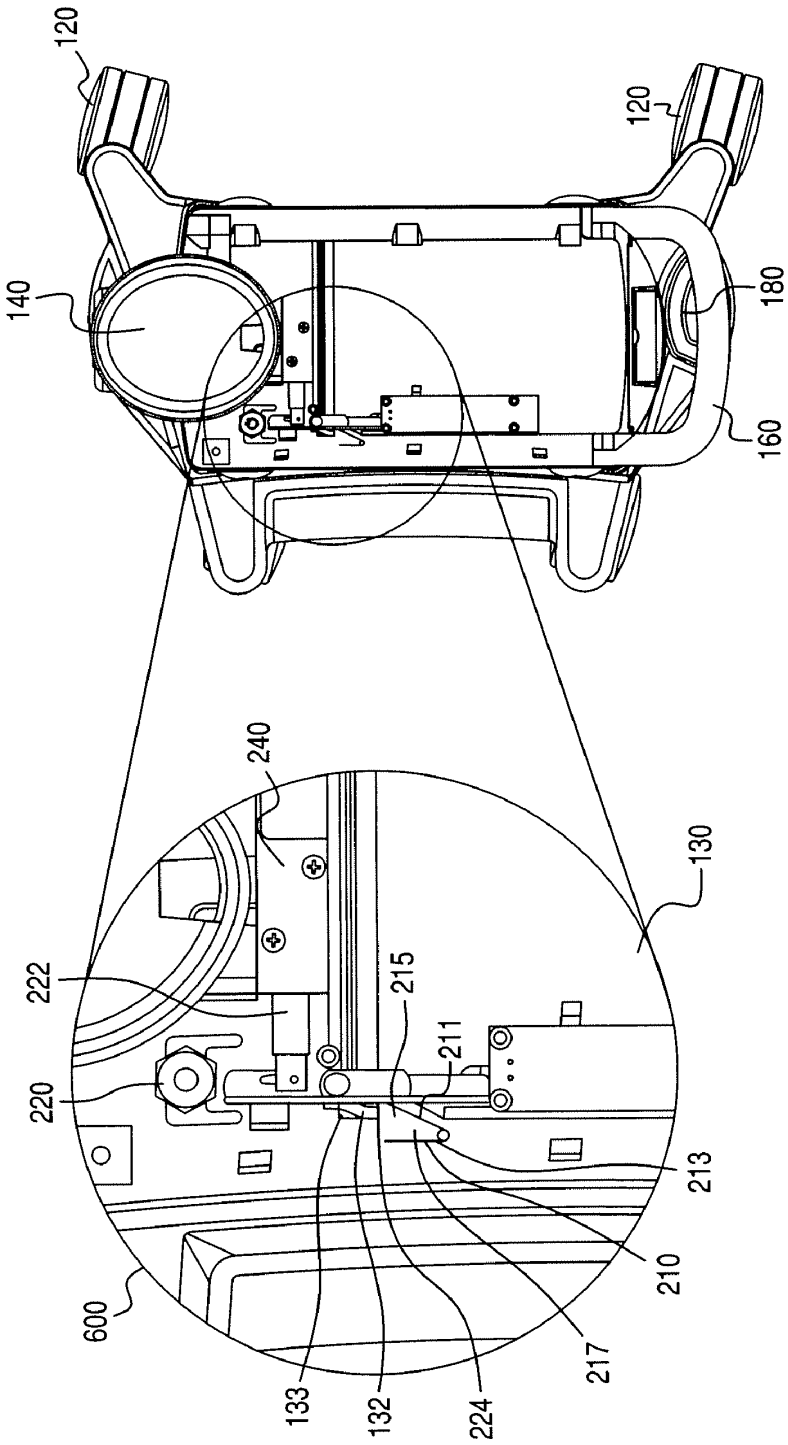

Fig. 23

Fig. 23A

Fig. 24

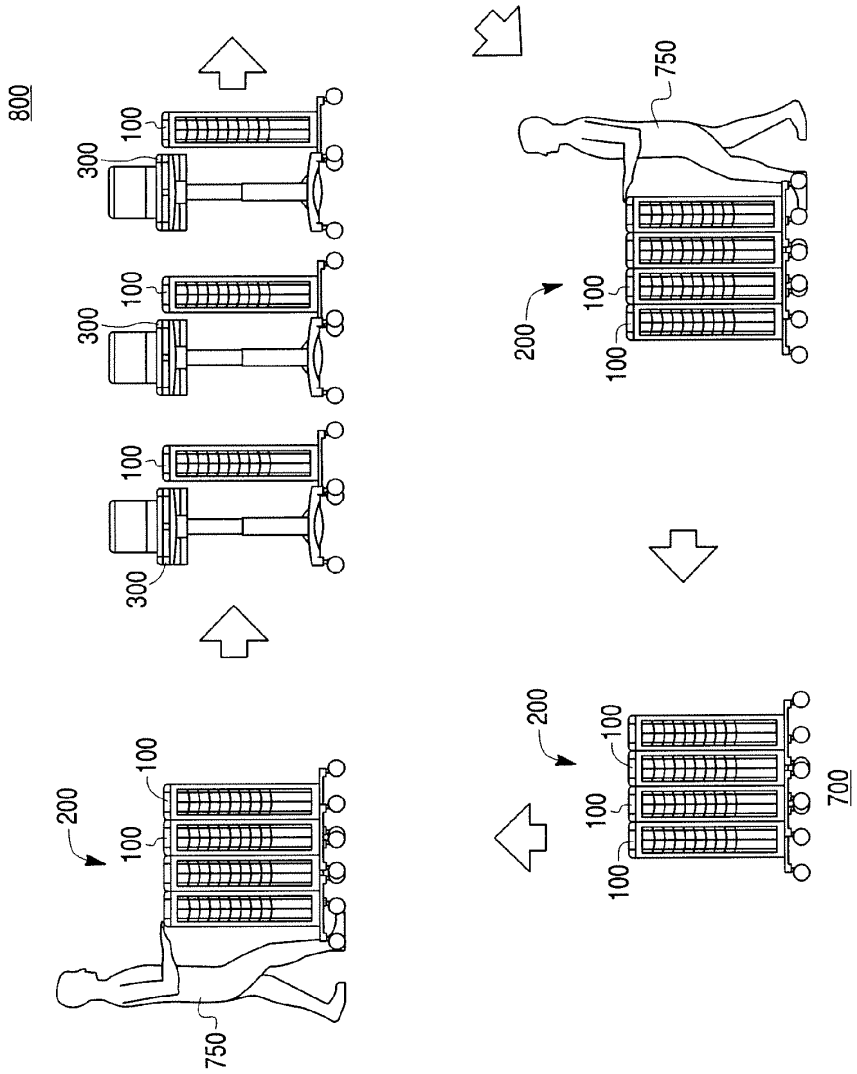
800
300
100
300
100
300
100
200
100
100
750
200
100
100
100
750
200
100
100
100
700

MEDICAL CART, MEDICATION MODULE, HEIGHT ADJUSTMENT MECHANISM, AND METHOD OF MEDICATION TRANSPORT

CROSS-REFERENCE TO RELATED APPLICATIONS

This application is a continuation of U.S. application Ser. No. 10/783,030 (filed Feb. 23, 2004), now abandoned and also claims priority to U.S. Provisional Application Nos. 60/448,920 (filed Feb. 24, 2003), 60/484,658 (filed Jul. 7, 2003), and 60/518,649 (filed Nov. 12, 2003). This application also claims priority to U.S. Design patent application Ser. Nos. 29/196,712, 29/196,713, 29/196,714 (all filed Jan. 2, 2004) and to U.S. Design patent application Nos. 29/199,984 and 29/199,985 (both filed Feb. 23, 2004).

BACKGROUND OF THE INVENTION

The Institute of Medicine estimates that medical error is responsible for roughly 98,000 deaths annually, making it the seventh leading cause of death in the U.S. Accordingly, reducing the likelihood of error is an important issue not only for hospitals and doctors, but for society as a whole.

To alleviate some of these concerns, some hospitals provide nurses with medical carts on which a networked laptop computer facilitates the use of Electronic Medical Administration Records ("EMAR"). EMAR is an electronic record of medications and services administered by a healthcare professional through patient and medication identification via bar coding. When admitted into a hospital, the patient receives a bar coded wrist band for identification purposes. Also, healthcare professionals within the pharmacy bar code all the medications to be administered to the patients. Documentation of medications given at the point-of-care has reduced the number of errors by ensuring that the right patient is receiving the proper medication at the correct time. The EMAR software alerts the nurse if there is a discrepancy anytime during the medication administration process.

Unfortunately, however, these medical carts have proven unsatisfactory for a number of reasons. For example, the carts are not ergonomically designed. The average age of a nurse is 47 and roughly 83% of nurses report suffering chronic back pain. In addition, the existing EMAR carts suffer from a relative lack of work surface, lack of an area to dispose of refuse, bad placement of medication drawers, lack of storage space, and relative inability to be usefully raised and lowered to enable the nurse to work when either standing or sitting.

In many hospital environments, a nurse must walk to a central location (e.g., a pyxis machine) at which medication is handled to obtain medication for a particular patient. Often, to avoid giving the wrong medication to a patient, the nurse only carries one patient's medication at a time. This control, however, does not preclude the potential for the medication to be given to the wrong patient such as, for example, if the nurse is sidetracked and asks another nurse to administer the medication.

In addition to the above-mentioned concerns, when one takes into account the number of patients which a nurse must handle, the result is that the nurse must spend a considerable amount of time walking between the central location and each patient's bedside. This problem is exacerbated in some situations in which the central location is located a significant distance from one or more of the patients for which the nurse is responsible. Moreover, the cost associated with paying nurses to continuously travel to and from various medication

locations may be relatively insignificant at the level of a particular nurse but is quite significant to the medical industry as a whole.

What is needed, therefore, is an apparatus and a methodology by which medical error may be reduced and by which the amount of time a nurse spends obtaining and researching medication may be reduced, without compromising safety.

SUMMARY OF THE INVENTION

An aspect of the present invention relates to a cart including a work platform having a work surface and at least one compartment, a base, and a height adjustment mechanism for adjusting the height of the work platform relative to the base. The compartment can be a drawer. The work platform can accommodate drawers of different sizes. Preferably the compartment is configured to be unlocked via a keyless entry system.

The work platform can include a laptop platform that can be moved in at least one of a forward and a rearward direction. The work platform also can include a work surface that can be moved in at least one of a leftward and rightward direction. The work platform also can include a barcode scanner holder.

The cart can include a plurality of rolling members connected to the base. The work platform can include sidewalls and the rolling members can be disposed on the base outside of the sidewalls.

Another aspect of the present invention includes a cart system comprising a first cart and a second cart. The first cart can include at least one compartment and a base having rolling members to permit movement of the first cart. The second cart can include a plurality of compartments and a base having rolling members to permit movement of the second cart. The first and second cart can include linking structure that permits the first and second carts to be connected together for movement.

The first cart can include a work platform having a work surface and that houses the at least one compartment. The first cart can include a plurality of compartments.

Preferably the base of the first cart is configured to nest with the base of the second cart. The second cart can include a housing for supporting the plurality of compartments and the rolling members can be disposed on the base outside of the sidewalls.

Another aspect of the present invention relates to a method of medication transport. The method can include the steps of loading, at a first location, medication into first and second carts, connecting the first and second carts to form a cart train, moving the cart train to a second location when loaded with medication, separating the first and second carts after moving the cart train to the second location, moving the first cart from the second location to a third location, removing medication from the at least one cart at the third location, and returning the first and second carts to the first location.

Another aspect of the present invention relates to a method of medication transport comprising the steps of loading, at a first location, medication into a compartment(s) in a medication module(s), moving the medication module to a second location, transferring medication from the medication module to a medical cart, and administering medicine from the medical cart to a patient.

Another aspect of the present invention relates to a method of medication transport comprising the steps of loading, at a first location, medication into a compartment(s) in a medication module(s), moving the medication module to a second location, exchanging the compartments of the medication module(s) with the compartments of a medical cart(s) at the

second location, returning the medication module(s) having the compartments of the medical cart(s) therein to the first location for refilling while the medical cart(s) having the compartments of the medication module(s) therein are being taken to patients.

These and other features, aspects, and advantages of the present invention will become more apparent from the following description, appended claims, and accompanying exemplary embodiments shown in the drawings.

BRIEF DESCRIPTION OF THE DRAWINGS

FIG. **1** is a perspective view of a first embodiment of a medical cart according to the present invention;

FIGS. **2**A and **2**B are perspective views of a slidable laptop computer surface of the medical cart of FIG. **1**, the laptop surface being moveable forward (FIG. **2**A) and rearward (FIG. **2**B);

FIGS. **3**A and **3**B are top and bottom exploded perspective views of three panels of a sliding platform of the medical cart of FIG. **1**;

FIG. **3**C is an enlarged view of a connection mechanism of the sliding platform of FIGS. **3**A and **3**B

FIGS. **4**A and **4**B are top plan views of the assembled sliding platform in which the platform has been pulled out to the right (FIG. **4**A) and to the left (FIG. **4**B);

FIGS. **5**A-**5**C are close-up views of a barcode scanner and barcode scanner holder of the medical cart of FIG. **1**;

FIGS. **6**A-**6**C are perspective views of a clipboard of the medical cart of FIG. **1**;

FIG. **7** is a perspective view of a work platform of the medical cart of FIG. **1** without compartments;

FIG. **8** is a perspective view of different sized compartments configured to be inserted into the medical cart of FIG. **1**;

FIG. **9**A is an exploded view of parts of a height adjustment mechanism of the medical cart of FIG. **1**;

FIG. **9**B is a perspective view of the height adjustment mechanism of FIG. **9**A in assembled form;

FIGS. **10**A and **10**B are bottom and top perspective views of the height adjustment mechanism of FIGS. **9**A and **9**B being connected to the medical cart of FIG. **1**;

FIG. **11** is a rear perspective view of the medical cart of FIG. **1** having a laptop computer thereon and showing a hatch being removed;

FIG. **12** is cross-sectional side view of the medical cart of FIG. **1**;

FIG. **13** is a rear perspective view of the medical cart of FIG. **1** having both a hatch and a base cover removed;

FIG. **14** is a rear perspective view of the medical cart of FIG. **1** showing a retractable power cord;

FIG. **15** is an underside plan view of the medical cart of FIG. **1** showing a first locking mechanism;

FIG. **16** is a perspective view of a second embodiment of a medical cart according to the present invention;

FIG. **17** is a perspective view of a first embodiment of a medication module according to the present invention;

FIG. **18** is a side plan view of the medication module of FIG. **17**;

FIG. **19** is an underside plan view of the medication module of FIG. **17** showing first and second locking mechanisms;

FIG. **20** is an underside perspective view of a plurality of medication modules of the type shown in FIG. **17** releaseably engaged to form a train;

FIGS. **21**A and **21**B are front and back perspective views of a medical cart of the type shown in FIG. **16** releaseably engaged with a medication module of the type shown in FIG. **17**;

FIG. **22** is a breakaway perspective view of the medication module of FIG. **17** showing a portion of a keyless entry system;

FIG. **23** shows a cross-sectional top view of the medication module of FIG. **17** showing a portion of a keyless entry system; and

FIG. **24** is a diagram of steps for an embodiment of a method of medication transport according to the present invention, which can be performed using a plurality of medication modules of the type shown in FIG. **17** and a plurality of medical carts of the types shown in FIGS. **1** and **16**.

DETAILED DESCRIPTION

Presently preferred embodiments of the invention are illustrated in the drawings. An effort has been made to use the same or like reference numbers throughout the drawings to refer to the same or like parts.

A first embodiment of a medical cart **500** is shown in FIGS. **1**-**15**. With respect to FIG. **1**, it can be seen that the medical cart **500** includes a work platform **340**, a support mechanism **320** that supports and adjusts the height of the work platform **340**, and a base **310**.

The work platform **340** can include a bi-directional laptop platform **370**, a bi-directional work surface **350**, an adjustable barcode scanner holder **380**, an adjustable clipboard **390**, one or more lockable compartments **530**, a plurality of top bins **342**, removable side bins **520**, cup holders **344**, and/or a keypad **238**. Because each of these items is provided on the work platform **340**, a user can ergonomically access each of these items as the work platform **340** is raised or lowered.

The laptop platform **370** can be configured to support, for example, a laptop computer **900** (shown in FIGS. **6**A and **7**). Conventional structure can be provided on the laptop platform **370** to hold the laptop computer in place. The laptop platform **370** can have an arcuate front face **376** at a front portion. The arcuate front face **376** may be designed to correspond to the torso of a user for ergonomic reasons.

The laptop platform **370** can be locked in a central position (FIG. **1**) or adjusted ergonomically to a forward (FIG. **2**A) or rearward (FIG. **2**B) position. As an example of a use of the present invention, when a user lowers the work platform **340** to a low position and moves the laptop platform **370** to a forward position, the user can sit and the work platform **340** functions as a desk. A transfer structure **800** allows the laptop platform **370** to be moved between those positions. The transfer structure **800** can include stationary rails **372** mounted on body portions **802** of the work platform **340** and rails runners **373** mounted on the laptop platform **370**, as shown in FIGS. **2**A and **2**B.

Notches **374**, which include sloped surfaces **375** and cavities **377**, are formed along the rail runners **373**. The notches **374** are configured to engage posts **371** formed along the stationary rails **372**. When the laptop platform **370** is moved by the transfer structure **800**, the sloped surfaces **375** of the notches **374** are configured to engage the posts **371**. By continuing to push (or pull) the laptop platform **370**, the posts **371** will ride up the sloped surfaces **375** and be deposited in cavities **377** in the notches **374**, thereby releasably immobilizing the laptop platform **370** with respect to the work platform **340**.

In one embodiment, one notch **374** may be provided on each of the rail runners **373** and corresponding posts **371** may

be provided on the stationary rails **372**. As a result, the laptop platform **370** can be releaseably locked with respect to the work platform **340**. For example, as shown in FIGS. **2**A and **2**B, the posts **371** may be provided at rear portions of the stationary rails **372** and the notches **374** may be similarly provided at rear portions of the rail runners **373**. As a result, the laptop platform **370** will be releaseably locked with respect to the work platform **340** when in a central position shown in FIG. **1**.

In another embodiment, each of the stationary rails **372** may include at least three posts **371**, one provided at each end of the stationary rails **372** and one provided in a central portion of the stationary rails **372**. Correspondingly, each of the rail runners **373** may include three notches **374**, one provided at each end of the rails runners **373** and one provided in a central portion of the rail runners **373**. As a result, the surface **370** can be releasably immobilized with respect to the work platform **340** in a forward position (FIG. **2**A), a rearward position (FIG. **2**B), and a central position (FIG. **1**). In the forward position (FIG. **2**A), the rearmost notches **374** may be engaged with the forwardmost posts **371**. Similarly, in the rearward position (FIG. **2**B), the forwardmost notches **374** may be engaged with the rearmost posts **371**. Finally, in the central position, all three posts **371** on each stationary rail **372** may be engaged with the corresponding cavity **377** of the notches **374** of the rail runners **373**.

In another embodiment, the contact between the stationary rails **372** and the rail runners **373** can be frictionally enhanced such that the laptop platform **370** does not readily slide with respect to the work platform **340**. Rather, force (i.e., either pushing or pulling on the laptop platform **370**) will be required to overcome the frictional engagement between the stationary rails **372** and the rail runners **373**. As a result, the laptop platform **370** can be relatively fixed with respect to the work platform **340** at any location between a forwardmost position (FIG. **2**A) and a rearmost position (FIG. **2**B). In addition, one or more notches **374**/posts **371** may be combined with the frictional engagement between the stationary rails **372** and the rail runners **373**.

When the laptop platform **370** is pushed forward or rearward, it can expose a secondary work area **379** provided below the laptop platform **370**. The secondary work area **379** can be particularly sturdy. For example, it can be sturdy enough to enable a user to crush pills on the secondary work area **379**. In addition, the secondary work area **379** may be provided with a rim **378**. The rim **378** may reduce the likelihood of medication rolling off the medical cart **500** such as, for example, when a nurse tries to crush pills on the secondary work area **379**.

The bi-directional work surface **350** is shown in FIGS. **3**A, **3**B, **3**C, **4**A, and **4**B. As shown in FIGS. **3**A and **3**B, the bi-directional work surface **350** is positioned below the laptop platform **370**. The bi-directional work surface **350** is designed to move through a slot **343** in the side **341** of the work platform **340** in leftward and rightward directions to provide additional work space.

The work surface **350** can have channels **355**, **357** on its underside that engage ribs **358**, **359** formed on a plate **361** provided on a body **329** of the work platform **340**. The channels **355**, **357** are sized to receive the ribs **358**, **359** of the plate **361**. To prevent the bi-directional work surface **350** from sliding off the plate **361**, the channels **355**, **357** are closed at one end. As a result, when the second bi-directional work surface **350** slides to the right (as shown in FIG. **4**A), the channels **355** will slide along the ribs **358**, **359**. At one point, the channels **355** will slide past the ribs **359** on the left side of the plate **361** and will continue to slide along ribs **358** on the right side of the plate **361**. The second bi-directional work surface **350** will stop sliding, however, when the closed ends **363** of the channels **355** abut the inner ends of ribs **358**.

Similarly, when the second bi-directional work surface **350** slides to the left (as shown in FIG. **4**B), the channels **357** will slide along the ribs **358**, **359**. At one point, the channels **357** will slide past the ribs **358** on the right side of the plate **361** and will continue to slide along ribs **359** on the left side of the plate **361**. The second bi-directional work surface **350** will stop sliding, however, when the closed ends **365** of the channels **357** abut the inner ends of the ribs **359**.

When the bi-directional work surface **350** slides to the right or to the left, it slides in an arcuate path as a result of the channels **355**, **357** and ribs **358**, **369** (and the work surface **350**) being arcuate in shape. As a result, the second bi-directional work surface **350** is positioned closer to a user standing or sitting in front of the medical cart **500** when it is in an extended position.

A releaseable locking mechanism **1000** (shown best in FIG. **3**C) can be provided to hold the work surface **350** in a center position and to prevent it from sliding unintentionally. For example, as shown in FIGS. **3**B and **3**C, the second bi-directional work surface **350** may be provided with a projection **354** having sloped surfaces **347** and a nesting region **346**. Correspondingly, the plate **361** may be provided with a moveable pin **356** which may be, for example, a ball spring plunger that is spring-biased in upward direction (i.e., toward the work surface **350**). As a result, when the bi-directional work surface **350** is pushed into the work platform **340** (from either the left or the right), the moveable pin **356** will initially be pushed downward relative to the plate **361** by the sloped surface **347** of the projection **354**. Subsequently, the pin **356** will extend upwards into the nesting region **346** of the projection **354** and become frictionally engaged therein, thereby releasably locking the work surface **350** with respect to the work platform **340**. To move the work surface **350** out of the locked position, a force is applied to one of the exposed ends of the second bi-directional work surface **350** (to push the moveable pin **356** out of the nesting region **346** of the curved projection **354**), thereby enabling the bi-directional work surface **350** to slide freely along the ribs **358**, **359**.

Of course, the type of locking mechanism may be changed. Further, additional movable pins **356** may be provided in the plate **361** so as to enable the second bi-directional work surface **350** to be releasably locked in a corresponding number of positions.

As shown in FIGS. **5**A-**5**C, the adjustable barcode scanner holder **380** includes a flexible neck **382**, a base **386**, and a holder portion **384**. As a result of the neck **382** being flexible, the position of the holder portion **384** can be adjusted. For example, the vertical distance between the holder portion **384** and the laptop platform **370** can be adjusted. Specifically, the orientation of the holder portion **384** can be adjusted between, for example, a holding position in which a barcode scanner **385** is maintained in an upright holding position (FIG. **5**B) and a hands-free scanning position in which the holder portion **384** is adapted to hold an inverted (i.e., facing downward) barcode scanner **385**. By holding the scanner **385** in the inverted position, the holder portion **384** enables a user to pass documents between the scanner **385** and the laptop platform **370** (FIG. **5**C), without having to manually hold the scanner **385** (i.e., the scanner **385** may be operated in a hands-free manner). Moreover, the flexibility of the neck **382** enables the holder portion **384** to be adjusted to accommodate various barcode scanner sizes. In addition, the neck **382** is designed to

rotate at the base **386** thereof so that a user can turn the barcode scanner holder **380** away from the laptop platform **370**, if desired.

The barcode scanner **385** may be an integral part of the medical cart **500** or may be detachable therefrom. If the barcode scanner **385** is an integral component of the medical cart **500**, its power cord **387** may be inserted into a power cord passage **327** and connected to an electrical receptacle **904**, as later explained in detail with respect to FIGS. **11-13**. By way of contrast, the barcode scanner **385** may receive the power necessary to operate it from a laptop computer **900** when it is plugged into a USB port of the laptop computer **900**.

As shown in FIGS. **6**A-**6**C, the adjustable clipboard **390** is also designed to hold items in a hands-free manner. The clipboard **390** includes a clip **392** for holding items, such as paper. The clipboard **390** also includes conventional rails **394** attached to an L-shaped metal bracket **393** which connects the clipboard **390** to the laptop platform **370**, as shown best in FIG. **6**C. The clipboard **390** is designed to slide along the rails **394** to the left of the medical cart **500**. As a result, if a user is working on a laptop computer provided on the laptop platform **370**, the clipboard **390** can be moved from a central position (FIG. **6**B) to left of the laptop computer to allow the user to view the documents clipped to the clip **392**, as shown in FIGS. **6**A and **6**C. Of course, in other embodiments, the clipboard **390** could be designed to move to the right.

The plurality of compartments **530** face the user and move up and down with the work platform **340** (i.e., they remain in the same position relative to the laptop platform **370**), which are ergonomically desirable features. The compartments **530** may be provided with labeling portions **570**, which allow labels to be displayed on the compartments **530**. The plurality of compartments **530** enable a user (e.g., a nurse) to separately maintain medication for particular patients or for a particular room. For example, if a nurse is responsible for eight patients in a hospital ward, the medical cart **500** may be provided with a corresponding number of compartments **530** and the medication for each patient may be kept in a separate drawer assigned to that patient. As a result, the nurse could load the medication for all eight patients into eight separate drawers at one time (e.g., at the start of a medication pass) and at one location (e.g., at a pyxis machine), thereby reducing the need to travel to obtain the medication during the nurse's shift.

As shown in FIGS. **7** and **8**, the compartments **530** have projections **531** which are configured to slide in grooves **533** formed on the interior walls of the medical cart **500**. Although the compartments **530** in FIG. **1** are shown as having a generally uniform height, this is not required. In some embodiments the compartments **530** may have different heights.

For example, as shown in FIG. **7**, four short compartments **530**A-D can be removed, thereby exposing dividers **535** (which may be, for example, sheet metal). By removing the dividers **535** (e.g., by sliding them out of the medical cart **500**), as shown in the left side of the medical cart **500** in FIG. **7**, a tall space **537** may be created. As a result, a tall compartment **530**E, the height of which is substantially equal to height of the four short compartments **530**A-D when installed in the medical cart **500**, may be inserted into medication module **500** to substantially fill the space **537**. Moreover, the tall compartment **530**E will readily slide into the medical cart **500** by means of the projections **531** which are configured to slide into the grooves **533** previously occupied by the projections **531** of the upper short compartment **530**A. Thus, different size compartments **530** can be accommodated based on the desired application.

The compartments **530** may be lockable by means of a keyless entry system (the details of which are later described with respect to FIGS. **22** and **23**). Thus, the potential for unauthorized access to the compartments **530** while the nurse is caring for a particular patient is small.

The top bins **243** are provided to house items such as paperclips, pencils, etc. Similarly, the cup holders **344** are provided to secure a number of medicine cups used to pass out medications.

The removable side bins **520** can be provided to hold items, such as trash or medical equipment. The side bins **520** can be removably connected to the sides of the body **329** of the work platform **340** by conventional means, such as a hole and pin arrangement.

The work platform **340** may be raised and lowered by means of the support mechanism **320**. This provides a sitting or standing user with easy access to the work surface **350** and its associated components (e.g., laptop platform **370**, work surface **350**, compartments **530**, etc.). The support mechanism **320** allows the user to adjust the position of the work platform **340** to a comfortable position, regardless of whether the user is sitting or standing. The support mechanism **320** comprises two telescoping portions **322**, **324** (shown more clearly in the embodiment shown in FIG. **16**) and height adjustment mechanism **400** (shown in FIGS. **9**A and **9**B). The height adjustment mechanism **400** enables a standing user or a sitting user to ergonomically raise and lower the work platform **340**.

The height adjustment mechanism **400** includes an outer casing **410**, a telescoping inner casing **420**, and a driver **430**. Preferably, two or more drawer slides **422** are provided between the inner casing **420** and the outer casing **410**. Although two drawer slides **422** may be used (on opposite sides of the inner casing **420**), it is preferable to use at least three drawer slides **422**, to prevent (or at least greatly inhibit) a binding action from being applied to the height adjustment mechanism **400** by means of a cantilevered force being applied thereto.

The drawer slides **422** may be, for example, conventional drawer rails formed of stationary drawer rails **423** and corresponding rail runners **425**. If the drawer slides **422** are conventional drawer rails, one side of the drawer slides **422** (e.g., the rail runners **425**) may be fixed to outer sides of the inner casing **420** and the corresponding side of the drawer slides **422** (e.g., the stationary drawer rails **423**) may be fixed to inner sides the outer casing **420**. Further, the stationary drawer rails **423** may be provided with ball bearings to facilitate movement of the rail runner **425**. An upper end of one side of the inner casing **420** is provided with an engagement mechanism **426**. As shown, the engagement mechanism may be in the form of a window in the side of the casing **420**.

The driver **430** includes a gas driven piston **432** which, in turn, includes a body portion **436** and a telescoping strut **434**. The driver **430** is controlled by an actuator **440** to which is connected by a connector **442**.

As shown in FIG. **10**A, a base **411** of the outer casing **410** is affixed to the base **310** of the medical cart **500** by a plurality of bolts through the base **411**. A bolt **413** passes through a hole **437** in a connection portion **439** of the body portion **436** of the piston **432**, thereby immobilizing both the outer casing **410** and the piston **432**. In addition, as shown in FIG. **10**B, the inner casing **420** and the telescoping strut **434** are affixed to work platform **340** by an upper bolt **415** which passes through the inner casing **420** and through a hole **459** in a connection portion **460** of the telescoping strut **434**. As a result, when the work platform **340** is raised or lowered, the strut **434** and the inner casing **420** are correspondingly raised or lowered.

As shown in FIG. **10**B, the actuator **440** may be provided in a front portion of the medical cart **500**. Moreover, a button **444** of the actuator **440** may be provided in the handle **360** of the medical cart **500**, as shown in FIG. **1**. To lower the work platform **340**, the button **444** is pushed as a user pushes down on work platform **340** thereby causing the gas driven piston **432** to expel air. As a result, the telescoping strut **434** is withdrawn vertically into the body portion **436** of the piston **432**. As the telescoping strut **434** moves downward into the body portion **436**, the work platform **340** which is affixed to the telescoping strut **434** also moves downward. In turn, the work platform **340** forces the connection portion **460** and the inner casing **420** to move downward. If the button **444** is released while the work platform **340** is being lowered, the work platform **340** will be releaseably locked at the height at which the button **444** is released. As a result, the work platform **340** can be releaseably locked at any position between a lowest position (at which the telescoping strut **434** is maximally provided in the body portion **436** of the piston **432**) and a highest position (at which the inner casing **420** is driven upward to a maximum distance by the telescoping strut **434** of the piston **432**).

By way of contrast, to raise the work platform **340**, a user merely needs to push button **444** and lift upward on the work platform **340**. As the work platform **340** is light in weight, it will readily move upward. Moreover, in the process, the gas driven piston **432** will intake air, thereby enabling the work platform **340** to remain at the raised level, i.e., when the platform **340** is raised gas will be sucked into the piston **340** and will not be readily expellable until the button **444** is depressed. In other words, similar to the process of lowering the work platform **340**, when the work platform **340** is raised it may be releaseably locked at any position between the lowest position and the height position by releasing the button **444**. As a result, each component of the work platform **340** (including the bi-directional laptop platform **370** and the compartments **530**) is ergonomically available to a user when sitting or standing.

In addition, as shown in FIGS. **12** and **13**, the medical cart can include a power cord passage **327** that enables a power cord **902** of a laptop computer **900** (or other device) on the laptop platform **370** to be electrically connected to an electrical receptacle **904** provided in the base **310**. The electrical receptacle **904** can be connected, for example to a wall outlet via a retractable cord **906**, as later described. Preferably, the passage **327** includes an access hole **325** in the work platform **340** and extends through the telescoping portions **322**, **324**. The passage **327** terminates in a well **960** in the base **310** where the electrical connection can occur. This permits the point of connection to the electrical receptacle **904** to be enclosed.

As shown in FIG. **13**, the well **960** in the base **310** houses the electrical receptacle **904**, a retractable cord **906**, and a hatch **908** that provides access to the well **960** so that power cords **387**, **902** can be plugged into the electrical receptacle **904**. The retractable cord **906** can be plugged into an external wall outlet to recharge the battery internal to the laptop computer **900** and/or a battery-powered solenoid **240** in the keyless entry system (later described in detail). The hatch **908** works in conjunction with a cover plate **910** to enclose the base **310** including the well **960**, thereby encapsulating the components provided in the base **310** and shielding them from the environment.

The base **310**, which is moveable by means of rolling members **120** (e.g., casters), is ergonomically shaped to provide stability. The base **310** is designed to provide stability by having the rolling members **120** at corners which are outside of the footprint of the work platform **340**. Moreover, the rolling members **120** are spaced-apart to such a degree that two rolling members **123** of a medication module **100** can be located between two rolling members **121** of the base **310**, thereby enabling the medical cart **500** and the medication module **100** to nest together. Further, when the medical cart **500** is nested with a medication module **100**, it may be releaseably connected to the medication module **100** by means of a second locking mechanism **190** provided on an underside of the base **310** (shown in FIGS. **1** and **15**), also as later described in detail.

Another embodiment of a medical cart **300** is shown in FIG. **16**. In this embodiment, the removable side bins **520** of the previous cart **500** have been removed to facilitate joining the medical cart **300** with a medication module **100**. The medical cart **300**, like the medical cart **500** shown in FIG. **1**, also includes a second locking mechanism **190** which may be used to connect the medical cart **300** to a medication module **100**. In addition, the cart **300** contains fewer compartments **330** which may, like the compartments **530** of the medical cart **500** shown in FIG. **1**, be lockable by means of a keyless entry system or by a conventional key lock.

One embodiment of a medication module **100**, which may be referred to as a cart, is shown in FIGS. **17-23**. As shown in FIG. **17**, the medication module **100** includes a component body **111** having a plurality of lockable compartments **130** and which is supported by a base **110**. The medication module also may include a refuse container **140**, a depression work surface **150**, a retractable power cord **144** (shown best in FIGS. **18** and **21**B) which can be used to recharge a battery **241** of a keyless entry system **600** by means of a power cord **233** (as later described in detail), a front handle **160**, and a side handle **162**. The two handles **160**, **162** are provided so that the medication module can be pushed by a user standing in front of the compartments **130** or in front of the sidewall **112**.

The component body **111** includes two side walls **112** and a back wall **114**. The walls **112**, **114** support a plurality of compartments **130** which, for example, may be in the form of drawers. Although the compartments **130** are shown as having a generally uniform height, this is not required. Moreover, in some embodiments the compartments **130** may have different heights. As a result, a plurality of short compartments **130** may be replaced by a tall compartment **130** in the manner previously described with respect to the first medical cart **500** embodiment.

It is preferable to provide the user with the ability to lock the compartments **130**, of the medication module **100**. To reduce the likelihood of losing a key, to reduce the likelihood of having a key getting stuck (or worse broken) in a lock, and to eliminate the need for a separate lock for each compartment **130**, the compartments may be lockable by a keyless entry system **600**, as hereafter described with respect to FIGS. **22** and **23**.

The keyless entry system **600** includes a solenoid **240** (powered by a battery **241** which is electrically connected, by means of the power cord **233**, to the retractable power cord **144**), a printed circuit board ("PCB") **245**, a piston **222**, a spring-biased hinge **210** (which has an active side **211** and a stationary side **213**), a keypad **238**, and an actuating lever **224** which is connected to the piston **222** at a connection point **231** and which pivots around an axis of rotation defined by a pin **230**.

The hinge **210** can be, for example, a hinge conventionally known as a piano hinge. In a locked orientation, the active side **211** of the hinge **210** is provided in an engagement position **215** in which the active side **211** is positioned to engage a notch **132** formed on a compartment **130** (i.e., each

US007594668B2

(12) **United States Patent**
Arceta et al.

(10) **Patent No.: US 7,594,668 B2**
(45) **Date of Patent: Sep. 29, 2009**

(54) **MEDICAL CART, MEDICATION MODULE, HEIGHT ADJUSTMENT MECHANISM, AND METHOD OF MEDICATION TRANSPORT**

(75) Inventors: **Radmond Vincent Arceta**, Manassas, VA (US); **Craig Kevin Rogers**, Stephens City, VA (US); **Kevin Thomas Fitzpatrick**, Winchester, VA (US); **Bryan Scott Ritchie**, Clear Brook, VA (US); **Marin John Philpott**, Winchester, VA (US); **Christina Louise Fortner**, Stephens City, VA (US)

(73) Assignee: **Rubbermaid Commercial Products LLC**, Winchester, VA (US)

(*) Notice: Subject to any disclaimer, the term of this patent is extended or adjusted under 35 U.S.C. 154(b) by 0 days.

(21) Appl. No.: **12/193,346**

(22) Filed: **Aug. 18, 2008**

(65) **Prior Publication Data**

US 2009/0015116 A1 Jan. 15, 2009

Related U.S. Application Data

(63) Continuation of application No. 10/783,030, filed on Feb. 23, 2004, now abandoned.

(60) Provisional application No. 60/518,649, filed on Nov. 12, 2003, provisional application No. 60/484,658, filed on Jul. 7, 2003, provisional application No. 60/448,920, filed on Feb. 24, 2003.

(51) **Int. Cl.**
B62B 3/02 (2006.01)

(52) **U.S. Cl.** **280/47.35**; 108/147.19

(58) **Field of Classification Search** 280/47.34, 280/47.35, 79.11, 79.3, 638, 651, 33.992; 108/147.19, 147.21; 235/431
See application file for complete search history.

(56) **References Cited**

U.S. PATENT DOCUMENTS

3,910,659	A *	10/1975	Peterson	312/226
4,071,740	A *	1/1978	Gogulski	235/431
4,440,096	A *	4/1984	Rice et al.	108/3
4,894,600	A *	1/1990	Kearney	318/649
5,058,911	A *	10/1991	Hunter et al.	280/47.35
5,151,581	A *	9/1992	Krichever et al.	235/454
5,174,223	A *	12/1992	Nagy et al.	108/50.01
5,257,767	A *	11/1993	McConnell	248/284.1
5,734,839	A *	3/1998	Enoki et al.	705/20
5,841,361	A *	11/1998	Hoffman	340/5.54
6,050,660	A *	4/2000	Gurley	312/249.1
6,435,407	B1 *	8/2002	Fiordelisi	235/383
6,484,939	B1 *	11/2002	Blaeuer	235/383
6,493,220	B1 *	12/2002	Clark et al.	361/679.41
6,578,501	B1 *	6/2003	Moore	108/147
6,615,744	B1 *	9/2003	Eckstein et al.	108/147.2
6,626,445	B2 *	9/2003	Murphy et al.	280/47.34
6,682,030	B2 *	1/2004	Santoro et al.	248/188.5

(Continued)

Primary Examiner—Frank B Vanaman
(74) *Attorney, Agent, or Firm*—Foley & Lardner LLP

(57) **ABSTRACT**

A medical cart is described and includes a work platform having a work surface and at least one compartment, a base, and a height adjustment mechanism for adjusting the height of the work platform relative to the base. A medication module is described and includes a plurality of compartments. The medical cart can be joined with a medication module. In addition, a plurality of medication modules can joined to form a train. The medical cart and medication module can be used collectively and individually in a variety of methods for transferring medicine.

7 Claims, 20 Drawing Sheets

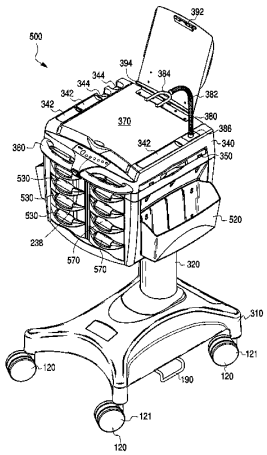

compartment **130** has a similar notch **132**), if a user attempts to withdraw the compartment **130**. In other words, as a result of the engagement between the active side **211** of the spring **210** and the notches **132** of the compartments **130**, the compartments **130** can not be readily withdrawn out of the medication module **100**.

To unlock the compartments **130**, a user first enters a security code using buttons of the keypad **238** (to verify access to the medication module **100**) and may, if required, then enter an unlock code on the keypad **238**. In response, the PCB **245** sends an unlock signal to the solenoid **240**. When the unlock signal is received by the PCB **245**, the solenoid **240** withdraws the piston **222**, thereby causing the end of actuating lever **224** in contact with the active side **211** of the spring **210** to swing outward on the pin **230**. As a result, the actuating lever **224** causes the active side **211** of the spring **210** to swing out of the engagement position **215** and into a disengagement position **217**. In other words, the active side **211** swings toward the stationary side **213** of the spring **210** so that the two sides **211**, **213** rest against each other. When the sides **211**, **213** of the spring **210** rest against each other, the notches **132** of the compartments **130** will no longer be inhibited by the active side **211** of the spring **210**. As a result, the compartments **130** may be readily removed from the medication module **100**.

The compartments **130** can be relocked by pressing a "lock" button (not labeled) on the keypad **238** or by entering a lock code on the keypad **238**; in either case, the PCB **245** will send a lock signal to the solenoid **240** instructing it to outwardly push the piston **222**, thereby causing the end of the actuating lever **224** in contact with the active side **211** of the spring **210** to swing inward on the pin **230**. As a result, the active side **211** of the spring **210** will swing back into the engagement position **215** by means of the spring-biased nature of the spring **210**. In addition, and as a safety means, a timer may be provided in the keypad **238**, PCB **245**, or in the solenoid **240** which will, when a timer count is satisfied, automatically instruct the piston **222** to be outwardly pushed, thereby causing the active side **211** of the spring **210** to retract into the engagement position **215**.

If a compartment **130** is removed when either a lock signal is sent to the solenoid **240** or when a timer count is satisfied (and the active side **211** of the spring **210** is provided in the engagement position **215**), the compartment **130** may be inserted into the medication module without entering an unlock code. Specifically, the notches **132** of the compartments **130** have sloped faces **133** thereon which, when the compartment **130** is pushed into the medication module **100**, will abut the active side **211** of the spring **210**. By continuing to push the compartment **130**, the sloped face **133** will cause the active side **211** of the spring **210** to collapse into the disengagement position **217**, i.e., the spring-bias of the spring **210** will be overcome. After the sloped face **133** passes the active side of the spring **210**, the active side **211** will snap back into the engagement position **215** (by means of the spring-bias), thereby locking the compartment **130** in the medication module **100**.

An additional safety (and access) measure may be provided to address a situation in which the keypad **238** fails or the battery powered solenoid **240** loses power. Specifically, the compartments **130** may be unlocked manually by a hard (back-up) lock **220**, as shown in FIGS. **17** and **23**. By means of the hard lock **220**, a key can be used to manually rotate the actuating lever **224**, thereby pushing the active side **211** of the spring **210** or enabling it to swing outward under the force of the spring bias. In other words, the key can be used to move the active side **211** manually out of the engagement position **215** or to allow the active side **211** to swing (under the spring-biased force) into the engagement position **215**.

Although the keyless entry system **600** has been described with respect to the medication module **100**, the same system **600** can be applied to the compartments **330**, **530** of the medical carts **300**, **500**, respectively.

As a result of the ability to lock the compartments **130**, **330**, **530**, a nurse can use a medication module **100** and/or medical cart **300**, **500** to deliver medication to various patients, without worrying about unauthorized access to the compartments **130**, **330**, **530** while attending to a particular patient. Moreover, as a result of the keypad **238**, a nurse does not have to worry about losing a key, except for the hard lock key which may be kept at a central location.

The base **110**, which is supported by a plurality of rolling members **120** (e.g., casters), is designed to provide stability to the frame **111**, similar to the base **310** of the medical cart **300**, **500**. However, the base **110** is also designed such that the two of the rolling members **121** on one side of the module **100** are spaced apart farther than the two rolling members **123** on the other side of the module **100**. As a result, when two medication modules **100** (or a medication module **100** and a medical cart **300**, **500**) are brought together, the closer spaced rolling members **123** of one module **100** can fit between the farther spaced rolling members **121** of the other module **100** (or medical cart **300**, **500**), thereby enabling the modules **100** (or module **100** and medical cart **300**, **500**) to nest closer together to form a train **200**.

As a result of the ability to nest the bases **110** of a plurality of consecutive medication modules **100** in a train **200** (as later described in detail), the sidewalls **112**, **112** of adjacent modules **100** can be positioned in close proximity, thereby creating a small footprint for the train **200**. Similarly, as a result of the ability to nest the base **110** of a medication module **100** and the base **310** of a medical carts **300**, **500**, the compartments of the medication module **100** can be in close proximity to the work platform **340** of the medical cart **300**, **500**, thereby providing a user with easy access thereto.

To releaseably link the nested medication modules **100** (or a medication module **100** and nested a medical cart **300**, **500**), the base **110** of the medication module **100** is provided with a connection mechanism **171**. The connection mechanism **171** includes an actuator **180**, a first locking mechanism **170**, and a second locking mechanism **190**, as best shown in FIGS. **19** and **20**. The actuator **180**, which may be in the form of a foot pedal, includes a pivot rod **182**. When the foot pedal **180** is depressed, the pivot rod **182** is configured to rotate within rings **192** from a resting position to an active position, thereby activating the first locking mechanism **170**.

The first locking mechanism **170** includes beams **188**, cover plates **186** having sloped surfaces **194**, and catches **184** which comprise cavities **187**. When the rod **182** of the actuator **180** rotates, it pulls the beams **188** toward the center of the base **110**. In turn, the beams **188** cause the cover plates **186** to rotate toward the center of the base **110**. As the cover plates **186** rotate, they expose the cavities **187** in the catches **184**. Correspondingly, when the actuator **180** is released, the rod **182** rotates back to the resting position, thereby pushing the beams **188** away from the center of the base **110** and, in turn, rotating the cover plates **186** to enclose the cavities **187**.

When the cavities **187** are closed, they are designed to releaseably contain posts **197** of a second locking mechanism **190** of another medication module **100** or of a medical cart **300**, **500**. In addition, although the posts **197** may be provided separately on the base **110**, **310**, of the medication module **100** and medical carts **300**, **500**, they are preferably integrally formed by means of a crossbar **196**. Regardless of the design

of the posts **197**, they enable a medication module **100** to be joined to another medication module **100** to form a train **200**, as shown in FIG. **20**.

A train **200** of medication modules **100**A-**100**C can be formed by releaseably aligning the posts **197** of a second locking mechanism **190** of one medication module **100**A with the cover plates **186** of a first locking mechanism **170** of an adjacent medication module **100**B. By pushing the modules **100**A, **100**B toward each other, the posts **197** will slide along the sloped surfaces **194** of the cover plates **186**, thereby causing the cover plates **186** to rotate. As the cover plates **186** rotate, the cavities **187** will be exposed and the posts **197** will slide into them. After the posts **197** slide into the cavities **187**, the cover plates **186** will retract, thereby locking the posts **197** in the cavities. Of course, to add a third medication module **100**C, the posts **197** of the second medication module **100**B would be similarly inserted into the cavities **187** of the third medication module **100**C.

As the medical carts **300**, **500** also include second locking mechanisms **190**, the medication module can be releaseably joined with the medical carts **300**, **500**. For example, as shown in FIGS. **21**A and **21**B, the medication module **100** can be releaseably joined with the medical cart **300** shown in FIG. **16**. Of course, to release the medication module **100** from the medical carts **300**, **500**, a user (e.g., a nurse) would depress the foot pedal actuator **180** (shown in FIG. **21**A) to disengage the first locking mechanism **170** formed under the base **110** of the medication module **100** and the second locking mechanism **190** formed under the base **310** of the medical cart **300**, **500**.

As shown in FIG. **24**, a train **200** of medication modules **100** can be loaded with medication at a central location (e.g., pharmacy) **700**; the number of medication modules **100** may depend on the number of medical carts **300**, **500** that a hospital has on a particular floor on which the medication is to be delivered. A pharmacy technician can then drive the train **200** to a second location **800** at which the individual medication modules **100** can be separated from the train **200**. In addition, the medication modules **100** may be joined (by means of the first connection mechanism **171** thereon) to a medical cart **300**, **500** (by means of the second locking mechanism **190** thereon). One or more nurses **750** can then drive the separated medication modules **100** (with or without a medical cart **300**, **500** affixed thereto) to respective third locations (not shown) at which the nurse may administer medication (contained in the compartments **130**) to a distinct plurality of patients. When the nurse(s)'s rounds are complete, the empty medication modules **100** can be separated from attached medical carts **300**, **500** (if any) and rejoined to form a train **200** of medication modules **100**. The train **200** of medication modules **100** may then be returned to the central location **700** for refilling so that the method of medication transport may be repeated.

Similar to the aforementioned method, a modification may be made. Specifically, there may arise situations in which a nurse **750** does not want to push a combined medication module **100** and medical cart **300**, **500** but wants to enjoy the functionality of the medical cart **300**, **500**. In these situations, the nurse **750** may unlock the compartments **130** of medication module **100** at the second location **800** and remove one or more compartments **130**. The removed compartments **130** could then be exchanged with compartments **530** in the medical cart **500** or placed on the work platform of the medical cart **300** so that the medical cart **300**, **500** then contains the medications which the nurse **750** needs to deliver.

If the compartments **130** of the medication module **100** are exchanged with the compartments **530** of the medical cart **500**, the medication modules **100** containing the empty compartments **530** of the medical carts **500** may then be taken back to central location **700** for refilling while the original medication is being taken by nurses to the patients, so that the method of medication transport can be repeated.

Although the aforementioned describes embodiments of the invention, the invention is not so restricted. It will be apparent to those skilled in the art that various modifications and variations can be made to the disclosed embodiments of the present invention without departing from the scope or spirit of the invention. Accordingly, these other medication modules, medical carts, height adjustment mechanisms, keyless entry systems, and methods of medication transport are fully within the scope of the claimed invention. Therefore, it should be understood that the apparatuses and methods described herein are illustrative only and are not limiting upon the scope of the invention, which is indicated by the following claims.

What is claimed is:

1. A cart comprising:

a work platform including a laptop platform, a work surface separate from the laptop platform, and compartments for containing items;

a base configured to be movable in at least a rearward direction; and

a height adjustment mechanism for adjusting the height of the work platform relative to the base,

wherein the base includes a portion that projects from the height adjustment mechanism in a forward direction that is substantially opposite to the rearward direction,

wherein the work platform includes a portion that projects from the height adjustment mechanism in the forward direction, the compartments are disposed in the portion of the work platform that projects from the height adjustment mechanism in the forward direction, and the compartments are configured to permit a user facing in the rearward direction to access an item within the compartments,

wherein the laptop platform can be moved in at least one of the forward and rearward directions,

wherein the work surface can be moved in at least one of a leftward and rightward direction along an arcuate path that faces the forward direction,

wherein the height adjustment mechanism is configured to releasably lock the work platform at a plurality of heights, and

wherein the height adjustment mechanism comprises:

a stationary casing connected to the base;

a telescoping casing connected to the work platform and configured to move relative to the stationary casing;

at least two drawer slides disposed between the stationary casing and the telescoping casing;

a driver configured to releasably lock the telescoping casing relative to the stationary casing; and

an actuator for controlling the driver.

2. The cart of claim **1**, wherein the driver includes a piston that, in response to a user's actuation of the actuator, permits gas to flow out of the piston during lowering of the height of the work platform, and that, in response to a user's actuation of the actuator, permits gas to flow into the piston during increasing of the height of the work platform.

3. A cart comprising:

a work platform including a work surface and compartments for containing items;

a base configured to be movable in at least a rearward direction; and

a height adjustment mechanism for adjusting the height of the work platform relative to the base,

wherein the base includes a portion that projects from the height adjustment mechanism in a forward direction that is substantially opposite to the rearward direction,

wherein the work platform includes a portion that projects from the height adjustment mechanism in the forward direction, the compartments are disposed in the portion of the work platform that projects from the height adjustment mechanism in the forward direction, and the compartments are configured to permit a user facing in the rearward direction to access an item within the compartments,

wherein the height adjustment mechanism is configured to releasably lock the work platform at a plurality of heights,

wherein the height adjustment mechanism comprises:

a stationary casing connected to the base;

a telescoping casing connected to the work platform and configured to move relative to the stationary casing;

at least two drawer slides disposed between the stationary casing and the telescoping casing;

a driver configured to releasably lock the telescoping casing relative to the stationary casing; and

an actuator for controlling the driver, and

wherein the actuator is disposed above the compartments and on the portion of the work platform that projects in the forward direction.

4. A cart comprising:

a work platform including a work surface and at least one compartment for containing an item within the compartment;

a base configured to be movable in at least a rearward direction; and

a height adjustment mechanism for adjusting the height of the work platform relative to the base, wherein the height adjustment mechanism is configured to releasably lock the work platform at a plurality of heights, the height adjustment mechanism comprising:

a stationary casing connected to the base;

a telescoping casing connected to the work platform and configured to move relative to the stationary casing;

a driver configured to releasably lock the telescoping casing relative to the stationary casing; and

an actuator for controlling the driver,

wherein the base includes a portion that projects from the height adjustment mechanism in a forward direction that is substantially opposite to the rearward direction,

wherein the work platform includes a portion that projects from the height adjustment mechanism in the forward direction, the compartment is disposed in the portion of the work platform that projects from the height adjustment mechanism in the forward direction, and the compartment is configured to permit a user facing in the rearward direction to access an item within the compartment,

wherein the actuator is disposed above the compartment and on the portion of the work platform that projects in the forward direction.

5. The cart of claim **4**, further comprising a handle disposed on the work platform, wherein the actuator is disposed on the handle.

6. A cart comprising:

a work platform including a laptop platform, a work surface separate from the laptop platform, and compartments for containing items;

a base configured to be movable in at least a rearward direction; and

a height adjustment mechanism for adjusting the height of the work platform relative to the base,

wherein the base includes a portion that projects from the height adjustment mechanism in a forward direction that is substantially opposite to the rearward direction,

wherein the work platform includes a portion that projects from the height adjustment mechanism in the forward direction, the compartments are disposed in the portion of the work platform that projects from the height adjustment mechanism in the forward direction, and the compartments are configured to permit a user facing in the rearward direction to access an item within the compartments,

wherein the laptop platform can be moved in at least one of the forward and rearward directions,

wherein the work surface can be moved in at least one of a leftward and rightward direction along an arcuate path that faces the forward direction, and

wherein the work surface is configured to move in the leftward or rightward direction through a slot in a side of the work platform.

7. A cart comprising:

a work platform including a laptop platform, a work surface separate from the laptop platform, and compartments for containing items;

a base configured to be movable in at least a rearward direction; and

a height adjustment mechanism for adjusting the height of the work platform relative to the base,

wherein the base includes a portion that projects from the height adjustment mechanism in a forward direction that is substantially opposite to the rearward direction,

wherein the work platform includes a portion that projects from the height adjustment mechanism in the forward direction, the compartments are disposed in the portion of the work platform that projects from the height adjustment mechanism in the forward direction, and the compartments are configured to permit a user facing in the rearward direction to access an item within the compartments,

wherein the laptop platform can be moved in at least one of the forward and rearward directions,

wherein the work surface can be moved in at least one of a leftward and rightward direction along an arcuate path that faces the forward direction, and

wherein the work platform includes a secondary work surface that is exposed when the laptop platform moves in the forward or rearward direction.

* * * * *

EXHIBIT B

US008215650B2

(12) **United States Patent**
Arceta et al.

(10) **Patent No.: US 8,215,650 B2**
(45) **Date of Patent: Jul. 10, 2012**

(54) **MEDICAL CART, MEDICATION MODULE, HEIGHT ADJUSTMENT MECHANISM, AND METHOD OF MEDICATION TRANSPORT**

(75) Inventors: **Radmond Vincent Arceta**, Manassas, VA (US); **Craig Kevin Rogers**, Stephens City, VA (US); **Kevin Thomas Fitzpatrick**, Winchester, VA (US); **Bryan Scott Ritchie**, Clear Brook, VA (US); **Marin John Philpott**, Winchester, VA (US); **Christina Louise Fortner**, Stephens City, VA (US)

(73) Assignee: **Rubbermaid Incorporated**, Huntersville, NC (US)

(*) Notice: Subject to any disclaimer, the term of this patent is extended or adjusted under 35 U.S.C. 154(b) by 0 days.

(21) Appl. No.: **13/187,328**

(22) Filed: **Jul. 20, 2011**

(65) **Prior Publication Data**

US 2011/0272902 A1 Nov. 10, 2011

Related U.S. Application Data

(60) Continuation of application No. 12/550,771, filed on Aug. 31, 2009, now abandoned, which is a division of application No. 12/193,346, filed on Aug. 18, 2008, now Pat. No. 7,594,668, which is a continuation of application No. 10/783,030, filed on Feb. 23, 2004, now abandoned, which is a continuation-in-part of application No. 29/196,712, filed on Jan. 2, 2004, now Pat. No. Des. 515,767, and a continuation-in-part of application No. 29/196,713, filed on Jan. 2, 2004, now Pat. No. Des. 518,267, and a continuation-in-part of application No. 29/196,714, filed on Jan. 2, 2004, now Pat. No. Des. 517,768.

(60) Provisional application No. 60/448,920, filed on Feb. 24, 2003, provisional application No. 60/484,658, filed on Jul. 7, 2003, provisional application No. 60/518,649, filed on Nov. 12, 2003, provisional application No. 60/532,900, filed on Dec. 30, 2003.

(51) **Int. Cl.**
B62B 3/02 (2006.01)

(52) **U.S. Cl.** **280/47.35**; 108/147.19

(58) **Field of Classification Search** 280/47.34, 280/47.35, 79.11, 79.2, 33.991, 33.992, 638, 280/651; 108/147.19, 147.21; 235/431
See application file for complete search history.

(56) **References Cited**

U.S. PATENT DOCUMENTS

D146,375	S	2/1947	Obrig
3,024,036	A	3/1962	Reynolds
3,031,207	A	4/1962	Bard
3,208,768	A	9/1965	Hulbert
3,910,659	A	10/1975	Peterson

(Continued)

OTHER PUBLICATIONS

iCart PointofCare Brochure (Lionville), Jun. 2004, 2 pages.

(Continued)

Primary Examiner — Frank Vanaman
(74) *Attorney, Agent, or Firm* — Foley & Lardner LLP

(57) **ABSTRACT**

A medical cart includes a work platform having a work surface and at least one compartment, a base, and a height adjustment mechanism for adjusting the height of the work platform relative to the base. A medication module includes a plurality of compartments. The medical cart can be joined with a medication module. In addition, a plurality of medication modules can be joined to form a train. The medical cart and medication module can be used collectively and individually in a variety of methods for transferring medicine.

24 Claims, 20 Drawing Sheets

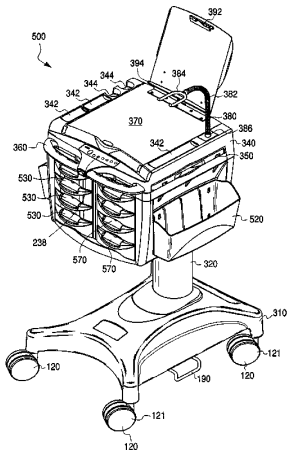

U.S. PATENT DOCUMENTS

D240,629	S	7/1976	Cope	
4,071,740	A	1/1978	Gogulski	
4,114,965	A *	9/1978	Oye et al.	312/209
4,127,202	A	11/1978	Jennings et al.	
4,440,096	A	4/1984	Rice et al.	
4,735,469	A	4/1988	Liggett	
4,875,696	A	10/1989	Welch et al.	
4,894,600	A	1/1990	Kearney	
4,967,928	A	11/1990	Carter	
4,976,450	A *	12/1990	Ellefson	280/79.11
4,986,555	A	1/1991	Andreen	
5,058,911	A	10/1991	Hunter et al.	
5,151,581	A	9/1992	Krichever et al.	
5,174,223	A	12/1992	Nagy et al.	
5,257,767	A	11/1993	McConnell	
D349,594	S	8/1994	Bonazza	
D367,381	S	2/1996	Licari	
D387,168	S	12/1997	Edelman et al.	
D389,917	S	1/1998	Hornback et al.	
5,704,625	A	1/1998	Presnell et al.	
D390,733	S	2/1998	Brunner et al.	
5,734,839	A	3/1998	Enoki et al.	
5,758,848	A	6/1998	Beule	
5,841,361	A	11/1998	Hoffman	
D402,529	S	12/1998	Husted	
5,842,708	A	12/1998	Miyaoka	
D410,230	S	5/1999	Witte	
6,050,660	A	4/2000	Gurley	
6,073,942	A	6/2000	Heneveld, Sr.	
D438,952	S	3/2001	Cimino et al.	
6,219,587	B1	4/2001	Ahlin et al.	
D441,513	S	5/2001	Mullen et al.	
6,339,732	B1 *	1/2002	Phoon et al.	700/237
D458,780	S	6/2002	Siepmann et al.	
D459,477	S	6/2002	Stocks et al.	
6,418,854	B1	7/2002	Kraft	
6,435,407	B1	8/2002	Fiordelisi	
D462,674	S	9/2002	Siepmann et al.	
D465,895	S	11/2002	Pfefferle et al.	
6,484,939	B1	11/2002	Blaeuer	
6,493,220	B1	12/2002	Clark et al.	
D468,420	S	1/2003	Bolmsjo	
6,578,501	B1	6/2003	Moore	
6,615,744	B1	9/2003	Eckstein et al.	
6,626,445	B2	9/2003	Murphy et al.	
D481,847	S	11/2003	Van Landingham, Jr.	
D482,173	S	11/2003	Van Landingham, Jr.	
6,682,030	B2	1/2004	Santoro et al.	
D486,915	S	2/2004	Warschewske et al.	
D487,178	S	2/2004	Cuzzocrea	
6,721,178	B1	4/2004	Clark et al.	
6,722,673	B1	4/2004	Hamlin	
D497,462	S	10/2004	Ryan	
D500,575	S	1/2005	Lucas	
6,860,494	B1	3/2005	Chisholm	
6,874,807	B1	4/2005	Labadle et al.	
6,883,439	B1	4/2005	Moore	
7,104,556	B1	9/2006	Young	
7,490,837	B2	2/2009	Pond et al.	
2002/0125664	A1	9/2002	Eriksson et al.	
2002/0165641	A1	11/2002	Manalang et al.	

OTHER PUBLICATIONS

Notice of Allowance dated Jul. 7, 2005 received in corresponding U.S. Appl. No. 29/196,712.
Notice of Allowance dated Jun. 1, 2005 received in corresponding U.S. Appl. No. 29/196,714.
Notice of Allowance dated May 31, 2005 received in corresponding U.S. Appl. No. 29/196,713.
Notice of Allowance received in U.S. Appl. No. 12/193,346 dated May 20, 2009.
Office Action received in U.S. Appl. No. 10/783,030 dated Jun. 26, 2006.
Office Action received in U.S. Appl. No. 10/783,030 dated Feb. 19, 2008.
Office Action received in U.S. Appl. No. 10/783,030 dated Jun. 13, 2007.
Office Action dated Jan. 28, 2011 received in corresponding U.S. Appl. No. 12/550,771.
Office Action dated Jun. 24, 2011 received in corresponding U.S. Appl. No. 12/550,771.
Photo Image of EMS Cart With Optional Locking Drawers, 1 page.
Ritter Installation and Operation Manual for 345 Procedures Cart, © Midmark Corporation—1998, 11 pages.
Supplemental Notice of Allowability dated Dec. 28, 2005 received in corresponding U.S. Appl. No. 29/196,713.
Supplemental Notice of Allowability dated Nov. 25, 2005 received in corresponding U.S. Appl. No. 29/196,712.
WWW.HOISE.COM/VMW/LV-VM-03-01-24.HTML; Virtual Medical Worlds, NorthEast Medical Center in North Carolina First to Test New EMS Mobile Clinical Workstation, Atlanta, Feb. 5, 2001, 2 pages.
WWW.INFOLOGIXSYS.COM; InfoLogix Web Page Printouts for Mobile Cart Computing: Info Carts, Organizer Cart, Mobile Laptop/ Integrated Flat Screen/Peripheral Cart, Variable Height Laptop Cart, SL-Cart and SL-Laptop Cart, © 2002-2003, 7 pages.
WWW.LIONVILLE.COM/NEWS1.HTML; Lionville Webpage Capture, Mar.-Apr. © 2004, 3 pages.
WWW.NAWARE.COM; NaWare Brochure, Nov. 5, 2001, 4 pages.

* cited by examiner

Fig. 1

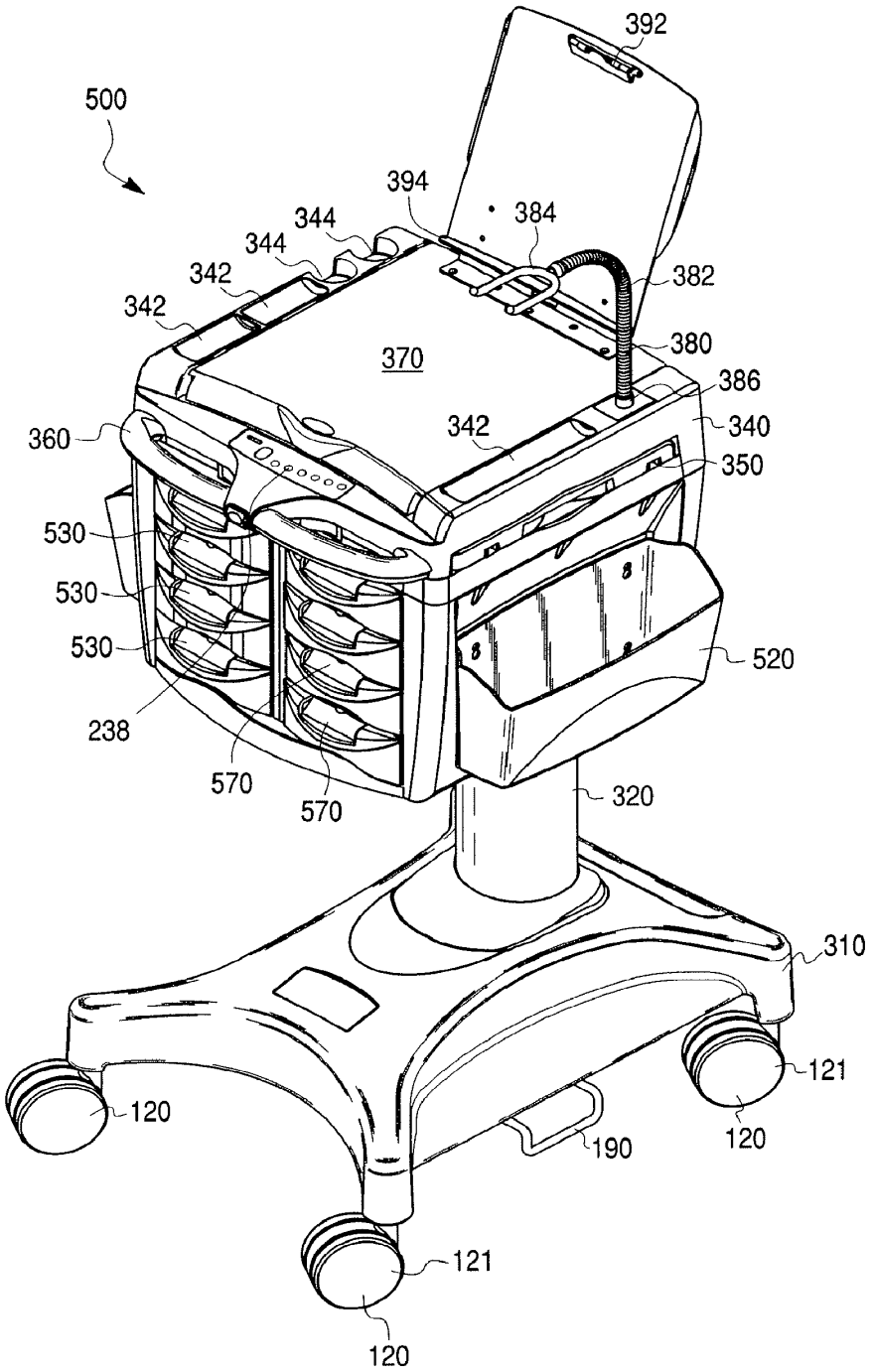
392
500
394
384
344
344
342
342
382
380
370
386
340
360
342
350
530
530
530
520
238
570
570
320
310
121
120
120
190
121
120

Fig. 2A

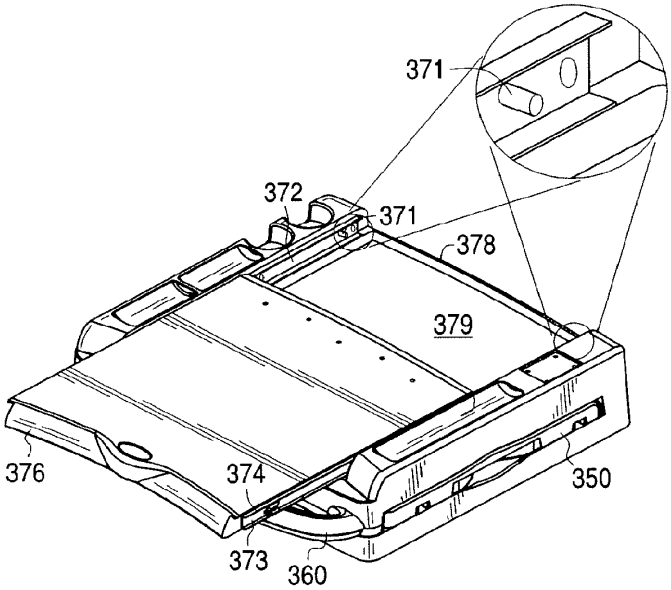
371
372
371
378
379
376
374
350
373
360

Fig. 2B

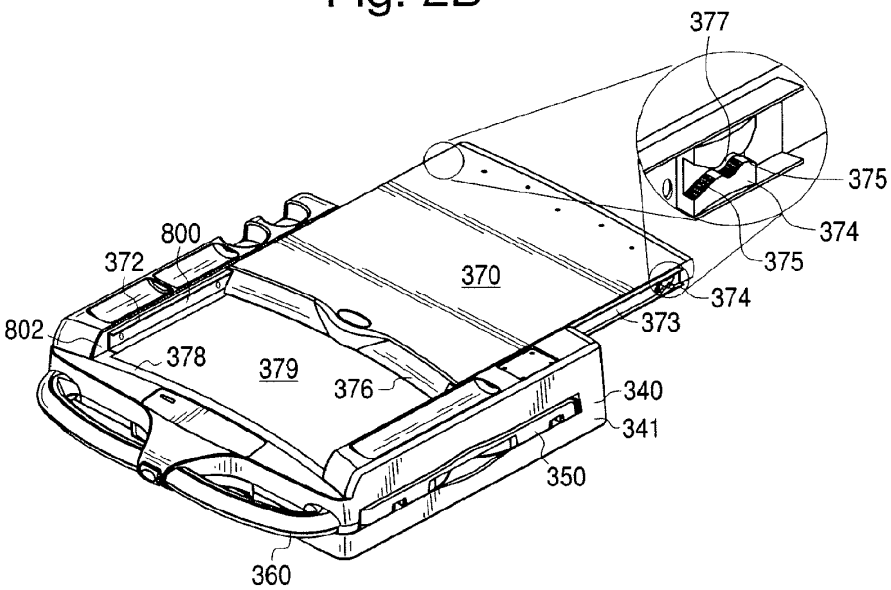
377
375
374
375
800
372
370
374
373
802
378
379
376
340
341
350
360

Fig. 3A

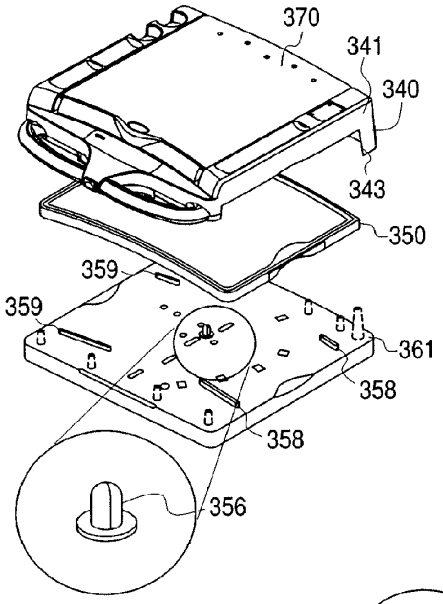

Fig. 3B

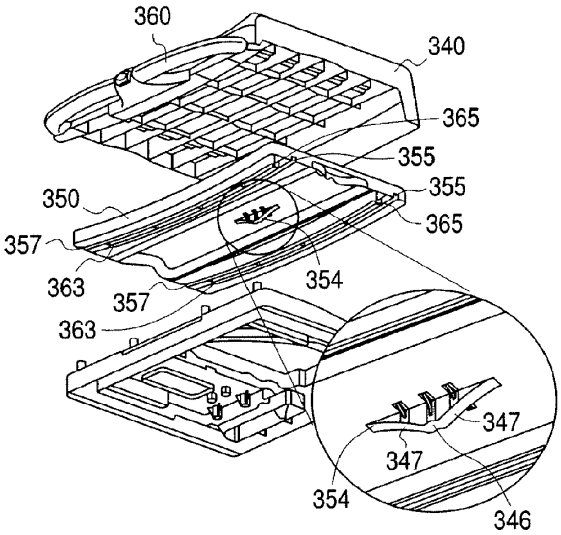

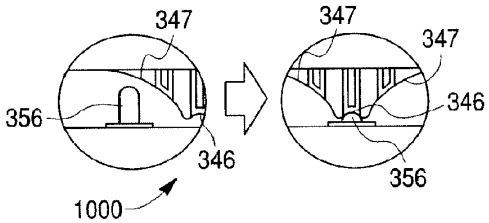

Fig. 3C

Fig. 4A

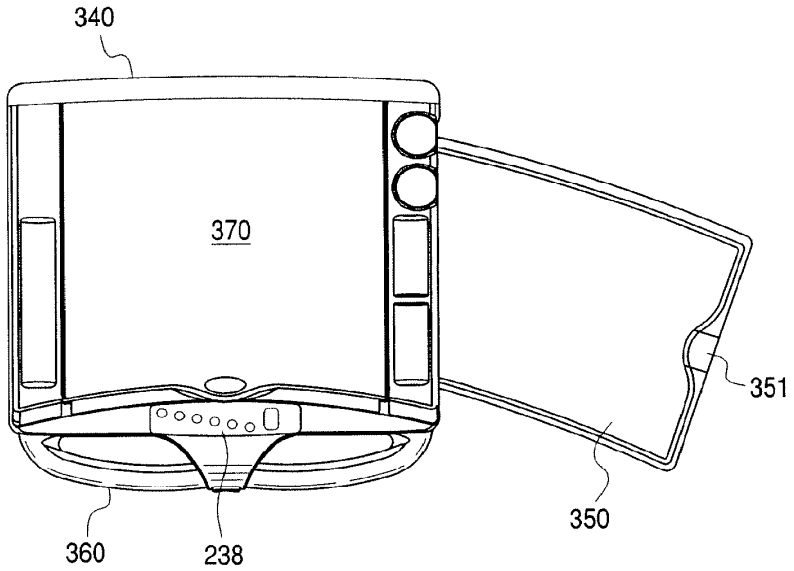

Fig. 4B

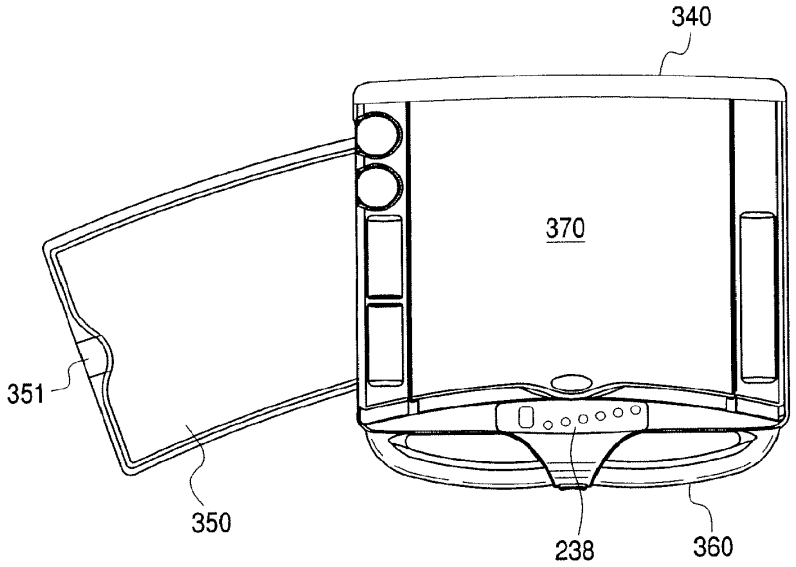

U.S. PATENT DOCUMENTS

6,721,178 B1 * 4/2004 Clark et al. 361/679.4
6,722,673 B1 * 4/2004 Hamlin 280/47.35
6,860,494 B1 * 3/2005 Chisholm 280/47.35
6,883,439 B1 * 4/2005 Moore 108/147
7,490,837 B2 * 2/2009 Pond et al. 280/47.35
2002/0165641 A1 * 11/2002 Manalang et al. 700/237

* cited by examiner

Fig. 5A

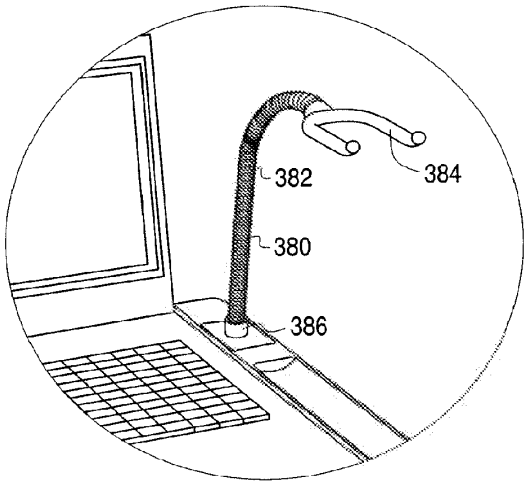

Fig. 5B

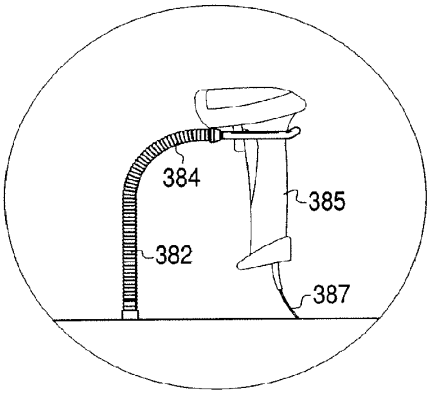

Fig. 5C

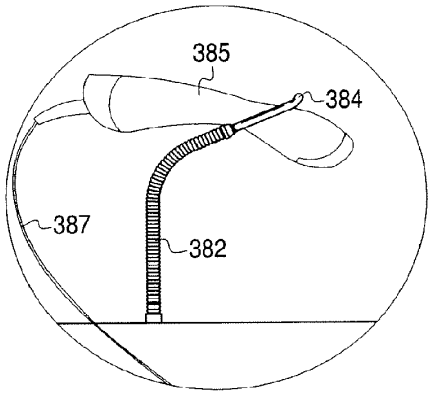

Fig. 6A

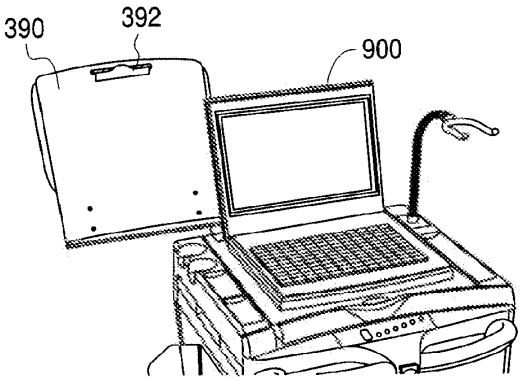

Fig. 6B

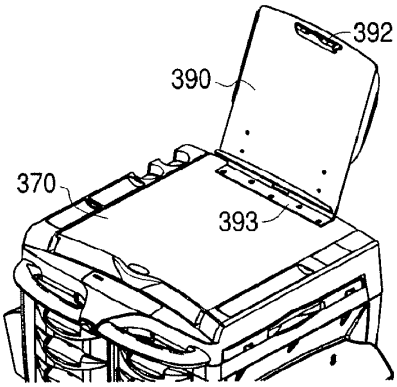

Fig. 6C

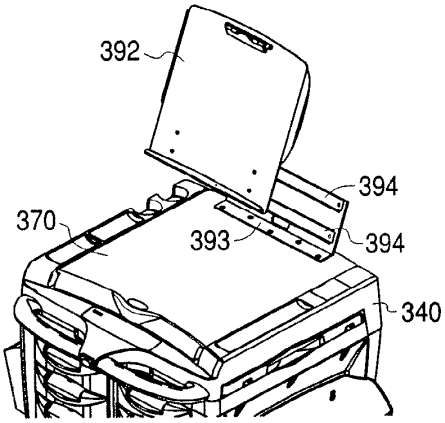

Fig. 7

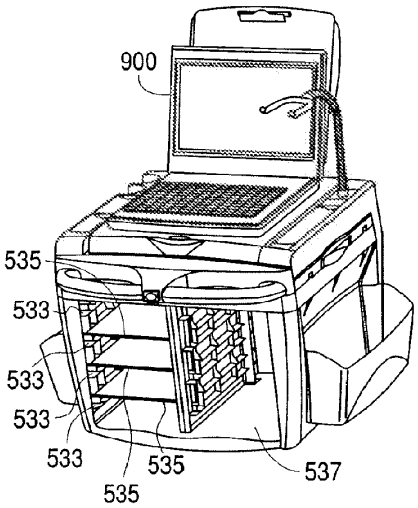
900
535
533
533
533
533
535
535
537

Fig. 8

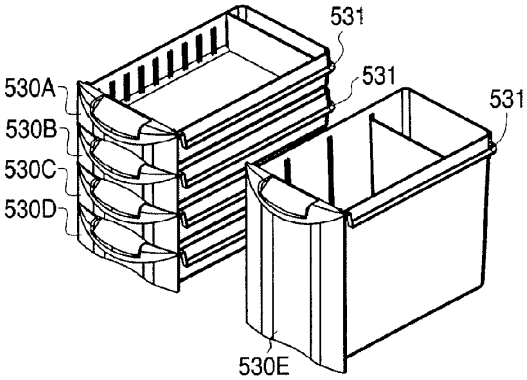
531
531
531
530A
530B
530C
530D
530E

Fig. 9A

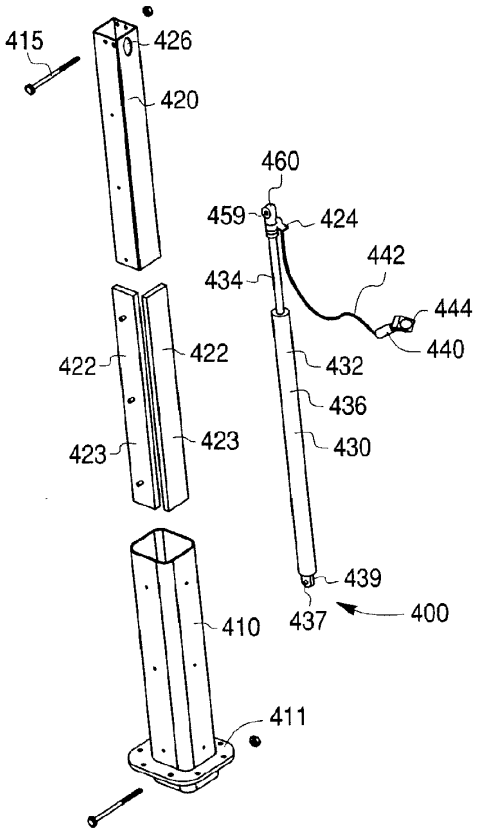
415
426
420
460
459
424
442
434
444
440
422
422
432
436
423
423
430
439
437
400
410
411

Fig. 9B

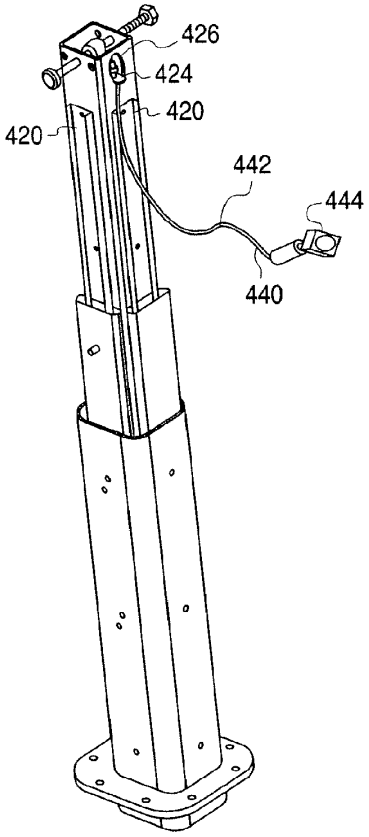
426
424
420
420
442
444
440

Fig. 10A

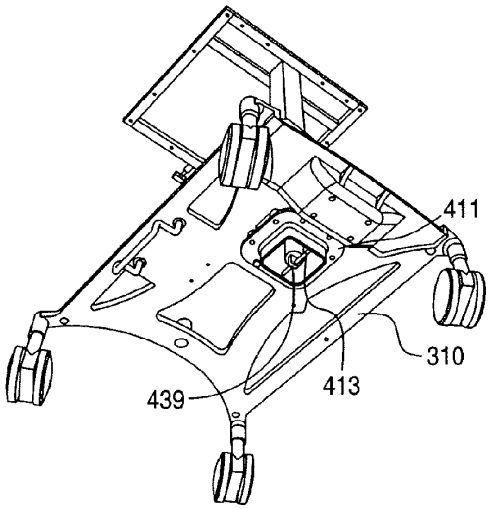

Fig. 10B

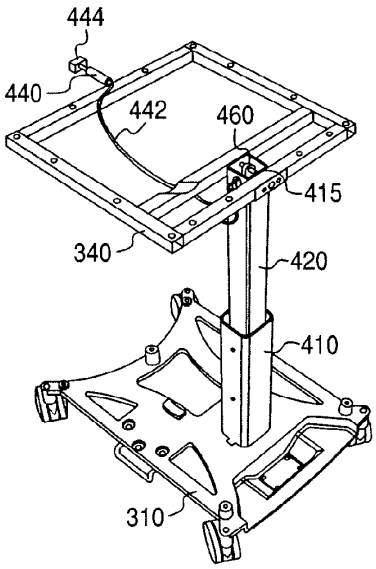

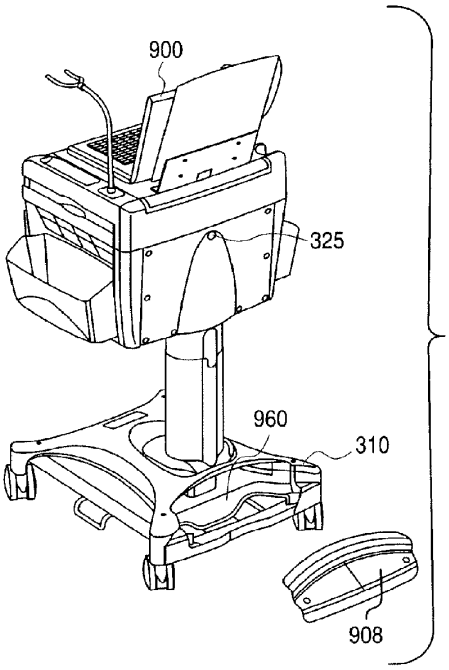

Fig. 11

Fig. 12

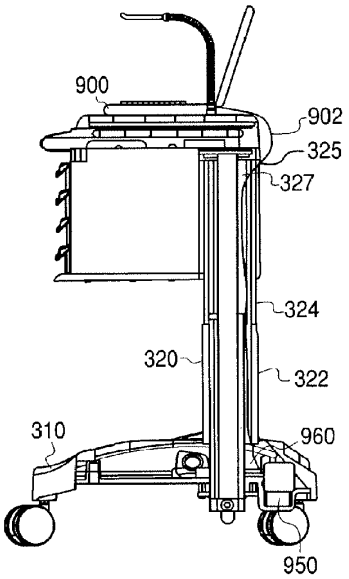

Fig. 13

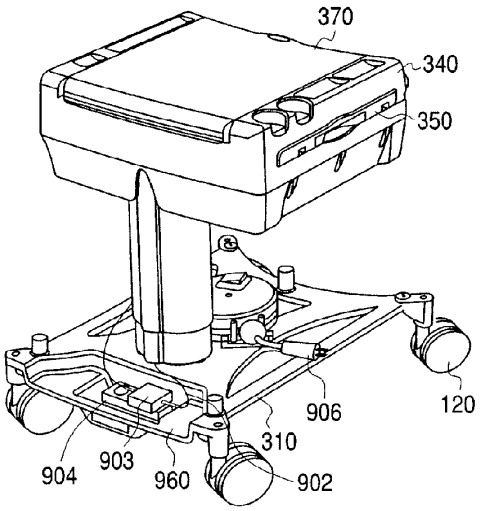

Fig. 14

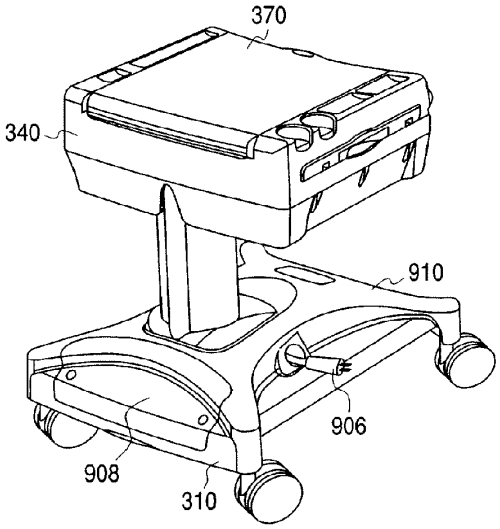

Fig. 15

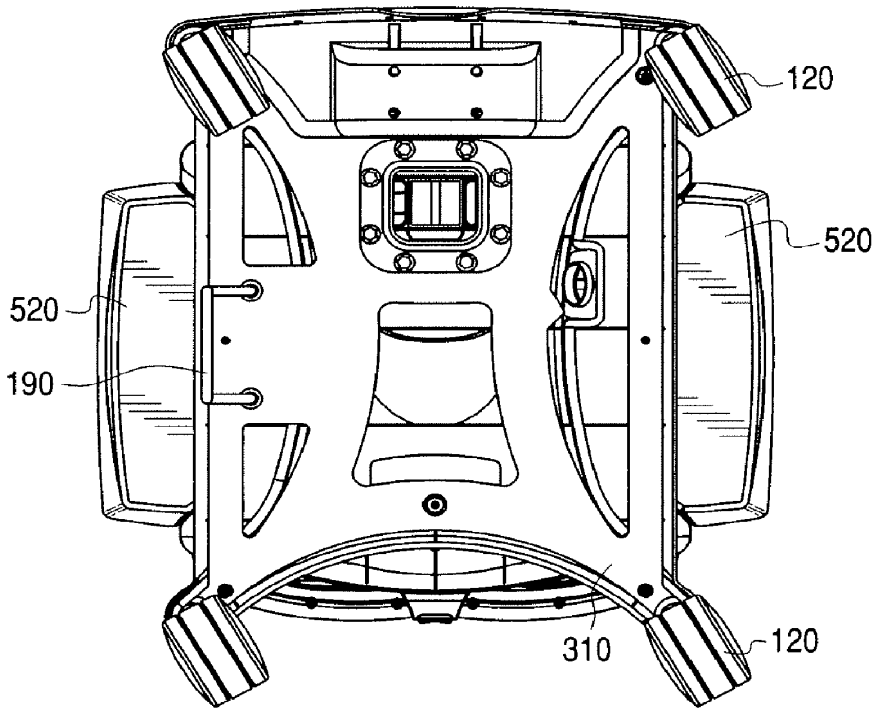

Fig. 16

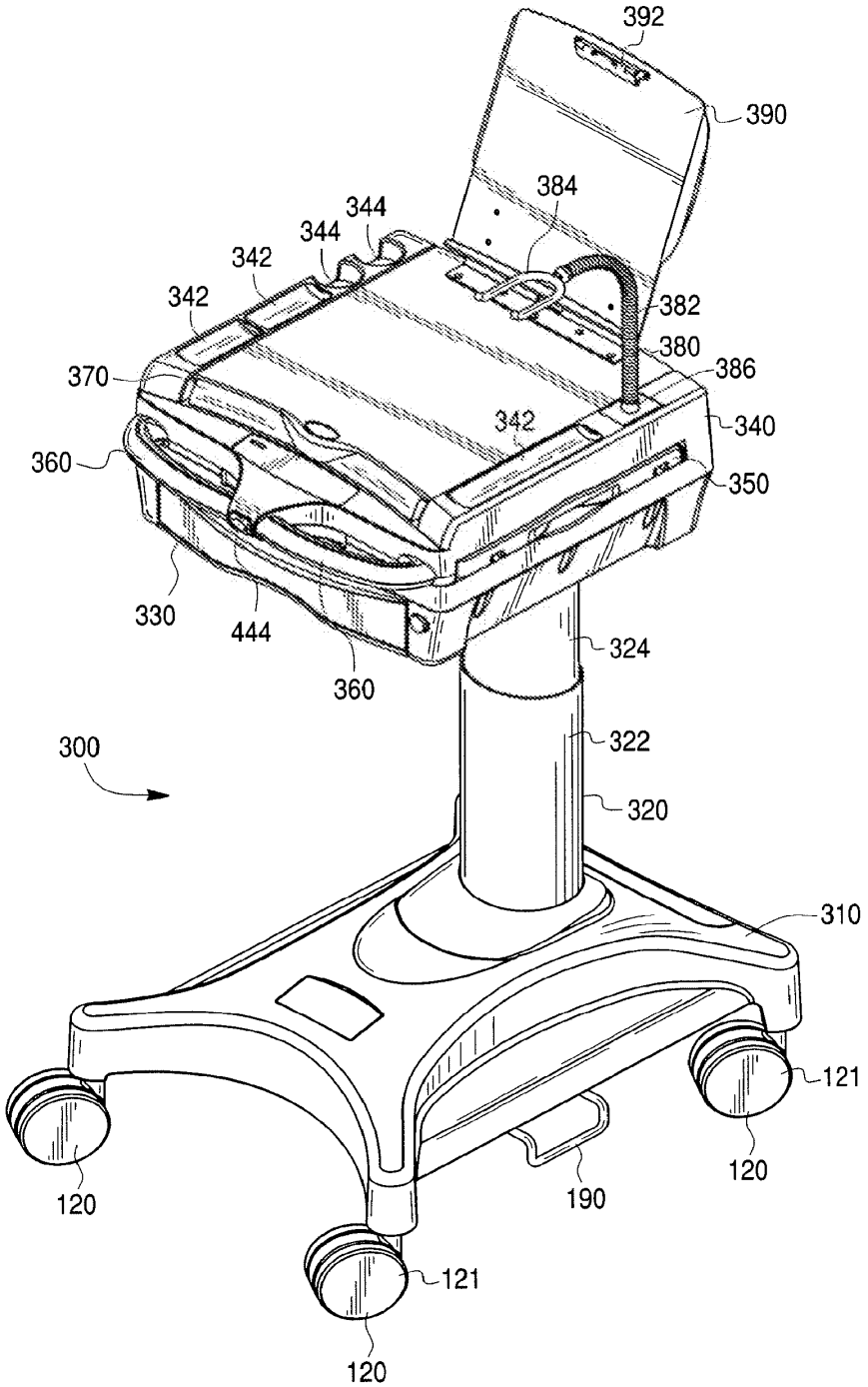
392
390
384
344
344
342
342
382
380
386
370
342
340
360
350
330
444
360
324
322
300
320
310
121
120
120
190
121
120

Fig. 17

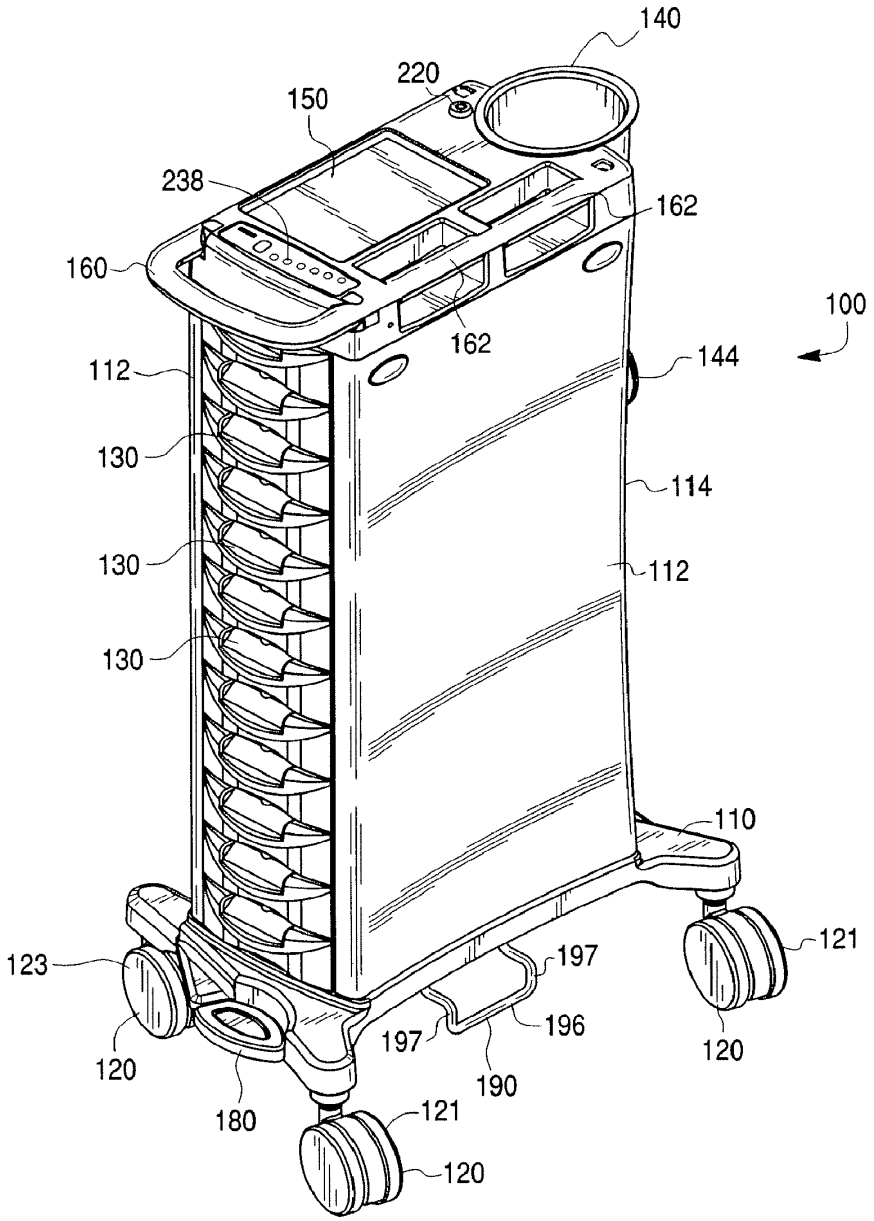
140
220
150
238
162
160
100
162
144
112
130
114
130
112
130
110
123
121
197
197
196
120
120
190
180
121
120

Fig. 1

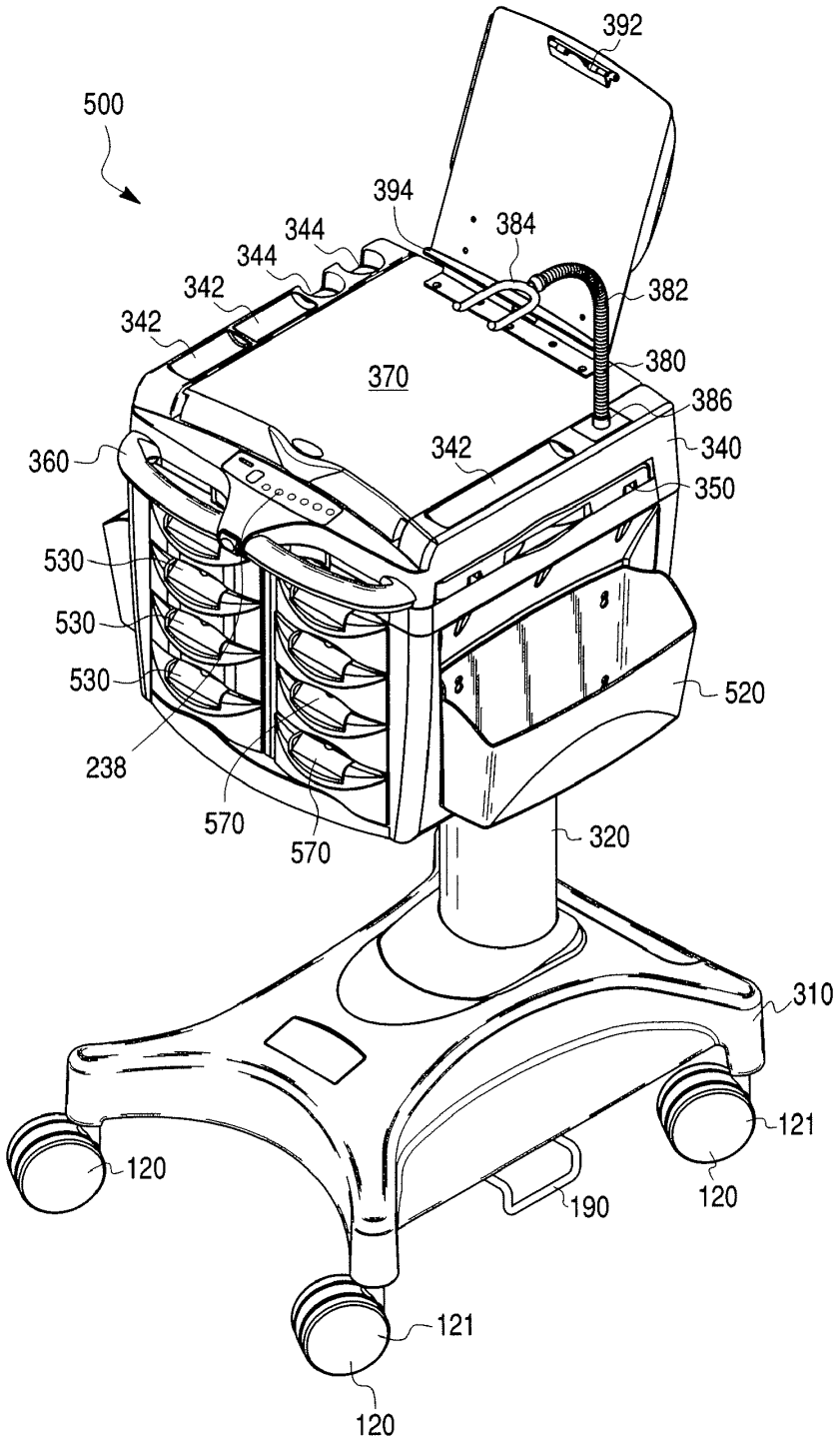
392
500
394
384
344
344
342
342
382
380
370
386
340
360
342
350
530
530
530
520
238
570
570
320
310
121
120
120
190
121
120

Fig. 18

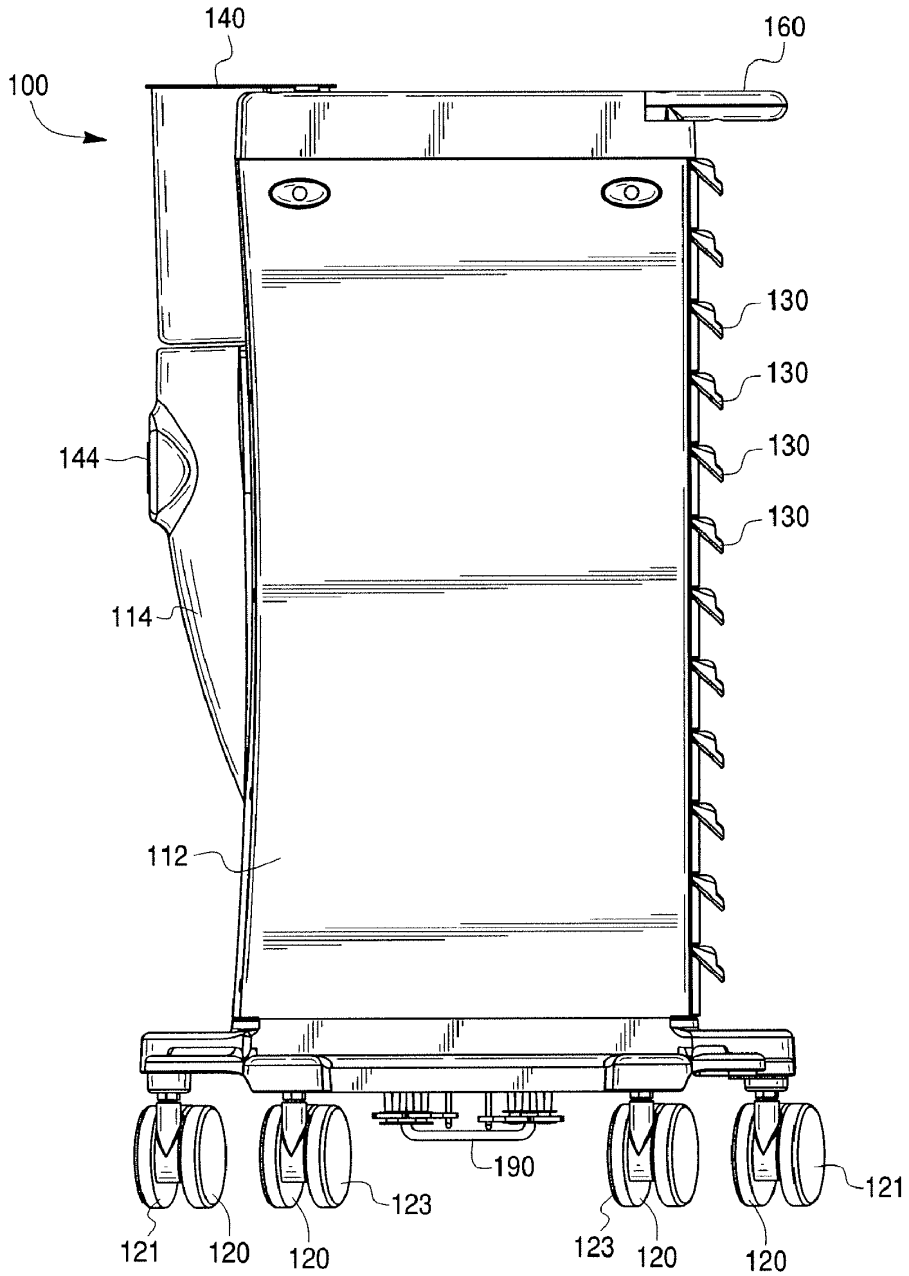
140
160
100
130
130
130
130
144
114
112
190
123
121
121
120
120
123
120
120

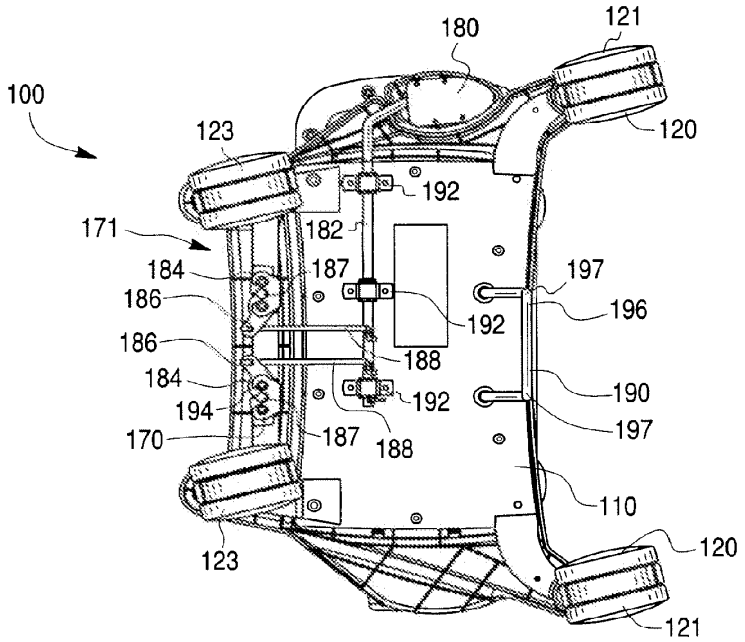
100
180
121
120
123
192
182
171
184
187
197
186
196
192
186
188
184
190
194
192
170
187
188
197
110
120
123
121

Fig. 19

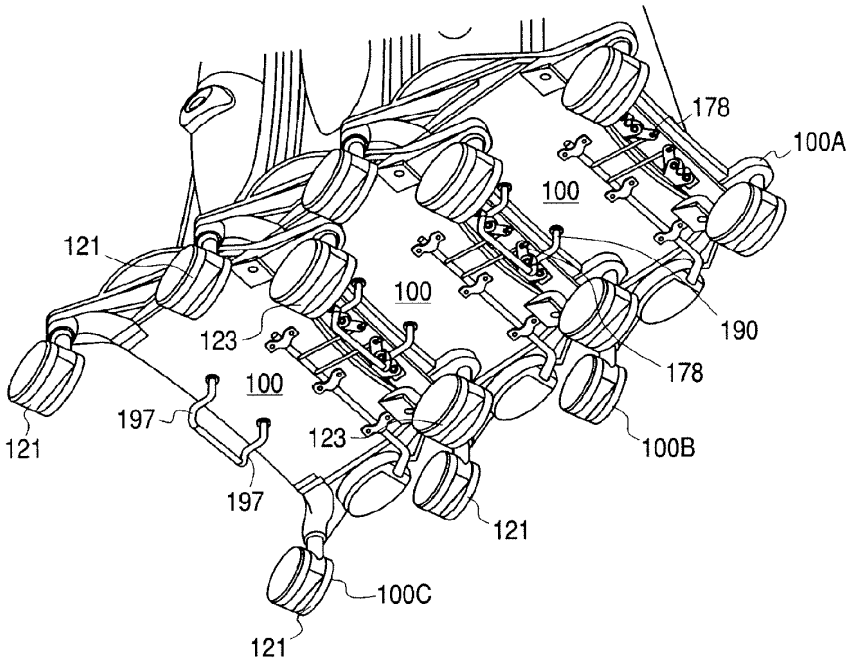
178
100A
100
121
100
190
123
178
100
197
123
100B
121
197
121
100C
121

Fig. 20

Fig. 21B

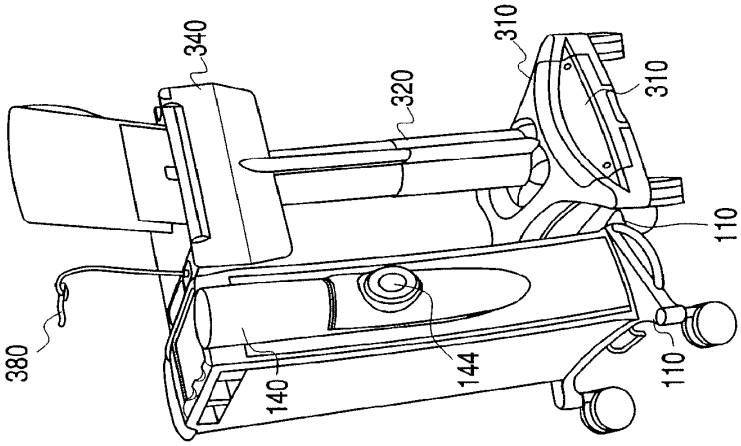

Fig. 21A

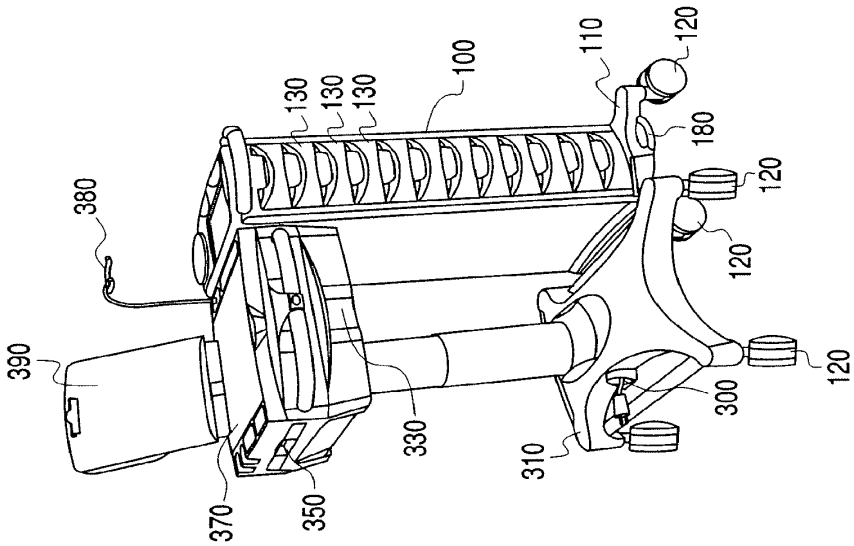

Fig. 22

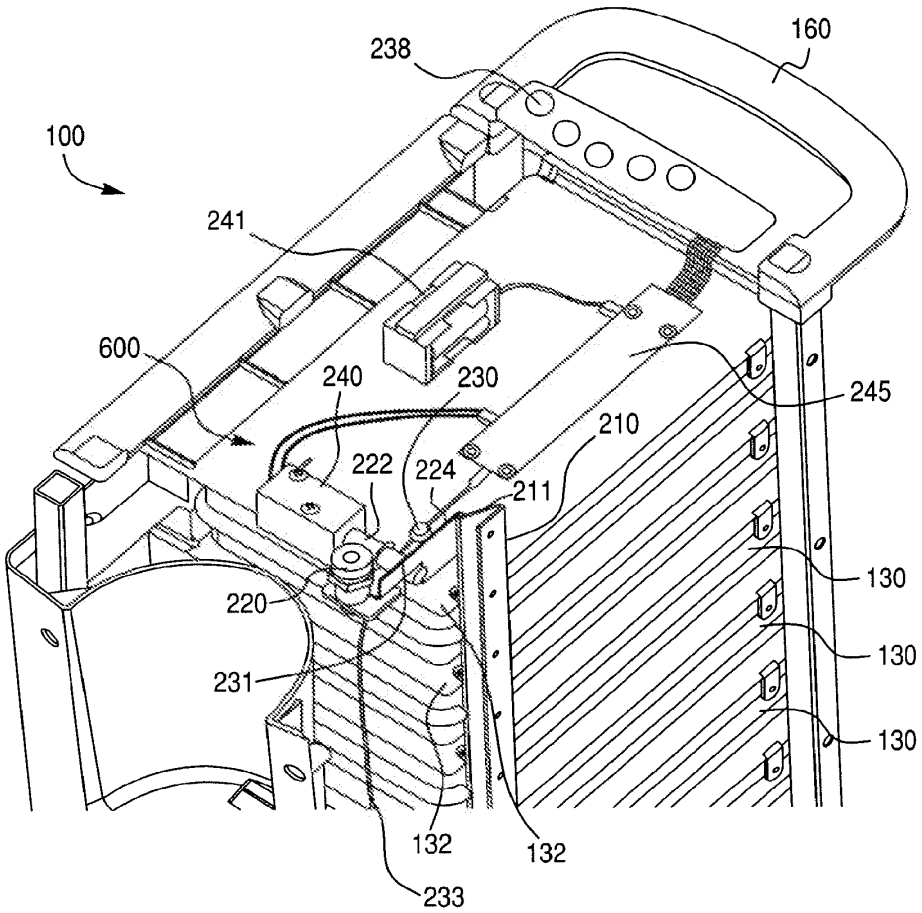
238
160
100
241
600
240
230
245
210
222
224
211
130
220
130
231
130
132
132
233

Fig. 23

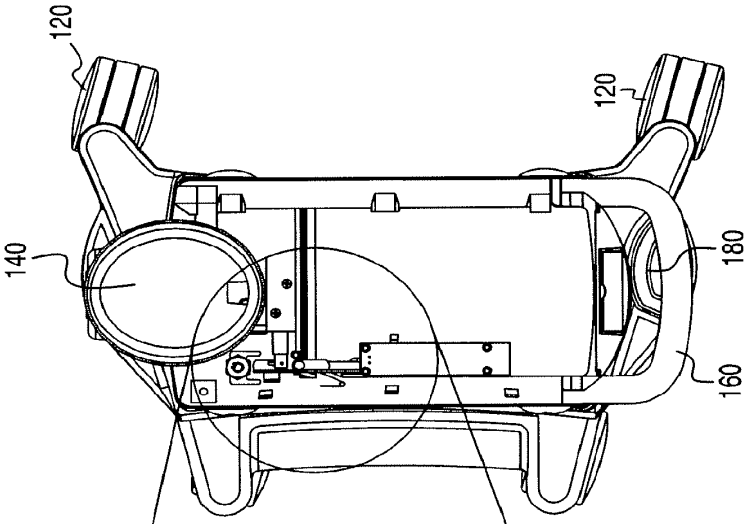

Fig. 23A

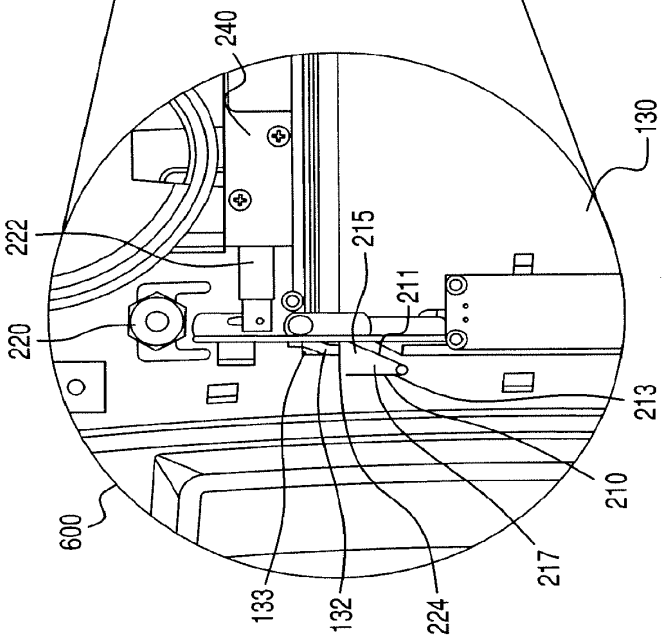

Fig. 24

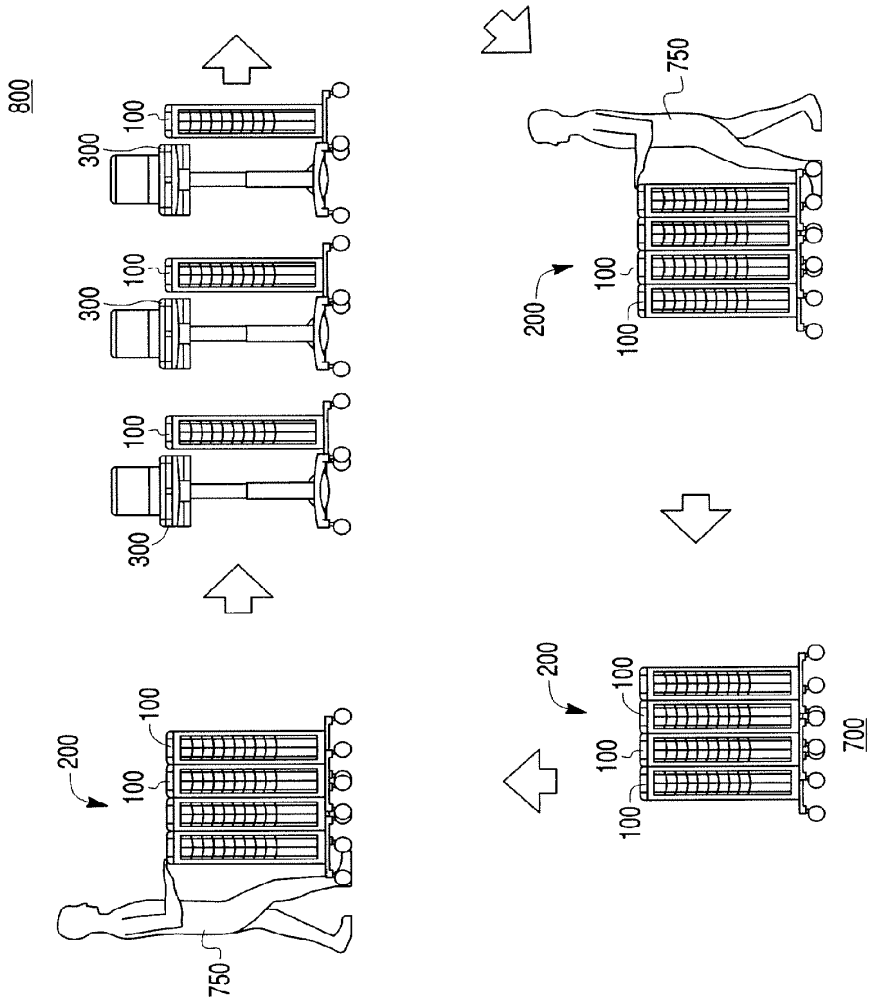
800
300
100
300
100
300
100
200
100
100
750
200
100
100
100
750
200
100
100
100
700

MEDICAL CART, MEDICATION MODULE, HEIGHT ADJUSTMENT MECHANISM, AND METHOD OF MEDICATION TRANSPORT

CROSS-REFERENCE TO RELATED APPLICATIONS

The present application is a continuation of U.S. application Ser. No. 12/550,771 (filed Aug. 31, 2009) which is a divisional of U.S. application Ser. No. 12/193,346 (filed Aug. 18, 2008) which is a continuation of U.S. application Ser. No. 10/783,030 (filed Feb. 23, 2004), and also claims priority to U.S. Provisional Application Nos. 60/448,920 (filed Feb. 24, 2003), 60/484,658 (filed Jul. 7, 2003), 60/518,649 (filed Nov. 12, 2003) and 60/532,900 (filed Dec. 30, 2003) and to U.S. Design Patent Application Nos. 29/196,712, 29/196,713, 29/196,714 (all filed Jan. 2, 2004). The foregoing applications are incorporated by reference herein in their entirety.

BACKGROUND OF THE INVENTION

The Institute of Medicine estimates that medical error is responsible for roughly 98,000 deaths annually, making it the seventh leading cause of death in the U.S. Accordingly, reducing the likelihood of error is an important issue not only for hospitals and doctors, but for society as a whole.

To alleviate some of these concerns, some hospitals provide nurses with medical carts on which a networked laptop computer facilitates the use of Electronic Medical Administration Records ("EMAR"). EMAR is an electronic record of medications and services administered by a healthcare professional through patient and medication identification via bar coding. When admitted into a hospital, the patient receives a bar coded wrist band for identification purposes. Also, healthcare professionals within the pharmacy bar code all the medications to be administered to the patients. Documentation of medications given at the point-of-care has reduced the number of errors by ensuring that the right patient is receiving the proper medication at the correct time. The EMAR software alerts the nurse if there is a discrepancy anytime during the medication administration process.

Unfortunately, however, these medical carts have proven unsatisfactory for a number of reasons. For example, the carts are not ergonomically designed. The average age of a nurse is 47 and roughly 83% of nurses report suffering chronic back pain. In addition, the existing EMAR carts suffer from a relative lack of work surface, lack of an area to dispose of refuse, bad placement of medication drawers, lack of storage space, and relative inability to be usefully raised and lowered to enable the nurse to work when either standing or sitting.

In many hospital environments, a nurse must walk to a central location (e.g., a pyxis machine) at which medication is handled to obtain medication for a particular patient. Often, to avoid giving the wrong medication to a patient, the nurse only carries one patient's medication at a time. This control, however, does not preclude the potential for the medication to be given to the wrong patient such as, for example, if the nurse is sidetracked and asks another nurse to administer the medication.

In addition to the above-mentioned concerns, when one takes into account the number of patients which a nurse must handle, the result is that the nurse must spend a considerable amount of time walking between the central location and each patient's bedside. This problem is exacerbated in some situations in which the central location is located a significant distance from one or more of the patients for which the nurse is responsible. Moreover, the cost associated with paying

nurses to continuously travel to and from various medication locations may be relatively insignificant at the level of a particular nurse but is quite significant to the medical industry as a whole.

What is needed, therefore, is an apparatus and a methodology by which medical error may be reduced and by which the amount of time a nurse spends obtaining and researching medication may be reduced, without compromising safety.

SUMMARY OF THE INVENTION

An aspect of the present invention relates to a cart including a work platform having a work surface and at least one compartment, a base, and a height adjustment mechanism for adjusting the height of the work platform relative to the base. The compartment can be a drawer. The work platform can accommodate drawers of different sizes. Preferably the compartment is configured to be unlocked via a keyless entry system.

The work platform can include a laptop platform that can be moved in at least one of a forward and a rearward direction. The work platform also can include a work surface that can be moved in at least one of a leftward and rightward direction. The work platform also can include a barcode scanner holder.

The cart can include a plurality of rolling members connected to the base. The work platform can include sidewalls and the rolling members can be disposed on the base outside of the sidewalls.

Another aspect of the present invention includes a cart system comprising a first cart and a second cart. The first cart can include at least one compartment and a base having rolling members to permit movement of the first cart. The second cart can include a plurality of compartments and a base having rolling members to permit movement of the second cart. The first and second cart can include linking structure that permits the first and second carts to be connected together for movement.

The first cart can include a work platform having a work surface and that houses the at least one compartment. The first cart can include a plurality of compartments.

Preferably the base of the first cart is configured to nest with the base of the second cart. The second cart can include a housing for supporting the plurality of compartments and the rolling members can be disposed on the base outside of the sidewalls.

Another aspect of the present invention relates to a method of medication transport. The method can include the steps of loading, at a first location, medication into first and second carts, connecting the first and second carts to form a cart train, moving the cart train to a second location when loaded with medication, separating the first and second carts after moving the cart train to the second location, moving the first cart from the second location to a third location, removing medication from the at least one cart at the third location, and returning the first and second carts to the first location.

Another aspect of the present invention relates to a method of medication transport comprising the steps of loading, at a first location, medication into a compartment(s) in a medication module(s), moving the medication module to a second location, transferring medication from the medication module to a medical cart, and administering medicine from the medical cart to a patient.

Another aspect of the present invention relates to a method of medication transport comprising the steps of loading, at a first location, medication into a compartment(s) in a medication module(s), moving the medication module to a second location, exchanging the compartments of the medication

module(s) with the compartments of a medical cart(s) at the second location, returning the medication module(s) having the compartments of the medical cart(s) therein to the first location for refilling while the medical cart(s) having the compartments of the medication module(s) therein are being taken to patients.

These and other features, aspects, and advantages of the present invention will become more apparent from the following description, appended claims, and accompanying exemplary embodiments shown in the drawings.

BRIEF DESCRIPTION OF THE DRAWINGS

FIG. **1** is a perspective view of a first embodiment of a medical cart according to the present invention;

FIGS. **2**A and **2**B are perspective views of a slidable laptop computer surface of the medical cart of FIG. **1**, the laptop surface being moveable forward (FIG. **2**A) and rearward (FIG. **2**B);

FIGS. **3**A and **3**B are top and bottom exploded perspective views of three panels of a sliding platform of the medical cart of FIG. **1**;

FIG. **3**C is an enlarged view of a connection mechanism of the sliding platform of FIGS. **3**A and **3**B

FIGS. **4**A and **4**B are top plan views of the assembled sliding platform in which the platform has been pulled out to the right (FIG. **4**A) and to the left (FIG. **4**B);

FIGS. **5**A-**5**C are close-up views of a barcode scanner and barcode scanner holder of the medical cart of FIG. **1**;

FIGS. **6**A-**6**C are perspective views of a clipboard of the medical cart of FIG. **1**;

FIG. **7** is a perspective view of a work platform of the medical cart of FIG. **1** without compartments;

FIG. **8** is a perspective view of different sized compartments configured to be inserted into the medical cart of FIG. **1**;

FIG. **9**A is an exploded view of parts of a height adjustment mechanism of the medical cart of FIG. **1**;

FIG. **9**B is a perspective view of the height adjustment mechanism of FIG. **9**A in assembled form;

FIGS. **10**A and **10**B are bottom and top perspective views of the height adjustment mechanism of FIGS. **9**A and **9**B being connected to the medical cart of FIG. **1**;

FIG. **11** is a rear perspective view of the medical cart of FIG. **1** having a laptop computer thereon and showing a hatch being removed;

FIG. **12** is cross-sectional side view of the medical cart of FIG. **1**;

FIG. **13** is a rear perspective view of the medical cart of FIG. **1** having both a hatch and a base cover removed;

FIG. **14** is a rear perspective view of the medical cart of FIG. **1** showing a retractable power cord;

FIG. **15** is an underside plan view of the medical cart of FIG. **1** showing a first locking mechanism;

FIG. **16** is a perspective view of a second embodiment of a medical cart according to the present invention;

FIG. **17** is a perspective view of a first embodiment of a medication module according to the present invention;

FIG. **18** is a side plan view of the medication module of FIG. **17**;

FIG. **19** is an underside plan view of the medication module of FIG. **17** showing first and second locking mechanisms;

FIG. **20** is an underside perspective view of a plurality of medication modules of the type shown in FIG. **17** releaseably engaged to form a train;

FIGS. **21**A and **21**B are front and back perspective views of a medical cart of the type shown in FIG. **16** releaseably engaged with a medication module of the type shown in FIG. **17**;

FIG. **22** is a breakaway perspective view of the medication module of FIG. **17** showing a portion of a keyless entry system;

FIGS. **23** and **23**A show a cross-sectional top view of the medication module of FIG. **17** showing a portion of a keyless entry system, and an enlarged view of a portion thereof, respectively; and

FIG. **24** is a diagram of steps for an embodiment of a method of medication transport according to the present invention, which can be performed using a plurality of medication modules of the type shown in FIG. **17** and a plurality of medical carts of the types shown in FIGS. **1** and **16**.

DETAILED DESCRIPTION

Presently preferred embodiments of the invention are illustrated in the drawings. An effort has been made to use the same or like reference numbers throughout the drawings to refer to the same or like parts.

A first embodiment of a medical cart **500** is shown in FIGS. **1**-**15**. With respect to FIG. **1**, it can be seen that the medical cart **500** includes a work platform **340**, a support mechanism **320** that supports and adjusts the height of the work platform **340**, and a base **310**.

The work platform **340** can include a bi-directional laptop platform **370**, a bi-directional work surface **350**, an adjustable barcode scanner holder **380**, an adjustable clipboard **390**, one or more lockable compartments **530**, a plurality of top bins **342**, removable side bins **520**, cup holders **344**, and/or a keypad **238**. Because each of these items is provided on the work platform **340**, a user can ergonomically access each of these items as the work platform **340** is raised or lowered.

The laptop platform **370** can be configured to support, for example, a laptop computer **900** (shown in FIGS. **6**A and **7**). Conventional structure can be provided on the laptop platform **370** to hold the laptop computer in place. The laptop platform **370** can have an arcuate front face **376** at a front portion. The arcuate front face **376** may be designed to correspond to the torso of a user for ergonomic reasons.

The laptop platform **370** can be locked in a central position (FIG. **1**) or adjusted ergonomically to a forward (FIG. **2**A) or rearward (FIG. **2**B) position. As an example of a use of the present invention, when a user lowers the work platform **340** to a low position and moves the laptop platform **370** to a forward position, the user can sit and the work platform **340** functions as a desk. A transfer structure **800** allows the laptop platform **370** to be moved between those positions. The transfer structure **800** can include stationary rails **372** mounted on body portions **802** of the work platform **340** and rails runners **373** mounted on the laptop platform **370**, as shown in FIGS. **2**A and **2**B.

Notches **374**, which include sloped surfaces **375** and cavities **377**, are formed along the rail runners **373**. The notches **374** are configured to engage posts **371** formed along the stationary rails **372**. When the laptop platform **370** is moved by the transfer structure **800**, the sloped surfaces **375** of the notches **374** are configured to engage the posts **371**. By continuing to push (or pull) the laptop platform **370**, the posts **371** will ride up the sloped surfaces **375** and be deposited in cavities **377** in the notches **374**, thereby releasably immobilizing the laptop platform **370** with respect to the work platform **340**.

In one embodiment, one notch **374** may be provided on each of the rail runners **373** and corresponding posts **371** may be provided on the stationary rails **372**. As a result, the laptop platform **370** can be releaseably locked with respect to the work platform **340**. For example, as shown in FIGS. **2**A and **2**B, the posts **371** may be provided at rear portions of the stationary rails **372** and the notches **374** may be similarly provided at rear portions of the rail runners **373**. As a result, the laptop platform **370** will be releaseably locked with respect to the work platform **340** when in a central position shown in FIG. **1**.

In another embodiment, each of the stationary rails **372** may include at least three posts **371**, one provided at each end of the stationary rails **372** and one provided in a central portion of the stationary rails **372**. Correspondingly, each of the rail runners **373** may include three notches **374**, one provided at each end of the rails runners **373** and one provided in a central portion of the rail runners **373**. As a result, the surface **370** can be releasably immobilized with respect to the work platform **340** in a forward position (FIG. **2**A), a rearward position (FIG. **2**B), and a central position (FIG. **1**). In the forward position (FIG. **2**A), the rearmost notches **374** may be engaged with the forwardmost posts **371**. Similarly, in the rearward position (FIG. **2**B), the forwardmost notches **374** may be engaged with the rearmost posts **371**. Finally, in the central position, all three posts **371** on each stationary rail **372** may be engaged with the corresponding cavity **377** of the notches **374** of the rail runners **373**.

In another embodiment, the contact between the stationary rails **372** and the rail runners **373** can be frictionally enhanced such that the laptop platform **370** does not readily slide with respect to the work platform **340**. Rather, force (i.e., either pushing or pulling on the laptop platform **370**) will be required to overcome the frictional engagement between the stationary rails **372** and the rail runners **373**. As a result, the laptop platform **370** can be relatively fixed with respect to the work platform **340** at any location between a forwardmost position (FIG. **2**A) and a rearmost position (FIG. **2**B). In addition, one or more notches **374**/posts **371** may be combined with the frictional engagement between the stationary rails **372** and the rail runners **373**.

When the laptop platform **370** is pushed forward or rearward, it can expose a secondary work area **379** provided below the laptop platform **370**. The secondary work area **379** can be particularly sturdy. For example, it can be sturdy enough to enable a user to crush pills on the secondary work area **379**. In addition, the secondary work area **379** may be provided with a rim **378**. The rim **378** may reduce the likelihood of medication rolling off the medical cart **500** such as, for example, when a nurse tries to crush pills on the secondary work area **379**.

The bi-directional work surface **350** is shown in FIGS. **3**A, **3**B, **3**C, **4**A, and **4**B. As shown in FIGS. **3**A and **3**B, the bi-directional work surface **350** is positioned below the laptop platform **370**. The bi-directional work surface **350** is designed to move through a slot **343** in the side **341** of the work platform **340** in leftward and rightward directions to provide additional work space.

The work surface **350** can have channels **355**, **357** on its underside that engage ribs **358**, **359** formed on a plate **361** provided on a body **329** of the work platform **340**. The channels **355**, **357** are sized to receive the ribs **358**, **359** of the plate **361**. To prevent the bi-directional work surface **350** from sliding off the plate **361**, the channels **355**, **357** are closed at one end. As a result, when the second bi-directional work surface **350** slides to the right (as shown in FIG. **4**A), the channels **355** will slide along the ribs **358**, **359**. At one point, the channels **355** will slide past the ribs **359** on the left side of the plate **361** and will continue to slide along ribs **358** on the right side of the plate **361**. The second bi-directional work surface **350** will stop sliding, however, when the closed ends **363** of the channels **355** abut the inner ends of ribs **358**.

Similarly, when the second bi-directional work surface **350** slides to the left (as shown in FIG. **4**B), the channels **357** will slide along the ribs **358**, **359**. At one point, the channels **357** will slide past the ribs **358** on the right side of the plate **361** and will continue to slide along ribs **359** on the left side of the plate **361**. The second bi-directional work surface **350** will stop sliding, however, when the closed ends **365** of the channels **357** abut the inner ends of the ribs **359**.

When the bi-directional work surface **350** slides to the right or to the left, it slides in an arcuate path as a result of the channels **355**, **357** and ribs **358**, **369** (and the work surface **350**) being arcuate in shape. As a result, the second bi-directional work surface **350** is positioned closer to a user standing or sitting in front of the medical cart **500** when it is in an extended position.

A releaseable locking mechanism **1000** (shown best in FIG. **3**C) can be provided to hold the work surface **350** in a center position and to prevent it from sliding unintentionally. For example, as shown in FIGS. **3**B and **3**C, the second bi-directional work surface **350** may be provided with a projection **354** having sloped surfaces **347** and a nesting region **346**. Correspondingly, the plate **361** may be provided with a moveable pin **356** which may be, for example, a ball spring plunger that is spring-biased in upward direction (i.e., toward the work surface **350**). As a result, when the bi-directional work surface **350** is pushed into the work platform **340** (from either the left or the right), the moveable pin **356** will initially be pushed downward relative to the plate **361** by the sloped surface **347** of the projection **354**. Subsequently, the pin **356** will extend upwards into the nesting region **346** of the projection **354** and become frictionally engaged therein, thereby releasably locking the work surface **350** with respect to the work platform **340**. To move the work surface **350** out of the locked position, a force is applied to one of the exposed ends of the second bi-directional work surface **350** (to push the moveable pin **356** out of the nesting region **346** of the curved projection **354**), thereby enabling the bi-directional work surface **350** to slide freely along the ribs **358**, **359**.

Of course, the type of locking mechanism may be changed. Further, additional movable pins **356** may be provided in the plate **361** so as to enable the second bi-directional work surface **350** to be releasably locked in a corresponding number of positions.

As shown in FIGS. **5**A-**5**C, the adjustable barcode scanner holder **380** includes a flexible neck **382**, a base **386**, and a holder portion **384**. As a result of the neck **382** being flexible, the position of the holder portion **384** can be adjusted. For example, the vertical distance between the holder portion **384** and the laptop platform **370** can be adjusted. Specifically, the orientation of the holder portion **384** can be adjusted between, for example, a holding position in which a barcode scanner **385** is maintained in an upright holding position (FIG. **5**B) and a hands-free scanning position in which the holder portion **384** is adapted to hold an inverted (i.e., facing downward) barcode scanner **385**. By holding the scanner **385** in the inverted position, the holder portion **384** enables a user to pass documents between the scanner **385** and the laptop platform **370** (FIG. **5**C), without having to manually hold the scanner **385** (i.e., the scanner **385** may be operated in a hands-free manner). Moreover, the flexibility of the neck **382** enables the holder portion **384** to be adjusted to accommodate various barcode scanner sizes. In addition, the neck **382** is designed to

rotate at the base **386** thereof so that a user can turn the barcode scanner holder **380** away from the laptop platform **370**, if desired.

The barcode scanner **385** may be an integral part of the medical cart **500** or may be detachable therefrom. If the barcode scanner **385** is an integral component of the medical cart **500**, its power cord **387** may be inserted into a power cord passage **327** and connected to an electrical receptacle **904**, as later explained in detail with respect to FIGS. **11-13**. By way of contrast, the barcode scanner **385** may receive the power necessary to operate it from a laptop computer **900** when it is plugged into a USB port of the laptop computer **900**.

As shown in FIGS. **6**A-**6**C, the adjustable clipboard **390** is also designed to hold items in a hands-free manner. The clipboard **390** includes a clip **392** for holding items, such as paper. The clipboard **390** also includes conventional rails **394** attached to an L-shaped metal bracket **393** which connects the clipboard **390** to the laptop platform **370**, as shown best in FIG. **6**C. The clipboard **390** is designed to slide along the rails **394** to the left of the medical cart **500**. As a result, if a user is working on a laptop computer provided on the laptop platform **370**, the clipboard **390** can be moved from a central position (FIG. **6**B) to left of the laptop computer to allow the user to view the documents clipped to the clip **392**, as shown in FIGS. **6**A and **6**C. Of course, in other embodiments, the clipboard **390** could be designed to move to the right.

The plurality of compartments **530** face the user and move up and down with the work platform **340** (i.e., they remain in the same position relative to the laptop platform **370**), which are ergonomically desirable features. The compartments **530** may be provided with labeling portions **570**, which allow labels to be displayed on the compartments **530**. The plurality of compartments **530** enable a user (e.g., a nurse) to separately maintain medication for particular patients or for a particular room. For example, if a nurse is responsible for eight patients in a hospital ward, the medical cart **500** may be provided with a corresponding number of compartments **530** and the medication for each patient may be kept in a separate drawer assigned to that patient. As a result, the nurse could load the medication for all eight patients into eight separate drawers at one time (e.g., at the start of a medication pass) and at one location (e.g., at a pyxis machine), thereby reducing the need to travel to obtain the medication during the nurse's shift.

As shown in FIGS. **7** and **8**, the compartments **530** have projections **531** which are configured to slide in grooves **533** formed on the interior walls of the medical cart **500**. Although the compartments **530** in FIG. **1** are shown as having a generally uniform height, this is not required. In some embodiments the compartments **530** may have different heights.

For example, as shown in FIG. **7**, four short compartments **530**A-D can be removed, thereby exposing dividers **535** (which may be, for example, sheet metal). By removing the dividers **535** (e.g., by sliding them out of the medical cart **500**), as shown in the left side of the medical cart **500** in FIG. **7**, a tall space **537** may be created. As a result, a tall compartment **530**E, the height of which is substantially equal to height of the four short compartments **530**A-D when installed in the medical cart **500**, may be inserted into medication module **500** to substantially fill the space **537**. Moreover, the tall compartment **530**E will readily slide into the medical cart **500** by means of the projections **531** which are configured to slide into the grooves **533** previously occupied by the projections **531** of the upper short compartment **530**A. Thus, different size compartments **530** can be accommodated based on the desired application.

The compartments **530** may be lockable by means of a keyless entry system (the details of which are later described with respect to FIGS. **22** and **23**). Thus, the potential for unauthorized access to the compartments **530** while the nurse is caring for a particular patient is small.

The top bins **243** are provided to house items such as paperclips, pencils, etc. Similarly, the cup holders **344** are provided to secure a number of medicine cups used to pass out medications.

The removable side bins **520** can be provided to hold items, such as trash or medical equipment. The side bins **520** can be removably connected to the sides of the body **329** of the work platform **340** by conventional means, such as a hole and pin arrangement.

The work platform **340** may be raised and lowered by means of the support mechanism **320**. This provides a sitting or standing user with easy access to the work surface **350** and its associated components (e.g., laptop platform **370**, work surface **350**, compartments **530**, etc.). The support mechanism **320** allows the user to adjust the position of the work platform **340** to a comfortable position, regardless of whether the user is sitting or standing. The support mechanism **320** comprises two telescoping portions **322**, **324** (shown more clearly in the embodiment shown in FIG. **16**) and height adjustment mechanism **400** (shown in FIGS. **9**A and **9**B). The height adjustment mechanism **400** enables a standing user or a sitting user to ergonomically raise and lower the work platform **340**.

The height adjustment mechanism **400** includes an outer casing **410**, a telescoping inner casing **420**, and a driver **430**. Preferably, two or more drawer slides **422** are provided between the inner casing **420** and the outer casing **410**. Although two drawer slides **422** may be used (on opposite sides of the inner casing **420**), it is preferable to use at least three drawer slides **422**, to prevent (or at least greatly inhibit) a binding action from being applied to the height adjustment mechanism **400** by means of a cantilevered force being applied thereto.

The drawer slides **422** may be, for example, conventional drawer rails formed of stationary drawer rails **423** and corresponding rail runners **425**. If the drawer slides **422** are conventional drawer rails, one side of the drawer slides **422** (e.g., the rail runners **425**) may be fixed to outer sides of the inner casing **420** and the corresponding side of the drawer slides **422** (e.g., the stationary drawer rails **423**) may be fixed to inner sides the outer casing **420**. Further, the stationary drawer rails **423** may be provided with ball bearings to facilitate movement of the rail runner **425**. An upper end of one side of the inner casing **420** is provided with an engagement mechanism **426**. As shown, the engagement mechanism may be in the form of a window in the side of the casing **420**.

The driver **430** includes a gas driven piston **432** which, in turn, includes a body portion **436** and a telescoping strut **434**. The driver **430** is controlled by an actuator **440** to which is connected by a connector **442**.

As shown in FIG. **10**A, a base **411** of the outer casing **410** is affixed to the base **310** of the medical cart **500** by a plurality of bolts through the base **411**. A bolt **413** passes through a hole **437** in a connection portion **439** of the body portion **436** of the piston **432**, thereby immobilizing both the outer casing **410** and the piston **432**. In addition, as shown in FIG. **10**B, the inner casing **420** and the telescoping strut **434** are affixed to work platform **340** by an upper bolt **415** which passes through the inner casing **420** and through a hole **459** in a connection portion **460** of the telescoping strut **434**. As a result, when the work platform **340** is raised or lowered, the strut **434** and the inner casing **420** are correspondingly raised or lowered.

Fig. 2A

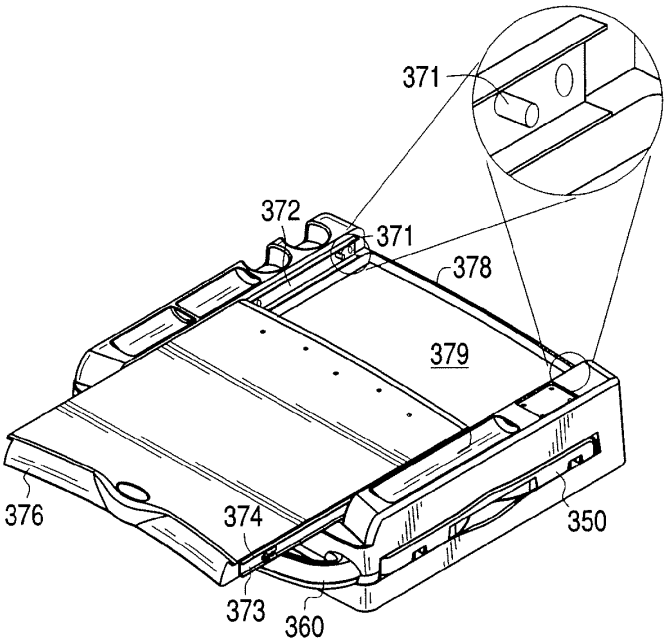
371
372
371
378
379
376
374
350
373
360

Fig. 2B

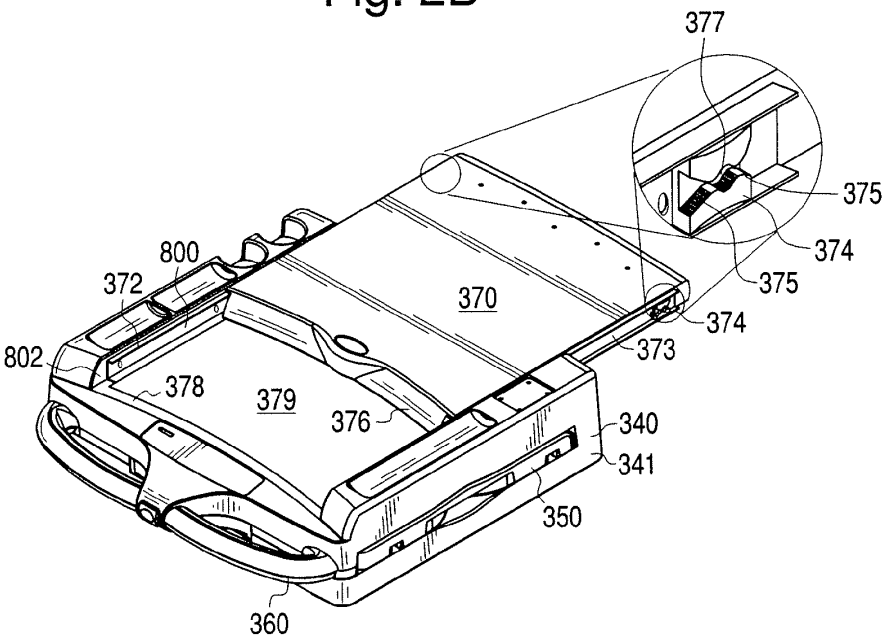
377
375
374
375
800
372
370
374
373
802
378
379
376
340
341
350
360

As shown in FIG. **10**B, the actuator **440** may be provided in a front portion of the medical cart **500**. Moreover, a button **444** of the actuator **440** may be provided in the handle **360** of the medical cart **500**, as shown in FIG. **1**. To lower the work platform **340**, the button **444** is pushed as a user pushes down on work platform **340** thereby causing the gas driven piston **432** to expel air. As a result, the telescoping strut **434** is withdrawn vertically into the body portion **436** of the piston **432**. As the telescoping strut **434** moves downward into the body portion **436**, the work platform **340** which is affixed to the telescoping strut **434** also moves downward. In turn, the work platform **340** forces the connection portion **460** and the inner casing **420** to move downward. If the button **444** is released while the work platform **340** is being lowered, the work platform **340** will be releaseably locked at the height at which the button **444** is released. As a result, the work platform **340** can be releaseably locked at any position between a lowest position (at which the telescoping strut **434** is maximally provided in the body portion **436** of the piston **432**) and a highest position (at which the inner casing **420** is driven upward to a maximum distance by the telescoping strut **434** of the piston **432**).

By way of contrast, to raise the work platform **340**, a user merely needs to push button **444** and lift upward on the work platform **340**. As the work platform **340** is light in weight, it will readily move upward. Moreover, in the process, the gas driven piston **432** will intake air, thereby enabling the work platform **340** to remain at the raised level, i.e., when the platform **340** is raised gas will be sucked into the piston **340** and will not be readily expellable until the button **444** is depressed. In other words, similar to the process of lowering the work platform **340**, when the work platform **340** is raised it may be releaseably locked at any position between the lowest position and the height position by releasing the button **444**. As a result, each component of the work platform **340** (including the bi-directional laptop platform **370** and the compartments **530**) is ergonomically available to a user when sitting or standing.

In addition, as shown in FIGS. **12** and **13**, the medical cart can include a power cord passage **327** that enables a power cord **902** of a laptop computer **900** (or other device) on the laptop platform **370** to be electrically connected to an electrical receptacle **904** provided in the base **310**. The electrical receptacle **904** can be connected, for example to a wall outlet via a retractable cord **906**, as later described. Preferably, the passage **327** includes an access hole **325** in the work platform **340** and extends through the telescoping portions **322**, **324**. The passage **327** terminates in a well **960** in the base **310** where the electrical connection can occur. This permits the point of connection to the electrical receptacle **904** to be enclosed.

As shown in FIG. **13**, the well **960** in the base **310** houses the electrical receptacle **904**, a retractable cord **906**, and a hatch **908** that provides access to the well **960** so that power cords **387**, **902** can be plugged into the electrical receptacle **904**. The retractable cord **906** can be plugged into an external wall outlet to recharge the battery internal to the laptop computer **900** and/or a battery-powered solenoid **240** in the keyless entry system (later described in detail). The hatch **908** works in conjunction with a cover plate **910** to enclose the base **310** including the well **960**, thereby encapsulating the components provided in the base **310** and shielding them from the environment.

The base **310**, which is moveable by means of rolling members **120** (e.g., casters), is ergonomically shaped to provide stability. The base **310** is designed to provide stability by having the rolling members **120** at corners which are outside of the footprint of the work platform **340**. Moreover, the rolling members **120** are spaced-apart to such a degree that two rolling members **123** of a medication module **100** can be located between two rolling members **121** of the base **310**, thereby enabling the medical cart **500** and the medication module **100** to nest together. Further, when the medical cart **500** is nested with a medication module **100**, it may be releaseably connected to the medication module **100** by means of a second locking mechanism **190** provided on an underside of the base **310** (shown in FIGS. **1** and **15**), also as later described in detail.

Another embodiment of a medical cart **300** is shown in FIG. **16**. In this embodiment, the removable side bins **520** of the previous cart **500** have been removed to facilitate joining the medical cart **300** with a medication module **100**. The medical cart **300**, like the medical cart **500** shown in FIG. **1**, also includes a second locking mechanism **190** which may be used to connect the medical cart **300** to a medication module **100**. In addition, the cart **300** contains fewer compartments **330** which may, like the compartments **530** of the medical cart **500** shown in FIG. **1**, be lockable by means of a keyless entry system or by a conventional key lock.

One embodiment of a medication module **100**, which may be referred to as a cart, is shown in FIGS. **17-23**. As shown in FIG. **17**, the medication module **100** includes a component body **111** having a plurality of lockable compartments **130** and which is supported by a base **110**. The medication module also may include a refuse container **140**, a depression work surface **150**, a retractable power cord **144** (shown best in FIGS. **18** and **21**B) which can be used to recharge a battery **241** of a keyless entry system **600** by means of a power cord **233** (as later described in detail), a front handle **160**, and a side handle **162**. The two handles **160**, **162** are provided so that the medication module can be pushed by a user standing in front of the compartments **130** or in front of the sidewall **112**.

The component body **111** includes two side walls **112** and a back wall **114**. The walls **112**, **114** support a plurality of compartments **130** which, for example, may be in the form of drawers. Although the compartments **130** are shown as having a generally uniform height, this is not required. Moreover, in some embodiments the compartments **130** may have different heights. As a result, a plurality of short compartments **130** may be replaced by a tall compartment **130** in the manner previously described with respect to the first medical cart **500** embodiment.

It is preferable to provide the user with the ability to lock the compartments **130**, of the medication module **100**. To reduce the likelihood of losing a key, to reduce the likelihood of having a key getting stuck (or worse broken) in a lock, and to eliminate the need for a separate lock for each compartment **130**, the compartments may be lockable by a keyless entry system **600**, as hereafter described with respect to FIGS. **22**, **23**, and **23**A.

The keyless entry system **600** includes a solenoid **240** (powered by a battery **241** which is electrically connected, by means of the power cord **233**, to the retractable power cord **144**), a printed circuit board ("PCB") **245**, a piston **222**, a spring-biased hinge **210** (which has an active side **211** and a stationary side **213**), a keypad **238**, and an actuating lever **224** which is connected to the piston **222** at a connection point **231** and which pivots around an axis of rotation defined by a pin **230**.

The hinge **210** can be, for example, a hinge conventionally known as a piano hinge. In a locked orientation, the active side **211** of the hinge **210** is provided in an engagement position **215** in which the active side **211** is positioned to engage a notch **132** formed on a compartment **130** (i.e., each

compartment **130** has a similar notch **132**), if a user attempts to withdraw the compartment **130**. In other words, as a result of the engagement between the active side **211** of the spring **210** and the notches **132** of the compartments **130**, the compartments **130** can not be readily withdrawn out of the medication module **100**.

To unlock the compartments **130**, a user first enters a security code using buttons of the keypad **238** (to verify access to the medication module **100**) and may, if required, then enter an unlock code on the keypad **238**. In response, the PCB **245** sends an unlock signal to the solenoid **240**. When the unlock signal is received by the PCB **245**, the solenoid **240** withdraws the piston **222**, thereby causing the end of actuating lever **224** in contact with the active side **211** of the spring **210** to swing outward on the pin **230**. As a result, the actuating lever **224** causes the active side **211** of the spring **210** to swing out of the engagement position **215** and into a disengagement position **217**. In other words, the active side **211** swings toward the stationary side **213** of the spring **210** so that the two sides **211**, **213** rest against each other. When the sides **211**, **213** of the spring **210** rest against each other, the notches **132** of the compartments **130** will no longer be inhibited by the active side **211** of the spring **210**. As a result, the compartments **130** may be readily removed from the medication module **100**.

The compartments **130** can be relocked by pressing a "lock" button (not labeled) on the keypad **238** or by entering a lock code on the keypad **238**; in either case, the PCB **245** will send a lock signal to the solenoid **240** instructing it to outwardly push the piston **222**, thereby causing the end of the actuating lever **224** in contact with the active side **211** of the spring **210** to swing inward on the pin **230**. As a result, the active side **211** of the spring **210** will swing back into the engagement position **215** by means of the spring-biased nature of the spring **210**. In addition, and as a safety means, a timer may be provided in the keypad **238**, PCB **245**, or in the solenoid **240** which will, when a timer count is satisfied, automatically instruct the piston **222** to be outwardly pushed, thereby causing the active side **211** of the spring **210** to retract into the engagement position **215**.

If a compartment **130** is removed when either a lock signal is sent to the solenoid **240** or when a timer count is satisfied (and the active side **211** of the spring **210** is provided in the engagement position **215**), the compartment **130** may be inserted into the medication module without entering an unlock code. Specifically, the notches **132** of the compartments **130** have sloped faces **133** thereon which, when the compartment **130** is pushed into the medication module **100**, will abut the active side **211** of the spring **210**. By continuing to push the compartment **130**, the sloped face **133** will cause the active side **211** of the spring **210** to collapse into the disengagement position **217**, i.e., the spring-bias of the spring **210** will be overcome. After the sloped face **133** passes the active side of the spring **210**, the active side **211** will snap back into the engagement position **215** (by means of the spring-bias), thereby locking the compartment **130** in the medication module **100**.

An additional safety (and access) measure may be provided to address a situation in which the keypad **238** fails or the battery powered solenoid **240** loses power. Specifically, the compartments **130** may be unlocked manually by a hard (back-up) lock **220**, as shown in FIGS. **17** and **23**. By means of the hard lock **220**, a key can be used to manually rotate the actuating lever **224**, thereby pushing the active side **211** of the spring **210** or enabling it to swing outward under the force of the spring bias. In other words, the key can be used to move the active side **211** manually out of the engagement position **215** or to allow the active side **211** to swing (under the spring-biased force) into the engagement position **215**.

Although the keyless entry system **600** has been described with respect to the medication module **100**, the same system **600** can be applied to the compartments **330**, **530** of the medical carts **300**, **500**, respectively.

As a result of the ability to lock the compartments **130**, **330**, **530**, a nurse can use a medication module **100** and/or medical cart **300**, **500** to deliver medication to various patients, without worrying about unauthorized access to the compartments **130**, **330**, **530** while attending to a particular patient. Moreover, as a result of the keypad **238**, a nurse does not have to worry about losing a key, except for the hard lock key which may be kept at a central location.

The base **110**, which is supported by a plurality of rolling members **120** (e.g., casters), is designed to provide stability to the frame **111**, similar to the base **310** of the medical cart **300**, **500**. However, the base **110** is also designed such that the two of the rolling members **121** on one side of the module **100** are spaced apart farther than the two rolling members **123** on the other side of the module **100**. As a result, when two medication modules **100** (or a medication module **100** and a medical cart **300**, **500**) are brought together, the closer spaced rolling members **123** of one module **100** can fit between the farther spaced rolling members **121** of the other module **100** (or medical cart **300**, **500**), thereby enabling the modules **100** (or module **100** and medical cart **300**, **500**) to nest closer together to form a train **200**.

As a result of the ability to nest the bases **110** of a plurality of consecutive medication modules **100** in a train **200** (as later described in detail), the sidewalls **112**, **112** of adjacent modules **100** can be positioned in close proximity, thereby creating a small footprint for the train **200**. Similarly, as a result of the ability to nest the base **110** of a medication module **100** and the base **310** of a medical carts **300**, **500**, the compartments of the medication module **100** can be in close proximity to the work platform **340** of the medical cart **300**, **500**, thereby providing a user with easy access thereto.

To releaseably link the nested medication modules **100** (or a medication module **100** and nested a medical cart **300**, **500**), the base **110** of the medication module **100** is provided with a connection mechanism **171**. The connection mechanism **171** includes an actuator **180**, a first locking mechanism **170**, and a second locking mechanism **190**, as best shown in FIGS. **19** and **20**. The actuator **180**, which may be in the form of a foot pedal, includes a pivot rod **182**. When the foot pedal **180** is depressed, the pivot rod **182** is configured to rotate within rings **192** from a resting position to an active position, thereby activating the first locking mechanism **170**.

The first locking mechanism **170** includes beams **188**, cover plates **186** having sloped surfaces **194**, and catches **184** which comprise cavities **187**. When the rod **182** of the actuator **180** rotates, it pulls the beams **188** toward the center of the base **110**. In turn, the beams **188** cause the cover plates **186** to rotate toward the center of the base **110**. As the cover plates **186** rotate, they expose the cavities **187** in the catches **184**. Correspondingly, when the actuator **180** is released, the rod **182** rotates back to the resting position, thereby pushing the beams **188** away from the center of the base **110** and, in turn, rotating the cover plates **186** to enclose the cavities **187**.

When the cavities **187** are closed, they are designed to releaseably contain posts **197** of a second locking mechanism **190** of another medication module **100** or of a medical cart **300**, **500**. In addition, although the posts **197** may be provided separately on the base **110**, **310**, of the medication module **100** and medical carts **300**, **500**, they are preferably integrally formed by means of a crossbar **196**. Regardless of the design

of the posts **197**, they enable a medication module **100** to be joined to another medication module **100** to form a train **200**, as shown in FIG. **20**.

A train **200** of medication modules **100**A-**100**C can be formed by releaseably aligning the posts **197** of a second locking mechanism **190** of one medication module **100**A with the cover plates **186** of a first locking mechanism **170** of an adjacent medication module **100**B. By pushing the modules **100**A, **100**B toward each other, the posts **197** will slide along the sloped surfaces **194** of the cover plates **186**, thereby causing the cover plates **186** to rotate. As the cover plates **186** rotate, the cavities **187** will be exposed and the posts **197** will slide into them. After the posts **197** slide into the cavities **187**, the cover plates **186** will retract, thereby locking the posts **197** in the cavities. Of course, to add a third medication module **100**C, the posts **197** of the second medication module **100**B would be similarly inserted into the cavities **187** of the third medication module **100**C.

As the medical carts **300**, **500** also include second locking mechanisms **190**, the medication module can be releaseably joined with the medical carts **300**, **500**. For example, as shown in FIGS. **21**A and **21**B, the medication module **100** can be releaseably joined with the medical cart **300** shown in FIG. **16**. Of course, to release the medication module **100** from the medical carts **300**, **500**, a user (e.g., a nurse) would depress the foot pedal actuator **180** (shown in FIG. **21**A) to disengage the first locking mechanism **170** formed under the base **110** of the medication module **100** and the second locking mechanism **190** formed under the base **310** of the medical cart **300**, **500**.

As shown in FIG. **24**, a train **200** of medication modules **100** can be loaded with medication at a central location (e.g., pharmacy) **700**; the number of medication modules **100** may depend on the number of medical carts **300**, **500** that a hospital has on a particular floor on which the medication is to be delivered. A pharmacy technician can then drive the train **200** to a second location **800** at which the individual medication modules **100** can be separated from the train **200**. In addition, the medication modules **100** may be joined (by means of the first connection mechanism **171** thereon) to a medical cart **300**, **500** (by means of the second locking mechanism **190** thereon). One or more nurses **750** can then drive the separated medication modules **100** (with or without a medical cart **300**, **500** affixed thereto) to respective third locations (not shown) at which the nurse may administer medication (contained in the compartments **130**) to a distinct plurality of patients. When the nurse(s)'s rounds are complete, the empty medication modules **100** can be separated from attached medical carts **300**, **500** (if any) and rejoined to form a train **200** of medication modules **100**. The train **200** of medication modules **100** may then be returned to the central location **700** for refilling so that the method of medication transport may be repeated.

Similar to the aforementioned method, a modification may be made. Specifically, there may arise situations in which a nurse **750** does not want to push a combined medication module **100** and medical cart **300**, **500** but wants to enjoy the functionality of the medical cart **300**, **500**. In these situations, the nurse **750** may unlock the compartments **130** of medication module **100** at the second location **800** and remove one or more compartments **130**. The removed compartments **130** could then be exchanged with compartments **530** in the medical cart **500** or placed on the work platform of the medical cart **300** so that the medical cart **300**, **500** then contains the medications which the nurse **750** needs to deliver.

If the compartments **130** of the medication module **100** are exchanged with the compartments **530** of the medical cart **500**, the medication modules **100** containing the empty compartments **530** of the medical carts **500** may then be taken back to central location **700** for refilling while the original medication is being taken by nurses to the patients, so that the method of medication transport can be repeated.

Although the aforementioned describes embodiments of the invention, the invention is not so restricted. It will be apparent to those skilled in the art that various modifications and variations can be made to the disclosed embodiments of the present invention without departing from the scope or spirit of the invention. Accordingly, these other medication modules, medical carts, height adjustment mechanisms, keyless entry systems, and methods of medication transport are fully within the scope of the claimed invention. Therefore, it should be understood that the apparatuses and methods described herein are illustrative only and are not limiting upon the scope of the invention, which is indicated by the following claims.

What is claimed is:

1. A cart comprising:

a work platform including a work surface and at least one compartment for containing an item within the compartment, wherein the work surface is disposed above a top of the at least one compartment;

a base configured to be movable in at least a rearward direction; and

a height adjustment mechanism for adjusting a height of the work platform relative to the base, wherein the height adjustment mechanism is configured to releasably position the work platform at a plurality of heights, the height adjustment mechanism comprising:

a driver configured to releasably position the work platform; and

an actuator for controlling the driver,

wherein the base includes a portion projecting, relative to the height adjustment mechanism, in a forward direction that is substantially opposite to the rearward direction,

wherein the work platform includes a portion projecting, relative to the height adjustment mechanism, in the forward direction, wherein the compartment is disposed in the portion of the work platform projecting in the forward direction, and the compartment is configured to permit a user facing in the rearward direction to access the item within the compartment,

wherein the actuator is disposed above the compartment and on the portion of the work platform projecting in the forward direction, and

wherein the work surface is movable relative to a remainder of the work platform from an extended position to a non-extended position.

2. The cart of claim **1**, wherein the height adjustment mechanism comprises a first telescoping portion connected to the base, and a second telescoping portion connected to the work platform and configured to move relative to the first telescoping portion, and wherein the driver is configured to releasably position the second telescoping portion relative to the first telescoping portion.

3. The cart of claim **2**, wherein the first telescoping portion is a stationary outer casing, and the second telescoping portion is a movable inner casing.

4. The cart of claim **1**, wherein the work portion includes a handle on the portion of the work platform projecting in the forward direction, wherein the actuator is disposed on the handle.

5. The cart of claim **1**, wherein the actuator is disposed at a spaced vertical distance above the compartment.

6. The cart of claim **1**, wherein the work platform further comprises a movable platform configured to move in at least one of the forward direction and the rearward direction.

7. The cart of claim **1**, wherein the work surface is configured to move in at least one of a leftward direction and a rightward direction along an arcuate path that faces the forward direction.

8. The cart of claim **1**, wherein the driver includes a piston that, in response to the user's actuation of the actuator, permits gas to flow out of the piston during lowering of the height of the work platform, and that, in response to the user's actuation of the actuator, permits gas to flow into the piston during increasing of the height of the work platform.

9. A cart comprising:

a work platform including a movable platform, a work surface movable relative to the movable platform, and at least one compartment for containing an item, wherein the movable platform and the work surface are disposed above a to of the at least one compartment;

a base configured to be movable in at least a rearward direction; and

a height adjustment mechanism for adjusting a height of the work platform relative to the base,

wherein the base includes a portion projecting, relative to the height adjustment mechanism, in a forward direction that is substantially opposite to the rearward direction,

wherein the work platform includes a portion projecting, relative to the height adjustment mechanism, in the forward direction, the at least one compartment is disposed in the portion of the work platform projecting in the forward direction, and the at least one compartment is configured to permit a user facing in the rearward direction to access the item within the at least one compartment,

wherein the movable platform can be moved in at least one of the forward and rearward directions,

wherein the work surface can be moved in at least one of a leftward direction and a rightward direction relative to the movable platform, and

wherein the work surface is configured to move in the at least one of the leftward direction and rightward direction through a slot in a side of the portion of the work platform projecting in the forward direction.

10. The cart of claim **9**, wherein the work surface is configured to move in the at least one of the leftward and rightward directions along an arcuate path that faces the forward direction.

11. The cart of claim **9**, wherein the work surface is configured to move in both the leftward direction through the slot and the rightward direction through another slot along an arcuate path that faces the forward direction.

12. The cart of claim **9**, wherein the work platform is configured such that the work surface can be disposed below the movable platform.

13. The cart of claim **9**, wherein the work platform is configured such that the movable platform can be moved in the at least one of the forward and rearward directions without moving the work surface.

14. The cart of claim **9**, wherein the at least one compartment comprises a plurality of compartments.

15. The cart of claim **9**, wherein the movable platform is a laptop platform.

16. A cart comprising:

a work platform including a movable platform, a work surface movable relative to the movable platform, and at least one compartment for containing an item;

a base configured to be movable in at least a rearward direction; and

a height adjustment mechanism for adjusting a height of the work platform relative to the base,

wherein the base includes a portion projecting, relative to the height adjustment mechanism, in a forward direction that is substantially opposite to the rearward direction,

wherein the work platform includes a portion projecting, relative to the height adjustment mechanism, in the forward direction, wherein the at least one compartment is disposed in the portion of the work platform projecting in the forward direction, and the at least one compartment is configured to permit a user facing in the rearward direction to access the item within the at least one compartment,

wherein the movable platform can be moved in at least one of the forward and rearward directions, and

wherein the work surface can be moved in at least one of a leftward direction and a rightward direction relative to the movable platform,

wherein the work platform includes a secondary work surface, and the work platform is configured such that both the secondary work surface and the movable platform are exposed when the movable platform moves in the at least one of the forward and rearward directions, and

wherein the secondary work surface and the movable platform are positioned above a top of the at least one compartment.

17. The cart of claim **16**, wherein the work surface is configured to move in the at least one of the leftward direction and the rightward direction along an arcuate path that faces the forward direction.

18. The cart of claim **16**, wherein the work surface is configured to move in both the leftward direction and the rightward direction.

19. The cart of claim **16**, wherein the work platform is configured such that the work surface can be disposed below the movable platform.

20. The cart of claim **16**, wherein the work platform is configured such that the movable platform can be moved in the at least one of the forward and rearward directions without moving the work surface.

21. The cart of claim **16**, wherein the work platform is configured such that the secondary work surface can be positioned in vertical alignment with the movable platform.

22. The cart of claim **16**, wherein the work platform is configured such that the secondary work surface can be disposed beneath the movable platform.

23. The cart of claim **16**, wherein the at least one compartment comprises a plurality of compartments.

24. The cart of claim **16**, wherein the movable platform is a laptop platform.

* * * * *

EXHIBIT C

Case: 1:22-cv-05527 Document #: 5 Filed: 10/11/22 Page 65 of 99 PageID #:164

PATENT ASSIGNMENT COVER SHEET

Electronic Version v1.1
Stylesheet Version v1.2

EPAS ID: PAT3615744

SUBMISSION TYPE:	NEW ASSIGNMENT
NATURE OF CONVEYANCE:	ASSIGNMENT

CONVEYING PARTY DATA

Name	Execution Date
RUBBERMAID, INCORPORATED	11/09/2015

RECEIVING PARTY DATA

Name:	CAPSA SOLUTIONS, LLC
Street Address:	4253 NE 189TH AVE
City:	PORTLAND
State/Country:	OREGON
Postal Code:	97230

PROPERTY NUMBERS Total: 19

Property Type	Number
Patent Number:	7594668
Patent Number:	8109527
Patent Number:	8196939
Patent Number:	8905496
Patent Number:	8567735
Patent Number:	8215650
Patent Number:	8662605
Patent Number:	8677911
Patent Number:	8616136
Patent Number:	D504259
Patent Number:	D504260
Patent Number:	D515767
Patent Number:	D517768
Patent Number:	D518267
Patent Number:	D650142
Patent Number:	D661512
Application Number:	13942463
Application Number:	13803923
Application Number:	14531108

CORRESPONDENCE DATA

Fax Number: (614)792-5536

Correspondence will be sent to the e-mail address first; if that is unsuccessful, it will be sent using a fax number, if provided; if that is unsuccessful, it will be sent via US Mail.

Phone: 6147925555

Email: standleydocketing@standleyllp.com

Correspondent Name: STANDLEY LAW GROUP LLP

Address Line 1: 6300 RIVERSIDE DRIVE

Address Line 4: DUBLIN, OHIO 43017

ATTORNEY DOCKET NUMBER:	CAP2491-001
NAME OF SUBMITTER:	TYLER S. DUNHAM
SIGNATURE:	/Tyler S. Dunham/
DATE SIGNED:	11/13/2015

Total Attachments: 3

source=20151113 Rubbermaid Incorporated Assign#page1.tif

source=20151113 Rubbermaid Incorporated Assign#page2.tif

source=20151113 Rubbermaid Incorporated Assign#page3.tif

ASSIGNMENT OF PATENTS

THIS ASSIGNMENT OF PATENTS (this "Assignment") is made with effect from the Asset Purchase Agreement by and among Capsa Solutions, LLC; Rubbermaid Commercial Products, LLC; and Rubbermaid Incorporated, executed on August 6, 2015 (the "Effective Date") by Rubbermaid, Incorporated, an Ohio corporation with offices at 8900 Northpointe Executive Drive, Huntersville, NC 28078 ("Assignor") in favor of and to Capsa Solutions, LLC, a Delaware limited liability company with offices at 4253 NE 189th Ave, Portland OR 97230 ("Assignee").

FOR AT LEAST ONE U.S. DOLLAR ($1.00) AND FOR OTHER GOOD AND VALUABLE CONSIDERATION, the receipt of which is hereby acknowledged, ASSIGNOR does hereby sell, assign and transfer to ASSIGNEE the entire right, title and interest, together with all rights of priority, in and to the patents and patent applications identified in Schedule A and inventions therein ("Assigned Intellectual Property Rights"). ASSIGNOR further does hereby sell, assign and transfer to ASSIGNEE the entire right, title and interest, together with all rights of priority, in and to ASSIGNOR'S inventions as described and/or claimed in any and all applications for patents based on the Assigned Intellectual Property Rights, including divisionals, continuations, renewals, substitutes and reissues thereof, and all rights of priority resulting from any of these patent applications, as well as all foreign counterparts and extensions thereof, together with all patents issuing on any of these applications for the full terms of all of the patents which may be granted on the inventions of the Assigned Intellectual Property Rights.

ASSIGNOR HEREBY AUTHORIZES ASSIGNEE to make applications for, to prosecute such applications, and to receive patents for the inventions of the Assigned Intellectual Property Rights in the United States and any foreign countries, in ASSIGNEE's name.

ASSIGNOR HEREBY PROMISES AND AGREES that ASSIGNOR will execute or procure any further necessary assurance of title to the inventions of the Assigned Intellectual Property Rights and any patents which may issue on the inventions. ASSIGNOR will, at any time, upon the request and without further consideration, but at the expense of ASSIGNEE, deliver any testimony in any legal proceedings and execute all papers and do all other things that may be necessary or desirable to perfect the title to the inventions of the Assigned Intellectual Property Rights, or any patents which may be granted therefor, in ASSIGNEE, its successors, assigns, or other legal representatives. ASSIGNOR will, at any time, upon the request and at the expense of ASSIGNEE, execute any continuations, divisionals, reissues, or any other additional applications for patents for the inventions of the Assigned Intellectual Property Rights or any part or parts thereof and any patents issuing thereon are hereby assigned to ASSIGNEE. ASSIGNOR will make all rightful oaths, and do all lawful acts required for procuring and enforcing any of the patents, without further compensation, but at the expense of ASSIGNEE, its successors, assigns or other legal representatives.

ASSIGNOR HEREBY AUTHORIZES AND REQUESTS the Commissioner of Patents and Trademarks to issue any and all Letters Patent of the United States for the invention, resulting from any of the aforesaid applications to the ASSIGNEE.

ASSIGNOR AND ASSIGNEE HEREBY AGREE that nothing set forth in this Assignment is intended to modify, expand, or limit the rights as granted in the Asset Purchase Agreement between the parties. The Asset Purchase Agreement shall control in the event any conflict that exists between the terms of this Assignment and the terms of Asset Purchase Agreement.

RUBBERMAID, INCORPORATED

Brian Decker, ASSIGNOR
Assistant Secretary
Date Signed: 11/9/2015

STATE OF Georgia :
COUNTY OF Fulton : SS.

Before me personally appeared Brian Decker, to me known to be the same person described in and who executed the foregoing instrument, and acknowledged that he/she executed the same, of his/her own free will and for the purposes set forth. Sworn to before me and subscribed in my presence this 9th day of November, 2015.

(seal) SARA MEDINA MY COMMISSION EXPIRES JAN 30 2018 DEKALB CO., GEORGIA NOTARY PUBLIC

Notary Public

SCHEDULE A

U.S Patent Application Number	Patent Number	Title
12/193,346	7,594,668	Medical Cart, Medication Module, Height Adjustment Mechanism, and Method of Medication Transport
12/389,716	8,109,527	MEDICAL CART AND KEYBOARD TRAY
12/389,721	8,196,939	MEDICAL CART AND DRAWER ASSEMBLY AND LOCK
12/636,181	8,905,496	WALL WORK STATION (Wall Arm)
13/016,367	8,567,735	HEIGHT ADJUSTMENT LOCK
13/187,328	8,215,650	Medical Cart, Medication Module, Height Adjustment Mechanism, and Method of Medication Transport
13/397,048	8,662,605	Mobile Medical Cabinet (MVA - Mobile Technology)
13/399,212	8,677,911	Non-Powered Technology Cart
13/942,463		Medical Cart, Medication Module, Height Adjustment Mechanism, and Method of Medication Transport
13/803,923		Height Adjustable Monitor Mount (HAMM)
14/531,108		WALL WORK STATION (Wall Arm)
13/016,377	8,616,136	INDEPENDENT KEYBOARD TILT
29/199,984	D504,259	CART (Basic Computing Cart)
29/199,985	D504,260	CART (Medication Module) Drawer Face
29/196,712	D515,767	CART (Medication Module)
29/196,714	D517,768	CART (EMAR Computing Cart)
29/196,713	D518,267	CART (Basic Computing Cart)
29/385,720	D650,142	Technology Cart
29/385,719	D661,512	Mobile Medical Cabinet

Fig. 3A

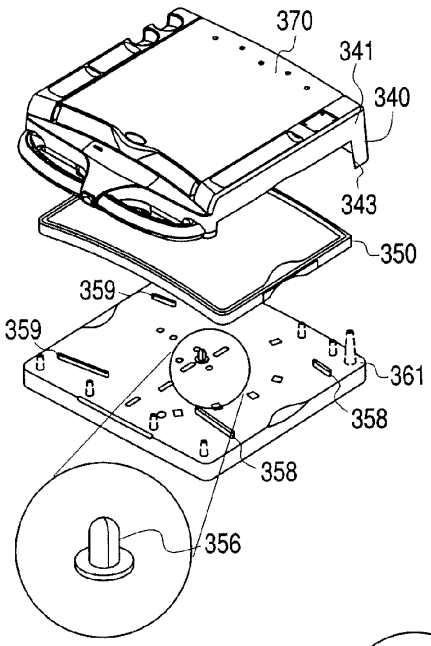

Fig. 3B

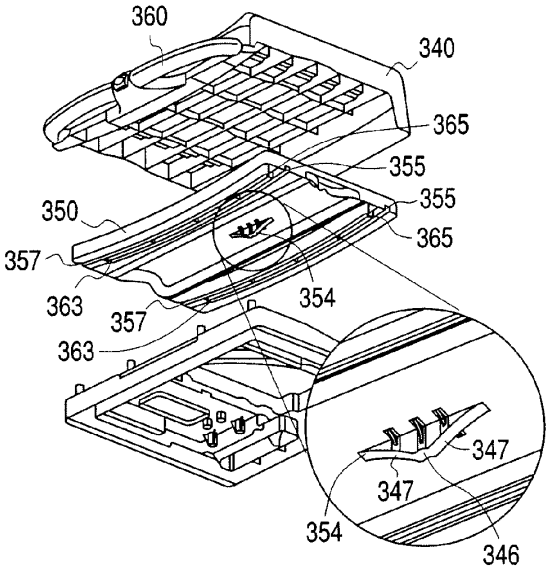

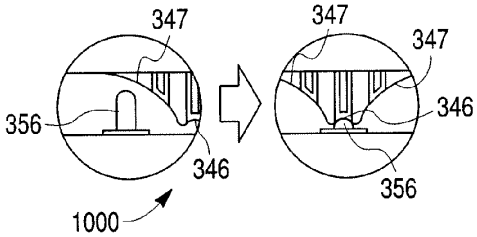

Fig. 3C

EXHIBIT D

Claim Chart (Simplifi)

US Patent No. 7,594,668

Claim 3	**Simplifi EVA and ENV lines of carts**
A cart comprising:	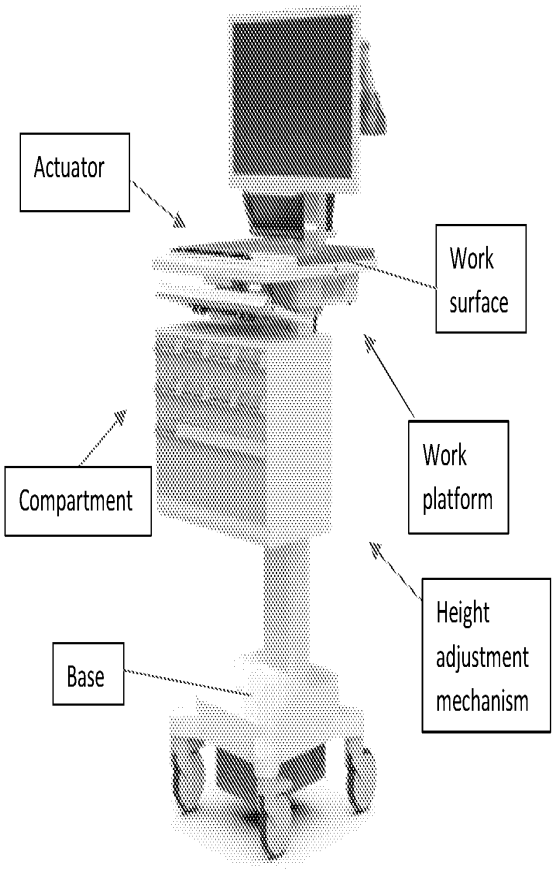
a work platform including a work surface and compartments for containing items;	
a base configured to be movable in at least a rearward direction; and	
a height adjustment mechanism for adjusting the height of the work platform relative to the base,	
wherein the base includes a portion that projects from the height adjustment mechanism in a forward direction that is substantially opposite to the rearward direction,	
wherein the work platform includes a portion that projects from the height adjustment mechanism in the forward direction, the compartments are disposed in the portion of the work platform that projects from the height adjustment mechanism in the forward direction, and the compartments are configured to permit a user facing in the rearward direction to access an item within the compartments,	
wherein the height adjustment mechanism is configured to releasably lock the work platform at a plurality of heights,	
wherein the height adjustment mechanism comprises:	
a stationary casing connected to the base;	
a telescoping casing connected to the work platform and configured to move relative to the stationary casing;	
at least two drawer slides disposed between the stationary casing and the telescoping casing;	
a driver configured to releasably lock the telescoping casing relative to the stationary casing; and	
an actuator for controlling the driver, and	

Claim Chart (Simplifi)

wherein the actuator is disposed above the compartments and on the portion of the work platform that projects in the forward direction.	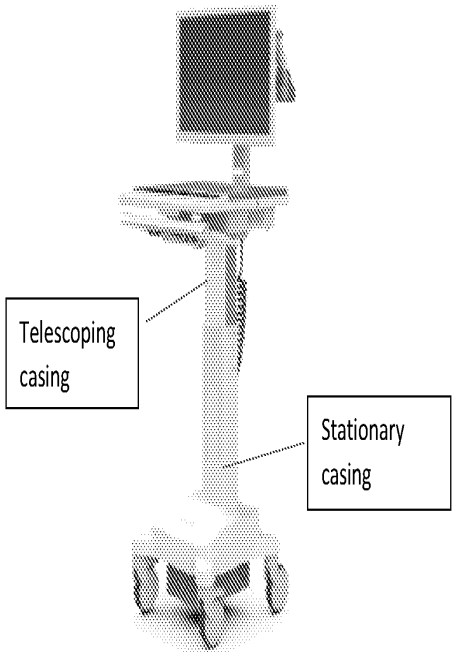 Simplifi's website describes a "motorized lift mechanism" *See e.g.,* https://simplifimedical.com/ 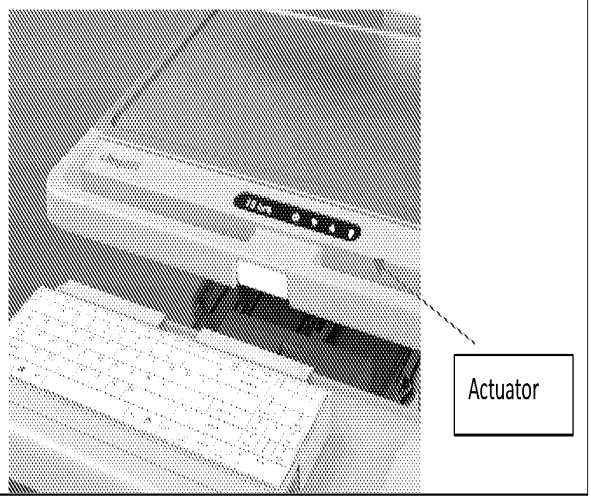

Claim Chart (Simplifi)

	 A driver is necessarily required to provide the height adjustability. The devices have a driver, or an equivalent to a driver, used to adjust the height of the work platform at different heights. Any differences are insubstantial, and do not change the invention's identity, operation, at least in any significant way. At least two drawer slides disposed between the stationary casing and the telescoping casing is necessarily required to provide the height adjustability. In the alternative to direct infringement, if this claim is not found to directly infringe, it is my opinion that this limitation is found in the accused devices under the doctrine of equivalents. The accused devices have components equivalent to the claimed drawer slides that have substantially the same function, that work in substantially the same way, to accomplish substantially the same function. Any

Claim Chart (Simplifi)

	differences are insubstantial, and do not change the invention's identity, operation, at least in any significant way.

Claim Chart (Simplifi)

US Patent No. 7,594,668

Claim 4	**Simplifi EVA and ENV lines of carts**
A cart comprising:	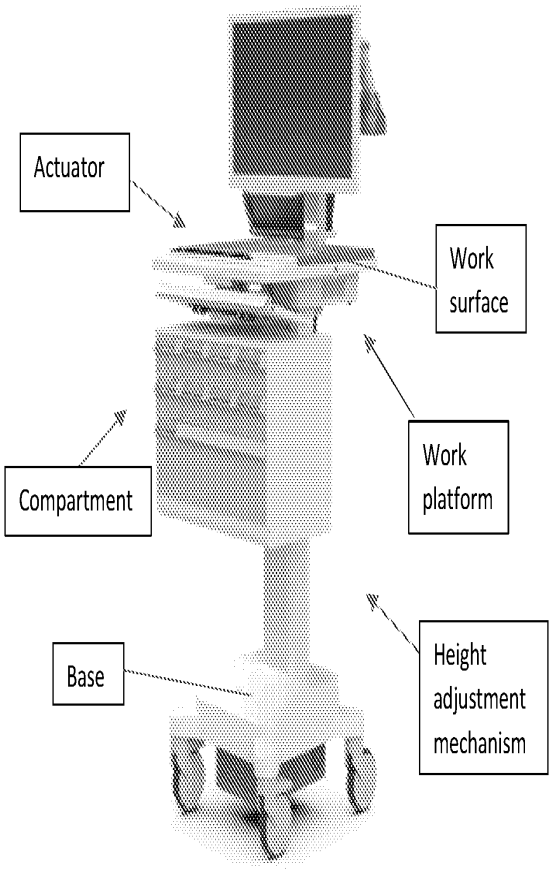
a work platform including a work surface and at least one compartment for containing an item within the compartment;	
a base configured to be movable in at least a rearward direction; and	
a height adjustment mechanism for adjusting the height of the work platform relative to the base, wherein the height adjustment mechanism is configured to releasably lock the work platform at a plurality of heights, the height adjustment mechanism comprising:	
a stationary casing connected to the base;	
a telescoping casing connected to the work platform and configured to move relative to the stationary casing;	
a driver configured to releasably lock the telescoping casing relative to the stationary casing; and	
an actuator for controlling the driver,	
wherein the base includes a portion that projects from the height adjustment mechanism in a forward direction that is substantially opposite to the rearward direction,	
wherein the work platform includes a portion that projects from the height adjustment mechanism in the forward direction, the compartment is disposed in the portion of the work platform that projects from the height adjustment mechanism in the forward direction, and the compartment is configured to permit a user facing in the rearward direction to access an item within the compartment,	
wherein the actuator is disposed above the compartment and on the portion of the work platform that projects in the forward direction.	

Claim Chart (Simplifi)

	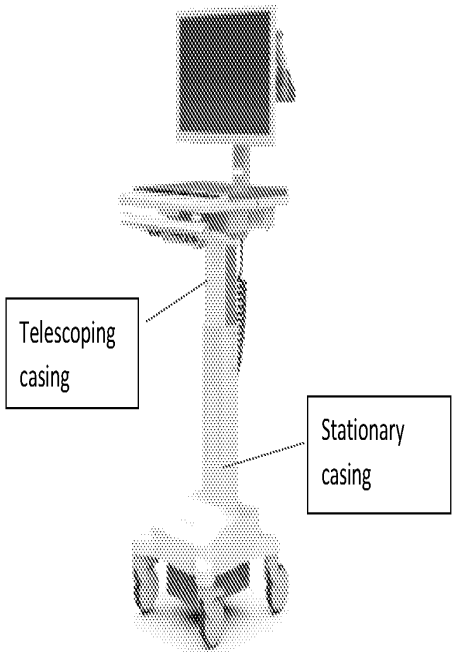 Simplifi's website describes a "motorized lift mechanism" *See e.g.,* https://simplifimedical.com/ 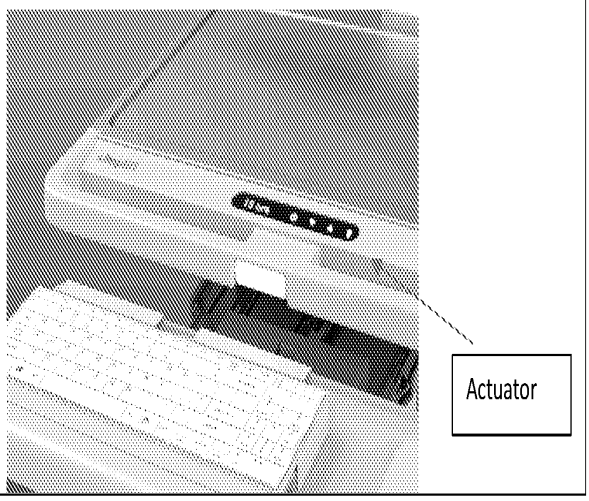

Claim Chart (Simplifi)

	 A driver is necessarily required to provide the height adjustability. The devices have a driver, or an equivalent to a driver, used to adjust the height of the work platform at different heights. Any differences are insubstantial, and do not change the invention's identity, operation, at least in any significant way.

Claim Chart (Simplifi)

US Patent No. 8,215,650

Claim 1	**Simplifi EVA and ENV lines of carts**
A cart comprising:	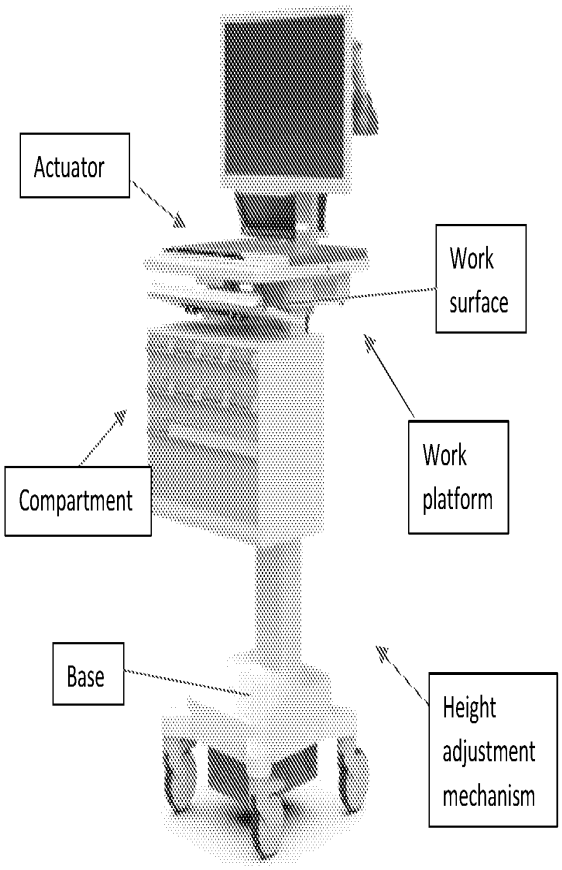
a work platform including a work surface and at least one compartment for containing an item within the compartment, wherein the work surface is disposed above a top of the at least one compartment;	
a base configured to be movable in at least a rearward direction; and	
a height adjustment mechanism for adjusting a height of the work platform relative to the base, wherein the height adjustment mechanism is configured to releasably position the work platform at a plurality of heights, the height adjustment mechanism comprising:	
a driver configured to releasably position the work platform; and	
an actuator for controlling the driver,	
wherein the base includes a portion projecting, relative to the height adjustment mechanism, in a forward direction that is substantially opposite to the rearward direction,	
wherein the work platform includes a portion projecting, relative to the height adjustment mechanism, in the forward direction, wherein the compartment is disposed in the portion of the work platform projecting in the forward direction, and the compartment is configured to permit a user facing in the rearward direction to access the item within the compartment,	
wherein the actuator is disposed above the compartment and on the portion of the work platform projecting in the forward direction, and	
wherein the work surface is movable relative to a remainder of the work platform from an extended position to a non-extended position.	

Claim Chart (Simplifi)

	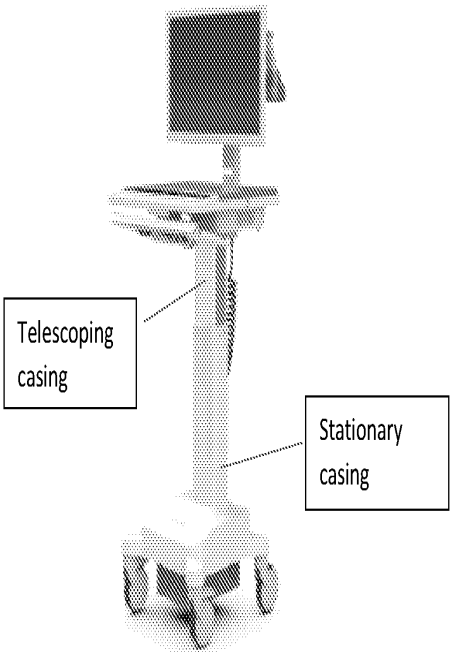 Simplifi's website describes a "motorized lift mechanism" *See e.g.,* https://simplifimedical.com/ 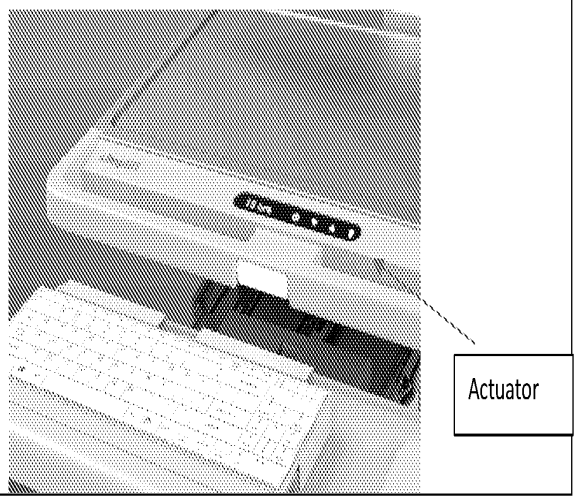

Fig. 4A

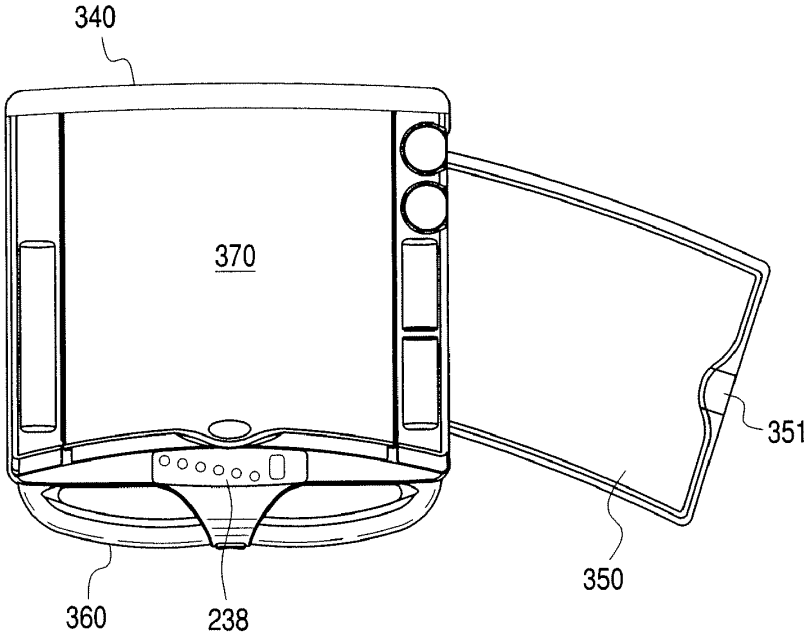

Fig. 4B

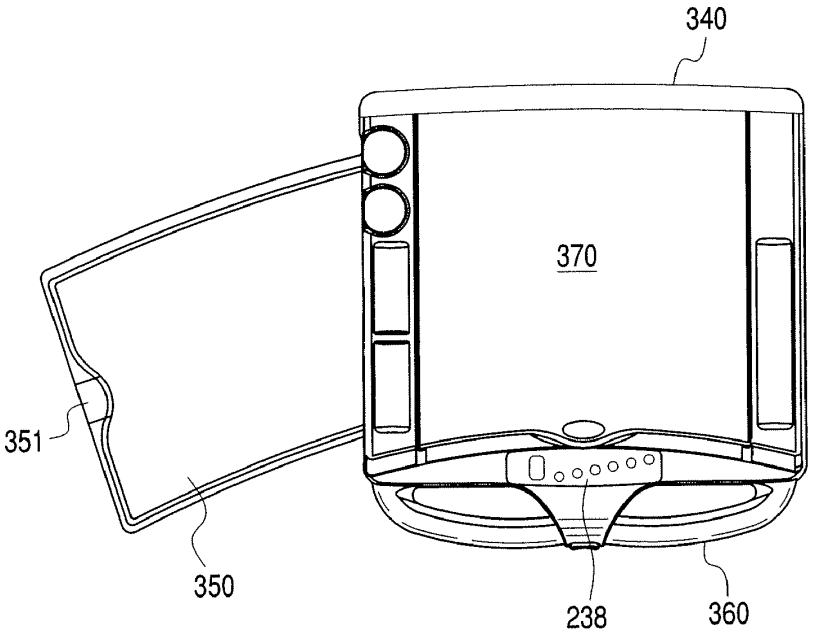

Claim Chart (Simplifi)

	 A driver is necessarily required to provide the height adjustability. The devices have a driver, or an equivalent to a driver, used to adjust the height of the work platform at different heights. Any differences are insubstantial, and do not change the invention's identity, operation, at least in any significant way. The carts include a keyboard tray capable of sliding movement.

Fig. 5A

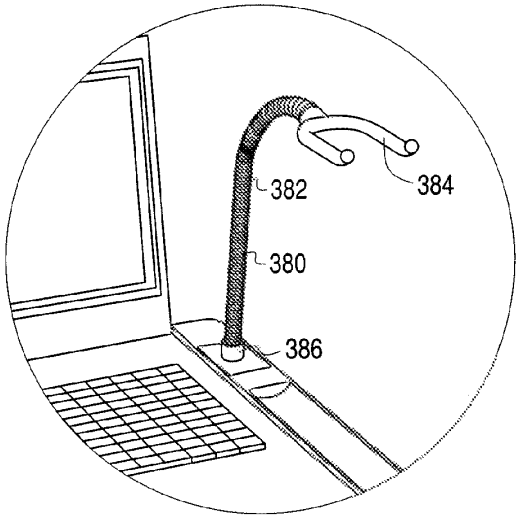

Fig. 5B

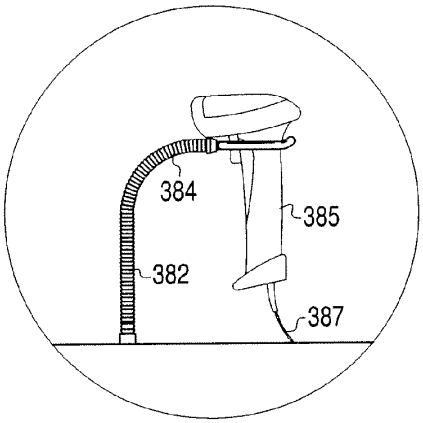

Fig. 5C

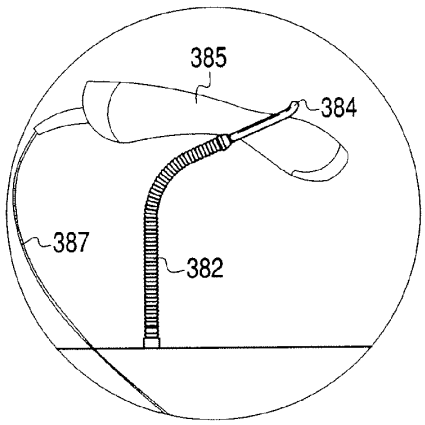

AO 120 (Rev. 08/10)

TO:	Mail Stop 8 Director of the U.S. Patent and Trademark Office P.O. Box 1450 Alexandria, VA 22313-1450	REPORT ON THE FILING OR DETERMINATION OF AN ACTION REGARDING A PATENT OR TRADEMARK

In Compliance with 35 U.S.C. § 290 and/or 15 U.S.C. § 1116 you are hereby advised that a court action has been filed in the U.S. District Court Southern District of MS - Eastern Division on the following

☐ Trademarks or ☑ Patents. (☐ the patent action involves 35 U.S.C. § 292.):

DOCKET NO.	DATE FILED	U.S. DISTRICT COURT
2:22-cv-65-HSO-RHW	5/12/2022	Southern District of MS - Eastern Division

PLAINTIFF	DEFENDANT
Capsa Solutions LLC	Howard Industries, Inc.

PATENT OR TRADEMARK NO.	DATE OF PATENT OR TRADEMARK	HOLDER OF PATENT OR TRADEMARK
1 7,594,668	11/9/2015	Capsa Solutions LLC
2 8,215,650	11/9/2015	Capsa Solutions LLC
3 8,109,527	11/9/2015	Capsa Solutions LLC
4 D762,339	11/9/2015	Capsa Solutions LLC
5 9,039,016	3/25/2022	Capsa Solutions LLC

In the above—entitled case, the following patent(s)/ trademark(s) have been included:

DATE INCLUDED	INCLUDED BY
5/12/2022	Original Complaint ☐ Amendment ☐ Answer ☐ Cross Bill ☐ Other Pleading

PATENT OR TRADEMARK NO.	DATE OF PATENT OR TRADEMARK	HOLDER OF PATENT OR TRADEMARK
1 10,159,337	3/25/2022	Capsa Solutions LLC
2 10,299,582	3/25/2022	Capsa Solutions LLC
3		
4		
5		

In the above—entitled case, the following decision has been rendered or judgement issued:

DECISION/JUDGEMENT

CLERK	(BY) DEPUTY CLERK	DATE

Copy 1—Upon initiation of action, mail this copy to Director **Copy 3—Upon termination of action, mail this copy to Director**
Copy 2—Upon filing document adding patent(s), mail this copy to Director **Copy 4—Case file copy**

United States Patent and Trademark Office

Office of the Chief Financial Officer

Document Code:WFEE

User :C55319

Sale Accounting Date:10/15/2019

Sale Item Reference Number	Effective Date
13187328	10/14/2019

Document Number	Fee Code	Fee Code Description	Amount Paid	Payment Method
I20190EC21166658	2552	MAINTENANCE FEE DUE AT 7.5 YEARS	$1,800.00	Deposit Account

IN THE UNITED STATES PATENT AND TRADEMARK OFFICE

Patent No.:	8,215,650
Issued:	July 10, 2012
Application No.:	13/187,328
Inventor:	Radmond Vincent Arceta et al.
Assignee:	Capsa Solutions, LLC
Group Art Unit:	3618
Examiner:	Frank Bennett Vanaman
Title:	MEDICAL CART, MEDICATION MODULE, HEIGHT ADJUSTMENT MECHANISM, AND METHOD OF MEDICATION TRASNPORT
Docket No.:	CAP2491-045B

CERTIFICATE OF MAILING UNDER 37 C.F.R. §1.8 (A)

I hereby certify that this correspondence is being facsimile transmitted to the United States Patent and Trademark Office at Central Fax No. (571) 273-6500 on October 14, 2019.

/Brianna J. Lacy/
Brianna J. Lacy, Paralegal

CHANGE IN ENTITY STATUS UNDER 37 CFR 1.27

A recent review of the captioned patent revealed that the patent qualifies for small entity status. Therefore, the attached second maintenance fee is being paid at the small entity rate. Please update the official record to reflect the change in entity status from undiscounted entity status to small entity status.

Respectfully submitted,

Date: October 14, 2019

By: /Adam J. Smith/
Adam J. Smith
Registration No.: 72,962
Standley Law Group LLP
6300 Riverside Drive
Dublin, Ohio 43017
Telephone: (614) 792-5555
Facsimile: (614) 792-5536

AO 120 (Rev. 08/10)

TO:	Mail Stop 8 Director of the U.S. Patent and Trademark Office P.O. Box 1450 Alexandria, VA 22313-1450	REPORT ON THE FILING OR DETERMINATION OF AN ACTION REGARDING A PATENT OR TRADEMARK

In Compliance with 35 U.S.C. § 290 and/or 15 U.S.C. § 1116 you are hereby advised that a court action has been filed in the U.S. District Court Western District of North Carolina on the following

☐ Trademarks or ☑ Patents. (☐ the patent action involves 35 U.S.C. § 292.):

DOCKET NO.	DATE FILED	U.S. DISTRICT COURT
3:12-cv-416	7/10/2012	Western District of North Carolina

PLAINTIFF	DEFENDANT
Rubbermaid Incorporated d/b/a Rubbermaid Medical Solutions	Ergotron, Inc.

PATENT OR TRADEMARK NO.	DATE OF PATENT OR TRADEMARK	HOLDER OF PATENT OR TRADEMARK
1 8,215,650	Jul. 10, 2012	Arceta et al
2		
3		
4		
5		

In the above—entitled case, the following patent(s)/ trademark(s) have been included:

DATE INCLUDED	INCLUDED BY ☐ Amendment ☐ Answer ☐ Cross Bill ☐ Other Pleading	
PATENT OR TRADEMARK NO.	DATE OF PATENT OR TRADEMARK	HOLDER OF PATENT OR TRADEMARK
1		
2		
3		
4		
5		

In the above—entitled case, the following decision has been rendered or judgement issued:

DECISION/JUDGEMENT

Stipulation of Dismissal filed 6/27/2014

CLERK	(BY) DEPUTY CLERK	DATE
Frank G. Johns	s/ Tammy Gryder	6/27/2014

Copy 1—Upon initiation of action, mail this copy to Director **Copy 3—Upon termination of action, mail this copy to Director**
Copy 2—Upon filing document adding patent(s), mail this copy to Director **Copy 4—Case file copy**

IN THE UNITED STATES DISTRICT COURT
FOR THE WESTERN DISTRICT OF NORTH CAROLINA
CHARLOTTE DIVISION

RUBBERMAID INCORPORATED d/b/a RUBBERMAID MEDICAL SOLUTIONS,	
Plaintiff,	**Civil Action No. 3:12-cv-00416-RJC-DSC**
v.	**Chief Judge Robert J. Conrad, Jr.**
ERGOTRON, INC.,	**JURY TRIAL DEMANDED**
Defendant.	

STIPULATION OF DISMISSAL

COME TOGETHER Plaintiff Rubbermaid Incorporated d/b/a Rubbermaid Medical Solutions ("Rubbermaid") and Defendant Ergotron, Inc. ("Ergotron"), by their respective counsel, pursuant to the Court's Order of June 25, 2014 (Dkt. No. 45), and hereby stipulate to the dismissal with prejudice of all claims and counterclaims between them in this action, pursuant to Rule 41(a)(1)(A)(ii) of the Federal Rules of Civil Procedure and the terms of a settlement agreement executed by the parties. Each party shall bear its own costs, expenses and attorneys' fees.

AO 120 (Rev. 08/10)

TO: Mail Stop 8 Director of the U.S. Patent and Trademark Office P.O. Box 1450 Alexandria, VA 22313-1450	REPORT ON THE FILING OR DETERMINATION OF AN ACTION REGARDING A PATENT OR TRADEMARK

In Compliance with 35 U.S.C. § 290 and/or 15 U.S.C. § 1116 you are hereby advised that a court action has been filed in the U.S. District Court Western District of North Carolina on the following

☐ Trademarks or ☑ Patents. (☐ the patent action involves 35 U.S.C. § 292.):

DOCKET NO.	DATE FILED	U.S. DISTRICT COURT
3:12-cv-416	7/10/2012	Western District of North Carolina

PLAINTIFF	DEFENDANT
Rubbermaid Incorporated d/b/a Rubbermaid Medical Solutions	Ergotron, Inc.

PATENT OR TRADEMARK NO.	DATE OF PATENT OR TRADEMARK	HOLDER OF PATENT OR TRADEMARK
1 8,215,650	Jul. 10, 2012	Arceta et al
2		
3		
4		
5		

In the above—entitled case, the following patent(s)/ trademark(s) have been included:

DATE INCLUDED	INCLUDED BY ☐ Amendment ☐ Answer ☐ Cross Bill ☐ Other Pleading	
PATENT OR TRADEMARK NO.	DATE OF PATENT OR TRADEMARK	HOLDER OF PATENT OR TRADEMARK
1		
2		
3		
4		
5		

In the above—entitled case, the following decision has been rendered or judgement issued:

DECISION/JUDGEMENT

Stipulation of Dismissal filed 6/27/2014

CLERK	(BY) DEPUTY CLERK	DATE
Frank G. Johns	s/ Tammy Gryder	6/27/2014

Copy 1—Upon initiation of action, mail this copy to Director Copy 3—Upon termination of action, mail this copy to Director
Copy 2—Upon filing document adding patent(s), mail this copy to Director Copy 4—Case file copy

IN THE UNITED STATES DISTRICT COURT
FOR THE WESTERN DISTRICT OF NORTH CAROLINA
CHARLOTTE DIVISION

RUBBERMAID INCORPORATED d/b/a RUBBERMAID MEDICAL SOLUTIONS,	
Plaintiff,	**Civil Action No. 3:12-cv-00416-RJC-DSC**
v.	**Chief Judge Robert J. Conrad, Jr.**
ERGOTRON, INC.,	**JURY TRIAL DEMANDED**
Defendant.	

STIPULATION OF DISMISSAL

COME TOGETHER Plaintiff Rubbermaid Incorporated d/b/a Rubbermaid Medical Solutions ("Rubbermaid") and Defendant Ergotron, Inc. ("Ergotron"), by their respective counsel, pursuant to the Court's Order of June 25, 2014 (Dkt. No. 45), and hereby stipulate to the dismissal with prejudice of all claims and counterclaims between them in this action, pursuant to Rule 41(a)(1)(A)(ii) of the Federal Rules of Civil Procedure and the terms of a settlement agreement executed by the parties. Each party shall bear its own costs, expenses and attorneys' fees.

Dated: June 27, 2014

Respectfully submitted,

s/ Derek H. Swanson	s/ Kurt John Niederluecke
David E. Finkelson (admitted *pro hac vice*) Derek H. Swanson (admitted *pro hac vice*) Andriana S. Daly (admitted *pro hac vice*) McGuireWoods LLP One James Center 901 East Cary Street Richmond, VA 23219 Tel: 804.775.1081 Fax: 804.698.2258 *dfinkelson@mcguirewoods.com* *dswanson@mcguirewoods.com* *adaly@mcguirewoods.com* Robert A. Muckenfuss (N.C. Bar No. 28218) McGuireWoods LLP 201 North Tryon St. Charlotte, NC 28202 Tel: 704.343.2090 Fax: 704.373.8935 *rmuckenfuss@mcguirewoods.com* *Counsel for Plaintiff Rubbermaid Incorporated d/b/a Rubbermaid Medical Solutions*	Kurt John Niederluecke (admitted *pro hac vice*) Grant D. Fairbairn (admitted *pro hac vice*) Laura Myers (admitted *pro hac vice*) Fredrikson & Bryon, P.A. 200 South Sixth St. Suite 4000 Minneapolis, MN 55402 Tel: 612.492.7000 Fax: 612.492.7700 *kniederluecke@fredlaw.com* *gfairbairn@fredlaw.com* *lmyers@fredlaw.com* Lawrence C. Moore , III Nathan C. Chase, Jr. Robinson, Bradshaw & Hinson, P. A. 101 N. Tryon St. Suite 190 Charlotte, NC 28246 Tel: 704.377.8303 Fax: 704.373.3903 *lmoore@rbh.com* *nchase@rbh.com* *Counsel for Defendant Ergotron, Inc.*

CERTIFICATE OF SERVICE

I hereby certify that on June 27, 2014, a copy of the foregoing was filed electronically using the Court's CM/ECF System, which will send a notification of such filing to the following counsel of record:

Kurt John Niederluecke
Grant D. Fairbairn
Laura Myers
Fredrikson & Bryon, P.A.
200 South Sixth St.
Suite 4000
Minneapolis, MN 55402
Tel: 612.492.7000
Fax: 612.492.7700
kniederluecke@fredlaw.com
gfairbairn@fredlaw.com
lmyers@fredlaw.com

Lawrence C. Moore , III
Nathan C. Chase, Jr.
Robinson, Bradshaw & Hinson, P. A.
101 N. Tryon St.
Suite 190
Charlotte, NC 28246
Tel: 704.377.8303
Fax: 704.373.3903
lmoore@rbh.com
nchase@rbh.com

s/ Derek H. Swanson
Derek H. Swanson (admitted *pro hac vice*)
McGuireWoods LLP
One James Center
901 East Cary Street
Richmond, VA 23219
Tel: 804.775.1081
Fax: 804.698.2258
dswanson@mcguirewoods.com

Counsel for Plaintiff Rubbermaid Incorporated d/b/a Rubbermaid Medical Solutions

UNITED STATES PATENT AND TRADEMARK OFFICE

UNITED STATES DEPARTMENT OF COMMERCE
United States Patent and Trademark Office
Address: COMMISSIONER FOR PATENTS
P.O. Box 1450
Alexandria, Virginia 22313-1450
www.uspto.gov

APPLICATION NO.	ISSUE DATE	PATENT NO.	ATTORNEY DOCKET NO.	CONFIRMATION NO.
13/187,328	07/10/2012	8215650	086554-1553	6052

22428 7590 06/20/2012
FOLEY AND LARDNER LLP
SUITE 500
3000 K STREET NW
WASHINGTON, DC 20007

ISSUE NOTIFICATION

The projected patent number and issue date are specified above.

Determination of Patent Term Adjustment under 35 U.S.C. 154 (b)
(application filed on or after May 29, 2000)

The Patent Term Adjustment is 0 day(s). Any patent to issue from the above-identified application will include an indication of the adjustment on the front page.

If a Continued Prosecution Application (CPA) was filed in the above-identified application, the filing date that determines Patent Term Adjustment is the filing date of the most recent CPA.

Applicant will be able to obtain more detailed information by accessing the Patent Application Information Retrieval (PAIR) WEB site (http://pair.uspto.gov).

Any questions regarding the Patent Term Extension or Adjustment determination should be directed to the Office of Patent Legal Administration at (571)-272-7702. Questions relating to issue and publication fee payments should be directed to the Application Assistance Unit (AAU) of the Office of Data Management (ODM) at (571)-272-4200.

APPLICANT(s) (Please see PAIR WEB site http://pair.uspto.gov for additional applicants):

Radmond Vincent ARCETA, Manassas, VA;
Craig Kevin Rogers, Stephens City, VA;
Kevin Thomas Fitzpatrick, Winchester, VA;
Bryan Scott Ritchie, Clear Brook, VA;
Marin John Philpott, Winchester, VA;
Christina Louise Fortner, Stephens City, VA;

IR103 (Rev. 10/09)

UNITED STATES PATENT AND TRADEMARK OFFICE

UNITED STATES DEPARTMENT OF COMMERCE
United States Patent and Trademark Office
Address: COMMISSIONER FOR PATENTS
P.O. Box 1450
Alexandria, Virginia 22313-1450
www.uspto.gov

APPLICATION NO.	FILING DATE	FIRST NAMED INVENTOR	ATTORNEY DOCKET NO.	CONFIRMATION NO.
13/187,328	07/20/2011	Radmond Vincent ARCETA	086554-1553	6052

22428 7590 06/08/2012
FOLEY AND LARDNER LLP
SUITE 500
3000 K STREET NW
WASHINGTON, DC 20007

EXAMINER
VANAMAN, FRANK BENNETT

ART UNIT	PAPER NUMBER
3618	

MAIL DATE	DELIVERY MODE
06/08/2012	PAPER

Please find below and/or attached an Office communication concerning this application or proceeding.

The time period for reply, if any, is set in the attached communication.

PTOL-90A (Rev. 04/07)

Response to Rule 312 Communication	Application No.	Applicant(s)
	13187328	Radmond Vincent Arceta
	Examiner	Art Unit

-- The MAILING DATE of this communication appears on the cover sheet with the correspondence address --

1. ☒ The amendment filed on *06 June 2012* under 37 CFR 1.312 has been considered, and has been:

a) ☒ entered.

b) ☐ entered as directed to matters of form not affecting the scope of the invention.

c) ☐ disapproved because the amendment was filed after the payment of the issue fee.
Any amendment filed after the date the issue fee is paid must be accompanied by a petition under 37 CFR 1.313(c)(1) and the required fee to withdraw the application from issue.

d) ☐ disapproved. See explanation below.

e) ☐ entered in part. See explanation below.

/ Timothy Caldwell /

Publishing Division

IN THE UNITED STATES PATENT AND TRADEMARK OFFICE

Applicant:	Radmond ARCETA et al.
Title:	MEDICAL CART, MEDICATION MODULE, HEIGHT ADJUSTMENT MECHANISM, AND METHOD OF MEDICATION TRANSPORT
Appl. No.:	13/187,328
Filing Date:	7/20/2011
Examiner:	Frank Bennett Vanaman
Art Unit:	3618
Confirmation No.:	6052

AMENDMENT AND REPLY TO
NOTICE TO FILE CORRECTED APPLICATION PAPERS

Commissioner for Patents
P.O. Box 1450
Alexandria, VA 22313-1450

Commissioner:

This Amendment and Reply is being filed in response to the Notice to File Corrected Application Papers mailed on May 31, 2012 by the Office of Patent Publication.

Amendments to the Specification begin on page 2 of this document.

Remarks/Arguments begin on page 3 of this document.

Please amend the application as follows:

Amendments to the Specification:

Please amend the specification as follows:

Please replace paragraph 0042 with the following rewritten paragraph:

Figures 23 and 23A show ~~Figure 23 shows~~ a cross-sectional top view of the medication module of Figure 17 showing a portion of a keyless entry system, and an enlarged view of a portion thereof, respectively; and

Please replace paragraph 0082 with the following rewritten paragraph:

It is preferable to provide the user with the ability to lock the compartments 130, of the medication module 100. To reduce the likelihood of losing a key, to reduce the likelihood of having a key getting stuck (or worse broken) in a lock, and to eliminate the need for a separate lock for each compartment 130, the compartments may be lockable by a keyless entry system 600, as hereafter described with respect to Figures 22, 23, and [[23]] 23A.

REMARKS

This amendment is being filed after the payment of the issue fee, but in response to the Notice to File Corrected Application Papers mailed on May 31, 2012 issued by the Office of Patent Publication. A request of a waiver of 37 CFR 1.312, as permitted by 1280 Official Gazette Patent Office 918 (March 23, 2004) and entry of the foregoing amendment are respectfully requested. The amendment is required to respond to the Notice's indication that the specification should provide a brief description of Figure 23A.

It is believed that no fees are due in connection with this amendment. In the event this is not correct, the undersigned authorizes the Commissioner to charge Deposit Account No. 19-0741.

Respectfully submitted,

Date 6/6/2012

By Matthew J. Kremer

FOLEY & LARDNER LLP
Customer Number: 22428
Telephone: (202) 295-4075
Facsimile: (202) 672-5399

Matthew J. Kremer
Attorney for Applicant
Registration No. 58,671

Electronic Acknowledgement Receipt

EFS ID:	12951559
Application Number:	13187328
International Application Number:	
Confirmation Number:	6052
Title of Invention:	MEDICAL CART, MEDICATION MODULE, HEIGHT ADJUSTMENT MECHANISM, AND METHOD OF MEDICATION TRANSPORT
First Named Inventor/Applicant Name:	Radmond Vincent ARCETA
Customer Number:	22428
Filer:	Matthew J. Kremer
Filer Authorized By:	
Attorney Docket Number:	086554-1553
Receipt Date:	06-JUN-2012
Filing Date:	20-JUL-2011
Time Stamp:	17:18:37
Application Type:	Utility under 35 USC 111(a)

Payment information:

Submitted with Payment	no

File Listing:

Document Number	Document Description	File Name	File Size(Bytes)/ Message Digest	Multi Part /.zip	Pages (if appl.)
1	Miscellaneous Incoming Letter	Response.PDF	46255 5968872e39adddec9fe6d62675872587ade0f5ba	no	3

Warnings:

Information:

Total Files Size (in bytes):	46255

This Acknowledgement Receipt evidences receipt on the noted date by the USPTO of the indicated documents, characterized by the applicant, and including page counts, where applicable. It serves as evidence of receipt similar to a Post Card, as described in MPEP 503.

New Applications Under 35 U.S.C. 111
If a new application is being filed and the application includes the necessary components for a filing date (see 37 CFR 1.53(b)-(d) and MPEP 506), a Filing Receipt (37 CFR 1.54) will be issued in due course and the date shown on this Acknowledgement Receipt will establish the filing date of the application.

National Stage of an International Application under 35 U.S.C. 371
If a timely submission to enter the national stage of an international application is compliant with the conditions of 35 U.S.C. 371 and other applicable requirements a Form PCT/DO/EO/903 indicating acceptance of the application as a national stage submission under 35 U.S.C. 371 will be issued in addition to the Filing Receipt, in due course.

New International Application Filed with the USPTO as a Receiving Office
If a new international application is being filed and the international application includes the necessary components for an international filing date (see PCT Article 11 and MPEP 1810), a Notification of the International Application Number and of the International Filing Date (Form PCT/RO/105) will be issued in due course, subject to prescriptions concerning national security, and the date shown on this Acknowledgement Receipt will establish the international filing date of the application.

UNITED STATES PATENT AND TRADEMARK OFFICE

UNITED STATES DEPARTMENT OF COMMERCE
United States Patent and Trademark Office
Address: COMMISSIONER FOR PATENTS
P.O. Box 1450
Alexandria, Virginia 22313-1450
www.uspto.gov

APPLICATION NO.	FILING DATE	FIRST NAMED INVENTOR	ATTORNEY DOCKET NO.	CONFIRMATION NO.
13/187,328	07/20/2011	Radmond Vincent ARCETA	086554-1553	6052

22428 7590 05/31/2012
FOLEY AND LARDNER LLP
SUITE 500
3000 K STREET NW
WASHINGTON, DC 20007

EXAMINER
VANAMAN, FRANK BENNETT

ART UNIT	PAPER NUMBER
3618	

MAIL DATE	DELIVERY MODE
05/31/2012	PAPER

Please find below and/or attached an Office communication concerning this application or proceeding.

The time period for reply, if any, is set in the attached communication.

PTOL-90A (Rev. 04/07)

UNITED STATES PATENT AND TRADEMARK OFFICE

Commissioner for Patents
United States Patent and Trademark Office
P.O. Box 1450
Alexandria, VA 22313-1450
www.uspto.gov

Application No. : 13187328
Applicant : Arceta
Filing Date : 07/20/2011
Date Mailed : 05/31/2012

NOTICE TO FILE CORRECTED APPLICATION PAPERS

Notice of Allowance Mailed

This application has been accorded an Allowance Date and is being prepared for issuance. The application, however, is incomplete for the reasons below.

Applicant is given 2 month(s) from the mail date of this Notice, or the time remaining from the Notice of Allowance and Fee(s) Due, whichever is longer, within which to respond.

The informalities requiring correction are indicated in the attachment(s). If the informality pertains to the abstract, specification (including claims) or drawings, the informality must be corrected with an amendment in compliance with 37 CFR 1.121 (or, if the application is a reissue application, 37 CFR 1.173). Such an amendment may be filed after payment of the issue fee if limited to correction of informalities noted herein. See Waiver of 37 CFR 1.312 for Documents Required by the Office of Patent Publication, 1280 Off. Gaz. Patent Office 918 (March 23, 2004). In addition, if the informality is not corrected until after payment of the issue fee, for purposes of 35 U.S.C. 154(b)(1)(iv), "all outstanding requirements" will be considered to have been satisfied when the informality has been corrected. A failure to respond within the above-identified time period will result in the application being ABANDONED. **This period for reply is NOT extendable under 37 CFR 1.136(a).**

See attachment(s).

A copy of this notice MUST be returned with the reply. Please address response to "Mail Stop Issue Fee,Commissioner for Patents, P.O. Box 1450, Alexandria, VA 22313-1450".

/Tamika Tolbert/
Publication Branch
Office of Data Management
(571) 272-4200

Application No. 13187328

IDENTIFICATION OF SPECIFICATION/DRAWING INCONSISTENCIES

☐ On Page of the specification there is a brief description of FIG. , but the drawings filed do not include a drawing with that designation. Applicant must respond either by supplying the omitted drawing or by amending the specification to remove all references to that drawing.

☒ The drawings filed 07/20/2011 include FIG. 23A, but the specification's brief description of the drawings does not describe a drawing with that designation. Applicant must respond either by amending the specification to add a brief description of that drawing or by correcting the drawings to remove the drawing in question.

☐ Drawings are present in the application and are referred to in the detailed description of the invention, but the specification does not contain a brief description of the drawings as required by 37 CFR 1.74 and 37 CFR 1.77(b)(8).

☐ Page of the specification refers to FIG. , but no drawing with that designation is described in the brief description of the drawings and no drawing with that designation is present in the application. Applicant must respond either by amending the specification to remove all references to that drawing, or by supplying that drawing and amending the specification to add a brief description of it.

☐ OTHER:

☐ COMMENTS:

UNITED STATES PATENT AND TRADEMARK OFFICE

UNITED STATES DEPARTMENT OF COMMERCE
United States Patent and Trademark Office
Address: COMMISSIONER FOR PATENTS
P.O. Box 1450
Alexandria, Virginia 22313-1450
www.uspto.gov

APPLICATION NUMBER	FILING or 371(c) DATE	GRP ART UNIT	FIL FEE REC'D	ATTY.DOCKET.NO	TOT CLAIMS	IND CLAIMS
13/187,328	07/20/2011	3618	1598	086554-1553	24	3

CONFIRMATION NO. 6052

CORRECTED FILING RECEIPT

22428
FOLEY AND LARDNER LLP
SUITE 500
3000 K STREET NW
WASHINGTON, DC 20007

OC000000054442887

Date Mailed: 05/23/2012

Receipt is acknowledged of this non-provisional patent application. The application will be taken up for examination in due course. Applicant will be notified as to the results of the examination. Any correspondence concerning the application must include the following identification information: the U.S. APPLICATION NUMBER, FILING DATE, NAME OF APPLICANT, and TITLE OF INVENTION. Fees transmitted by check or draft are subject to collection. Please verify the accuracy of the data presented on this receipt. **If an error is noted on this Filing Receipt, please submit a written request for a Filing Receipt Correction. Please provide a copy of this Filing Receipt with the changes noted thereon. If you received a "Notice to File Missing Parts" for this application, please submit any corrections to this Filing Receipt with your reply to the Notice. When the USPTO processes the reply to the Notice, the USPTO will generate another Filing Receipt incorporating the requested corrections**

Applicant(s)

Radmond Vincent ARCETA, Manassas, VA;
Craig Kevin Rogers, Stephens City, VA;
Kevin Thomas Fitzpatrick, Winchester, VA;
Bryan Scott Ritchie, Clear Brook, VA;
Marin John Philpott, Winchester, VA;
Christina Louise Fortner, Stephens City, VA;

Assignment For Published Patent Application

Rubbermaid Incorporated

Power of Attorney: The patent practitioners associated with Customer Number 22428

Domestic Priority data as claimed by applicant

This application is a CON of 12/550,771 08/31/2009 ABN
which is a DIV of 12/193,346 08/18/2008 PAT 7594668
which is a CON of 10/783,030 02/23/2004 ABN
which is a CIP of 29/196,712 01/02/2004 PAT D515767
and is a CIP of 29/196,713 01/02/2004 PAT D518267
and is a CIP of 29/196,714 01/02/2004 PAT D517768
and claims benefit of 60/448,920 02/24/2003
and claims benefit of 60/484,658 07/07/2003
and claims benefit of 60/518,649 11/12/2003
and claims benefit of 60/532,900 12/30/2003

Foreign Applications (You may be eligible to benefit from the **Patent Prosecution Highway** program at the USPTO. Please see http://www.uspto.gov for more information.)

If Required, Foreign Filing License Granted: 07/29/2011

The country code and number of your priority application, to be used for filing abroad under the Paris Convention, is **US 13/187,328**

Projected Publication Date: Not Applicable

Non-Publication Request: No

Early Publication Request: No

Title

MEDICAL CART, MEDICATION MODULE, HEIGHT ADJUSTMENT MECHANISM, AND METHOD OF MEDICATION TRANSPORT

Preliminary Class

280

PROTECTING YOUR INVENTION OUTSIDE THE UNITED STATES

Since the rights granted by a U.S. patent extend only throughout the territory of the United States and have no effect in a foreign country, an inventor who wishes patent protection in another country must apply for a patent in a specific country or in regional patent offices. Applicants may wish to consider the filing of an international application under the Patent Cooperation Treaty (PCT). An international (PCT) application generally has the same effect as a regular national patent application in each PCT-member country. The PCT process **simplifies** the filing of patent applications on the same invention in member countries, but **does not result** in a grant of "an international patent" and does not eliminate the need of applicants to file additional documents and fees in countries where patent protection is desired.

Almost every country has its own patent law, and a person desiring a patent in a particular country must make an application for patent in that country in accordance with its particular laws. Since the laws of many countries differ in various respects from the patent law of the United States, applicants are advised to seek guidance from specific foreign countries to ensure that patent rights are not lost prematurely.

Applicants also are advised that in the case of inventions made in the United States, the Director of the USPTO must issue a license before applicants can apply for a patent in a foreign country. The filing of a U.S. patent application serves as a request for a foreign filing license. The application's filing receipt contains further information and guidance as to the status of applicant's license for foreign filing.

Applicants may wish to consult the USPTO booklet, "General Information Concerning Patents" (specifically, the section entitled "Treaties and Foreign Patents") for more information on timeframes and deadlines for filing foreign patent applications. The guide is available either by contacting the USPTO Contact Center at 800-786-9199, or it can be viewed on the USPTO website at http://www.uspto.gov/web/offices/pac/doc/general/index.html.

For information on preventing theft of your intellectual property (patents, trademarks and copyrights), you may wish to consult the U.S. Government website, http://www.stopfakes.gov. Part of a Department of Commerce initiative, this website includes self-help "toolkits" giving innovators guidance on how to protect intellectual property in specific countries such as China, Korea and Mexico. For questions regarding patent enforcement issues, applicants may call the U.S. Government hotline at 1-866-999-HALT (1-866-999-4158).

LICENSE FOR FOREIGN FILING UNDER

Title 35, United States Code, Section 184

Title 37, Code of Federal Regulations, 5.11 & 5.15

GRANTED

The applicant has been granted a license under 35 U.S.C. 184, if the phrase "IF REQUIRED, FOREIGN FILING LICENSE GRANTED" followed by a date appears on this form. Such licenses are issued in all applications where the conditions for issuance of a license have been met, regardless of whether or not a license may be required as set forth in 37 CFR 5.15. The scope and limitations of this license are set forth in 37 CFR 5.15(a) unless an earlier license has been issued under 37 CFR 5.15(b). The license is subject to revocation upon written notification. The date indicated is the effective date of the license, unless an earlier license of similar scope has been granted under 37 CFR 5.13 or 5.14.

This license is to be retained by the licensee and may be used at any time on or after the effective date thereof unless it is revoked. This license is automatically transferred to any related applications(s) filed under 37 CFR 1.53(d). This license is not retroactive.

The grant of a license does not in any way lessen the responsibility of a licensee for the security of the subject matter as imposed by any Government contract or the provisions of existing laws relating to espionage and the national security or the export of technical data. Licensees should apprise themselves of current regulations especially with respect to certain countries, of other agencies, particularly the Office of Defense Trade Controls, Department of State (with respect to Arms, Munitions and Implements of War (22 CFR 121-128)); the Bureau of Industry and Security, Department of Commerce (15 CFR parts 730-774); the Office of Foreign AssetsControl, Department of Treasury (31 CFR Parts 500+) and the Department of Energy.

NOT GRANTED

No license under 35 U.S.C. 184 has been granted at this time, if the phrase "IF REQUIRED, FOREIGN FILING LICENSE GRANTED" DOES NOT appear on this form. Applicant may still petition for a license under 37 CFR 5.12, if a license is desired before the expiration of 6 months from the filing date of the application. If 6 months has lapsed from the filing date of this application and the licensee has not received any indication of a secrecy order under 35 U.S.C. 181, the licensee may foreign file the application pursuant to 37 CFR 5.15(b).

SelectUSA

The United States represents the largest, most dynamic marketplace in the world and is an unparalleled location for business investment, innovation and commercialization of new technologies. The USA offers tremendous resources and advantages for those who invest and manufacture goods here. Through SelectUSA, our nation works to encourage, facilitate, and accelerate business investment. To learn more about why the USA is the best country in the world to develop technology, manufacture products, and grow your business, visit SelectUSA.gov.

PART B - FEE(S) TRANSMITTAL

Complete and send this form, together with applicable fee(s), to: Mail **Mail Stop ISSUE FEE**
Commissioner for Patents
P.O. Box 1450
Alexandria, Virginia 22313-1450
or Fax (571)-273-2885

INSTRUCTIONS: This form should be used for transmitting the ISSUE FEE and PUBLICATION FEE (if required). Blocks 1 through 5 should be completed where appropriate. All further correspondence including the Patent, advance orders and notification of maintenance fees will be mailed to the current correspondence address as indicated unless corrected below or directed otherwise in Block 1, by (a) specifying a new correspondence address; and/or (b) indicating a separate "FEE ADDRESS" for maintenance fee notifications.

CURRENT CORRESPONDENCE ADDRESS (Note: Use Block 1 for any change of address)

22428 7590 05/14/2012
FOLEY AND LARDNER LLP
SUITE 500
3000 K STREET NW
WASHINGTON, DC 20007

Note: A certificate of mailing can only be used for domestic mailings of the Fee(s) Transmittal. This certificate cannot be used for any other accompanying papers. Each additional paper, such as an assignment or formal drawing, must have its own certificate of mailing or transmission.

Certificate of Mailing or Transmission

I hereby certify that this Fee(s) Transmittal is being deposited with the United States Postal Service with sufficient postage for first class mail in an envelope addressed to the Mail Stop ISSUE FEE address above, or being facsimile transmitted to the USPTO (571) 273-2885, on the date indicated below.

(Depositor's name)
(Signature)
(Date)

APPLICATION NO.	FILING DATE	FIRST NAMED INVENTOR	ATTORNEY DOCKET NO.	CONFIRMATION NO.
13/187,328	07/20/2011	Radmond Vincent ARCETA	086554-1553	6052

TITLE OF INVENTION: MEDICAL CART, MEDICATION MODULE, HEIGHT ADJUSTMENT MECHANISM, AND METHOD OF MEDICATION TRANSPORT

APPLN. TYPE	SMALL ENTITY	ISSUE FEE DUE	PUBLICATION FEE DUE	PREV. PAID ISSUE FEE	TOTAL FEE(S) DUE	DATE DUE
nonprovisional	NO	$1740	$300	$0	$2040	08/14/2012

EXAMINER	ART UNIT	CLASS-SUBCLASS
VANAMAN, FRANK BENNETT	3618	280-047350

1. Change of correspondence address or indication of "Fee Address" (37 CFR 1.363).
- ☐ Change of correspondence address (or Change of Correspondence Address form PTO/SB/122) attached.
- ☐ "Fee Address" indication (or "Fee Address" Indication form PTO/SB/47; Rev 03-02 or more recent) attached. **Use of a Customer Number is required.**

2. For printing on the patent front page, list
(1) the names of up to 3 registered patent attorneys or agents OR, alternatively,
(2) the name of a single firm (having as a member a registered attorney or agent) and the names of up to 2 registered patent attorneys or agents. If no name is listed, no name will be printed.

1 Foley & Lardner LLP
2
3

3. ASSIGNEE NAME AND RESIDENCE DATA TO BE PRINTED ON THE PATENT (print or type)

PLEASE NOTE: Unless an assignee is identified below, no assignee data will appear on the patent. If an assignee is identified below, the document has been filed for recordation as set forth in 37 CFR 3.11. Completion of this form is NOT a substitute for filing an assignment.

(A) NAME OF ASSIGNEE: Rubbermaid Incorporated
(B) RESIDENCE: (CITY and STATE OR COUNTRY): Huntersville, North Carolina

Please check the appropriate assignee category or categories (will not be printed on the patent): ☐ Individual ☒ Corporation or other private group entity ☐ Government

4a. The following fee(s) are submitted:
- ☒ Issue Fee
- ☒ Publication Fee (No small entity discount permitted)
- ☐ Advance Order - # of Copies

4b. Payment of Fee(s): **(Please first reapply any previously paid issue fee shown above)**
- ☐ A check is enclosed.
- ☒ Payment by credit card. Form PTO-2038 is attached.
- ☒ The Director is hereby authorized to charge the required fee(s), any deficiency, or credit any overpayment, to Deposit Account Number 19-0741 (enclose an extra copy of this form).

5. **Change in Entity Status** (from status indicated above)
- ☐ a. Applicant claims SMALL ENTITY status. See 37 CFR 1.27.
- ☐ b. Applicant is no longer claiming SMALL ENTITY status. See 37 CFR 1.27(g)(2).

NOTE: The Issue Fee and Publication Fee (if required) will not be accepted from anyone other than the applicant; a registered attorney or agent; or the assignee or other party in interest as shown by the records of the United States Patent and Trademark Office.

Authorized Signature _____ Date May 21, 2012

Typed or printed name Andrew E. Rawlins Registration No. 34,702

This collection of information is required by 37 CFR 1.311. The information is required to obtain or retain a benefit by the public which is to file (and by the USPTO to process) an application. Confidentiality is governed by 35 U.S.C. 122 and 37 CFR 1.14. This collection is estimated to take 12 minutes to complete, including gathering, preparing, and submitting the completed application form to the USPTO. Time will vary depending upon the individual case. Any comments on the amount of time you require to complete this form and/or suggestions for reducing this burden, should be sent to the Chief Information Officer, U.S. Patent and Trademark Office, U.S. Department of Commerce, P.O. Box 1450, Alexandria, Virginia 22313-1450. DO NOT SEND FEES OR COMPLETED FORMS TO THIS ADDRESS. SEND TO: Commissioner for Patents, P.O. Box 1450, Alexandria, Virginia 22313-1450.

Under the Paperwork Reduction Act of 1995, no persons are required to respond to a collection of information unless it displays a valid OMB control number.

IN THE UNITED STATES PATENT AND TRADEMARK OFFICE

Applicants:	Radmond ARCETA et al.
Title:	MEDICAL CART, MEDICATION MODULE, HEIGHT ADJUSTMENT MECHANISM, AND METHOD OF MEDICATION TRANSPORT
Appl. No.:	13/187,328
Filing Date:	7/20/2011
Examiner:	Frank Bennett Vanaman
Art Unit:	3618
Confirmation No.:	6052

COMMENTS ON NOTICE OF ALLOWANCE

Commissioner for Patents
P.O. Box 1450
Alexandria, VA 22313-1450

Commissioner:

Applicants thank the Examiner for the Notice of Allowance issued on May 14, 2012. It is noted that the rejection of claims 1-5, 9-11, 13-16, 18, and 23-24 on the ground of nonstatutory obviousness-type double patenting as being unpatentable over claims 1-7 of U.S. Patent 7,594,668 was not mentioned in the Notice of Allowance or any other communication issued by the U.S. Patent and Trademark Office. Therefore, Applicants believe that this double patenting rejection was withdrawn in view of the claim amendments filed in the Reply on March 28, 2012 and there is no need to file a terminal disclaimer. Accordingly, no terminal disclaimer has been filed.

Respectfully submitted,

Date 5/21/2012

By Matthew J. Kremer

FOLEY & LARDNER LLP
Customer Number: 22428
Telephone: (202) 295-4075
Facsimile: (202) 672-5399

Matthew J. Kremer
Attorney for Applicants
Registration No. 58,671

Atty. Dkt. No. 086554-1553

IN THE UNITED STATES PATENT AND TRADEMARK OFFICE

Applicant:	Radmond ARCETA et al.
Title:	MEDICAL CART, MEDICATION MODULE, HEIGHT ADJUSTMENT MECHANISM, AND METHOD OF MEDICATION TRANSPORT
Appl. No.:	13/187,328
Filing Date:	7/20/2011
Examiner:	Frank Bennett Vanaman
Art Unit:	3618
Confirmation Number:	6052

REQUEST FOR CORRECTED FILING RECEIPT

Commissioner for Patents
P.O. Box 1450
Alexandria, VA 22313-1450

Attn: Appl. Processing Division, Customer Correction Branch

Sir:

Attached is a copy of the official Filing Receipt received from the PTO in the above-referenced application.

There is an error with respect to the Domestic Priority Data As Claimed By Applicant as follows:

Please add – which is a Continuation in Part of 29/196,712 01/02/2004

and which is a Continuation in Part of 29/196,713 01/02/2004

and which is a Continuation in Part of 29/196,714 01/02/2004 --.

4826-5269-3007.1

The correction is not due to any error by Applicant and, accordingly, no fee is due. Issuance of a corrected Filing Receipt is respectfully requested.

Respectfully submitted,

Date May 21, 2012

By

FOLEY & LARDNER LLP
Customer Number: 22428
Telephone: (202) 672-5349
Facsimile: (202) 672-5399

Andrew E. Rawlins
Attorney for Applicant
Registration No. 34,702

UNITED STATES PATENT AND TRADEMARK OFFICE

UNITED STATES DEPARTMENT OF COMMERCE
United States Patent and Trademark Office
Address: COMMISSIONER FOR PATENTS
P.O. Box 1450
Alexandria, Virginia 22313-1450
www.uspto.gov

APPLICATION NUMBER	FILING or 371(c) DATE	GRP ART UNIT	FIL FEE REC'D	ATTY.DOCKET.NO	TOT CLAIMS	IND CLAIMS
13/187,328	07/20/2011	3651	1298	086554-1553	24	3

CONFIRMATION NO. 6052

22428
FOLEY AND LARDNER LLP
SUITE 500
3000 K STREET NW
WASHINGTON, DC 20007

FILING RECEIPT

OC000000049048120

Date Mailed: 08/02/2011

- CORRECTED -

Receipt is acknowledged of this non-provisional patent application. The application will be taken up for examination in due course. Applicant will be notified as to the results of the examination. Any correspondence concerning the application must include the following identification information: the U.S. APPLICATION NUMBER, FILING DATE, NAME OF APPLICANT, and TITLE OF INVENTION. Fees transmitted by check or draft are subject to collection. Please verify the accuracy of the data presented on this receipt. **If an error is noted on this Filing Receipt, please submit a written request for a Filing Receipt Correction. Please provide a copy of this Filing Receipt with the changes noted thereon. If you received a "Notice to File Missing Parts" for this application, please submit any corrections to this Filing Receipt with your reply to the Notice. When the USPTO processes the reply to the Notice, the USPTO will generate another Filing Receipt incorporating the requested corrections**

Applicant(s)

Radmond Vincent ARCETA, Manassas, VA;
Craig Kevin Rogers, Stephens City, VA;
Kevin Thomas Fitzpatrick, Winchester, VA;
Bryan Scott Ritchie, Clear Brook, VA;
Marin John Philpott, Winchester, VA;
Christina Louise Fortner, Stephens City, VA;

Assignment For Published Patent Application

Rubbermaid Incorporated

Power of Attorney: The patent practitioners associated with Customer Number 22428

Domestic Priority data as claimed by applicant

This application is a CON of 12/550,771 08/31/2009
which is a DIV of 12/193,346 08/18/2008 PAT 7,594,668
which is a CON of 10/783,030 02/23/2004 ABN
which is a Continuation in Part of 29/196,712 01/02/2004
and which is a Continuation in Part of 29/196,713 01/02/2004
and which is a Continuation in Part of 29/196,714 01/02/2004
which claims benefit of 60/448,920 02/24/2003
and claims benefit of 60/484,658 07/07/2003
and claims benefit of 60/518,649 11/12/2003
and claims benefit of 60/532,900 12/30/2003

Foreign Applications (You may be eligible to benefit from the **Patent Prosecution Highway** program at the USPTO. Please see http://www.uspto.gov for more information.)

If Required, Foreign Filing License Granted: 07/29/2011

The country code and number of your priority application, to be used for filing abroad under the Paris Convention, is **US 13/187,328**

Projected Publication Date: 11/10/2011

Non-Publication Request: No

Early Publication Request: No
Title

MEDICAL CART, MEDICATION MODULE, HEIGHT ADJUSTMENT MECHANISM, AND METHOD OF MEDICATION TRANSPORT

Preliminary Class

700

PROTECTING YOUR INVENTION OUTSIDE THE UNITED STATES

Since the rights granted by a U.S. patent extend only throughout the territory of the United States and have no effect in a foreign country, an inventor who wishes patent protection in another country must apply for a patent in a specific country or in regional patent offices. Applicants may wish to consider the filing of an international application under the Patent Cooperation Treaty (PCT). An international (PCT) application generally has the same effect as a regular national patent application in each PCT-member country. The PCT process **simplifies** the filing of patent applications on the same invention in member countries, but **does not result** in a grant of "an international patent" and does not eliminate the need of applicants to file additional documents and fees in countries where patent protection is desired.

Almost every country has its own patent law, and a person desiring a patent in a particular country must make an application for patent in that country in accordance with its particular laws. Since the laws of many countries differ in various respects from the patent law of the United States, applicants are advised to seek guidance from specific foreign countries to ensure that patent rights are not lost prematurely.

Applicants also are advised that in the case of inventions made in the United States, the Director of the USPTO must issue a license before applicants can apply for a patent in a foreign country. The filing of a U.S. patent application serves as a request for a foreign filing license. The application's filing receipt contains further information and guidance as to the status of applicant's license for foreign filing.

Applicants may wish to consult the USPTO booklet, "General Information Concerning Patents" (specifically, the section entitled "Treaties and Foreign Patents") for more information on timeframes and deadlines for filing foreign patent applications. The guide is available either by contacting the USPTO Contact Center at 800-786-9199, or it can be viewed on the USPTO website at http://www.uspto.gov/web/offices/pac/doc/general/index.html.

For information on preventing theft of your intellectual property (patents, trademarks and copyrights), you may wish to consult the U.S. Government website, http://www.stopfakes.gov. Part of a Department of Commerce initiative, this website includes self-help "toolkits" giving innovators guidance on how to protect intellectual property in specific countries such as China, Korea and Mexico. For questions regarding patent enforcement issues, applicants may call the U.S. Government hotline at 1-866-999-HALT (1-866-999-4158).

LICENSE FOR FOREIGN FILING UNDER

Title 35, United States Code, Section 184

Title 37, Code of Federal Regulations, 5.11 & 5.15

GRANTED

The applicant has been granted a license under 35 U.S.C. 184, if the phrase "IF REQUIRED, FOREIGN FILING LICENSE GRANTED" followed by a date appears on this form. Such licenses are issued in all applications where the conditions for issuance of a license have been met, regardless of whether or not a license may be required as set forth in 37 CFR 5.15. The scope and limitations of this license are set forth in 37 CFR 5.15(a) unless an earlier license has been issued under 37 CFR 5.15(b). The license is subject to revocation upon written notification. The date indicated is the effective date of the license, unless an earlier license of similar scope has been granted under 37 CFR 5.13 or 5.14.

This license is to be retained by the licensee and may be used at any time on or after the effective date thereof unless it is revoked. This license is automatically transferred to any related applications(s) filed under 37 CFR 1.53(d). This license is not retroactive.

The grant of a license does not in any way lessen the responsibility of a licensee for the security of the subject matter as imposed by any Government contract or the provisions of existing laws relating to espionage and the national security or the export of technical data. Licensees should apprise themselves of current regulations especially with respect to certain countries, of other agencies, particularly the Office of Defense Trade Controls, Department of State (with respect to Arms, Munitions and Implements of War (22 CFR 121-128)); the Bureau of Industry and Security, Department of Commerce (15 CFR parts 730-774); the Office of Foreign AssetsControl, Department of Treasury (31 CFR Parts 500+) and the Department of Energy.

NOT GRANTED

No license under 35 U.S.C. 184 has been granted at this time, if the phrase "IF REQUIRED, FOREIGN FILING LICENSE GRANTED" DOES NOT appear on this form. Applicant may still petition for a license under 37 CFR 5.12, if a license is desired before the expiration of 6 months from the filing date of the application. If 6 months has lapsed from the filing date of this application and the licensee has not received any indication of a secrecy order under 35 U.S.C. 181, the licensee may foreign file the application pursuant to 37 CFR 5.15(b).

Supplemental Application Data Sheet

Application Information

Application Number::	**13/187,328**
Filing Date::	**7/20/2011**
Application Type::	Regular
Subject Matter::	Utility
Suggested classification::	
Suggested Group Art Unit::	3618
CD-ROM or CD-R?::	None
Computer Readable Form (CRF)?::	No
Title::	MEDICAL CART, MEDICATION MODULE, HEIGHT ADJUSTMENT MECHANISM, AND METHOD OF MEDICATION TRANSPORT
Attorney Docket Number::	086554-1553
Request for Early Publication?::	No
Request for Non-Publication?::	No
Suggested Drawing Figure::	1
Total Drawing Sheets::	20
Small Entity?::	No
Petition included?::	No
Secrecy Order in Parent Appl.?::	No

Applicant Information

Applicant Authority Type::	Inventor
Primary Citizenship Country::	US
Status::	Full Capacity
Given Name::	Radmond Vincent
Family Name::	ARCETA
City of Residence::	Manassas

State or Province of Residence::	VA
Country of Residence::	US
Street of mailing address::	10503 Lariat Lane, Apt. 12
City of mailing address::	Manassas
State or Province of mailing address::	VA
Postal or Zip Code of mailing address::	20109

Applicant Authority Type::	Inventor
Primary Citizenship Country::	US
Status::	Full Capacity
Given Name::	Craig Kevin
Family Name::	ROGERS
City of Residence::	Stephens City
State or Province of Residence::	VA
Country of Residence::	US
Street of mailing address::	102 Lariat Court
City of mailing address::	Stephens City
State or Province of mailing address::	VA
Postal or Zip Code of mailing address::	22655

Applicant Authority Type::	Inventor
Primary Citizenship Country::	US
Status::	Full Capacity
Given Name::	Kevin Thomas
Family Name::	FITZPATRICK
City of Residence::	Winchester
State or Province of Residence::	VA

Country of Residence::	US
Street of mailing address::	325 George Street
City of mailing address::	Winchester
State or Province of mailing address::	VA
Postal or Zip Code of mailing address::	22601

Applicant Authority Type::	Inventor
Primary Citizenship Country::	US
Status::	Full Capacity
Given Name::	Bryan Scott
Family Name::	RITCHIE
City of Residence::	Clear Brook
State or Province of Residence::	VA
Country of Residence::	US
Street of mailing address::	779 Ruebuck Road
City of mailing address::	Clear Brook
State or Province of mailing address::	VA
Postal or Zip Code of mailing address::	22624

Applicant Authority Type::	Inventor
Primary Citizenship Country::	US
Status::	Full Capacity
Given Name::	Marin John
Family Name::	PHILPOTT
City of Residence::	Winchester
State or Province of Residence::	VA
Country of Residence::	US
Street of mailing address::	611 Manito Trail

City of mailing address::	Winchester
State or Province of mailing address::	VA
Postal or Zip Code of mailing address::	22602

Applicant Authority Type::	Inventor
Primary Citizenship Country::	US
Status::	Full Capacity
Given Name::	Christina Louise
Family Name::	FORTNER
City of Residence::	Stephens City
State or Province of Residence::	VA
Country of Residence::	US
Street of mailing address::	151 Lexington Court
City of mailing address::	Stephens City
State or Province of mailing address::	VA
Postal or Zip Code of mailing address::	22655

Correspondence Information

Correspondence Customer Number::	22428
E-Mail address::	PTOMailWashington@foley.com

Representative Information

Representative Customer Number::	22428	

Domestic Priority Information

Application::	Continuity Type::	Parent Application::	Parent Filing Date::
This Application	Continuation of	12/550,771	8/31/2009
12/550,771	Division of	12/193,346	8/18/2008
12/193,346	Continuation of	10/783,030	2/23/2004
10/783,030	**Continuation In Part of**	29/196,714	1/2/2004
10/783,030	**Continuation In Part of**	29/196,713	1/2/2004
10/783,030	**Continuation In Part of**	29/196,712	1/2/2004
10/783,030	An application claiming the benefit under 35 USC 119(e)	60/448,920	2/24/2003
10/783,030	An application claiming the benefit under 35 USC 119(e)	60/484,658	7/7/2003
10/783,030	An application claiming the benefit under 35 USC 119(e)	60/518,649	11/12/2003
10/783,030	An application claiming the benefit under 35 USC 119(e)	60/532,900	12/30/2003

Foreign Priority Information

Country::	Application number::	Filing Date::	Priority Claimed::

Assignee Information

Assignee Name:: Rubbermaid Incorporated

Electronic Patent Application Fee Transmittal

Application Number:	13187328
Filing Date:	20-Jul-2011
Title of Invention:	MEDICAL CART, MEDICATION MODULE, HEIGHT ADJUSTMENT MECHANISM, AND METHOD OF MEDICATION TRANSPORT
First Named Inventor/Applicant Name:	Radmond Vincent ARCETA
Filer:	Andrew E. Rawlins./Kimberley Cox-Baione
Attorney Docket Number:	086554-1553

Filed as Large Entity

Utility under 35 USC 111(a) Filing Fees

Description	Fee Code	Quantity	Amount	Sub-Total in USD($)
Basic Filing:				
Pages:				
Claims:				
Miscellaneous-Filing:				
Petition:				
Patent-Appeals-and-Interference:				
Post-Allowance-and-Post-Issuance:				
Utility Appl issue fee	1501	1	1740	1740
Publ. Fee- early, voluntary, or normal	1504	1	300	300

Description	Fee Code	Quantity	Amount	Sub-Total in USD($)
Extension-of-Time:				
Miscellaneous:				
		Total in USD ($)		**2040**

Electronic Acknowledgement Receipt

EFS ID:	12826477
Application Number:	13187328
International Application Number:	
Confirmation Number:	6052
Title of Invention:	MEDICAL CART, MEDICATION MODULE, HEIGHT ADJUSTMENT MECHANISM, AND METHOD OF MEDICATION TRANSPORT
First Named Inventor/Applicant Name:	Radmond Vincent ARCETA
Customer Number:	22428
Filer:	Andrew E. Rawlins./Kimberley Cox-Baione
Filer Authorized By:	Andrew E. Rawlins.
Attorney Docket Number:	086554-1553
Receipt Date:	21-MAY-2012
Filing Date:	20-JUL-2011
Time Stamp:	16:52:11
Application Type:	Utility under 35 USC 111(a)

Payment information:

Submitted with Payment	yes
Payment Type	Credit Card
Payment was successfully received in RAM	$2040
RAM confirmation Number	4031
Deposit Account	
Authorized User	

File Listing:

Document Number	Document Description	File Name	File Size(Bytes)/ Message Digest	Multi Part /.zip	Pages (if appl.)

1	Issue Fee Payment (PTO-85B)	IssueandPubTrans.pdf	148611 b41002dd7a84807d5601d9e99585fe802a192833	no	1
Warnings:					
Information:					
2	Miscellaneous Incoming Letter	CommentsOnNOAL.pdf	45026 35a52326f5139dd415979a2287622885025 04cfb	no	1
Warnings:					
Information:					
3	Request for Corrected Filing Receipt	CORRECTEDOfficialFilingReceiptSecondSubmission.pdf	259415 0a6be18bc13a69b5db89df67b020419177b9a159	no	5
Warnings:					
Information:					
4	Application Data Sheet	SupplementalApplicationDataSheet.pdf	60354 874b9334b048db6d42ff9fc4fa6531a357928bc4	no	6
Warnings:					
Information:					
This is not an USPTO supplied ADS fillable form					
5	Fee Worksheet (SB06)	fee-info.pdf	32236 934794c06a8f71f73a97d57d508308183dd5aaa7	no	2
Warnings:					
Information:					
		Total Files Size (in bytes):	545642		

This Acknowledgement Receipt evidences receipt on the noted date by the USPTO of the indicated documents, characterized by the applicant, and including page counts, where applicable. It serves as evidence of receipt similar to a Post Card, as described in MPEP 503.

<u>New Applications Under 35 U.S.C. 111</u>
If a new application is being filed and the application includes the necessary components for a filing date (see 37 CFR 1.53(b)-(d) and MPEP 506), a Filing Receipt (37 CFR 1.54) will be issued in due course and the date shown on this Acknowledgement Receipt will establish the filing date of the application.

<u>National Stage of an International Application under 35 U.S.C. 371</u>
If a timely submission to enter the national stage of an international application is compliant with the conditions of 35 U.S.C. 371 and other applicable requirements a Form PCT/DO/EO/903 indicating acceptance of the application as a national stage submission under 35 U.S.C. 371 will be issued in addition to the Filing Receipt, in due course.

<u>New International Application Filed with the USPTO as a Receiving Office</u>
If a new international application is being filed and the international application includes the necessary components for an international filing date (see PCT Article 11 and MPEP 1810), a Notification of the International Application Number and of the International Filing Date (Form PCT/RO/105) will be issued in due course, subject to prescriptions concerning national security, and the date shown on this Acknowledgement Receipt will establish the international filing date of the application.

UNITED STATES PATENT AND TRADEMARK OFFICE

UNITED STATES DEPARTMENT OF COMMERCE
United States Patent and Trademark Office
Address: COMMISSIONER FOR PATENTS
P.O. Box 1450
Alexandria, Virginia 22313-1450
www.uspto.gov

NOTICE OF ALLOWANCE AND FEE(S) DUE

22428 7590 05/14/2012
FOLEY AND LARDNER LLP
SUITE 500
3000 K STREET NW
WASHINGTON, DC 20007

EXAMINER
VANAMAN, FRANK BENNETT

ART UNIT	PAPER NUMBER
3618	

DATE MAILED: 05/14/2012

APPLICATION NO.	FILING DATE	FIRST NAMED INVENTOR	ATTORNEY DOCKET NO.	CONFIRMATION NO.
13/187,328	07/20/2011	Radmond Vincent ARCETA	086554-1553	6052

TITLE OF INVENTION: MEDICAL CART, MEDICATION MODULE, HEIGHT ADJUSTMENT MECHANISM, AND METHOD OF MEDICATION TRANSPORT

APPLN. TYPE	SMALL ENTITY	ISSUE FEE DUE	PUBLICATION FEE DUE	PREV. PAID ISSUE FEE	TOTAL FEE(S) DUE	DATE DUE
nonprovisional	NO	$1740	$300	$0	$2040	08/14/2012

THE APPLICATION IDENTIFIED ABOVE HAS BEEN EXAMINED AND IS ALLOWED FOR ISSUANCE AS A PATENT. PROSECUTION ON THE MERITS IS CLOSED. THIS NOTICE OF ALLOWANCE IS NOT A GRANT OF PATENT RIGHTS. THIS APPLICATION IS SUBJECT TO WITHDRAWAL FROM ISSUE AT THE INITIATIVE OF THE OFFICE OR UPON PETITION BY THE APPLICANT. SEE 37 CFR 1.313 AND MPEP 1308.

THE ISSUE FEE AND PUBLICATION FEE (IF REQUIRED) MUST BE PAID WITHIN THREE MONTHS FROM THE MAILING DATE OF THIS NOTICE OR THIS APPLICATION SHALL BE REGARDED AS ABANDONED. THIS STATUTORY PERIOD CANNOT BE EXTENDED. SEE 35 U.S.C. 151. THE ISSUE FEE DUE INDICATED ABOVE DOES NOT REFLECT A CREDIT FOR ANY PREVIOUSLY PAID ISSUE FEE IN THIS APPLICATION. IF AN ISSUE FEE HAS PREVIOUSLY BEEN PAID IN THIS APPLICATION (AS SHOWN ABOVE), THE RETURN OF PART B OF THIS FORM WILL BE CONSIDERED A REQUEST TO REAPPLY THE PREVIOUSLY PAID ISSUE FEE TOWARD THE ISSUE FEE NOW DUE.

HOW TO REPLY TO THIS NOTICE:

I. Review the SMALL ENTITY status shown above.

If the SMALL ENTITY is shown as YES, verify your current SMALL ENTITY status:

A. If the status is the same, pay the TOTAL FEE(S) DUE shown above.

B. If the status above is to be removed, check box 5b on Part B - Fee(s) Transmittal and pay the PUBLICATION FEE (if required) and twice the amount of the ISSUE FEE shown above, or

If the SMALL ENTITY is shown as NO:

A. Pay TOTAL FEE(S) DUE shown above, or

B. If applicant claimed SMALL ENTITY status before, or is now claiming SMALL ENTITY status, check box 5a on Part B - Fee(s) Transmittal and pay the PUBLICATION FEE (if required) and 1/2 the ISSUE FEE shown above.

II. PART B - FEE(S) TRANSMITTAL, or its equivalent, must be completed and returned to the United States Patent and Trademark Office (USPTO) with your ISSUE FEE and PUBLICATION FEE (if required). If you are charging the fee(s) to your deposit account, section "4b" of Part B - Fee(s) Transmittal should be completed and an extra copy of the form should be submitted. If an equivalent of Part B is filed, a request to reapply a previously paid issue fee must be clearly made, and delays in processing may occur due to the difficulty in recognizing the paper as an equivalent of Part B.

III. All communications regarding this application must give the application number. Please direct all communications prior to issuance to Mail Stop ISSUE FEE unless advised to the contrary.

IMPORTANT REMINDER: Utility patents issuing on applications filed on or after Dec. 12, 1980 may require payment of maintenance fees. It is patentee's responsibility to ensure timely payment of maintenance fees when due.

PTOL-85 (Rev. 02/11)

PART B - FEE(S) TRANSMITTAL

Complete and send this form, together with applicable fee(s), to: Mail **Mail Stop ISSUE FEE**
Commissioner for Patents
P.O. Box 1450
Alexandria, Virginia 22313-1450
or Fax (571)-273-2885

INSTRUCTIONS: This form should be used for transmitting the ISSUE FEE and PUBLICATION FEE (if required). Blocks 1 through 5 should be completed where appropriate. All further correspondence including the Patent, advance orders and notification of maintenance fees will be mailed to the current correspondence address as indicated unless corrected below or directed otherwise in Block 1, by (a) specifying a new correspondence address; and/or (b) indicating a separate "FEE ADDRESS" for maintenance fee notifications.

CURRENT CORRESPONDENCE ADDRESS (Note: Use Block 1 for any change of address)

22428 7590 05/14/2012
FOLEY AND LARDNER LLP
SUITE 500
3000 K STREET NW
WASHINGTON, DC 20007

Note: A certificate of mailing can only be used for domestic mailings of the Fee(s) Transmittal. This certificate cannot be used for any other accompanying papers. Each additional paper, such as an assignment or formal drawing, must have its own certificate of mailing or transmission.

Certificate of Mailing or Transmission
I hereby certify that this Fee(s) Transmittal is being deposited with the United States Postal Service with sufficient postage for first class mail in an envelope addressed to the Mail Stop ISSUE FEE address above, or being facsimile transmitted to the USPTO (571) 273-2885, on the date indicated below.

(Depositor's name)
(Signature)
(Date)

APPLICATION NO.	FILING DATE	FIRST NAMED INVENTOR	ATTORNEY DOCKET NO.	CONFIRMATION NO.
13/187,328	07/20/2011	Radmond Vincent ARCETA	086554-1553	6052

TITLE OF INVENTION: MEDICAL CART, MEDICATION MODULE, HEIGHT ADJUSTMENT MECHANISM, AND METHOD OF MEDICATION TRANSPORT

APPLN. TYPE	SMALL ENTITY	ISSUE FEE DUE	PUBLICATION FEE DUE	PREV. PAID ISSUE FEE	TOTAL FEE(S) DUE	DATE DUE
nonprovisional	NO	$1740	$300	$0	$2040	08/14/2012

EXAMINER	ART UNIT	CLASS-SUBCLASS
VANAMAN, FRANK BENNETT	3618	280-047350

1. Change of correspondence address or indication of "Fee Address" (37 CFR 1.363).
- ❑ Change of correspondence address (or Change of Correspondence Address form PTO/SB/122) attached.
- ❑ "Fee Address" indication (or "Fee Address" Indication form PTO/SB/47; Rev 03-02 or more recent) attached. **Use of a Customer Number is required.**

2. For printing on the patent front page, list
(1) the names of up to 3 registered patent attorneys or agents OR, alternatively,
(2) the name of a single firm (having as a member a registered attorney or agent) and the names of up to 2 registered patent attorneys or agents. If no name is listed, no name will be printed.
1_____
2_____
3_____

3. ASSIGNEE NAME AND RESIDENCE DATA TO BE PRINTED ON THE PATENT (print or type)

PLEASE NOTE: Unless an assignee is identified below, no assignee data will appear on the patent. If an assignee is identified below, the document has been filed for recordation as set forth in 37 CFR 3.11. Completion of this form is NOT a substitute for filing an assignment.

(A) NAME OF ASSIGNEE (B) RESIDENCE: (CITY and STATE OR COUNTRY)

Please check the appropriate assignee category or categories (will not be printed on the patent) : ❑ Individual ❑ Corporation or other private group entity ❑ Government

4a. The following fee(s) are submitted:
- ❑ Issue Fee
- ❑ Publication Fee (No small entity discount permitted)
- ❑ Advance Order - # of Copies _____

4b. Payment of Fee(s): **(Please first reapply any previously paid issue fee shown above)**
- ❑ A check is enclosed.
- ❑ Payment by credit card. Form PTO-2038 is attached.
- ❑ The Director is hereby authorized to charge the required fee(s), any deficiency, or credit any overpayment, to Deposit Account Number _____ (enclose an extra copy of this form).

5. **Change in Entity Status** (from status indicated above)
- ❑ a. Applicant claims SMALL ENTITY status. See 37 CFR 1.27.
- ❑ b. Applicant is no longer claiming SMALL ENTITY status. See 37 CFR 1.27(g)(2).

NOTE: The Issue Fee and Publication Fee (if required) will not be accepted from anyone other than the applicant; a registered attorney or agent; or the assignee or other party in interest as shown by the records of the United States Patent and Trademark Office.

Authorized Signature _____ Date _____

Typed or printed name _____ Registration No. _____

This collection of information is required by 37 CFR 1.311. The information is required to obtain or retain a benefit by the public which is to file (and by the USPTO to process) an application. Confidentiality is governed by 35 U.S.C. 122 and 37 CFR 1.14. This collection is estimated to take 12 minutes to complete, including gathering, preparing, and submitting the completed application form to the USPTO. Time will vary depending upon the individual case. Any comments on the amount of time you require to complete this form and/or suggestions for reducing this burden, should be sent to the Chief Information Officer, U.S. Patent and Trademark Office, U.S. Department of Commerce, P.O. Box 1450, Alexandria, Virginia 22313-1450. DO NOT SEND FEES OR COMPLETED FORMS TO THIS ADDRESS. SEND TO: Commissioner for Patents, P.O. Box 1450, Alexandria, Virginia 22313-1450.

Under the Paperwork Reduction Act of 1995, no persons are required to respond to a collection of information unless it displays a valid OMB control number.

UNITED STATES PATENT AND TRADEMARK OFFICE

UNITED STATES DEPARTMENT OF COMMERCE
United States Patent and Trademark Office
Address: COMMISSIONER FOR PATENTS
P.O. Box 1450
Alexandria, Virginia 22313-1450
www.uspto.gov

APPLICATION NO.	FILING DATE	FIRST NAMED INVENTOR	ATTORNEY DOCKET NO.	CONFIRMATION NO.
13/187,328	07/20/2011	Radmond Vincent ARCETA	086554-1553	6052

22428 7590 05/14/2012
FOLEY AND LARDNER LLP
SUITE 500
3000 K STREET NW
WASHINGTON, DC 20007

EXAMINER
VANAMAN, FRANK BENNETT

ART UNIT	PAPER NUMBER
3618	

DATE MAILED: 05/14/2012

Determination of Patent Term Adjustment under 35 U.S.C. 154 (b)
(application filed on or after May 29, 2000)

The Patent Term Adjustment to date is 0 day(s). If the issue fee is paid on the date that is three months after the mailing date of this notice and the patent issues on the Tuesday before the date that is 28 weeks (six and a half months) after the mailing date of this notice, the Patent Term Adjustment will be 0 day(s).

If a Continued Prosecution Application (CPA) was filed in the above-identified application, the filing date that determines Patent Term Adjustment is the filing date of the most recent CPA.

Applicant will be able to obtain more detailed information by accessing the Patent Application Information Retrieval (PAIR) WEB site (http://pair.uspto.gov).

Any questions regarding the Patent Term Extension or Adjustment determination should be directed to the Office of Patent Legal Administration at (571)-272-7702. Questions relating to issue and publication fee payments should be directed to the Customer Service Center of the Office of Patent Publication at 1-(888)-786-0101 or (571)-272-4200.

PTOL-85 (Rev. 02/11)

Privacy Act Statement

The Privacy Act of 1974 (P.L. 93-579) requires that you be given certain information in connection with your submission of the attached form related to a patent application or patent. Accordingly, pursuant to the requirements of the Act, please be advised that: (1) the general authority for the collection of this information is 35 U.S.C. 2(b)(2); (2) furnishing of the information solicited is voluntary; and (3) the principal purpose for which the information is used by the U.S. Patent and Trademark Office is to process and/or examine your submission related to a patent application or patent. If you do not furnish the requested information, the U.S. Patent and Trademark Office may not be able to process and/or examine your submission, which may result in termination of proceedings or abandonment of the application or expiration of the patent.

The information provided by you in this form will be subject to the following routine uses:

1. The information on this form will be treated confidentially to the extent allowed under the Freedom of Information Act (5 U.S.C. 552) and the Privacy Act (5 U.S.C 552a). Records from this system of records may be disclosed to the Department of Justice to determine whether disclosure of these records is required by the Freedom of Information Act.
2. A record from this system of records may be disclosed, as a routine use, in the course of presenting evidence to a court, magistrate, or administrative tribunal, including disclosures to opposing counsel in the course of settlement negotiations.
3. A record in this system of records may be disclosed, as a routine use, to a Member of Congress submitting a request involving an individual, to whom the record pertains, when the individual has requested assistance from the Member with respect to the subject matter of the record.
4. A record in this system of records may be disclosed, as a routine use, to a contractor of the Agency having need for the information in order to perform a contract. Recipients of information shall be required to comply with the requirements of the Privacy Act of 1974, as amended, pursuant to 5 U.S.C. 552a(m).
5. A record related to an International Application filed under the Patent Cooperation Treaty in this system of records may be disclosed, as a routine use, to the International Bureau of the World Intellectual Property Organization, pursuant to the Patent Cooperation Treaty.
6. A record in this system of records may be disclosed, as a routine use, to another federal agency for purposes of National Security review (35 U.S.C. 181) and for review pursuant to the Atomic Energy Act (42 U.S.C. 218(c)).
7. A record from this system of records may be disclosed, as a routine use, to the Administrator, General Services, or his/her designee, during an inspection of records conducted by GSA as part of that agency's responsibility to recommend improvements in records management practices and programs, under authority of 44 U.S.C. 2904 and 2906. Such disclosure shall be made in accordance with the GSA regulations governing inspection of records for this purpose, and any other relevant (i.e., GSA or Commerce) directive. Such disclosure shall not be used to make determinations about individuals.
8. A record from this system of records may be disclosed, as a routine use, to the public after either publication of the application pursuant to 35 U.S.C. 122(b) or issuance of a patent pursuant to 35 U.S.C. 151. Further, a record may be disclosed, subject to the limitations of 37 CFR 1.14, as a routine use, to the public if the record was filed in an application which became abandoned or in which the proceedings were terminated and which application is referenced by either a published application, an application open to public inspection or an issued patent.
9. A record from this system of records may be disclosed, as a routine use, to a Federal, State, or local law enforcement agency, if the USPTO becomes aware of a violation or potential violation of law or regulation.

Notice of Allowability	Application No.	Applicant(s)	
	13/187,328	ARCETA ET AL.	
	Examiner	Art Unit	
	FRANK VANAMAN	3618	

-- The MAILING DATE of this communication appears on the cover sheet with the correspondence address--

All claims being allowable, PROSECUTION ON THE MERITS IS (OR REMAINS) CLOSED in this application. If not included herewith (or previously mailed), a Notice of Allowance (PTOL-85) or other appropriate communication will be mailed in due course. **THIS NOTICE OF ALLOWABILITY IS NOT A GRANT OF PATENT RIGHTS.** This application is subject to withdrawal from issue at the initiative of the Office or upon petition by the applicant. See 37 CFR 1.313 and MPEP 1308.

1. ☒ This communication is responsive to *applicant's amendment, filed March 28, 2012*.

2. ☐ An election was made by the applicant in response to a restriction requirement set forth during the interview on _____; the restriction requirement and election have been incorporated into this action.

3. ☒ The allowed claim(s) is/are *1-24*.

4. ☐ Acknowledgment is made of a claim for foreign priority under 35 U.S.C. § 119(a)-(d) or (f).
   a) ☐ All b) ☐ Some* c) ☐ None of the:
      1. ☐ Certified copies of the priority documents have been received.
      2. ☐ Certified copies of the priority documents have been received in Application No. _____ .
      3. ☐ Copies of the certified copies of the priority documents have been received in this national stage application from the International Bureau (PCT Rule 17.2(a)).

   * Certified copies not received: _____.

Applicant has THREE MONTHS FROM THE "MAILING DATE" of this communication to file a reply complying with the requirements noted below. Failure to timely comply will result in ABANDONMENT of this application.
THIS THREE-MONTH PERIOD IS NOT EXTENDABLE.

5. ☐ A SUBSTITUTE OATH OR DECLARATION must be submitted. Note the attached EXAMINER'S AMENDMENT or NOTICE OF INFORMAL PATENT APPLICATION (PTO-152) which gives reason(s) why the oath or declaration is deficient.

6. ☐ CORRECTED DRAWINGS (as "replacement sheets") must be submitted.
   (a) ☐ including changes required by the Notice of Draftsperson's Patent Drawing Review (PTO-948) attached
      1) ☐ hereto or 2) ☐ to Paper No./Mail Date _____.
   (b) ☐ including changes required by the attached Examiner's Amendment / Comment or in the Office action of Paper No./Mail Date _____.

   Identifying indicia such as the application number (see 37 CFR 1.84(c)) should be written on the drawings in the front (not the back) of each sheet. Replacement sheet(s) should be labeled as such in the header according to 37 CFR 1.121(d).

7. ☐ DEPOSIT OF and/or INFORMATION about the deposit of BIOLOGICAL MATERIAL must be submitted. Note the attached Examiner's comment regarding REQUIREMENT FOR THE DEPOSIT OF BIOLOGICAL MATERIAL.

Attachment(s)

1. ☐ Notice of References Cited (PTO-892)
2. ☐ Notice of Draftperson's Patent Drawing Review (PTO-948)
3. ☐ Information Disclosure Statements (PTO/SB/08), Paper No./Mail Date _____
4. ☐ Examiner's Comment Regarding Requirement for Deposit of Biological Material
5. ☐ Notice of Informal Patent Application
6. ☐ Interview Summary (PTO-413), Paper No./Mail Date _____ .
7. ☐ Examiner's Amendment/Comment
8. ☐ Examiner's Statement of Reasons for Allowance
9. ☐ Other _____.

/Frank B Vanaman/
Primary Examiner, Art Unit 3618

Search Notes	Application/Control No.	Applicant(s)/Patent Under Reexamination
	13187328	ARCETA ET AL.
	Examiner	**Art Unit**
	FRANK VANAMAN	3618

SEARCHED

Class	Subclass	Date	Examiner
280	47.34, 47.35, 79.11, 79.2, 33.991, 33.992	1/10/12	FBV
280	638, 651		
108	147.19, 147.21		
235	431		

SEARCH NOTES

Search Notes	Date	Examiner
Previous Search Updated	5/7/12	FBV

INTERFERENCE SEARCH

Class	Subclass	Date	Examiner
280	47.35	5/7/12	FBV
108	147.19	5/7/12	FBV
	Text search in PGPub applications, text and classification in UPAD (See EAST history)	5/7/12	FBV

Issue Classification	Application/Control No.	Applicant(s)/Patent Under Reexamination
	13187328	ARCETA ET AL.
	Examiner	**Art Unit**
	FRANK VANAMAN	3618

ORIGINAL		INTERNATIONAL CLASSIFICATION										
CLASS	SUBCLASS	CLAIMED					NON-CLAIMED					
280	47.35	B	6	2	B	3 / 02 (2006.01.01)						

CROSS REFERENCE(S)

CLASS	SUBCLASS (ONE SUBCLASS PER BLOCK)				
108	147.19				

☒ **Claims renumbered in the same order as presented by applicant** ☐ **CPA** ☐ **T.D.** ☐ **R.1.47**

Final	Original	Final	Original	Final	Original	Final	Original	Final	Original	Final	Original	Final	Original	Final	Original
1	1	17	17												
2	2	18	18												
3	3	19	19												
4	4	20	20												
5	5	21	21												
6	6	22	22												
7	7	23	23												
8	8	24	24												
9	9														
10	10														
11	11														
12	12														
13	13														
14	14														
15	15														
16	16														

NONE (Assistant Examiner) (Date)	**Total Claims Allowed:** 24	
/FRANK VANAMAN/ Primary Examiner.Art Unit 3618 5/7/12 (Primary Examiner) (Date)	O.G. Print Claim(s) 1	O.G. Print Figure 1

Index of Claims	Application/Control No.	Applicant(s)/Patent Under Reexamination
	13187328	ARCETA ET AL.
	Examiner	**Art Unit**
	FRANK VANAMAN	3618

✓	Rejected	-	Cancelled	N	Non-Elected	A	Appeal
=	Allowed	÷	Restricted	I	Interference	O	Objected

☒ Claims renumbered in the same order as presented by applicant ☐ CPA ☐ T.D. ☐ R.1.47

CLAIM		DATE								
Final	Original	01/10/2012	05/07/2012							
	1	✓	=							
	2	✓	=							
	3	✓	=							
	4	✓	=							
	5	✓	=							
	6	✓	=							
	7	✓	=							
	8	✓	=							
	9	✓	=							
	10	✓	=							
	11	✓	=							
	12	✓	=							
	13	✓	=							
	14	✓	=							
	15	✓	=							
	16	✓	=							
	17	✓	=							
	18	✓	=							
	19	✓	=							
	20	✓	=							
	21	✓	=							
	22	✓	=							
	23	✓	=							
	24	✓	=							

EAST Search History

EAST Search History (Prior Art)

Ref #	Hits	Search Query	DBs	Default Operator	Plurals	Time Stamp
L1	64	("3031207" | "3910659" | "6050660" | "6418854" | "6721178" | "6860495" | "D487178" | "4986555" | "6435407" | "D402529" | "D441513" | "D468420" | "D486915" | "20020125664" | "4735469" | "5704625" | "6682030" | "7104556" | "D349594" | "D462674" | "D481847" | "D482173" | "D500575" | "5058911" | "6484939" | "6493220" | "6578501" | "6883439" | "7490837" | "3024036" | "4440096" | "4967928" | "5151581" | "5735839" | "5758848" | "6722673" | "6874807" | "D240629" | "D389917" | "20020165641" | "4127202" | "5257767" | "6219587" | "D390733" | "D438952" | "D459477" | "3208768" | "4894600" | "5174223" | "5841361" | "D146375" | "D387168" | "D458780" | "D465895" | "4071740" | "4875469" | "4875696" | "5842708" | "6073942" | "6615744" | "6626445" | "D367381" | "D410230" | "D497462").PN.	US-PGPUB; USPAT	OR	OFF	2012/05/07 08:19
L2	3782	((280/47.34) or (280/47.35) or (280/79.11) or (280/79.3) or (280/638) or (280/651) or (280/33.992) or (108/147.19) or (108/147.21) or (235/431)).CCLS.	USPAT	OR	OFF	2012/05/07 08:25
L3	816	((280/47.34) or (280/47.35) or (280/79.11) or (280/79.3) or (280/638) or (280/651) or (280/33.992) or (108/147.19) or (108/147.21) or (235/431)).CCLS.	US-PGPUB	OR	OFF	2012/05/07 09:14
L4	816	((280/47.34) or (280/47.35) or (280/79.11) or (280/79.3) or (280/638) or (280/651) or (280/33.992) or (108/147.19) or (108/147.21) or (235/431)).CCLS.	US-PGPUB	OR	OFF	2012/05/07 09:33
L6	961	(cart or trolley or trollies) same (height or vertical) same (adjust$4)	US-PGPUB	OR	ON	2012/05/07 09:46
L8	431	(cart or trolley or trollies) same (slid$4) same (adjust$4)	US-PGPUB	OR	ON	2012/05/07 10:27
L10	170	medication same cart same (inventory or dispens$3)	US-PGPUB	OR	OFF	2012/05/07 11:00
L12	22	(("3910659") or ("4071740") or ("4440096") or ("4894600") or ("5058911") or ("5151581") or ("5174223") or ("5257767") or ("5734839") or ("5841361") or ("6050660") or ("6435407") or ("6484939") or ("6493220") or ("6578501") or ("6615744") or ("6626445") or ("6682030") or ("6721178") or ("6722673") or ("6860494") or ("20020165641")).PN.	US-PGPUB; USPAT	OR	OFF	2012/05/07 11:15
L13	203	medication same cart same (inventory or dispens$3)	US-PGPUB	OR	ON	2012/05/07 11:17

L14	33	l13 not l10	US-PGPUB	OR	ON	2012/05/07 11:17

EAST Search History (Interference)

Ref #	Hits	Search Query	DBs	Default Operator	Plurals	Time Stamp
L5	21	((280/47.34) or (280/47.35) or (280/79.11) or (280/79.3) or (280/638) or (280/651) or (280/33.992) or (108/147.19) or (108/147.21) or (235/431)).CCLS.	UPAD	OR	OFF	2012/05/07 09:45
L7	23	(cart or trolley or trollies) same (height or vertical) same (adjust$4)	UPAD	OR	ON	2012/05/07 10:23
L9	13	(cart or trolley or trollies) same (slid$4) same (adjust$4)	UPAD	OR	ON	2012/05/07 10:27
L11	2	medication same cart same (inventory or dispens$3)	UPAD	OR	OFF	2012/05/07 11:15
L15	2	medication same cart same (inventory or dispens$3)	UPAD	OR	ON	2012/05/07 11:19

5/ 7/ 2012 11:20:31 AM
C:\ Users\ fvanaman\ Documents\ EAST\ Workspaces\ 13187328.wsp

IN THE UNITED STATES PATENT AND TRADEMARK OFFICE

Applicants:	Radmond ARCETA et al.
Title:	MEDICAL CART, MEDICATION MODULE, HEIGHT ADJUSTMENT MECHANISM, AND METHOD OF MEDICATION TRANSPORT
Appl. No.:	13/187,328
Filing Date:	7/20/2011
Examiner:	Frank Bennett Vanaman
Art Unit:	3618
Confirmation No.:	6052

AMENDMENT AND REPLY UNDER 37 CFR 1.111

Mail Stop Amendment
Commissioner for Patents
P.O. Box 1450
Alexandria, VA 22313-1450

Commissioner:

This communication is responsive to the Non-Final Office Action dated January 12, 2012, concerning the above-referenced patent application.

Amendments to the Abstract are presented as a new Abstract attached to this document to replace the previously submitted Abstract.

Amendments to the Claims are reflected in the listing of claims which begins on page 2 of this document.

Remarks/Arguments begin on page 7 of this document.

Amendments to the Claims:

This listing of claims will replace all prior versions, and listings, of claims in the application:

Listing of Claims:

1. (Currently Amended) A cart comprising:

a work platform including a work surface and at least one compartment for containing an item within the compartment, wherein the work surface is disposed above a top of the at least one compartment;

a base configured to be movable in at least a rearward direction; and

a height adjustment mechanism for adjusting a height of the work platform relative to the base, wherein the height adjustment mechanism is configured to releasably position the work platform at a plurality of heights, the height adjustment mechanism comprising:

a driver configured to releasably position the work platform; and

an actuator for controlling the driver,

wherein the base includes a portion projecting, relative to the height adjustment mechanism, in a forward direction that is substantially opposite to the rearward direction,

wherein the work platform includes a portion projecting, relative to the height adjustment mechanism, in the forward direction, wherein the compartment is disposed in the portion of the work platform projecting in the forward direction, and the compartment is configured to permit a user facing in the rearward direction to access the item within the compartment,

wherein the actuator is disposed above the compartment and on the portion of the work platform projecting in the forward direction, and

wherein the work surface is movable relative to a remainder of the work platform from an extended position to a non-extended position.

2. (Original) The cart of claim 1, wherein the height adjustment mechanism comprises a first telescoping portion connected to the base, and a second telescoping portion connected to the work platform and configured to move relative to the first telescoping portion, and wherein the driver is configured to releasably position the second telescoping portion relative to the first telescoping portion.

3. (Original) The cart of claim 2, wherein the first telescoping portion is a stationary outer casing, and the second telescoping portion is a movable inner casing.

4. (Original) The cart of claim 1, wherein the work portion includes a handle on the portion of the work platform projecting in the forward direction, wherein the actuator is disposed on the handle.

5. (Original) The cart of claim 1, wherein the actuator is disposed at a spaced vertical distance above the compartment.

6. (Original) The cart of claim 1, wherein the work platform further comprises a movable platform configured to move in at least one of the forward direction and the rearward direction.

7. (Currently Amended) The cart of claim 1, wherein the work surface is configured to move in at least one of a leftward direction and a rightward direction along an arcuate path that faces the forward direction.

8. (Original) The cart of claim 1, wherein the driver includes a piston that, in response to the user's actuation of the actuator, permits gas to flow out of the piston during lowering of the height of the work platform, and that, in response to the user's actuation of the actuator, permits gas to flow into the piston during increasing of the height of the work platform.

9. (Currently Amended) A cart comprising:

a work platform including a movable platform, a work surface movable relative to the movable platform, and at least one compartment for containing an item, wherein the movable platform and the work surface are disposed above a top of the at least one compartment;

a base configured to be movable in at least a rearward direction; and

a height adjustment mechanism for adjusting a height of the work platform relative to the base,

wherein the base includes a portion projecting, relative to the height adjustment mechanism, in a forward direction that is substantially opposite to the rearward direction,

wherein the work platform includes a portion projecting, relative to the height adjustment mechanism, in the forward direction, the at least one compartment is disposed in the portion of the work platform projecting in the forward direction, and the at least one compartment is configured to permit a user facing in the rearward direction to access the item within the at least one compartment,

wherein the movable platform can be moved in at least one of the forward and rearward directions,

wherein the work surface can be moved in at least one of a leftward direction and a rightward direction relative to the movable platform, and

wherein the work surface is configured to move in the at least one of the leftward direction and [[or]] rightward direction through a slot in a side of the portion of the work platform projecting in the forward direction.

10. (Currently Amended) The cart of claim 9, wherein the work surface is configured to move in the at least one of the leftward and rightward directions ~~direction~~ along an arcuate path that faces the forward direction.

11. (Currently Amended) The cart of claim 9, wherein the work surface is configured to move in both [[a]] the leftward direction through the slot and [[a]] the rightward direction through another slot along an arcuate path that faces the forward direction.

12. (Currently Amended) The cart of claim 9, wherein the work platform is configured such that the work surface can be disposed below the movable platform.

13. (Currently Amended) The cart of claim 9, wherein the work platform is configured such that the movable platform can be moved in the at least one of the forward and rearward directions ~~direction~~ without moving the work surface.

14. (Original) The cart of claim 9, wherein the at least one compartment comprises a plurality of compartments.

15. (Original) The cart of claim 9, wherein the movable platform is a laptop platform.

16. (Currently Amended) A cart comprising:

a work platform including a movable platform, a work surface movable relative to the movable platform, and at least one compartment for containing an item;

a base configured to be movable in at least a rearward direction; and

a height adjustment mechanism for adjusting a height of the work platform relative to the base,

wherein the base includes a portion projecting, relative to the height adjustment mechanism, in a forward direction that is substantially opposite to the rearward direction,

wherein the work platform includes a portion projecting, relative to the height adjustment mechanism, in the forward direction, wherein the at least one compartment is disposed in the portion of the work platform projecting in the forward direction, and the at least one compartment is configured to permit a user facing in the rearward direction to access the item within the at least one compartment,

wherein the movable platform can be moved in at least one of the forward and rearward directions, and

wherein the work surface can be moved in at least one of a leftward direction and a rightward direction relative to the movable platform, ~~and~~

wherein the work platform includes a secondary work surface, and the work platform is configured such that both the secondary work surface and the movable platform are exposed when the movable platform moves in the at least one of the forward and [[or]] rearward ~~direction~~ directions, and

wherein the secondary work surface and the movable platform are positioned above a top of the at least one compartment.

17. (Currently Amended) The cart of claim 16, wherein the work surface is configured to move in the at least one of the leftward direction and the rightward direction along an arcuate path that faces the forward direction.

18. (Original) The cart of claim 16, wherein the work surface is configured to move in both the leftward direction and the rightward direction.

19. (Currently Amended) The cart of claim 16, wherein the work platform is configured such that the work surface can be disposed below the movable platform.

20. (Currently Amended) The cart of claim 16, wherein the work platform is configured such that the movable platform can be moved in the at least one of the forward and rearward ~~direction~~ directions without moving the work surface.

21. (Currently Amended) The cart of claim 16, wherein the work platform is configured such that the secondary work surface can be positioned in vertical alignment with the movable platform.

22. (Currently Amended) The cart of claim 16, wherein the work platform is configured such that the secondary work surface can be disposed beneath the movable platform.

23. (Original) The cart of claim 16, wherein the at least one compartment comprises a plurality of compartments.

24. (Original) The cart of claim 16, wherein the movable platform is a laptop platform.

REMARKS

Applicants respectfully request reconsideration of the present application in view of the foregoing amendments and in view of the reasons that follow. After amending the claims as set forth above, claims 1-24 are now pending in this application.

Interview

Applicants thank the Examiner for the courtesy extended to Mr. Matthew Kremer (Applicants' representative), Mr. Kevin Fitzpatrick (one of the inventors), and Mr. Chad Holzshu (a representative from the Assignee) during the telephonic interview on March 20, 2012. An interview summary was issued by the Examiner on March 21, 2012, setting forth the substance of the interview. The statements made in the Interview Summary are correct.

Specification

An objection has been raised with respect to the Abstract because of the phrase "is described." The Abstract has been amended to remove this phrase. For at least this reason, favorable reconsideration of the objection is respectfully requested.

Double Patenting

Claims 1-5, 9-11, 13-16, 18, and 23-24 are rejected on the ground of nonstatutory obviousness-type double patenting as being unpatentable over claims 1-7 of U.S. Patent 7,594,668. It is respectfully requested that the double patenting rejection be held in abeyance until allowable claims are indicated by the Examiner in the present Application (since a timely filed terminal disclaimer would overcome the rejection such that further consideration of the claims on that rejection should not be necessary). 37 C.F.R. § 1.111(b).

Rejection of Claims 1-8 Based on Clark, Rice, Murphy, and Ellefson

Claims 1-3, 5-6, and 8 are rejected as allegedly being unpatentable over U.S. Patent No. 6,721,178 ("Clark") and U.S. Patent No. 4,440,496 ("Rice"). Claim 4 is rejected as allegedly being unpatentable over Clark, Rice, and U.S. Patent No. 6,626,445 ("Murphy"). Claim 7 is rejected as allegedly being unpatentable over Clark, Rice, and U.S. Patent No. 4,976,450 ("Ellefson"). For at least the following reasons, these rejections are traversed.

Claim 1 (as amended) recites, among other things, a cart comprising: a work platform including a work surface and at least one compartment for containing an item within the compartment, wherein the work surface is disposed above a top of the at least one compartment; a base; and a height adjustment mechanism for adjusting a height of the work platform relative to the base, "wherein the work surface is movable relative to a remainder of the work platform from an extended position to a non-extended position." Support for the amendments to claim 1 may be found in Figs. 1 and 4A-4B of the specification.

Clark does not teach or suggest the combination of features of claim 1. For example, Clark does not teach or suggest a cart with a height adjustment mechanism for adjusting a height of the work platform relative to the base, "wherein the work surface is disposed above a top of the at least one compartment...wherein the work surface is movable relative to a remainder of the work platform from an extended position to a non-extended position." These features contribute to the cart's ability to be made compact for better mobility and to be expanded for increased workable surface area when stationary. Also, the placement of the work surface above the compartment permits easier accessibility to the increased workable surface area than would be otherwise. In the rejection of claim 1, the space below the surface 86 and above the keyboard tray 70 of Clark is considered to be the compartment of claim 1. *See* Office Action at page 3. However, there is no movable work surface located above this space. Thus, Clark does not disclose the cart with a movable work surface of claim 1.

Rice, Murphy, and Ellefson do not cure the deficiency of Clark because none of these references discloses a cart having a height-adjustable work platform with a movable work surface located above a compartment. Rice merely discloses a split-top table with adjustable front and rear planar surfaces and does not disclose a movable work surface located above a compartment. Murphy describes a cart with no height adjustment mechanism for adjusting a height of the work platform relative to the base. Similarly, Ellefson discloses a mobile tool chest with no height adjustment mechanism for adjusting a height of the work platform relative to the base. Thus, claim 1 is allowable over Clark, Rice, Murphy, and/or Ellefson.

Furthermore, one of ordinary skill in the art would not incorporate the teachings of Rice, Murphy, and Ellefson into the workstation of Clark so as to arrive at a height-adjustable work platform with a movable work surface located above a compartment. For example, if one of ordinary skill in the art had tried to incorporate the pivotal trays 48, 50, and 52 of

Ellefson into the workstation of Clark, the resulting work station would be top heavy if the trays were deployed. The result is that the deployed trays would make the workstation of Clark unstable so that it would be easily knocked over. The reason that the pivotal trays can work in the tool chest of Ellefson is that a tool chest contains heavy tools so as to prevent the instability, a condition that is lacking in Clark. In other words, the overall design of the tool chest of Ellefson (including its lower center of gravity) permits the use of pivotal trays while the workstation of Clark (with its higher center of gravity) does not. Accordingly, one of ordinary skill in the art would not combine the teachings of Clark, Rice, and Ellefson so as to arrive at a height-adjustable work platform with a movable work surface located above a compartment. Thus, claim 1 is allowable over Clark, Rice, and Ellefson.

Similarly, one of ordinary skill in the art would not have had a reason to incorporate any particular feature on Murphy into the workstation of Clark because Murphy is designed to be low to the ground (that is, a lower center of gravity) and modifying the workstation of Clark (with its high center of gravity) based on the teachings of Murphy would likely make the resulting workstation top heavy such that it would be easily knocked over. Accordingly, one of ordinary skill in the art would not combine the teachings of Clark, Rice, and Murphy so as to arrive at a height-adjustable work platform with a movable work surface located above a compartment. Thus, claim 1 is allowable over Clark, Rice, and Murphy.

Claims 2-8 depend from claim 1, and are allowable by virtue of their dependency from claim 1, without regard to the further patentable features contained therein.

For at least these reasons, favorable reconsideration of these rejections is respectfully requested.

Rejection of Claims 9-24 Based on Clark and Ellefson

Claims 9-24 are rejected as allegedly being unpatentable over Clark and Ellefson. For at least the following reasons, this rejection is traversed.

Claim 9 (as amended) recites, among other things, a cart comprising: a work platform including a movable platform, a work surface movable relative to the movable platform, and at least one compartment for containing an item, wherein the movable platform and the work surface are disposed above a top of the at least one compartment; a base; and a height adjustment mechanism for adjusting a height of the work platform relative to the base,

"wherein the movable platform can be moved in at least one of the forward and rearward directions, wherein the work surface can be moved in at least one of a leftward direction and a rightward direction relative to the movable platform." Support for the amendments to claim 9 may be found in Figs. 1, 2A-2B, 3A-3B, 4A-4B of the specification.

Clark does not teach or suggest the combination of features of claim 9. For example, Clark does not teach or suggest a cart with a height adjustment mechanism for adjusting a height of the work platform relative to the base, "wherein the movable platform and the work surface are disposed above a top of the at least one compartment." These features contributes to the cart's ability to be made compact for better mobility and to be expanded for increased workable surface area when stationary. Also, the placement of the work platform above the compartment permits easier accessibility to the increased workable surface area than would be otherwise. In the rejection of claim 9, the space below the surface 86 and above the keyboard tray 70 of Clark is considered to be the compartment of claim 9. *See* Office Action at page 5. However, there are no movable work surface and movable work platform located above this space. Thus, Clark does not disclose the cart with the movable work surface and movable work platform of claim 9.

Ellefson do not cure the deficiency of Clark because this reference does not disclose a height-adjustable work platform with a movable work surface and a movable work platform located above a compartment. Ellefson simply discloses a mobile tool chest with no height adjustment mechanism for adjusting a height of the work platform relative to the base. Furthermore, one of ordinary skill in the art would not incorporate the teachings of Ellefson into the workstation of Clark so as to arrive at a height-adjustable work platform with a movable work surface and movable work platform located above a compartment for the same reasons as provided above with respect to the rejection of claim 1. That is, if one of ordinary skill in the art were try to incorporate the pivotal trays 48, 50, and 52 of Ellefson into the workstation of Clark, the resulting work station would be top heavy if the trays were deployed, thus making the workstation of Clark unstable so that it would be easily knocked over. Thus, claim 9 is allowable over Clark and Ellefson.

Claim 16 (as amended) recites, among other things, a cart comprising: a work platform including a movable platform, a work surface movable relative to the movable platform, and at least one compartment for containing an item; a base; and a height

adjustment mechanism for adjusting a height of the work platform relative to the base, "wherein the secondary work surface and the movable platform are positioned above a top of the at least one compartment." Support for the amendments to claim 16 may be found in Figs. 1 and 2A-2B.

Clark does not teach or suggest the combination of features of claim 16. For example, Clark does not teach or suggest a cart with a height adjustment mechanism for adjusting a height of the work platform relative to the base, "wherein the secondary work surface and the movable platform are positioned above a top of the at least one compartment." These features contribute to the cart's ability to be made compact for better mobility and to be expanded for increased workable surface area when stationary. Also, the placement of the work platform above the compartment permits easier accessibility to the increased workable surface area than would be otherwise. In the rejection of claim 16, the space below the surface 86 and above the keyboard tray 70 of Clark is considered to be the compartment of claim 9. *See* Office Action at page 5. However, there are no secondary work surface and movable platform located above this space. Thus, Clark does not disclose the secondary work surface and movable platform of claim 16.

Ellefson do not cure the deficiency of Clark because this reference does not disclose a height-adjustable work platform with a movable platform located above a compartment. Ellefson simply discloses a mobile tool chest with no height adjustment mechanism for adjusting a height of the work platform relative to the base. Furthermore, one of ordinary skill in the art would not incorporate the teachings of Ellefson into the workstation of Clark so as to arrive at a height-adjustable work platform with a movable platform located above a compartment for the same reasons as provided above with respect to the rejection of claim 1. That is, if one of ordinary skill in the art were try to incorporate the pivotal trays 48, 50, and 52 of Ellefson into the workstation of Clark, the resulting work station would be top heavy if the trays were deployed, thus making the workstation of Clark unstable so that it would be easily knocked over. Thus, claim 16 is allowable over Clark and Ellefson.

Claims 10-15 and 17-24 depends from claim 9 or 16, and are allowable by virtue of their dependency from claim 9 or 16, without regard to the further patentable features contained therein.

For at least these reasons, favorable reconsideration of the rejection is respectfully requested.

Rejection of Claims 9-15 Based on Clark and Manalang

Claims 9-15 are rejected as allegedly being unpatentable over Clark and U.S. Patent Application Publication 2002/0165641 ("Manalang"). For at least the following reasons, this rejection is traversed.

Claim 9 (as amended) recites, among other things, a cart comprising: a work platform including a movable platform, a work surface movable relative to the movable platform, and at least one compartment for containing an item, wherein the movable platform and the work surface are disposed above a top of the at least one compartment; a base; and a height adjustment mechanism for adjusting a height of the work platform relative to the base, "wherein the movable platform can be moved in at least one of the forward and rearward directions, wherein the work surface can be moved in at least one of a leftward direction and a rightward direction relative to the movable platform." Support for the amendments to claim 9 may be found in Figs. 1, 2A-2B, 3A-3B, 4A-4B of the specification.

As previously mentioned, Clark does not teach or suggest the combination of features of claim 9. For example, Clark does not teach or suggest a cart with a height adjustment mechanism for adjusting a height of the work platform relative to the base, "wherein the movable platform and the work surface are disposed above a top of the at least one compartment." Thus, Clark does not disclose the cart with the movable work surface and movable work platform of claim 9.

Manalang do not cure the deficiency of Clark because this reference does not disclose a height-adjustable work platform with a movable work surface and a movable work platform located above a compartment. Manalang simply discloses a medical cart with a sliding tray 26 but no height adjustment mechanism for adjusting a height of the work platform relative to the base. Because Clark and Manalang do not teach or suggest a cart with a height-adjustable work platform with a movable work surface and a movable work platform located above a compartment, claim 9 is allowable over Clark and Manalang.

Claims 10-15 depends from claim 9, and are allowable by virtue of their dependency from claim 9, without regard to the further patentable features contained therein.

For at least these reasons, favorable reconsideration of the rejection is respectfully requested.

Conclusion

Applicants believe that the present application is now in condition for allowance. Favorable reconsideration of the application as amended is respectfully requested.

The Examiner is invited to contact the undersigned by telephone if it is felt that a telephone interview would advance the prosecution of the present application.

The Commissioner is hereby authorized to charge any additional fees which may be required regarding this application under 37 C.F.R. §§ 1.16-1.17, or credit any overpayment, to Deposit Account No. 19-0741. Should no proper payment be enclosed herewith, as by the credit card payment instructions in EFS-Web being incorrect or absent, resulting in a rejected or incorrect credit card transaction, the Commissioner is authorized to charge the unpaid amount to Deposit Account No. 19-0741. If any extensions of time are needed for timely acceptance of papers submitted herewith, Applicants hereby petition for such extension under 37 C.F.R. §1.136 and authorize payment of any such extensions fees to Deposit Account No. 19-0741.

Respectfully submitted,

Date 3/28/2012

By

FOLEY & LARDNER LLP
Customer Number: 22428
Telephone: (202) 295-4075
Facsimile: (202) 672-5399

Matthew J. Kremer
Attorney for Applicants
Registration No. 58,671

ABSTRACT

A medical cart ~~is described and~~ includes a work platform having a work surface and at least one compartment, a base, and a height adjustment mechanism for adjusting the height of the work platform relative to the base. A medication module ~~is described and~~ includes a plurality of compartments. The medical cart can be joined with a medication module. In addition, a plurality of medication modules can be joined to form a train. The medical cart and medication module can be used collectively and individually in a variety of methods for transferring medicine.

Electronic Acknowledgement Receipt

EFS ID:	12411836
Application Number:	13187328
International Application Number:	
Confirmation Number:	6052
Title of Invention:	MEDICAL CART, MEDICATION MODULE, HEIGHT ADJUSTMENT MECHANISM, AND METHOD OF MEDICATION TRANSPORT
First Named Inventor/Applicant Name:	Radmond Vincent ARCETA
Customer Number:	22428
Filer:	Matthew J. Kremer/Carolynn Mallard-Robinson
Filer Authorized By:	Matthew J. Kremer
Attorney Docket Number:	086554-1553
Receipt Date:	28-MAR-2012
Filing Date:	20-JUL-2011
Time Stamp:	14:25:47
Application Type:	Utility under 35 USC 111(a)

Payment information:

Submitted with Payment	no

File Listing:

Document Number	Document Description	File Name	File Size(Bytes)/ Message Digest	Multi Part /.zip	Pages (if appl.)
1		Reply.pdf	297021 9d23b014b6371b496ba97e2a548f33a0340dcc8e	yes	14

	Multipart Description/PDF files in .zip description		
	Document Description	**Start**	**End**
	Amendment/Req. Reconsideration-After Non-Final Reject	1	1
	Claims	2	6
	Applicant Arguments/Remarks Made in an Amendment	7	13
	Abstract	14	14
Warnings:			
Information:			
	Total Files Size (in bytes):	297021	

This Acknowledgement Receipt evidences receipt on the noted date by the USPTO of the indicated documents, characterized by the applicant, and including page counts, where applicable. It serves as evidence of receipt similar to a Post Card, as described in MPEP 503.

<u>New Applications Under 35 U.S.C. 111</u>
If a new application is being filed and the application includes the necessary components for a filing date (see 37 CFR 1.53(b)-(d) and MPEP 506), a Filing Receipt (37 CFR 1.54) will be issued in due course and the date shown on this Acknowledgement Receipt will establish the filing date of the application.

<u>National Stage of an International Application under 35 U.S.C. 371</u>
If a timely submission to enter the national stage of an international application is compliant with the conditions of 35 U.S.C. 371 and other applicable requirements a Form PCT/DO/EO/903 indicating acceptance of the application as a national stage submission under 35 U.S.C. 371 will be issued in addition to the Filing Receipt, in due course.

<u>New International Application Filed with the USPTO as a Receiving Office</u>
If a new international application is being filed and the international application includes the necessary components for an international filing date (see PCT Article 11 and MPEP 1810), a Notification of the International Application Number and of the International Filing Date (Form PCT/RO/105) will be issued in due course, subject to prescriptions concerning national security, and the date shown on this Acknowledgement Receipt will establish the international filing date of the application.

PTO/SB/06 (07-06)
Approved for use through 1/31/2007. OMB 0651-0032
U.S. Patent and Trademark Office; U.S. DEPARTMENT OF COMMERCE
Under the Paperwork Reduction Act of 1995, no persons are required to respond to a collection of information unless it displays a valid OMB control number.

PATENT APPLICATION FEE DETERMINATION RECORD

Substitute for Form PTO-875

Application or Docket Number	Filing Date	
13/187,328	07/20/2011	☐ To be Mailed

APPLICATION AS FILED – PART I

FOR	(Column 1) NUMBER FILED	(Column 2) NUMBER EXTRA	SMALL ENTITY ☐ RATE ($)	SMALL ENTITY FEE ($)	OR	OTHER THAN SMALL ENTITY RATE ($)	OTHER THAN SMALL ENTITY FEE ($)
☐ BASIC FEE (37 CFR 1.16(a), (b), or (c))	N/A	N/A	N/A			N/A	
☐ SEARCH FEE (37 CFR 1.16(k), (i), or (m))	N/A	N/A	N/A			N/A	
☐ EXAMINATION FEE (37 CFR 1.16(o), (p), or (q))	N/A	N/A	N/A			N/A	
TOTAL CLAIMS (37 CFR 1.16(i))	minus 20 =	*	X $ =		OR	X $ =	
INDEPENDENT CLAIMS (37 CFR 1.16(h))	minus 3 =	*	X $ =			X $ =	
☐ APPLICATION SIZE FEE (37 CFR 1.16(s))	If the specification and drawings exceed 100 sheets of paper, the application size fee due is $250 ($125 for small entity) for each additional 50 sheets or fraction thereof. See 35 U.S.C. 41(a)(1)(G) and 37 CFR 1.16(s).						
☐ MULTIPLE DEPENDENT CLAIM PRESENT (37 CFR 1.16(j))							
			TOTAL			TOTAL	

* If the difference in column 1 is less than zero, enter "0" in column 2.

APPLICATION AS AMENDED – PART II

AMENDMENT 03/28/2012	(Column 1) CLAIMS REMAINING AFTER AMENDMENT		(Column 2) HIGHEST NUMBER PREVIOUSLY PAID FOR	(Column 3) PRESENT EXTRA	SMALL ENTITY RATE ($)	SMALL ENTITY ADDITIONAL FEE ($)	OR	OTHER THAN SMALL ENTITY RATE ($)	OTHER THAN SMALL ENTITY ADDITIONAL FEE ($)
Total (37 CFR 1.16(i))	* 24	Minus	** 24	= 0	X $ =		OR	X $60=	0
Independent (37 CFR 1.16(h))	* 3	Minus	***3	= 0	X $ =		OR	X $250=	0
☐ Application Size Fee (37 CFR 1.16(s))									
☐ FIRST PRESENTATION OF MULTIPLE DEPENDENT CLAIM (37 CFR 1.16(j))							OR		
					TOTAL ADD'L FEE		OR	TOTAL ADD'L FEE	0

AMENDMENT	(Column 1) CLAIMS REMAINING AFTER AMENDMENT		(Column 2) HIGHEST NUMBER PREVIOUSLY PAID FOR	(Column 3) PRESENT EXTRA	RATE ($)	ADDITIONAL FEE ($)		RATE ($)	ADDITIONAL FEE ($)
Total (37 CFR 1.16(i))	*	Minus	**	=	X $ =		OR	X $ =	
Independent (37 CFR 1.16(h))	*	Minus	***	=	X $ =		OR	X $ =	
☐ Application Size Fee (37 CFR 1.16(s))									
☐ FIRST PRESENTATION OF MULTIPLE DEPENDENT CLAIM (37 CFR 1.16(j))							OR		
					TOTAL ADD'L FEE		OR	TOTAL ADD'L FEE	

* If the entry in column 1 is less than the entry in column 2, write "0" in column 3.

** If the "Highest Number Previously Paid For" IN THIS SPACE is less than 20, enter "20".

*** If the "Highest Number Previously Paid For" IN THIS SPACE is less than 3, enter "3".

The "Highest Number Previously Paid For" (Total or Independent) is the highest number found in the appropriate box in column 1.

Legal Instrument Examiner:
/REGINA D. BALTIMORE/

This collection of information is required by 37 CFR 1.16. The information is required to obtain or retain a benefit by the public which is to file (and by the USPTO to process) an application. Confidentiality is governed by 35 U.S.C. 122 and 37 CFR 1.14. This collection is estimated to take 12 minutes to complete, including gathering, preparing, and submitting the completed application form to the USPTO. Time will vary depending upon the individual case. Any comments on the amount of time you require to complete this form and/or suggestions for reducing this burden, should be sent to the Chief Information Officer, U.S. Patent and Trademark Office, U.S. Department of Commerce, P.O. Box 1450, Alexandria, VA 22313-1450. DO NOT SEND FEES OR COMPLETED FORMS TO THIS ADDRESS. **SEND TO: Commissioner for Patents, P.O. Box 1450, Alexandria, VA 22313-1450.**

If you need assistance in completing the form, call 1-800-PTO-9199 and select option 2.

PTO/SB/06 (07-06)
Approved for use through 1/31/2007. OMB 0651-0032
U.S. Patent and Trademark Office; U.S. DEPARTMENT OF COMMERCE
Under the Paperwork Reduction Act of 1995, no persons are required to respond to a collection of information unless it displays a valid OMB control number.

PATENT APPLICATION FEE DETERMINATION RECORD

Substitute for Form PTO-875

Application or Docket Number	Filing Date	☒ To be Mailed
13/187,328	07/20/2011	

APPLICATION AS FILED – PART I

FOR	(Column 1) NUMBER FILED	(Column 2) NUMBER EXTRA	SMALL ENTITY ☐ RATE ($)	SMALL ENTITY FEE ($)	OR	OTHER THAN SMALL ENTITY RATE ($)	OTHER THAN SMALL ENTITY FEE ($)
☐ BASIC FEE (37 CFR 1.16(a), (b), or (c))	N/A	N/A	N/A			N/A	
☐ SEARCH FEE (37 CFR 1.16(k), (i), or (m))	N/A	N/A	N/A			N/A	
☐ EXAMINATION FEE (37 CFR 1.16(o), (p), or (q))	N/A	N/A	N/A			N/A	
TOTAL CLAIMS (37 CFR 1.16(i))	minus 20 =	*	X $ =		OR	X $ =	
INDEPENDENT CLAIMS (37 CFR 1.16(h))	minus 3 =	*	X $ =			X $ =	
☐ APPLICATION SIZE FEE (37 CFR 1.16(s))	If the specification and drawings exceed 100 sheets of paper, the application size fee due is $250 ($125 for small entity) for each additional 50 sheets or fraction thereof. See 35 U.S.C. 41(a)(1)(G) and 37 CFR 1.16(s).						
☐ MULTIPLE DEPENDENT CLAIM PRESENT (37 CFR 1.16(j))							
* If the difference in column 1 is less than zero, enter "0" in column 2.			TOTAL			TOTAL	

APPLICATION AS AMENDED – PART II

AMENDMENT 03/28/2012	(Column 1) CLAIMS REMAINING AFTER AMENDMENT		(Column 2) HIGHEST NUMBER PREVIOUSLY PAID FOR	(Column 3) PRESENT EXTRA	SMALL ENTITY RATE ($)	SMALL ENTITY ADDITIONAL FEE ($)	OR	OTHER THAN SMALL ENTITY RATE ($)	OTHER THAN SMALL ENTITY ADDITIONAL FEE ($)
Total (37 CFR 1.16(i))	* 24	Minus	** 20	= 4	X $ =		OR	X $60=	240
Independent (37 CFR 1.16(h))	* 3	Minus	***3	= 0	X $ =		OR	X $250=	0
☐ Application Size Fee (37 CFR 1.16(s))									
☐ FIRST PRESENTATION OF MULTIPLE DEPENDENT CLAIM (37 CFR 1.16(j))							OR		
					TOTAL ADD'L FEE		OR	TOTAL ADD'L FEE	**240**

AMENDMENT	(Column 1) CLAIMS REMAINING AFTER AMENDMENT		(Column 2) HIGHEST NUMBER PREVIOUSLY PAID FOR	(Column 3) PRESENT EXTRA	RATE ($)	ADDITIONAL FEE ($)		RATE ($)	ADDITIONAL FEE ($)
Total (37 CFR 1.16(i))	*	Minus	**	=	X $ =		OR	X $ =	
Independent (37 CFR 1.16(h))	*	Minus	***	=	X $ =		OR	X $ =	
☐ Application Size Fee (37 CFR 1.16(s))									
☐ FIRST PRESENTATION OF MULTIPLE DEPENDENT CLAIM (37 CFR 1.16(j))							OR		
					TOTAL ADD'L FEE		OR	TOTAL ADD'L FEE	

* If the entry in column 1 is less than the entry in column 2, write "0" in column 3.

** If the "Highest Number Previously Paid For" IN THIS SPACE is less than 20, enter "20".

*** If the "Highest Number Previously Paid For" IN THIS SPACE is less than 3, enter "3".

The "Highest Number Previously Paid For" (Total or Independent) is the highest number found in the appropriate box in column 1.

Legal Instrument Examiner:
/MONICA FRANCIS/

This collection of information is required by 37 CFR 1.16. The information is required to obtain or retain a benefit by the public which is to file (and by the USPTO to process) an application. Confidentiality is governed by 35 U.S.C. 122 and 37 CFR 1.14. This collection is estimated to take 12 minutes to complete, including gathering, preparing, and submitting the completed application form to the USPTO. Time will vary depending upon the individual case. Any comments on the amount of time you require to complete this form and/or suggestions for reducing this burden, should be sent to the Chief Information Officer, U.S. Patent and Trademark Office, U.S. Department of Commerce, P.O. Box 1450, Alexandria, VA 22313-1450. DO NOT SEND FEES OR COMPLETED FORMS TO THIS ADDRESS. **SEND TO: Commissioner for Patents, P.O. Box 1450, Alexandria, VA 22313-1450.**

If you need assistance in completing the form, call 1-800-PTO-9199 and select option 2.

UNITED STATES PATENT AND TRADEMARK OFFICE

UNITED STATES DEPARTMENT OF COMMERCE
United States Patent and Trademark Office
Address: COMMISSIONER FOR PATENTS
P.O. Box 1450
Alexandria, Virginia 22313-1450
www.uspto.gov

APPLICATION NO.	FILING DATE	FIRST NAMED INVENTOR	ATTORNEY DOCKET NO.	CONFIRMATION NO.
13/187,328	07/20/2011	Radmond Vincent ARCETA	086554-1553	6052

22428 7590 03/21/2012
FOLEY AND LARDNER LLP
SUITE 500
3000 K STREET NW
WASHINGTON, DC 20007

EXAMINER
VANAMAN, FRANK BENNETT

ART UNIT	PAPER NUMBER
3618	

MAIL DATE	DELIVERY MODE
03/21/2012	PAPER

Please find below and/or attached an Office communication concerning this application or proceeding.

The time period for reply, if any, is set in the attached communication.

PTOL-90A (Rev. 04/07)

Applicant-Initiated Interview Summary	Application No.	Applicant(s)	
	13/187,328	ARCETA ET AL.	
	Examiner	Art Unit	
	FRANK VANAMAN	3618	

All participants (applicant, applicant's representative, PTO personnel):

(1) *Frank Vanaman*.

(2) *Matthew Kremer*.

(3) *Kevin Fitzpatrick*.

(4) *Chad Holzshu*.

Date of Interview: *20 March 2012*.

Type: ☒ Telephonic ☐ Video Conference
☐ Personal [copy given to: ☐ applicant ☐ applicant's representative]

Exhibit shown or demonstration conducted: ☐ Yes ☒ No.
If Yes, brief description: _____.

Issues Discussed ☐101 ☐112 ☐102 ☒103 ☐Others
(For each of the checked box(es) above, please describe below the issue and detailed description of the discussion)

Claim(s) discussed: *1,9 and 16*.

Identification of prior art discussed: _____.

Substance of Interview
(For each issue discussed, provide a detailed description and indicate if agreement was reached. Some topics may include: identification or clarification of a reference or a portion thereof, claim interpretation, proposed amendments, arguments of any applied references etc...)

See Continuation Sheet.

Applicant recordation instructions: The formal written reply to the last Office action must include the substance of the interview. (See MPEP section 713.04). If a reply to the last Office action has already been filed, applicant is given a non-extendable period of the longer of one month or thirty days from this interview date, or the mailing date of this interview summary form, whichever is later, to file a statement of the substance of the interview

Examiner recordation instructions: Examiners must summarize the substance of any interview of record. A complete and proper recordation of the substance of an interview should include the items listed in MPEP 713.04 for complete and proper recordation including the identification of the general thrust of each argument or issue discussed, a general indication of any other pertinent matters discussed regarding patentability and the general results or outcome of the interview, to include an indication as to whether or not agreement was reached on the issues raised.

☐ Attachment

/Frank B Vanaman/ Primary Examiner, Art Unit 3618	

Summary of Record of Interview Requirements

Manual of Patent Examining Procedure (MPEP), Section 713.04, Substance of Interview Must be Made of Record
A complete written statement as to the substance of any face-to-face, video conference, or telephone interview with regard to an application must be made of record in the application whether or not an agreement with the examiner was reached at the interview.

Title 37 Code of Federal Regulations (CFR) § 1.133 Interviews
Paragraph (b)

In every instance where reconsideration is requested in view of an interview with an examiner, a complete written statement of the reasons presented at the interview as warranting favorable action must be filed by the applicant. An interview does not remove the necessity for reply to Office action as specified in §§ 1.111, 1.135. (35 U.S.C. 132)

37 CFR §1.2 Business to be transacted in writing.
All business with the Patent or Trademark Office should be transacted in writing. The personal attendance of applicants or their attorneys or agents at the Patent and Trademark Office is unnecessary. The action of the Patent and Trademark Office will be based exclusively on the written record in the Office. No attention will be paid to any alleged oral promise, stipulation, or understanding in relation to which there is disagreement or doubt.

The action of the Patent and Trademark Office cannot be based exclusively on the written record in the Office if that record is itself incomplete through the failure to record the substance of interviews.

It is the responsibility of the applicant or the attorney or agent to make the substance of an interview of record in the application file, unless the examiner indicates he or she will do so. It is the examiner's responsibility to see that such a record is made and to correct material inaccuracies which bear directly on the question of patentability.

Examiners must complete an Interview Summary Form for each interview held where a matter of substance has been discussed during the interview by checking the appropriate boxes and filling in the blanks. Discussions regarding only procedural matters, directed solely to restriction requirements for which interview recordation is otherwise provided for in Section 812.01 of the Manual of Patent Examining Procedure, or pointing out typographical errors or unreadable script in Office actions or the like, are excluded from the interview recordation procedures below. Where the substance of an interview is completely recorded in an Examiners Amendment, no separate Interview Summary Record is required.

The Interview Summary Form shall be given an appropriate Paper No., placed in the right hand portion of the file, and listed on the "Contents" section of the file wrapper. In a personal interview, a duplicate of the Form is given to the applicant (or attorney or agent) at the conclusion of the interview. In the case of a telephone or video-conference interview, the copy is mailed to the applicant's correspondence address either with or prior to the next official communication. If additional correspondence from the examiner is not likely before an allowance or if other circumstances dictate, the Form should be mailed promptly after the interview rather than with the next official communication.

The Form provides for recordation of the following information:
- Application Number (Series Code and Serial Number)
- Name of applicant
- Name of examiner
- Date of interview
- Type of interview (telephonic, video-conference, or personal)
- Name of participant(s) (applicant, attorney or agent, examiner, other PTO personnel, etc.)
- An indication whether or not an exhibit was shown or a demonstration conducted
- An identification of the specific prior art discussed
- An indication whether an agreement was reached and if so, a description of the general nature of the agreement (may be by attachment of a copy of amendments or claims agreed as being allowable). Note: Agreement as to allowability is tentative and does not restrict further action by the examiner to the contrary.
- The signature of the examiner who conducted the interview (if Form is not an attachment to a signed Office action)

It is desirable that the examiner orally remind the applicant of his or her obligation to record the substance of the interview of each case. It should be noted, however, that the Interview Summary Form will not normally be considered a complete and proper recordation of the interview unless it includes, or is supplemented by the applicant or the examiner to include, all of the applicable items required below concerning the substance of the interview.

A complete and proper recordation of the substance of any interview should include at least the following applicable items:
1) A brief description of the nature of any exhibit shown or any demonstration conducted,
2) an identification of the claims discussed,
3) an identification of the specific prior art discussed,
4) an identification of the principal proposed amendments of a substantive nature discussed, unless these are already described on the Interview Summary Form completed by the Examiner,
5) a brief identification of the general thrust of the principal arguments presented to the examiner,
   (The identification of arguments need not be lengthy or elaborate. A verbatim or highly detailed description of the arguments is not required. The identification of the arguments is sufficient if the general nature or thrust of the principal arguments made to the examiner can be understood in the context of the application file. Of course, the applicant may desire to emphasize and fully describe those arguments which he or she feels were or might be persuasive to the examiner.)
6) a general indication of any other pertinent matters discussed, and
7) if appropriate, the general results or outcome of the interview unless already described in the Interview Summary Form completed by the examiner.

Examiners are expected to carefully review the applicant's record of the substance of an interview. If the record is not complete and accurate, the examiner will give the applicant an extendable one month time period to correct the record.

Examiner to Check for Accuracy

If the claims are allowable for other reasons of record, the examiner should send a letter setting forth the examiner's version of the statement attributed to him or her. If the record is complete and accurate, the examiner should place the indication, "Interview Record OK" on the paper recording the substance of the interview along with the date and the examiner's initials.

Continuation of Substance of Interview including description of the general nature of what was agreed to if an agreement was reached, or any other comments: The inventive cart was briefly discussed with a view to the specific elements constituting the various movable work surfaces at the top of the cart (elements 370 and 350). Further, applicant has tentatively proposed amending each of the independent claims to include:

a. [claim 1]: "wherein the work surface is disposed above a top of the at least one compartment…wherein the work surface is movable relative to a remainder of the work platform from an extended position to a non-extended position"

b. [claim 9]: "wherein the movable platform and the work surface are disposed above a top of the at least one compartment."

c. [claim 16]: "wherein the secondary work surface and the movable platform are positioned above a top of the at least one compartment."

The examiner commented that as regards the proposed amendment to claim 1, that the combined base and modifying references (e.g., Clark et al. and Rice et al.) would not reasonably meet a claim with these further limitations. As regards the claims initially including some recitations directed to movable work surfaces (which claim 1 initially did not include), the examiner noted that currently the critical modifying reference would be the reference to Ellefson, and there was some further discussion directed to the structural compatability of the Ellefson reference, with the examiner suggesting that in combination with the amendment, an argument directed to the structural issues associated with the combination of Clark et al. and Ellefson would likely be persuasive in overcoming the rejections as currently set forth.

UNITED STATES PATENT AND TRADEMARK OFFICE

UNITED STATES DEPARTMENT OF COMMERCE
United States Patent and Trademark Office
Address: COMMISSIONER FOR PATENTS
P.O. Box 1450
Alexandria, Virginia 22313-1450
www.uspto.gov

APPLICATION NO.	FILING DATE	FIRST NAMED INVENTOR	ATTORNEY DOCKET NO.	CONFIRMATION NO.
13/187,328	07/20/2011	Radmond Vincent ARCETA	086554-1553	6052

22428 7590 01/12/2012
FOLEY AND LARDNER LLP
SUITE 500
3000 K STREET NW
WASHINGTON, DC 20007

EXAMINER
VANAMAN, FRANK BENNETT

ART UNIT	PAPER NUMBER
3618	

MAIL DATE	DELIVERY MODE
01/12/2012	PAPER

Please find below and/or attached an Office communication concerning this application or proceeding.

The time period for reply, if any, is set in the attached communication.

PTOL-90A (Rev. 04/07)

Office Action Summary	Application No.	Applicant(s)	
	13/187,328	ARCETA ET AL.	
	Examiner	Art Unit	
	FRANK VANAMAN	3618	

-- The MAILING DATE of this communication appears on the cover sheet with the correspondence address --

Period for Reply

A SHORTENED STATUTORY PERIOD FOR REPLY IS SET TO EXPIRE 3 MONTH(S) OR THIRTY (30) DAYS, WHICHEVER IS LONGER, FROM THE MAILING DATE OF THIS COMMUNICATION.

- Extensions of time may be available under the provisions of 37 CFR 1.136(a). In no event, however, may a reply be timely filed after SIX (6) MONTHS from the mailing date of this communication.
- If NO period for reply is specified above, the maximum statutory period will apply and will expire SIX (6) MONTHS from the mailing date of this communication.
- Failure to reply within the set or extended period for reply will, by statute, cause the application to become ABANDONED (35 U.S.C. § 133). Any reply received by the Office later than three months after the mailing date of this communication, even if timely filed, may reduce any earned patent term adjustment. See 37 CFR 1.704(b).

Status

1)☐ Responsive to communication(s) filed on _____.

2a)☐ This action is **FINAL**. 2b)☒ This action is non-final.

3)☐ An election was made by the applicant in response to a restriction requirement set forth during the interview on _____; the restriction requirement and election have been incorporated into this action.

4)☐ Since this application is in condition for allowance except for formal matters, prosecution as to the merits is closed in accordance with the practice under *Ex parte Quayle*, 1935 C.D. 11, 453 O.G. 213.

Disposition of Claims

5)☒ Claim(s) *1-24* is/are pending in the application.

5a) Of the above claim(s) _____ is/are withdrawn from consideration.

6)☐ Claim(s) _____ is/are allowed.

7)☒ Claim(s) *1-24* is/are rejected.

8)☐ Claim(s) _____ is/are objected to.

9)☐ Claim(s) _____ are subject to restriction and/or election requirement.

Application Papers

10)☒ The specification is objected to by the Examiner.

11)☐ The drawing(s) filed on _____ is/are: a)☐ accepted or b)☐ objected to by the Examiner.

Applicant may not request that any objection to the drawing(s) be held in abeyance. See 37 CFR 1.85(a).

Replacement drawing sheet(s) including the correction is required if the drawing(s) is objected to. See 37 CFR 1.121(d).

12)☐ The oath or declaration is objected to by the Examiner. Note the attached Office Action or form PTO-152.

Priority under 35 U.S.C. § 119

13)☐ Acknowledgment is made of a claim for foreign priority under 35 U.S.C. § 119(a)-(d) or (f).

a)☐ All b)☐ Some * c)☐ None of:

1.☐ Certified copies of the priority documents have been received.

2.☐ Certified copies of the priority documents have been received in Application No. _____.

3.☐ Copies of the certified copies of the priority documents have been received in this National Stage application from the International Bureau (PCT Rule 17.2(a)).

* See the attached detailed Office action for a list of the certified copies not received.

Attachment(s)

1) ☒ Notice of References Cited (PTO-892)

2) ☐ Notice of Draftsperson's Patent Drawing Review (PTO-948)

3) ☒ Information Disclosure Statement(s) (PTO/SB/08) Paper No(s)/Mail Date *7/20/11, 12/8/11*.

4) ☐ Interview Summary (PTO-413) Paper No(s)/Mail Date. _____ .

5) ☐ Notice of Informal Patent Application

6) ☐ Other: _____.

Information Disclosure Statement

1. Applicant's Information Disclosure Statements, filed on July 20, 2011 and Dec. 8, 2011 are acknowledged and have been considered.

Specification

2. The abstract of the disclosure is objected to because the phrase "is described" is redundant in an abstract of the disclosure and should be deleted. Correction is required. See MPEP § 608.01(b).

Double Patenting

3. The nonstatutory double patenting rejection is based on a judicially created doctrine grounded in public policy (a policy reflected in the statute) so as to prevent the unjustified or improper timewise extension of the "right to exclude" granted by a patent and to prevent possible harassment by multiple assignees. A nonstatutory obviousness-type double patenting rejection is appropriate where the conflicting claims are not identical, but at least one examined application claim is not patentably distinct from the reference claim(s) because the examined application claim is either anticipated by, or would have been obvious over, the reference claim(s). See, e.g., *In re Berg*, 140 F.3d 1428, 46 USPQ2d 1226 (Fed. Cir. 1998); *In re Goodman*, 11 F.3d 1046, 29 USPQ2d 2010 (Fed. Cir. 1993); *In re Longi*, 759 F.2d 887, 225 USPQ 645 (Fed. Cir. 1985); *In re Van Ornum*, 686 F.2d 937, 214 USPQ 761 (CCPA 1982); *In re Vogel*, 422 F.2d 438, 164 USPQ 619 (CCPA 1970); and *In re Thorington*, 418 F.2d 528, 163 USPQ 644 (CCPA 1969).

A timely filed terminal disclaimer in compliance with 37 CFR 1.321(c) or 1.321(d) may be used to overcome an actual or provisional rejection based on a nonstatutory double patenting ground provided the conflicting application or patent either is shown to be commonly owned with this application, or claims an invention made as a result of activities undertaken within the scope of a joint research agreement.

Effective January 1, 1994, a registered attorney or agent of record may sign a terminal disclaimer. A terminal disclaimer signed by the assignee must fully comply with 37 CFR 3.73(b).

4. Claims 1-5, 9-11, 13-16, 18, 23 and 24 are rejected on the ground of nonstatutory obviousness-type double patenting as being unpatentable over claims 1-7 of U.S. Patent No. 7,594,668. Although the conflicting claims are not identical, they are not patentably distinct from each other because the elements which are claimed, while some have different names, are structurally indistinct (e.g., the same element referred to as a movable platform in one claim may be referred to as a laptop platform in another, the difference being in an intended use, or non-structural characteristic, but which is not patentably distinct). Also note that the claims of the '668 patent are in some ways narrower than the claims of the instant application, however it is well established that a species claim covers a genus claim or a claim having elements recited to a broader scope.

Claim Rejections - 35 USC § 103

5. The following is a quotation of 35 U.S.C. 103(a) which forms the basis for all obviousness rejections set forth in this Office action:

> (a) A patent may not be obtained though the invention is not identically disclosed or described as set forth in section 102 of this title, if the differences between the subject matter sought to be patented and the prior art are such that the subject matter as a whole would have been obvious at the time the invention was made to a person having ordinary skill in the art to which said subject matter pertains. Patentability shall not be negatived by the manner in which the invention was made.

6. Claims 1, 2, 3, 5, 6 and 8 are rejected under 35 U.S.C. 103(a) as being unpatentable over Clark et al. (US 6,721,178) in view of Rice et al. (US 4,440,496). Clark et al. teach a cart (10 in general) having a work platform (86) and at least one compartment (below 86, above 70) for containing an item (positionable on 70, for example), a base (78a, 89b) configured to be movable in forward and rearward directions, a height adjustment mechanism (22 in general) configured to position the work surface at one of a plurality of heights (see figures 2a, 2b, 2c, 2d), including a stationary casing forming a first fixed telescopic part (74) connected to the base, a movable casing forming a second, movable telescopic part (72) which moves vertically with respect to the first casing, the casings relative position locked or unlocked by a driver element (see col. 9, lines 57-58) which is in turn operated by an actuator (42) located on the work platform, above a bottom of the compartment, the work platform

and base both including portions which project both forwardly and rearwardly of the location of the actuator, the compartment being accessible on a front face to a user facing the rear (e.g., away from the viewer, figures 4a, 4b), a movable platform (70) which can be moved in a forward and rearward direction (compare figures 4a, 4b), and a secondary work surface (upward facing side of the bottom wall of 12, revealed in figure 4b), the secondary work surface and movable platform (70) both being exposed when the platform moves in one of the forward and rearward directions (i.e., the resulting condition in figure 4b), the secondary work surface being arranged so as to be vertically aligned with the movable platform (figure 4a), and located beneath the movable platform. The reference to Clark et al. fails to specifically teach that the actuator is disposed above the compartment on the on a portion of the work platform which projects in a forward direction. Rice et al. teach that it is known in the provision of height adjustment mechanisms for support surfaces (e.g., 16, 18) to be desirable to place controls for a height adjustment mechanism (e.g., 30) proximate a top of the support surface, rather than underneath the support surface. As such, it would have been obvious to one of ordinary skill in the art at the time of the invention to move the height adjustment mechanism (42) taught by Clark et al. to a raised position (e.g., proximate the top of the work platform 86, rather than under it), following the suggestion of Rice et al., for the purpose of providing improved access to the adjustment actuator (e.g., so that a user may immediately locate and operate the actuator, rather than having to first locate an aperture on a side of the cart, and then attempt to engage an otherwise hidden actuator control -- note Clark et al., figure 5B).

7. Claim 4 is rejected under 35 U.S.C. 103(a) as being unpatentable over Clark et al. in view of Rice et al. and Murphy et al. (US 6,626,445). The reference to Clark et al. as modified by Rice et al. is discussed above and fails to teach a handle projecting in a forward direction, with the actuator located on the handle. Initially, Murphy et al. teach that in a cart, it is desirable to provide a handle (e.g., 92) proximate a work platform (e.g., 126) where the handle protrudes in a forward direction (see figure 2). Initially, it would have been obvious to one of ordinary skill in the art at the time of the invention to provide a handle such as taught by Murphy et al. to the forward facing portion of the

work platform for the well-known purpose of providing a means for a user to grip the cart and assist in its maneuvering. Further, it is very well known across numerous art areas to provide an actuation control in a handle to facilitate single-hand manipulation of an item or object, and it would have been obvious to one of ordinary skill in the art at the time of the invention to provide the actuator on the handle to facilitate a user being able to simultaneously control the actuator for changing height and maneuver the cart with one hand.

8. Claim 7 is rejected under 35 U.S.C. 103(a) as being unpatentable over Clark et al. in view of Rice et al. and Ellefson (US 4,976,450). The reference to Clark et al. as modified by Rice et al. is discussed above and fails to teach the provision of a work surface which can move in one of left and right directions along an arcuate path facing a forward direction. Ellefson teaches that it is well known in a cart structure to provide at least one work surface (one of 48, 50, 52) which surfaces travel in arcuate directions to left and/or right facing a forward direction (pivoting about selected pivot points 54, 56). It would have been obvious to one of ordinary skill in the art at the time of the invention to provide the cart taught by Clark et al. as modified by Rice et al. with at least one left-right movable work surface which follows an arcuate path as suggested by Ellefson for the purpose of providing a greater amount of surface area than is available on the platform initially taught by the base reference to Clark et al., facilitating a larger work-space for the user, and/or allowing more items to be placed on the cart.

9. Claims 9-24 are rejected under 35 U.S.C. 103(a) as being unpatentable over Clark et al. in view of Ellefson. Clark et al. teach a cart (10 in general) having a work platform (86) and at least one compartment (below 86, above 70) for containing an item (positionable on 70, for example), a base (78a, 89b) configured to be movable in forward and rearward directions, a height adjustment mechanism (22 in general) configured to position the work surface at one of a plurality of heights (see figures 2a, 2b, 2c, 2d), including a stationary casing forming a first fixed telescopic part (74) connected to the base, a movable casing forming a second, movable telescopic part (72) which moves vertically with respect to the first casing, the casings relative position locked or unlocked by a driver element (see col. 9, lines 57-58) which is in turn operated

by an actuator (42) located on the work platform, above a bottom of the compartment, the work platform and base both including portions which project both forwardly and rearwardly of the location of the actuator, the compartment being accessible on a front face to a user facing the rear (e.g., away from the viewer, figures 4a, 4b), a movable platform (70) which can be moved in a forward and rearward direction (compare figures 4a, 4b), and a secondary work surface (upward facing side of the bottom wall of 12, revealed in figure 4b), the secondary work surface and movable platform (70) both being exposed when the platform moves in one of the forward and rearward directions (i.e., the resulting condition in figure 4b), the secondary work surface being arranged so as to be vertically aligned with the movable platform (figure 4a), and located beneath the movable platform. The reference to Clark et al. fails to teach the provision of a further work surface which can move in one of left and right directions along an arcuate path facing a forward direction. Ellefson teaches that it is well known in a cart structure to provide at least one work surface (one of 48, 50, 52) which surfaces travel in arcuate directions to left and/or right facing a forward direction (pivoting about selected pivot points 54, 56) wherein at least one surface (such as 48) may be defined as extending through a slot as broadly claimed (formed by the portion of the cart there-below and the tray or work-surface 50 there-above). It would have been obvious to one of ordinary skill in the art at the time of the invention to provide the cart taught by Clark et al. with at least one left-right movable work surface which follows an arcuate path as suggested by Ellefson mounted, for example, below the work platform and movable platform (e.g., on the underside of element 12 in Clark et al.) for the purpose of providing a greater amount of surface area than is available on the platform initially taught by the base reference to Clark et al., facilitating a larger work-space for the user, and/or allowing more items to be placed on the cart.

As regards claims 14 and 23, while the base reference to Clark et al. teaches a single compartment, the reference fails to specifically teach plural compartments. It is very old and well known to duplicate an already-taught element for the purpose of enhancing or multiplying the effect of the element, and it would have been obvious to one of ordinary skill in the art at the time of the invention to provide the compartment as

a plurality of compartments (i.e., as a duplication or multiplication) for the purpose of being able to separately store plural items, or to be able to store a greater quantity of items.

As regards claims 15 and 24, the reference to Clark et al. as modified by Ellefson fails to specifically teach that the movable platform is a "laptop platform". In this case, the modifier "laptop" carries no further structural distinction, and as such, would be understood to constitute a recitation of intended use which does not patentably define beyond the structure which is presented by the references. As such, the movable platform taught by Clark et al. as modified by Ellefson is capable of performing as a “laptop platform”, in that a laptop may be placed thereon.

10. Claims 9-15 are rejected under 35 U.S.C. 103(a) as being unpatentable over Clark et al. in view of Ellefson and Manalang (US 2002/0165641). Alternatively to the rejection of claims 9-15 as covered by the application of the references to Clark et al. and Ellefson in the immediately preceding paragraph, in the event that the reference to Clark et al. as modified by Ellefson is found to not explicitly teach that the work surface moves through a slot provided in the platform which projects in the forward direction (such as may be formed between the work surface and the cart on one side and another work surface on the other), Manalang teaches that it is well known to provide an extensible work surface 26) which can move in a left and right direction (for a user standing proximate cart portions 32, 38, 40, 48, etc.) and which extends through a slot (in side 30 of housing 12). It would have been obvious to one of ordinary skill in the art at the time of the invention to provide the additional work surface as taught by Clark et al. as modified by Ellefson as movable in a slot as taught by Manalang, for example as formed in a side of the work platform taught by Clark et al., for the purpose of allowing the further work surface to be inconspicuously stowed when not in use (i.e., slid back within the slot), beneficially providing a low profile appearance.

Conclusion

11. The prior art made of record and not relied upon is considered pertinent to applicant's disclosure. Oye et al. (US 4,114,965) and Phoon et al. (US 6,339,732) teach cart structures of pertinence.

12. Any inquiry specifically concerning this communication or earlier communications from the examiner should be directed to F. Vanaman whose telephone number is 571-272-6701.

Any inquiries of a general nature or relating to the status of this application may be made through either Private PAIR or Public PAIR. Status information for unpublished applications is available through Private PAIR only. For more information about the PAIR system, see http://pair-direct.uspto.gov. Should you have questions on access to the Private PAIR system, contact the Electronic Business Center (EBC) at 866-217-9197 (toll-free).

A response to this action should be mailed to:
Mail Stop _____
Commissioner for Patents
P. O. Box 1450
Alexandria, VA 22313-1450,
Or faxed to:
PTO Central Fax: 571-273-8300

F. VANAMAN
Primary Examiner
Art Unit 3618

/Frank B Vanaman/
Primary Examiner, Art Unit 3618

Notice of References Cited	Application/Control No. 13/187,328	Applicant(s)/Patent Under Reexamination ARCETA ET AL.	
	Examiner FRANK VANAMAN	Art Unit 3618	Page 1 of 1

U.S. PATENT DOCUMENTS

*		Document Number Country Code-Number-Kind Code	Date MM-YYYY	Name	Classification
*	A	US-4,114,965	09-1978	Oye et al.	312/209
*	B	US-4,976,450	12-1990	Ellefson, Laurence M.	280/79.11
*	C	US-6,339,732	01-2002	Phoon et al.	700/237
	D	US-			
	E	US-			
	F	US-			
	G	US-			
	H	US-			
	I	US-			
	J	US-			
	K	US-			
	L	US-			
	M	US-			

FOREIGN PATENT DOCUMENTS

*		Document Number Country Code-Number-Kind Code	Date MM-YYYY	Country	Name	Classification
	N					
	O					
	P					
	Q					
	R					
	S					
	T					

NON-PATENT DOCUMENTS

*		Include as applicable: Author, Title Date, Publisher, Edition or Volume, Pertinent Pages)
	U	
	V	
	W	
	X	

*A copy of this reference is not being furnished with this Office action. (See MPEP § 707.05(a).)
Dates in MM-YYYY format are publication dates. Classifications may be US or foreign.

Search Notes	Application/Control No.	Applicant(s)/Patent Under Reexamination
	13187328	ARCETA ET AL.
	Examiner	**Art Unit**
	FRANK VANAMAN	3618

SEARCHED			
Class	**Subclass**	**Date**	**Examiner**
280	47.34, 47.35, 79.11, 79.2, 33.991, 33.992	1/10/12	FBV

SEARCH NOTES		
Search Notes	**Date**	**Examiner**

INTERFERENCE SEARCH			
Class	**Subclass**	**Date**	**Examiner**

PTO/SB/08 (09-06)
Approved for use through 03/31/2007. OMB 0651-0031
U.S. Patent and Trademark Office: U.S. DEPARTMENT OF COMMERCE

Under the Paperwork Reduction Act of 1995, no persons are required to respond to a collection of information unless it contains a valid OMB control number.

Substitute for form 1449/PTO

INFORMATION DISCLOSURE STATEMENT BY APPLICANT

Date Submitted: December 8, 2011

(use as many sheets as necessary)

Sheet	1	of	3

Complete if Known	
Application Number	13/187,328
Filing Date	7/20/2011
First Named Inventor	Radmond Vincent ARCETA
Art Unit	3618
Examiner Name	Frank Bennett Vanaman
Attorney Docket Number	086554-1553

U.S. PATENT DOCUMENTS

Examiner Initials*	Cite No.[1]	Document Number / Number-Kind Code[2] (*if known*)	Publication Date MM-DD-YYYY	Name of Patentee or Applicant of Cited Document	Pages, Columns, Lines, Where Relevant Passages or Relevant Figures Appear
	B1	D 146,375	02-18-1947	OBRIG	
	B2	D 240,629	07-20-1976	COPE	
	B3	D 349,594	08-09-1994	BONAZZA, CLAUDIO	
	B4	D 367,381	02-27-1996	LICARI, YAFFA	
	B5	D 387,168	12-02-1997	EDELMAN ET AL.	
	B6	D 389,917	01-27-1998	HORNBACK ET AL.	
	B7	D 390,733	02-17-1998	BRUNNER ET AL.	
	B8	D 402,529	12-15-1998	HUSTED, WAYNE	
	B9	D 410,230	05-25-1999	WITTE, KAY-UWE	
	B10	D 438,952	03-13-2001	CIMINO ET AL.	
	B11	D 441,513	05-01-2001	MULLEN ET AL.	
	B12	D 458,780-S	06-18-2002	SIEPMANN ET AL.	
	B13	D 459,477	06-25-2002	STOCKS ET AL.	
	B14	D 462,674-S	09-10-2002	SIEPMANN ET AL.	
	B15	D 465,895	11-19-2002	PFEFFERLE ET AL.	
	B16	D 468,420	01-07-2003	BOLMSJO, MAGNUS	
	B17	D 481,847	11-04-2003	VAN LANDINGHAM, JR., ALFRED RENEAU	
	B18	D 482,173	11-11-2003	VAN LANDINGHAM, JR., ALFRED RENEAU	
	B19	D 486,915	02-17-2004	WARSCHEWSKE ET AL.	
	B20	D 487,178	02-24-2004	CUZZOCREA, LAWRENCE A.	
	B21	D 497,462	10-19-2004	RYAN, BRADLEY PETER	
	B22	D 500,575	01-04-2005	LUCAS, TOMMIE	

UNPUBLISHED U.S. PATENT APPLICATION DOCUMENTS

Examiner Initials*	Cite No.[1]	U.S. Patent Application Document / Serial Number-Kind Code[2] (*if known*)	Filing Date of Cited Document MM-DD-YYYY	Name of Patentee or Applicant of Cited Document	Pages, Columns, Lines, Where Relevant Passages or Relevant Figures Appear

FOREIGN PATENT DOCUMENTS

Examiner Initials*	Cite No.[1]	Foreign Patent Document / Country Code[3]-Number[4]-Kind Code[5] (*if known*)	Publication Date MM-DD-YYYY	Name of Patentee or Applicant of Cited Documents	Pages, Columns, Lines, Where Relevant Passages or Relevant Figures Appear	T[6]

Examiner Signature	/Frank Vanaman/	Date Considered	01/10/2012

*EXAMINER: Initial if reference considered, whether or not citation is in conformance with MPEP 609. Draw line through citation if not in conformance and not considered. Include copy of this form with next communication to applicant. 1 Applicant's unique citation designation number (optional). 2 See Kinds Codes of USPTO Patent Documents at www.uspto.gov or MPEP 901.04. 3 Enter Office that issued the document, by the two-letter code (WIPO Standard ST.3). 4 For Japanese patent documents, the indication of the year of the reign of the Emperor must precede the serial number of the patent document. 5 Kind of document by the appropriate symbols as indicated on the document under WIPO Standard ST.16 if possible. 6 Applicant is to place a check mark here if English language Translation is attached.

This collection of information is required by 37 CFR 1.97 and 1.98. The information is required to obtain or retain a benefit by the public which is to file (and by the USPTO to process) an application. Confidentiality is governed by 35 U.S.C. 122 and 37 CFR 1.14. This collection is estimated to take 2 hours to complete, including gathering, preparing, and submitting the completed application form to the USPTO. Time will vary depending upon the individual case. Any comments on the amount of time you require to complete this form and/or suggestions for reducing this burden, should be sent to the Chief Information Officer, U.S. Patent and Trademark Office, P.O. Box 1450, Alexandria, VA 22313-1450. DO NOT SEND FEES OR COMPLETED FORMS TO THIS ADDRESS. **SEND TO: Commissioner for Patents, P.O. Box 1450, Alexandria, VA 22313-1450**.

If you need assistance in completing the form, call 1-800-PTO-9199 (1-800-786-9199) and select option 2.

4819-4947-2526.1

ALL REFERENCES CONSIDERED EXCEPT WHERE LINED THROUGH. /FV/

PTO/SB/08 (09-06)
Approved for use through 03/31/2007. OMB 0651-0031
U.S. Patent and Trademark Office: U.S. DEPARTMENT OF COMMERCE

Under the Paperwork Reduction Act of 1995, no persons are required to respond to a collection of information unless it contains a valid OMB control number.

Substitute for form 1449/PTO

INFORMATION DISCLOSURE STATEMENT BY APPLICANT

Date Submitted: December 8, 2011

(use as many sheets as necessary)

Sheet 2 of 3

Complete if Known	
Application Number	13/187,328
Filing Date	7/20/2011
First Named Inventor	Radmond Vincent ARCETA
Art Unit	3618
Examiner Name	Frank Bennett Vanaman
Attorney Docket Number	086554-1553

FOREIGN PATENT DOCUMENTS

Examiner Initials*	Cite No.[1]	Foreign Patent Document Country Code[3]-Number[4]-Kind Code[5] (*if known*)	Publication Date MM-DD-YYYY	Name of Patentee or Applicant of Cited Documents	Pages, Columns, Lines, Where Relevant Passages or Relevant Figures Appear	T[6]

NON PATENT LITERATURE DOCUMENTS

Examiner Initials*	Cite No.[1]	Include name of the author (in CAPITAL LETTERS), title of the article (when appropriate), title of the item (book, magazine, journal, serial, symposium, catalog, etc.) date, page(s), volume-issue number(s), publisher, city and/or country where published.	T[6]
	B23	**iCart PointofCare Brochure (Lionville), June 2004, 2 pages.**	
	B24	**Notice of Allowance dated July 7, 2005 received in corresponding U.S. Application 29/196,712.**	
	B25	**Notice of Allowance dated June 1, 2005 received in corresponding U.S. Application 29/196,714.**	
	B26	**Notice of Allowance dated May 31, 2005 received in corresponding U.S. Application 29/196,713.**	
	B27	**Notice of Allowance received in 12/193,346 (086554-1497) dated May 20, 2009.**	
	B28	**Office Action received in U.S. 10/783,030 (086554-1056) dated June 26, 2006.**	
	B29	**Office Action received in U.S. Application 10/783,030 (086554-1056) dated February 19, 2008.**	
	B30	**Office Action received in U.S. Application 10/783,030 (086554-1056) dated June 13, 2007**	
	B31	**Office Action dated January 28, 2011 received in corresponding U.S. Application 12/550,771 (086554-1544).**	
	B32	**Office Action dated June 24, 2011 received in corresponding U.S. Application 12/550,771 (086554-1544).**	

Examiner Signature	/Frank Vanaman/	Date Considered	01/10/2012

*EXAMINER: Initial if reference considered, whether or not citation is in conformance with MPEP 609. Draw line through citation if not in conformance and not considered. Include copy of this form with next communication to applicant. 1 Applicant's unique citation designation number (optional). 2 See Kinds Codes of USPTO Patent Documents at www.uspto.gov or MPEP 901.04. 3 Enter Office that issued the document, by the two-letter code (WIPO Standard ST.3). 4 For Japanese patent documents, the indication of the year of the reign of the Emperor must precede the serial number of the patent document. 5 Kind of document by the appropriate symbols as indicated on the document under WIPO Standard ST.16 if possible. 6 Applicant is to place a check mark here if English language Translation is attached.

This collection of information is required by 37 CFR 1.97 and 1.98. The information is required to obtain or retain a benefit by the public which is to file (and by the USPTO to process) an application. Confidentiality is governed by 35 U.S.C. 122 and 37 CFR 1.14. This collection is estimated to take 2 hours to complete, including gathering, preparing, and submitting the completed application form to the USPTO. Time will vary depending upon the individual case. Any comments on the amount of time you require to complete this form and/or suggestions for reducing this burden, should be sent to the Chief Information Officer, U.S. Patent and Trademark Office, P.O. Box 1450, Alexandria, VA 22313-1450. DO NOT SEND FEES OR COMPLETED FORMS TO THIS ADDRESS. **SEND TO: Commissioner for Patents, P.O. Box 1450, Alexandria, VA 22313-1450**.

If you need assistance in completing the form, call 1-800-PTO-9199 (1-800-786-9199) and select option 2.

4819-4947-2526.1

ALL REFERENCES CONSIDERED EXCEPT WHERE LINED THROUGH. /FV/

PTO/SB/08 (09-06)
Approved for use through 03/31/2007. OMB 0651-0031
U.S. Patent and Trademark Office: U.S. DEPARTMENT OF COMMERCE

Under the Paperwork Reduction Act of 1995, no persons are required to respond to a collection of information unless it contains a valid OMB control number.

Substitute for form 1449/PTO				Complete if Known	
INFORMATION DISCLOSURE STATEMENT BY APPLICANT				**Application Number**	13/187,328
				Filing Date	7/20/2011
Date Submitted: December 8, 2011				**First Named Inventor**	Radmond Vincent ARCETA
				Art Unit	3618
(use as many sheets as necessary)				**Examiner Name**	Frank Bennett Vanaman
Sheet	3	of	3	**Attorney Docket Number**	086554-1553

NON PATENT LITERATURE DOCUMENTS

Examiner Initials*	Cite No.[1]	Include name of the author (in CAPITAL LETTERS), title of the article (when appropriate), title of the item (book, magazine, journal, serial, symposium, catalog, etc.) date, page(s), volume-issue number(s), publisher, city and/or country where published.	T[6]
	B33	**Photo Image of EMS Cart With Optional Locking Drawers, 1 page.**	
	B34	**Ritter Installation and Operation Manual for 345 Procedures Cart, © Midmark Corporation - 1998, 11 pages.**	
	B35	**Supplemental Notice of Allowability dated December 28, 2005 received in corresponding U.S. Application 29/196,713.**	
	B36	**Supplemental Notice of Allowability dated November 25, 2005 received in corresponding U.S. Application 29/196,712.**	
	B37	**WWW.HOISE.COM/VMW/LV-VM-03-01-24.HTML; Virtual Medical Worlds, "NorthEast Medical Center in North Carolina First to Test New EMS Mobile Clinical Workstation, Atlanta, February 5, 2001, 2 pages.**	
	B38	**WWW.INFOLOGIXSYS.COM; InfoLogix Web Page Printouts for Mobile Cart Computing: Info Carts, Organizer Cart, Mobile Laptop/Integrated Flat Screen/Peripheral Cart, Variable Height Laptop Cart, SL-Cart and SL-Laptop Cart, ©2002-2003, 7 pages.**	
	B39	**WWW.LIONVILLE.COM/NEWS1.HTML; Lionville Webpage Capture, March-April ©2004, 3 pages.**	
	B40	**WWW.NAWARE.COM; NaWare Brochure, November 5, 2001, 4 pages.**	

Examiner Signature	/Frank Vanaman/	Date Considered	01/10/2012

*EXAMINER: Initial if reference considered, whether or not citation is in conformance with MPEP 609. Draw line through citation if not in conformance and not considered. Include copy of this form with next communication to applicant. 1 Applicant's unique citation designation number (optional). 2 See Kinds Codes of USPTO Patent Documents at www.uspto.gov or MPEP 901.04. 3 Enter Office that issued the document, by the two-letter code (WIPO Standard ST.3). 4 For Japanese patent documents, the indication of the year of the reign of the Emperor must precede the serial number of the patent document. 5 Kind of document by the appropriate symbols as indicated on the document under WIPO Standard ST.16 if possible. 6 Applicant is to place a check mark here if English language Translation is attached.

This collection of information is required by 37 CFR 1.97 and 1.98. The information is required to obtain or retain a benefit by the public which is to file (and by the USPTO to process) an application. Confidentiality is governed by 35 U.S.C. 122 and 37 CFR 1.14. This collection is estimated to take 2 hours to complete, including gathering, preparing, and submitting the completed application form to the USPTO. Time will vary depending upon the individual case. Any comments on the amount of time you require to complete this form and/or suggestions for reducing this burden, should be sent to the Chief Information Officer, U.S. Patent and Trademark Office, P.O. Box 1450, Alexandria, VA 22313-1450. DO NOT SEND FEES OR COMPLETED FORMS TO THIS ADDRESS. **SEND TO: Commissioner for Patents, P.O. Box 1450, Alexandria, VA 22313-1450**.

If you need assistance in completing the form, call 1-800-PTO-9199 (1-800-786-9199) and select option 2.

4819-4947-2526.1 ALL REFERENCES CONSIDERED EXCEPT WHERE LINED THROUGH. /FV/

UNITED STATES PATENT AND TRADEMARK OFFICE

UNITED STATES DEPARTMENT OF COMMERCE
United States Patent and Trademark Office
Address: COMMISSIONER FOR PATENTS
P.O. Box 1450
Alexandria, Virginia 22313-1450
www.uspto.gov

BIB DATA SHEET

CONFIRMATION NO. 6052

SERIAL NUMBER	FILING or 371(c) DATE	CLASS	GROUP ART UNIT	ATTORNEY DOCKET NO.
13/187,328	07/20/2011 RULE	280	3618	086554-1553

APPLICANTS

Radmond Vincent ARCETA, Manassas, VA;
Craig Kevin Rogers, Stephens City, VA;
Kevin Thomas Fitzpatrick, Winchester, VA;
Bryan Scott Ritchie, Clear Brook, VA;
Marin John Philpott, Winchester, VA;
Christina Louise Fortner, Stephens City, VA;

**** CONTINUING DATA ****************************

This application is a CON of 12/550,771 08/31/2009
which is a DIV of 12/193,346 08/18/2008 PAT 7,594,668
which is a CON of 10/783,030 02/23/2004 ABN
which claims benefit of 60/448,920 02/24/2003
and claims benefit of 60/484,658 07/07/2003
and claims benefit of 60/518,649 11/12/2003
and claims benefit of 60/532,900 12/30/2003

**** FOREIGN APPLICATIONS ****************************

**** IF REQUIRED, FOREIGN FILING LICENSE GRANTED ****

07/29/2011

Foreign Priority claimed	☐ Yes ☑ No	☐ Met after Allowance	STATE OR COUNTRY	SHEETS DRAWINGS	TOTAL CLAIMS	INDEPENDENT CLAIMS
35 USC 119(a-d) conditions met	☐ Yes ☑ No		VA	20	24	3
Verified and Acknowledged	/FRANK VANAMAN/ Examiner's Signature	Initials				

ADDRESS

FOLEY AND LARDNER LLP
SUITE 500
3000 K STREET NW
WASHINGTON, DC 20007
UNITED STATES

TITLE

MEDICAL CART, MEDICATION MODULE, HEIGHT ADJUSTMENT MECHANISM, AND METHOD OF MEDICATION TRANSPORT

FILING FEE RECEIVED		
1298	FEES: Authority has been given in Paper No._____ to charge/credit DEPOSIT ACCOUNT No._____ for following:	☐ All Fees ☐ 1.16 Fees (Filing) ☐ 1.17 Fees (Processing Ext. of time) ☐ 1.18 Fees (Issue) ☐ Other _____ ☐ Credit

BIB (Rev. 05/07).

PTO/SB/08 (09-06)
Approved for use through 03/31/2007. OMB 0651-0031
U.S. Patent and Trademark Office: U.S. DEPARTMENT OF COMMERCE

Under the Paperwork Reduction Act of 1995, no persons are required to respond to a collection of information unless it contains a valid OMB control number.

Substitute for form 1449/PTO				Complete if Known	
INFORMATION DISCLOSURE STATEMENT BY APPLICANT				**Application Number**	Unassigned
				Filing Date	Unassigned
Date Submitted: July 20, 2011				**First Named Inventor**	Radmond Vincent ARCETA
(use as many sheets as necessary)				**Art Unit**	Unassigned
				Examiner Name	Unassigned
Sheet	1	of	2	**Attorney Docket Number**	086554-1553

U.S. PATENT DOCUMENTS

Examiner Initials*	Cite No.[1]	Document Number Number-Kind Code[2] (*if known*)	Publication Date MM-DD-YYYY	Name of Patentee or Applicant of Cited Document	Pages, Columns, Lines, Where Relevant Passages or Relevant Figures Appear
	A1	US-3,024,036	03-1962	Reynolds, Henry E.	
	A2	US-3,031,207	04-1962	Bard, Elmer H.	
	A3	US-3,208,768	09-1965	Hulbert, Reed O.	
	A4	US-3,910,659	10-1975	Peterson, Warren J.	
	A5	US-4,071,740	01-1978	Gogulski, Paul	
	A6	US-4,127,202	11-1978	Jennings et al.	
	A7	US-4,440,096	04-1984	Rice et al.	
	A8	US-4,735,469	04-1988	Liggett, Philip R.	
	A9	US-4,875,696	10-1989	Welch et al.	
	A10	US-4,894,600	01-1990	Kearney, Deborah A.	
	A11	US-4,967,928	11-1990	Carter, Cheryl L.	
	A12	US-4,986,555	01-1991	Andreen, Gunnar B.	
	A13	US-5,842,708	12-1998	Miyaoka, Norikuni	
	A14	US-5,058,911	10-1991	Hunter et al.	
	A15	US-5,151,581	09-1992	Krichever et al.	
	A16	US-5,174,223	12-1992	Nagy et al.	
	A17	US-5,257,767	11-1993	McConnell, Dale K.	
	A18	US-5,704,625	01-1998	Presnell et al.	
	A19	US-5,734,839	03-1998	Enoki et al.	
	A20	US-5,758,848	06-1998	Beule, Erhard	
	A21	US-5,841,361	11-1998	Hoffman, Ronald J.	
	A22	US-6,050,660	04-2000	Gurley, Sherwin L.	
	A23	US-6,073,942	06-2000	Henevcld, Sr., William R.	
	A24	US-6,219,587	04-2001	Ahlin et al.	
	A25	US-6,418,854	07-2002	Kraft, Edwin R.	
	A26	US-6,435,407	08-2002	Fiordelisi, Luigi	
	A27	US-6,484,939	11-2002	Blaeuer, Dennis C.	
	A28	US-6,493,220	12-2002	Clark et al.	
	A29	US-6,578,501	06-2003	Moore, Lorraine	
	A30	US-6,615,744	09-2003	Eckstein et al.	
	A31	US-6,626,445	09-2003	Murphy et al.	
	A32	US-6,682,030	01-2004	Santoro et al.	
	A33	US-6,721,178	04-2004	Clark et al.	
	A34	US-6,722,673	04-2004	Hamlin, H. L. Roy	
	A35	US-6,860,494	03-2005	Chisholm, Karan L.	
	A36	US-6,874,807	04-2005	Labadle et al.	
	A37	US-6,883,439	04-2005	Moore, Lorraine	
	A38	US-7,104,556	09-2006	Young, Scot	

Examiner Signature	/Frank Vanaman/	Date Considered	01/10/2012

*EXAMINER: Initial if reference considered, whether or not citation is in conformance with MPEP 609. Draw line through citation if not in conformance and not considered. Include copy of this form with next communication to applicant. 1 Applicant's unique citation designation number (optional). 2 See Kinds Codes of USPTO Patent Documents at www.uspto.gov or MPEP 901.04. 3 Enter Office that issued the document, by the two-letter code (WIPO Standard ST.3). 4 For Japanese patent documents, the indication of the year of the reign of the Emperor must precede the serial number of the patent document. 5 Kind of document by the appropriate symbols as indicated on the document under WIPO Standard ST.16 if possible. 6 Applicant is to place a check mark here if English language Translation is attached.

This collection of information is required by 37 CFR 1.97 and 1.98. The information is required to obtain or retain a benefit by the public which is to file (and by the USPTO to process) an application. Confidentiality is governed by 35 U.S.C. 122 and 37 CFR 1.14. This collection is estimated to take 2 hours to complete, including gathering, preparing, and submitting the completed application form to the USPTO. Time will vary depending upon the individual case. Any comments on the amount of time you require to complete this form and/or suggestions for reducing this burden, should be sent to the Chief Information Officer, U.S. Patent and Trademark Office, P.O. Box 1450, Alexandria, VA 22313-1450. DO NOT SEND FEES OR COMPLETED FORMS TO THIS ADDRESS. **SEND TO: Commissioner for Patents, P.O. Box 1450, Alexandria, VA 22313-1450**.

If you need assistance in completing the form, call 1-800-PTO-9199 (1-800-786-9199) and select option 2.

ALL REFERENCES CONSIDERED EXCEPT WHERE LINED THROUGH. /FV/

Receipt date: 07/20/2011

13187328 - GAU: 3618

PTO/SB/08 (09-06)
Approved for use through 03/31/2007. OMB 0651-0031
U.S. Patent and Trademark Office: U.S. DEPARTMENT OF COMMERCE

Under the Paperwork Reduction Act of 1995, no persons are required to respond to a collection of information unless it contains a valid OMB control number.

Substitute for form 1449/PTO				Complete if Known	
INFORMATION DISCLOSURE STATEMENT BY APPLICANT				**Application Number**	Unassigned
				Filing Date	Unassigned
Date Submitted: July 20, 2011				**First Named Inventor**	Radmond Vincent ARCETA
				Art Unit	Unassigned
(use as many sheets as necessary)				**Examiner Name**	Unassigned
Sheet	2	of	2	**Attorney Docket Number**	086554-1553

U.S. PATENT DOCUMENTS

		Document Number			
	A39	**US-7,490,837**	**02-2009**	**Pond et al.**	
	A40	**US-2002/0125664**	**09-2002**	**Eriksson et al.**	
	A41	**US-2002/0165641**	**11-2002**	**Manalang et al.**	

UNPUBLISHED U.S. PATENT APPLICATION DOCUMENTS

Examiner Initials*	Cite No.[1]	U.S. Patent Application Document Serial Number-Kind Code[2] (*if known*)	Filing Date of Cited Document MM-DD-YYYY	Name of Patentee or Applicant of Cited Document	Pages, Columns, Lines, Where Relevant Passages or Relevant Figures Appear

FOREIGN PATENT DOCUMENTS

Examiner Initials*	Cite No.[1]	Foreign Patent Document Country Code[3]-Number[4]-Kind Code[5] (*if known*)	Publication Date MM-DD-YYYY	Name of Patentee or Applicant of Cited Documents	Pages, Columns, Lines, Where Relevant Passages or Relevant Figures Appear	T[6]

NON PATENT LITERATURE DOCUMENTS

Examiner Initials*	Cite No.[1]	Include name of the author (in CAPITAL LETTERS), title of the article (when appropriate), title of the item (book, magazine, journal, serial, symposium, catalog, etc.) date, page(s), volume-issue number(s), publisher, city and/or country where published.	T[6]

Examiner Signature	/Frank Vanaman/	Date Considered	01/10/2012

*EXAMINER: Initial if reference considered, whether or not citation is in conformance with MPEP 609. Draw line through citation if not in conformance and not considered. Include copy of this form with next communication to applicant. 1 Applicant's unique citation designation number (optional). 2 See Kinds Codes of USPTO Patent Documents at www.uspto.gov or MPEP 901.04. 3 Enter Office that issued the document, by the two-letter code (WIPO Standard ST.3). 4 For Japanese patent documents, the indication of the year of the reign of the Emperor must precede the serial number of the patent document. 5 Kind of document by the appropriate symbols as indicated on the document under WIPO Standard ST.16 if possible. 6 Applicant is to place a check mark here if English language Translation is attached.

This collection of information is required by 37 CFR 1.97 and 1.98. The information is required to obtain or retain a benefit by the public which is to file (and by the USPTO to process) an application. Confidentiality is governed by 35 U.S.C. 122 and 37 CFR 1.14. This collection is estimated to take 2 hours to complete, including gathering, preparing, and submitting the completed application form to the USPTO. Time will vary depending upon the individual case. Any comments on the amount of time you require to complete this form and/or suggestions for reducing this burden, should be sent to the Chief Information Officer, U.S. Patent and Trademark Office, P.O. Box 1450, Alexandria, VA 22313-1450. DO NOT SEND FEES OR COMPLETED FORMS TO THIS ADDRESS. **SEND TO: Commissioner for Patents, P.O. Box 1450, Alexandria, VA 22313-1450**.

If you need assistance in completing the form, call 1-800-PTO-9199 (1-800-786-9199) and select option 2.

WASH_8107851.1

ALL REFERENCES CONSIDERED EXCEPT WHERE LINED THROUGH. /FV/

Index of Claims	Application/Control No.	Applicant(s)/Patent Under Reexamination
	13187328	ARCETA ET AL.
	Examiner	**Art Unit**
	FRANK VANAMAN	3618

✓	Rejected	-	Cancelled	N	Non-Elected	A	Appeal
=	Allowed	÷	Restricted	I	Interference	O	Objected

☐ Claims renumbered in the same order as presented by applicant ☐ CPA ☐ T.D. ☐ R.1.47

CLAIM		DATE								
Final	Original	01/10/2012								
	1	✓								
	2	✓								
	3	✓								
	4	✓								
	5	✓								
	6	✓								
	7	✓								
	8	✓								
	9	✓								
	10	✓								
	11	✓								
	12	✓								
	13	✓								
	14	✓								
	15	✓								
	16	✓								
	17	✓								
	18	✓								
	19	✓								
	20	✓								
	21	✓								
	22	✓								
	23	✓								
	24	✓								

UNITED STATES PATENT AND TRADEMARK OFFICE

UNITED STATES DEPARTMENT OF COMMERCE
United States Patent and Trademark Office
Address: COMMISSIONER FOR PATENTS
P.O. Box 1450
Alexandria, Virginia 22313-1450
www.uspto.gov

APPLICATION NUMBER	FILING OR 371(C) DATE	FIRST NAMED APPLICANT	ATTY. DOCKET NO./TITLE
13/187,328	07/20/2011	Radmond Vincent ARCETA	086554-1553

CONFIRMATION NO. 6052

IMPROPER CFR REQUEST

OC000000051512581

22428
FOLEY AND LARDNER LLP
SUITE 500
3000 K STREET NW
WASHINGTON, DC 20007

Date Mailed: 12/20/2011

RESPONSE TO REQUEST FOR CORRECTED FILING RECEIPT

Continuity, Priority Claims, Petitions, and Non-Publication Requests

In response to your request for a corrected Filing Receipt, the Office is unable to comply with your request because:

- Continuity claimed under 35 U.S.C. § 120 cannot be added to the Filing Receipt without the applicant supplying the relationship (continuation, divisional, or continuation-in-part) in an Application Data Sheet or amendment to the first page of the specification.

/hsarwari/

Office of Data Management, Application Assistance Unit (571) 272-4000, or (571) 272-4200, or 1-888-786-0101

IN THE UNITED STATES PATENT AND TRADEMARK OFFICE

Applicant: Radmond ARCETA et al.

Title: MEDICAL CART, MEDICATION MODULE, HEIGHT ADJUSTMENT MECHANISM, AND METHOD OF MEDICATION TRANSPORT

Appl. No.: 13/187,328

Filing Date: 7/20/2011

Examiner: Frank Bennett Vanaman

Art Unit: 3618

Confirmation Number: 6052

INFORMATION DISCLOSURE STATEMENT UNDER 37 CFR §1.56

Commissioner for Patents
P.O. Box 1450
Alexandria, VA 22313-1450

Sir:

Submitted herewith on Form PTO/SB/08 is a listing of documents known to Applicants in order to comply with Applicants' duty of disclosure pursuant to 37 CFR §1.56.

A copy of each non-U.S. patent document and each non-patent document is being submitted to comply with the provisions of 37 CFR §1.97 and §1.98.

The submission of any document herewith, which is not a statutory bar, is not intended as an admission that such document constitutes prior art against the claims of the present application or that such document is considered material to patentability as defined in 37 CFR §1.56(b). Applicants do not waive any rights to take any action which would be appropriate to antedate or otherwise remove as a competent reference any document which is determined to be a *prima facie* art reference against the claims of the present application.

TIMING OF THE DISCLOSURE

The listed document is being submitted in compliance with 37 CFR §1.97(b), before the mailing date of the first Office Action on the merits.

RELEVANCE OF EACH DOCUMENT

All of the documents are in English.

Applicants respectfully request that each listed document be considered by the Examiner and be made of record in the present application and that an initialed copy of Form PTO/SB/08 be returned in accordance with MPEP §609.

Although Applicant believes that no fee is required, the Commissioner is hereby authorized to charge any additional fees which may be due to Deposit Account No. 19-0741.

Respectfully submitted,

Date December 7, 2011

By

FOLEY & LARDNER LLP
Customer Number: 22428
Telephone: (202) 672-5349
Facsimile: (202) 672-5399

Andrew E. Rawlins
Attorney for Applicant
Registration No. 34,702

Under the Paperwork Reduction Act of 1995, no persons are required to respond to a collection of information unless it contains a valid OMB control number.

Substitute for form 1449/PTO				Complete if Known	
INFORMATION DISCLOSURE STATEMENT BY APPLICANT				**Application Number**	13/187,328
Date Submitted: December 8, 2011				**Filing Date**	7/20/2011
				First Named Inventor	Radmond Vincent ARCETA
(use as many sheets as necessary)				**Art Unit**	3618
				Examiner Name	Frank Bennett Vanaman
Sheet	1	of	3	**Attorney Docket Number**	086554-1553

U.S. PATENT DOCUMENTS

Examiner Initials*	Cite No.[1]	Document Number / Number-Kind Code[2] (*if known*)	Publication Date MM-DD-YYYY	Name of Patentee or Applicant of Cited Document	Pages, Columns, Lines, Where Relevant Passages or Relevant Figures Appear
	B1	D 146,375	02-18-1947	OBRIG	
	B2	D 240,629	07-20-1976	COPE	
	B3	D 349,594	08-09-1994	BONAZZA, CLAUDIO	
	B4	D 367,381	02-27-1996	LICARI, YAFFA	
	B5	D 387,168	12-02-1997	EDELMAN ET AL.	
	B6	D 389,917	01-27-1998	HORNBACK ET AL.	
	B7	D 390,733	02-17-1998	BRUNNER ET AL.	
	B8	D 402,529	12-15-1998	HUSTED, WAYNE	
	B9	D 410,230	05-25-1999	WITTE, KAY-UWE	
	B10	D 438,952	03-13-2001	CIMINO ET AL.	
	B11	D 441,513	05-01-2001	MULLEN ET AL.	
	B12	D 458,780-S	06-18-2002	SIEPMANN ET AL.	
	B13	D 459,477	06-25-2002	STOCKS ET AL.	
	B14	D 462,674-S	09-10-2002	SIEPMANN ET AL.	
	B15	D 465,895	11-19-2002	PFEFFERLE ET AL.	
	B16	D 468,420	01-07-2003	BOLMSJO, MAGNUS	
	B17	D 481,847	11-04-2003	VAN LANDINGHAM, JR., ALFRED RENEAU	
	B18	D 482,173	11-11-2003	VAN LANDINGHAM, JR., ALFRED RENEAU	
	B19	D 486,915	02-17-2004	WARSCHEWSKE ET AL.	
	B20	D 487,178	02-24-2004	CUZZOCREA, LAWRENCE A.	
	B21	D 497,462	10-19-2004	RYAN, BRADLEY PETER	
	B22	D 500,575	01-04-2005	LUCAS, TOMMIE	

UNPUBLISHED U.S. PATENT APPLICATION DOCUMENTS

Examiner Initials*	Cite No.[1]	U.S. Patent Application Document / Serial Number-Kind Code[2] (*if known*)	Filing Date of Cited Document MM-DD-YYYY	Name of Patentee or Applicant of Cited Document	Pages, Columns, Lines, Where Relevant Passages or Relevant Figures Appear

FOREIGN PATENT DOCUMENTS

Examiner Initials*	Cite No.[1]	Foreign Patent Document / Country Code[3]-Number[4]-Kind Code[5] (*if known*)	Publication Date MM-DD-YYYY	Name of Patentee or Applicant of Cited Documents	Pages, Columns, Lines, Where Relevant Passages or Relevant Figures Appear	T[6]

Examiner Signature		Date Considered	

*EXAMINER: Initial if reference considered, whether or not citation is in conformance with MPEP 609. Draw line through citation if not in conformance and not considered. Include copy of this form with next communication to applicant. 1 Applicant's unique citation designation number (optional). 2 See Kinds Codes of USPTO Patent Documents at www.uspto.gov or MPEP 901.04. 3 Enter Office that issued the document, by the two-letter code (WIPO Standard ST.3). 4 For Japanese patent documents, the indication of the year of the reign of the Emperor must precede the serial number of the patent document. 5 Kind of document by the appropriate symbols as indicated on the document under WIPO Standard ST.16 if possible. 6 Applicant is to place a check mark here if English language Translation is attached.

This collection of information is required by 37 CFR 1.97 and 1.98. The information is required to obtain or retain a benefit by the public which is to file (and by the USPTO to process) an application. Confidentiality is governed by 35 U.S.C. 122 and 37 CFR 1.14. This collection is estimated to take 2 hours to complete, including gathering, preparing, and submitting the completed application form to the USPTO. Time will vary depending upon the individual case. Any comments on the amount of time you require to complete this form and/or suggestions for reducing this burden, should be sent to the Chief Information Officer, U.S. Patent and Trademark Office, P.O. Box 1450, Alexandria, VA 22313-1450. DO NOT SEND FEES OR COMPLETED FORMS TO THIS ADDRESS. **SEND TO: Commissioner for Patents, P.O. Box 1450, Alexandria, VA 22313-1450**.

If you need assistance in completing the form, call 1-800-PTO-9199 (1-800-786-9199) and select option 2.

Under the Paperwork Reduction Act of 1995, no persons are required to respond to a collection of information unless it contains a valid OMB control number.

Substitute for form 1449/PTO

INFORMATION DISCLOSURE STATEMENT BY APPLICANT

Date Submitted: December 8, 2011

(use as many sheets as necessary)

Sheet 2 of 3

Complete if Known	
Application Number	13/187,328
Filing Date	7/20/2011
First Named Inventor	Radmond Vincent ARCETA
Art Unit	3618
Examiner Name	Frank Bennett Vanaman
Attorney Docket Number	086554-1553

FOREIGN PATENT DOCUMENTS

Examiner Initials*	Cite No.[1]	Foreign Patent Document Country Code[3]-Number[4]-Kind Code[5] (*if known*)	Publication Date MM-DD-YYYY	Name of Patentee or Applicant of Cited Documents	Pages, Columns, Lines, Where Relevant Passages or Relevant Figures Appear	T[6]

NON PATENT LITERATURE DOCUMENTS

Examiner Initials*	Cite No.[1]	Include name of the author (in CAPITAL LETTERS), title of the article (when appropriate), title of the item (book, magazine, journal, serial, symposium, catalog, etc.) date, page(s), volume-issue number(s), publisher, city and/or country where published.	T[6]
	B23	**iCart PointofCare Brochure (Lionville), June 2004, 2 pages.**	
	B24	**Notice of Allowance dated July 7, 2005 received in corresponding U.S. Application 29/196,712.**	
	B25	**Notice of Allowance dated June 1, 2005 received in corresponding U.S. Application 29/196,714.**	
	B26	**Notice of Allowance dated May 31, 2005 received in corresponding U.S. Application 29/196,713.**	
	B27	**Notice of Allowance received in 12/193,346 (086554-1497) dated May 20, 2009.**	
	B28	**Office Action received in U.S. 10/783,030 (086554-1056) dated June 26, 2006.**	
	B29	**Office Action received in U.S. Application 10/783,030 (086554-1056) dated February 19, 2008.**	
	B30	**Office Action received in U.S. Application 10/783,030 (086554-1056) dated June 13, 2007**	
	B31	**Office Action dated January 28, 2011 received in corresponding U.S. Application 12/550,771 (086554-1544).**	
	B32	**Office Action dated June 24, 2011 received in corresponding U.S. Application 12/550,771 (086554-1544).**	

Examiner Signature		Date Considered	

*EXAMINER: Initial if reference considered, whether or not citation is in conformance with MPEP 609. Draw line through citation if not in conformance and not considered. Include copy of this form with next communication to applicant. 1 Applicant's unique citation designation number (optional). 2 See Kinds Codes of USPTO Patent Documents at www.uspto.gov or MPEP 901.04. 3 Enter Office that issued the document, by the two-letter code (WIPO Standard ST.3). 4 For Japanese patent documents, the indication of the year of the reign of the Emperor must precede the serial number of the patent document. 5 Kind of document by the appropriate symbols as indicated on the document under WIPO Standard ST.16 if possible. 6 Applicant is to place a check mark here if English language Translation is attached.

This collection of information is required by 37 CFR 1.97 and 1.98. The information is required to obtain or retain a benefit by the public which is to file (and by the USPTO to process) an application. Confidentiality is governed by 35 U.S.C. 122 and 37 CFR 1.14. This collection is estimated to take 2 hours to complete, including gathering, preparing, and submitting the completed application form to the USPTO. Time will vary depending upon the individual case. Any comments on the amount of time you require to complete this form and/or suggestions for reducing this burden, should be sent to the Chief Information Officer, U.S. Patent and Trademark Office, P.O. Box 1450, Alexandria, VA 22313-1450. DO NOT SEND FEES OR COMPLETED FORMS TO THIS ADDRESS. **SEND TO: Commissioner for Patents, P.O. Box 1450, Alexandria, VA 22313-1450**.

If you need assistance in completing the form, call 1-800-PTO-9199 (1-800-786-9199) and select option 2.

Under the Paperwork Reduction Act of 1995, no persons are required to respond to a collection of information unless it contains a valid OMB control number.

Substitute for form 1449/PTO				Complete if Known	
INFORMATION DISCLOSURE STATEMENT BY APPLICANT				**Application Number**	13/187,328
Date Submitted: December 8, 2011				**Filing Date**	7/20/2011
				First Named Inventor	Radmond Vincent ARCETA
(use as many sheets as necessary)				**Art Unit**	3618
				Examiner Name	Frank Bennett Vanaman
Sheet	3	of	3	**Attorney Docket Number**	086554-1553

NON PATENT LITERATURE DOCUMENTS

Examiner Initials*	Cite No.[1]	Include name of the author (in CAPITAL LETTERS), title of the article (when appropriate), title of the item (book, magazine, journal, serial, symposium, catalog, etc.) date, page(s), volume-issue number(s), publisher, city and/or country where published.	T[6]
	B33	**Photo Image of EMS Cart With Optional Locking Drawers, 1 page.**	
	B34	**Ritter Installation and Operation Manual for 345 Procedures Cart, © Midmark Corporation - 1998, 11 pages.**	
	B35	**Supplemental Notice of Allowability dated December 28, 2005 received in corresponding U.S. Application 29/196,713.**	
	B36	**Supplemental Notice of Allowability dated November 25, 2005 received in corresponding U.S. Application 29/196,712.**	
	B37	**WWW.HOISE.COM/VMW/LV-VM-03-01-24.HTML; Virtual Medical Worlds, "NorthEast Medical Center in North Carolina First to Test New EMS Mobile Clinical Workstation, Atlanta, February 5, 2001, 2 pages.**	
	B38	**WWW.INFOLOGIXSYS.COM; InfoLogix Web Page Printouts for Mobile Cart Computing: Info Carts, Organizer Cart, Mobile Laptop/Integrated Flat Screen/Peripheral Cart, Variable Height Laptop Cart, SL-Cart and SL-Laptop Cart, ©2002-2003, 7 pages.**	
	B39	**WWW.LIONVILLE.COM/NEWS1.HTML; Lionville Webpage Capture, March-April ©2004, 3 pages.**	
	B40	**WWW.NAWARE.COM; NaWare Brochure, November 5, 2001, 4 pages.**	

Examiner Signature		Date Considered	

*EXAMINER: Initial if reference considered, whether or not citation is in conformance with MPEP 609. Draw line through citation if not in conformance and not considered. Include copy of this form with next communication to applicant. 1 Applicant's unique citation designation number (optional). 2 See Kinds Codes of USPTO Patent Documents at www.uspto.gov or MPEP 901.04. 3 Enter Office that issued the document, by the two-letter code (WIPO Standard ST.3). 4 For Japanese patent documents, the indication of the year of the reign of the Emperor must precede the serial number of the patent document. 5 Kind of document by the appropriate symbols as indicated on the document under WIPO Standard ST.16 if possible. 6 Applicant is to place a check mark here if English language Translation is attached.

This collection of information is required by 37 CFR 1.97 and 1.98. The information is required to obtain or retain a benefit by the public which is to file (and by the USPTO to process) an application. Confidentiality is governed by 35 U.S.C. 122 and 37 CFR 1.14. This collection is estimated to take 2 hours to complete, including gathering, preparing, and submitting the completed application form to the USPTO. Time will vary depending upon the individual case. Any comments on the amount of time you require to complete this form and/or suggestions for reducing this burden, should be sent to the Chief Information Officer, U.S. Patent and Trademark Office, P.O. Box 1450, Alexandria, VA 22313-1450. DO NOT SEND FEES OR COMPLETED FORMS TO THIS ADDRESS. **SEND TO: Commissioner for Patents, P.O. Box 1450, Alexandria, VA 22313-1450**.

If you need assistance in completing the form, call 1-800-PTO-9199 (1-800-786-9199) and select option 2.

Electronic Acknowledgement Receipt

EFS ID:	11570753
Application Number:	13187328
International Application Number:	
Confirmation Number:	6052
Title of Invention:	MEDICAL CART, MEDICATION MODULE, HEIGHT ADJUSTMENT MECHANISM, AND METHOD OF MEDICATION TRANSPORT
First Named Inventor/Applicant Name:	Radmond Vincent ARCETA
Customer Number:	22428
Filer:	Andrew E. Rawlins./Kimberley Cox-Baione
Filer Authorized By:	Andrew E. Rawlins.
Attorney Docket Number:	086554-1553
Receipt Date:	08-DEC-2011
Filing Date:	20-JUL-2011
Time Stamp:	14:11:41
Application Type:	Utility under 35 USC 111(a)

Payment information:

Submitted with Payment	no

File Listing:

Document Number	Document Description	File Name	File Size(Bytes)/ Message Digest	Multi Part /.zip	Pages (if appl.)
1	Request for Corrected Filing Receipt	RequestforCorrectedFilingReceipt.pdf	787969 1e903361c473d1aa695bf6552fc40a395b5aa800	no	19

Warnings:

Information:

2	Information Disclosure Statement (IDS) Form (SB08)	IDSandSB08.pdf	271719 646b07202460222789b13a33c3abfc5e987042f3	no	5
Warnings:					
Information:					
This is not an USPTO supplied IDS fillable form					
3	Non Patent Literature	B23ReferenceiCartPointofCareBrochure.pdf	1576950 716d6ef6d33449529cc0c74d0c2d631dafe248df	no	2
Warnings:					
Information:					
4	Non Patent Literature	B24ReferenceNOALdated772005.pdf	573022 b749dd871cad2c0d99645a62f9d33eb3fe07e34f	no	12
Warnings:					
Information:					
5	Non Patent Literature	B25ReferenceNOALdated612005.pdf	556308 aa9fd5e52ebe908485b02b37f6e4243636483a00	no	11
Warnings:					
Information:					
6	Non Patent Literature	B26ReferenceNOALdated53105.pdf	545993 0d74ca3e12de4c69c61c6d826cd0a347b9611efd	no	11
Warnings:					
Information:					
7	Non Patent Literature	B27ReferenceNOALdated52009.pdf	354420 56a75199fde210b247962a5843fc6470c6be7b86	no	8
Warnings:					
Information:					
8	Non Patent Literature	B28ReferenceOAdated62606.pdf	826821 415108a89c7f9cde43043c45998923ac5c4c8435	no	16
Warnings:					
Information:					
9	Non Patent Literature	B29ReferenceOAdated21908.pdf	402369 cdea31ca8dbdc94ac263b71dfb005b9481c1d9b5	no	9
Warnings:					
Information:					
10	Non Patent Literature	B30ReferenceOAdated61307.pdf	600181 8843d76c18ec9dd633218162967c31916aeacbbc	no	12

Warnings:					
Information:					
11	Non Patent Literature	B31ReferenceOAdated12811.pdf	460615 5e7dce7a7ee60016b50bac69f1ab1db15d43f2c7	no	9
Warnings:					
Information:					
12	Non Patent Literature	B32ReferenceOAdated62411.pdf	418357 5591f832c80f1f9a407d00b9141987fcbdabcd21	no	10
Warnings:					
Information:					
13	Non Patent Literature	B33ReferencePhotoImageOptionalLockingDrawers.pdf	717325 049cf2c218e97e172caaba79f22a966c9bce3113	no	1
Warnings:					
Information:					
14	Non Patent Literature	B34ReferenceRitterInstallfor34ProceduresCart.pdf	669061 b5116faf7d40242fa99e8e6336bfcf9c97a599f1	no	15
Warnings:					
Information:					
15	Non Patent Literature	B35ReferenceSuppNOALdated122805.pdf	162577 4f855ec6504a4e10520db56b94ada36438028c07	no	4
Warnings:					
Information:					
16	Non Patent Literature	B36ReferenceSuppNOALdated112505.pdf	145327 309836cef9298d172669b111826d4372247ab764	no	3
Warnings:					
Information:					
17	Non Patent Literature	B37ReferenceVirtualMedicalWorlds.pdf	152806 3e7608b5a4aefdd4ad40e48d221be811254b73ba	no	2
Warnings:					
Information:					
18	Non Patent Literature	B38ReferenceInfoLogixWebforMobileCartComputing.pdf	1852194 c0d41984361711624307b3e21c43e538a549ba50	no	7
Warnings:					
Information:					
19	Non Patent Literature	B39ReferenceLionvilleWebpageCaptureMarchApril2004.pdf	1142475 cf9f13039da48b2d1802177ff1fb22ff6f5f8d87	no	3

Warnings:					
Information:					
20	Non Patent Literature	B40ReferenceNaWareBrochure November52001.pdf	1057005 04a35fa50f8e4718bc74cef9455ecd3b32ca011e	no	4
Warnings:					
Information:					
		Total Files Size (in bytes):	13273494		

This Acknowledgement Receipt evidences receipt on the noted date by the USPTO of the indicated documents, characterized by the applicant, and including page counts, where applicable. It serves as evidence of receipt similar to a Post Card, as described in MPEP 503.

New Applications Under 35 U.S.C. 111
If a new application is being filed and the application includes the necessary components for a filing date (see 37 CFR 1.53(b)-(d) and MPEP 506), a Filing Receipt (37 CFR 1.54) will be issued in due course and the date shown on this Acknowledgement Receipt will establish the filing date of the application.

National Stage of an International Application under 35 U.S.C. 371
If a timely submission to enter the national stage of an international application is compliant with the conditions of 35 U.S.C. 371 and other applicable requirements a Form PCT/DO/EO/903 indicating acceptance of the application as a national stage submission under 35 U.S.C. 371 will be issued in addition to the Filing Receipt, in due course.

New International Application Filed with the USPTO as a Receiving Office
If a new international application is being filed and the international application includes the necessary components for an international filing date (see PCT Article 11 and MPEP 1810), a Notification of the International Application Number and of the International Filing Date (Form PCT/RO/105) will be issued in due course, subject to prescriptions concerning national security, and the date shown on this Acknowledgement Receipt will establish the international filing date of the application.

Atty. Dkt. No. 086554-1553

IN THE UNITED STATES PATENT AND TRADEMARK OFFICE

Applicant:	Radmond ARCETA et al.
Title:	MEDICAL CART, MEDICATION MODULE, HEIGHT ADJUSTMENT MECHANISM, AND METHOD OF MEDICATION TRANSPORT
Appl. No.:	13/187,328
Filing Date:	7/20/2011
Examiner:	Frank Bennett Vanaman
Art Unit:	3618
Confirmation Number:	6052

REQUEST FOR CORRECTED FILING RECEIPT

Commissioner for Patents
P.O. Box 1450
Alexandria, VA 22313-1450

Attn: Appl. Processing Division, Customer Correction Branch

Sir:

Attached is a copy of the official Filing Receipt received from the PTO in the above-referenced application.

There is an error with respect to the Domestic Priority Data As Claimed By Applicant as follows:

Please add -- and claims benefit of 29/196,712 01/02/2004

and claims benefit of 29/196,713 01/02/2004

and claims benefit of 29/196,714 01/02/2004 --.

4825-3132-8269.1

The correction is not due to any error by Applicant and, accordingly, no fee is due. Issuance of a corrected Filing Receipt is respectfully requested.

Respectfully submitted,

Date December 6, 2011 By

FOLEY & LARDNER LLP
Customer Number: 22428
Telephone: (202) 672-5349
Facsimile: (202) 672-5399

Andrew E. Rawlins
Attorney for Applicant
Registration No. 34,702

UNITED STATES PATENT AND TRADEMARK OFFICE

UNITED STATES DEPARTMENT OF COMMERCE
United States Patent and Trademark Office
Address: COMMISSIONER FOR PATENTS
P.O. Box 1450
Alexandria, Virginia 22313-1450
www.uspto.gov

APPLICATION NUMBER	FILING or 371(c) DATE	GRP ART UNIT	FIL FEE REC'D	ATTY.DOCKET.NO	TOT CLAIMS	IND CLAIMS
13/187,328	07/20/2011	3651	1298	086554-1553	24	3

CONFIRMATION NO. 6052

22428
FOLEY AND LARDNER LLP
SUITE 500
3000 K STREET NW
WASHINGTON, DC 20007

FILING RECEIPT

OC000000049048120

- CORRECTED -

Date Mailed: 08/02/2011

Receipt is acknowledged of this non-provisional patent application. The application will be taken up for examination in due course. Applicant will be notified as to the results of the examination. Any correspondence concerning the application must include the following identification information: the U.S. APPLICATION NUMBER, FILING DATE, NAME OF APPLICANT, and TITLE OF INVENTION. Fees transmitted by check or draft are subject to collection. Please verify the accuracy of the data presented on this receipt. **If an error is noted on this Filing Receipt, please submit a written request for a Filing Receipt Correction. Please provide a copy of this Filing Receipt with the changes noted thereon. If you received a "Notice to File Missing Parts" for this application, please submit any corrections to this Filing Receipt with your reply to the Notice. When the USPTO processes the reply to the Notice, the USPTO will generate another Filing Receipt incorporating the requested corrections**

Applicant(s)

Radmond Vincent ARCETA, Manassas, VA;
Craig Kevin Rogers, Stephens City, VA;
Kevin Thomas Fitzpatrick, Winchester, VA;
Bryan Scott Ritchie, Clear Brook, VA;
Marin John Philpott, Winchester, VA;
Christina Louise Fortner, Stephens City, VA;

Assignment For Published Patent Application

Rubbermaid Incorporated

Power of Attorney: The patent practitioners associated with Customer Number 22428

Domestic Priority data as claimed by applicant

This application is a CON of 12/550,771 08/31/2009 and claims benefit of 29/196,712 01/02/2004
which is a DIV of 12/193,346 08/18/2008 PAT 7,594,668 and claims benefit of 29/196,713 01/02/2004
which is a CON of 10/783,030 02/23/2004 ABN and claims benefit of 29/196,714 01/02/2004
which claims benefit of 60/448,920 02/24/2003
and claims benefit of 60/484,658 07/07/2003
and claims benefit of 60/518,649 11/12/2003
and claims benefit of 60/532,900 12/30/2003

Foreign Applications (You may be eligible to benefit from the **Patent Prosecution Highway** program at the USPTO. Please see http://www.uspto.gov for more information.)

If Required, Foreign Filing License Granted: 07/29/2011

The country code and number of your priority application, to be used for filing abroad under the Paris Convention, is **US 13/187,328**

Projected Publication Date: 11/10/2011

Non-Publication Request: No

Early Publication Request: No
Title

MEDICAL CART, MEDICATION MODULE, HEIGHT ADJUSTMENT MECHANISM, AND METHOD OF MEDICATION TRANSPORT

Preliminary Class

700

PROTECTING YOUR INVENTION OUTSIDE THE UNITED STATES

Since the rights granted by a U.S. patent extend only throughout the territory of the United States and have no effect in a foreign country, an inventor who wishes patent protection in another country must apply for a patent in a specific country or in regional patent offices. Applicants may wish to consider the filing of an international application under the Patent Cooperation Treaty (PCT). An international (PCT) application generally has the same effect as a regular national patent application in each PCT-member country. The PCT process **simplifies** the filing of patent applications on the same invention in member countries, but **does not result** in a grant of "an international patent" and does not eliminate the need of applicants to file additional documents and fees in countries where patent protection is desired.

Almost every country has its own patent law, and a person desiring a patent in a particular country must make an application for patent in that country in accordance with its particular laws. Since the laws of many countries differ in various respects from the patent law of the United States, applicants are advised to seek guidance from specific foreign countries to ensure that patent rights are not lost prematurely.

Applicants also are advised that in the case of inventions made in the United States, the Director of the USPTO must issue a license before applicants can apply for a patent in a foreign country. The filing of a U.S. patent application serves as a request for a foreign filing license. The application's filing receipt contains further information and guidance as to the status of applicant's license for foreign filing.

Applicants may wish to consult the USPTO booklet, "General Information Concerning Patents" (specifically, the section entitled "Treaties and Foreign Patents") for more information on timeframes and deadlines for filing foreign patent applications. The guide is available either by contacting the USPTO Contact Center at 800-786-9199, or it can be viewed on the USPTO website at http://www.uspto.gov/web/offices/pac/doc/general/index.html.

For information on preventing theft of your intellectual property (patents, trademarks and copyrights), you may wish to consult the U.S. Government website, http://www.stopfakes.gov. Part of a Department of Commerce initiative, this website includes self-help "toolkits" giving innovators guidance on how to protect intellectual property in specific countries such as China, Korea and Mexico. For questions regarding patent enforcement issues, applicants may call the U.S. Government hotline at 1-866-999-HALT (1-866-999-4158).

LICENSE FOR FOREIGN FILING UNDER

Title 35, United States Code, Section 184

Title 37, Code of Federal Regulations, 5.11 & 5.15

GRANTED

The applicant has been granted a license under 35 U.S.C. 184, if the phrase "IF REQUIRED, FOREIGN FILING LICENSE GRANTED" followed by a date appears on this form. Such licenses are issued in all applications where the conditions for issuance of a license have been met, regardless of whether or not a license may be required as set forth in 37 CFR 5.15. The scope and limitations of this license are set forth in 37 CFR 5.15(a) unless an earlier license has been issued under 37 CFR 5.15(b). The license is subject to revocation upon written notification. The date indicated is the effective date of the license, unless an earlier license of similar scope has been granted under 37 CFR 5.13 or 5.14.

This license is to be retained by the licensee and may be used at any time on or after the effective date thereof unless it is revoked. This license is automatically transferred to any related applications(s) filed under 37 CFR 1.53(d). This license is not retroactive.

The grant of a license does not in any way lessen the responsibility of a licensee for the security of the subject matter as imposed by any Government contract or the provisions of existing laws relating to espionage and the national security or the export of technical data. Licensees should apprise themselves of current regulations especially with respect to certain countries, of other agencies, particularly the Office of Defense Trade Controls, Department of State (with respect to Arms, Munitions and Implements of War (22 CFR 121-128)); the Bureau of Industry and Security, Department of Commerce (15 CFR parts 730-774); the Office of Foreign AssetsControl, Department of Treasury (31 CFR Parts 500+) and the Department of Energy.

NOT GRANTED

No license under 35 U.S.C. 184 has been granted at this time, if the phrase "IF REQUIRED, FOREIGN FILING LICENSE GRANTED" DOES NOT appear on this form. Applicant may still petition for a license under 37 CFR 5.12, if a license is desired before the expiration of 6 months from the filing date of the application. If 6 months has lapsed from the filing date of this application and the licensee has not received any indication of a secrecy order under 35 U.S.C. 181, the licensee may foreign file the application pursuant to 37 CFR 5.15(b).

Amendments to the Specification:

Please amend the specification as follows:

Please replace paragraph [0001] with the following rewritten paragraph:

This application claims priority to U.S. Provisional Application Nos. 60/448,920 (filed February 24, 2003), 60/484,658 (filed July 7, 2003), and 60/518,649 (filed November 12, 2003). This application also claims priority to U.S. Design Patent Application Nos. 29/196,712, 29/196,713, 29/196,714 (all filed January 2, 2004) and to U.S. Design Patent Application Nos. 29/199,984 and 29/199,985 (both filed February 23, 2004). _____, ~~and _____ (filed concurrently herewith).~~

UNITED STATES PATENT AND TRADEMARK OFFICE

UNITED STATES DEPARTMENT OF COMMERCE
United States Patent and Trademark Office
Address: COMMISSIONER FOR PATENTS
P.O. Box 1450
Alexandria, Virginia 22313-1450
www.uspto.gov

Bib Data Sheet

CONFIRMATION NO. 3782

SERIAL NUMBER	FILING OR 371(c) DATE	CLASS	GROUP ART UNIT	ATTORNEY DOCKET NO.
10/783,030	02/23/2004 RULE	280	3618	086554-1056

APPLICANTS

Radmond Vincent Arceta, Manassas, VA;
Craig Kevin Rogers, Stephens City, VA;
Kevin Thomas Fitzpatrick, Winchester, VA;
Bryan Scott Ritchie, Clear Brook, VA;
Marin John Philpott, Winchester, VA;
Christina Louise Fortner, Stephens City, VA;

**** CONTINUING DATA ****************************** FB✓

This appln claims benefit of 60/448,920 02/24/2003 and claims benefit of 60/484,658 07/07/2003
and claims benefit of 60/518,649 11/12/2003
and claims benefit of 60/532,900 12/30/2003

**** FOREIGN APPLICATIONS ************************ FB✓

IF REQUIRED, FOREIGN FILING LICENSE GRANTED
** 05/13/2004

		STATE OR COUNTRY	SHEETS DRAWING	TOTAL CLAIMS	INDEPENDENT CLAIMS
Foreign Priority claimed ☐ yes ☐ no 35 USC 119 (a-d) conditions met ☐ yes ☐ no ☐ Met after Allowance Verified and Acknowledged Examiner's Signature Initials		VA	20	17	4

ADDRESS
22428

TITLE
Medical cart, medication module, height adjustment mechanism, and method of medication transport

FILING FEE RECEIVED		
2686	FEES: Authority has been given in Paper No. _____ to charge/credit DEPOSIT ACCOUNT No. _____ for following:	☐ All Fees ☐ 1.16 Fees (Filing) ☐ 1.17 Fees (Processing Ext. of time) ☐ 1.18 Fees (Issue) ☐ Other _____ ☐ Credit

OIPE JC09
AUG 1 6 2004
PATENT & TRADEMARK OFFICE

Atty. Dkt. No. 086554-1056

DECLARATION AND POWER OF ATTORNEY

As a below named inventor, I HEREBY DECLARE:

THAT my residence, post office address, and citizenship are as stated below next to my name;

THAT I believe I am the original, first, and sole inventor (if only one inventor is named below) or an original, first, and joint inventor (if plural inventors are named below or in an attached Declaration) of the subject matter which is claimed and for which a patent is sought on the invention entitled

MEDICAL CART, MEDICATION MODULE, HEIGHT ADJUSTMENT MECHANISM, AND METHOD OF MEDICATION TRANSPORT

(Attorney Docket No. 086554-1056)

the specification of which (check one)

___ is attached hereto.

_X_ was filed on _02/23/2004_ as United States Application Number or PCT International Application Number _10/783,030_ and was amended on _____ (if applicable).

THAT I do not know and do not believe that the same invention was ever known or used by others in the United States of America, or was patented or described in any printed publication in any country, before I (we) invented it;

THAT I do not know and do not believe that the same invention was patented or described in any printed publication in any country, or in public use or on sale in the United States of America, for more than one year prior to the filing date of this United States application;

THAT I do not know and do not believe that the same invention was first patented or made the subject of an inventor's certificate that issued in any country foreign to the United States of America before the filing date of this United States application if the foreign application was filed by me (us), or by my (our) legal representatives or assigns, more than twelve months (six months for design patents) prior to the filing date of this United States application;

THAT I have reviewed and understand the contents of the above-identified specification, including the claim(s), as amended by any amendment specifically referred to above;

THAT I believe that the above-identified specification contains a written description of the invention, and of the manner and process of making and using it, in such full, clear,

concise, and exact terms as to enable any person skilled in the art to which it pertains, or with which it is most nearly connected, to make and use the invention, and sets forth the best mode contemplated by me of carrying out the invention; and

THAT I acknowledge the duty to disclose to the U.S. Patent and Trademark Office all information known to me to be material to patentability as defined in Title 37, Code of Federal Regulations, §1.56.

I HEREBY CLAIM foreign priority benefits under Title 35, United States Code §119(a)-(d) or § 365(b) of any foreign application(s) for patent or inventor's certificate, or §365(a) of any PCT international application which designated at least one country other than the United States of America, listed below and have also identified below any foreign application for patent or inventor's certificate or of any PCT international application having a filing date before that of the application on which priority is claimed.

Prior Foreign Application Number	Country	Foreign Filing Date	Priority Claimed?	Certified Copy Attached?

I HEREBY CLAIM the benefit under Title 35, United States Code § 119(e) of any United States provisional application(s) listed below.

U.S. Provisional Application Number	Filing Date
60/448,920	02/24/2003
60/484,658	07/07/2003
60/518,649	11/12/2003
60/532,900	12/30/2003

I HEREBY CLAIM the benefit under Title 35, United States Code, §120 of any United States application(s), or § 365(c) of any PCT international application designating the United States of America, listed below and, insofar as the subject matter of each of the claims of this application is not disclosed in the prior United States or PCT International application in the manner provided by the first paragraph of Title 35, United States Code, § 112, I acknowledge the duty to disclose information which is material to patentability as defined in Title 37, Code of Federal Regulations, § 1.56 which became available between the filing date of the prior application and the national or PCT international filing date of this application.

U.S. Parent Application Number	PCT Parent Application Number	Parent Filing Date	Parent Patent Number
29/196,714		01/02/2004	
29/196,713		01/02/2004	
29/196,712		01/02/2004	

I HEREBY APPOINT the registered attorneys and agents at Customer Number 22428

Customer Number: 22428

to have full power to prosecute this application and any continuations, divisions, reissues, and reexaminations thereof, to receive the patent, and to transact all business in the United States Patent and Trademark Office connected therewith.

I request that all correspondence be directed to:

Andrew E. Rawlins
FOLEY & LARDNER LLP
Customer Number: 22428

Telephone: (202) 672-5349
Facsimile: (202) 672-5399

I UNDERSTAND AND AGREE THAT the foregoing attorneys and agents appointed by me to prosecute this application do not personally represent me or my legal interests, but instead represent the interests of the legal owner(s) of the invention described in this application.

I FURTHER DECLARE THAT all statements made herein of my own knowledge are true, and that all statements made on information and belief are believed to be true; and further that these statements were made with the knowledge that willful false statements and the like so made are punishable by fine or imprisonment, or both, under Section 1001 of Title 18 of the United States Code, and that such willful false statements may jeopardize the validity of the application or any patent issuing thereon.

Name of first inventor	Radmond Vincent ARCETA
Residence	Manassas, Virginia
Citizenship	USA
Post Office Address	10503 Lariat Lane, Apt. 12 Manassas, Virginia 20109
Inventor's signature	
Date	7/20/04

Name of second inventor	Craig Kevin ROGERS
Residence	Stephens City, Virginia
Citizenship	USA
Post Office Address	102 Lariat Court Stephens City, Virginia 22655
Inventor's signature	Craig Kevin Rogers
Date	7/20/04

Name of third inventor	Kevin Thomas FITZPATRICK
Residence	Winchester, Virginia
Citizenship	USA
Post Office Address	325 George Street Winchester, Virginia 22601
Inventor's signature	
Date	07/20/04

Name of fourth inventor	Bryan Scott RITCHIE
Residence	Clear Brook, Virginia
Citizenship	USA
Post Office Address	779 Ruebuck Road Clear Brook, Virginia 22624
Inventor's signature	
Date	7/20/04

Name of fifth inventor	Marin John PHILPOTT
Residence	Winchester, Virginia
Citizenship	USA
Post Office Address	611 Manito Trail Winchester, Virginia 22602
Inventor's signature	Marin John Philpott
Date	7/21/04

Name of sixth inventor	Christina Louise FORTNER
Residence	Stephens City, Virginia
Citizenship	USA
Post Office Address	151 Lexington Court Stephens City, Virginia 22655
Inventor's signature	[illegible]
Date	July 29 2004

13281 U.S.PTO
022304

Atty. Dkt. No. 086554-1056

IN THE UNITED STATES PATENT AND TRADEMARK OFFICE

17510 U.S.PTO
10/783030
022304

Applicant: Radmond ARCETA et al.

Title: MEDICAL CART, MEDICATION MODULE, HEIGHT ADJUSTMENT MECHANISM, AND METHOD OF MEDICATION TRANSPORT

Appl. No.: Unassigned

Filing Date: February 23, 2004

Examiner: Unassigned

Art Unit: Unassigned

UTILITY PATENT APPLICATION TRANSMITTAL

Mail Stop PATENT APPLICATION
Commissioner for Patents
PO Box 1450
Alexandria, Virginia 22313-1450

Sir:

Transmitted herewith for filing under 37 C.F.R. § 1.53(b) is a nonprovisional utility patent application.

Enclosed are:

[X] Application Data Sheet (37 CFR 1.76) (5 pages).

[X] Specification, Claim(s), and Abstract (22 pages).

[X] Informal drawings (20 sheets, Figures 1-24).

002.1154651.1

U.S. PATENT APPLICATION

for

MEDICAL CART, MEDICATION MODULE, HEIGHT ADJUSTMENT MECHANISM, AND METHOD OF MEDICATION TRANSPORT

Inventors: Radmond Vincent ARCETA; Craig Kevin ROGERS; Kevin Thomas FITZPATRICK; Bryan Scott RITCHIE; Marin John PHILPOTT; and Christina Louise FORTNER

CROSS-REFERENCE TO RELATED APPLICATIONS

[0001] This application claims priority to U.S. Provisional Application Nos. 60/448,920 (filed February 24, 2003), 60/484,658 (filed July 7, 2003), and 60/518,649 (filed November 12, 2003). This application also claims priority to U.S. Design Patent Application Nos. 29/196,712, 29/196,713, 29/196,714 (all filed January 2, 2004) and to U.S. Design Patent Application Nos. _____, and _____ (filed concurrently herewith).

BACKGROUND OF THE INVENTION

[0002] The Institute of Medicine estimates that medical error is responsible for roughly 98,000 deaths annually, making it the seventh leading cause of death in the U.S. Accordingly, reducing the likelihood of error is an important issue not only for hospitals and doctors, but for society as a whole.

[0003] To alleviate some of these concerns, some hospitals provide nurses with medical carts on which a networked laptop computer facilitates the use of Electronic Medical Administration Records ("EMAR"). EMAR is an electronic record of medications and services administered by a healthcare professional through patient and medication identification via bar coding. When admitted into a hospital, the patient receives a bar coded wrist band for identification purposes. Also, healthcare professionals within the pharmacy bar code all the medications to be administered to the patients. Documentation of medications given at the point-of-care has reduced the number of errors by ensuring that the right patient is receiving the proper medication at the correct time. The EMAR software alerts the nurse if there is a discrepancy anytime during the medication administration process.

[0004] Unfortunately, however, these medical carts have proven unsatisfactory for a number of reasons. For example, the carts are not ergonomically designed. The average age of a nurse is 47 and roughly 83% of nurses report suffering chronic back pain. In addition, the existing EMAR carts suffer from a relative lack of work surface, lack of an area to dispose of

Application Data Sheet

Application Information

Application Type::	Regular
Subject Matter::	Utility
Suggested classification::	
Suggested Group Art Unit::	
CD-ROM or CD-R?::	None
Computer Readable Form (CRF)?::	No
Title::	MEDICAL CART, MEDICATION MODULE, HEIGHT ADJUSTMENT MECHANISM, AND METHOD OF MEDICATION TRANSPORT
Attorney Docket Number::	086554-1056
Request for Early Publication?::	No
Request for Non-Publication?::	No
Suggested Drawing Figure::	1
Total Drawing Sheets::	20
Small Entity?::	No
Petition included?::	No
Secrecy Order in Parent Appl.?::	No

Applicant Information

Applicant Authority Type::	Inventor
Primary Citizenship Country::	US
Status::	Full Capacity
Given Name::	Radmond Vincent
Family Name::	ARCETA
City of Residence::	Manassas
State or Province of Residence::	VA

Howard Exhibit 1033 - Page 195 of 277
Howard v. Capsa - IPR2023-01274

Country of Residence::	US
Street of mailing address::	10503 Lariat Lane, Apt. 12
City of mailing address::	Manassas
State or Province of mailing address::	VA
Postal or Zip Code of mailing address::	20109

Applicant Authority Type::	Inventor
Primary Citizenship Country::	US
Status::	Full Capacity
Given Name::	Craig Kevin
Family Name::	ROGERS
City of Residence::	Stephens City
State or Province of Residence::	VA
Country of Residence::	US
Street of mailing address::	102 Lariat Court
City of mailing address::	Stephens City
State or Province of mailing address::	VA
Postal or Zip Code of mailing address::	22655

Applicant Authority Type::	Inventor
Primary Citizenship Country::	US
Status::	Full Capacity
Given Name::	Kevin Thomas
Family Name::	FITZPATRICK
City of Residence::	Winchester
State or Province of Residence::	VA
Country of Residence::	US
Street of mailing address::	325 George Street

City of mailing address::	Winchester
State or Province of mailing address::	VA
Postal or Zip Code of mailing address::	22601

Applicant Authority Type::	Inventor
Primary Citizenship Country::	US
Status::	Full Capacity
Given Name::	Bryan Scott
Family Name::	RITCHIE
City of Residence::	Clear Brook
State or Province of Residence::	VA
Country of Residence::	US
Street of mailing address::	779 Ruebuck Road
City of mailing address::	Clear Brook
State or Province of mailing address::	VA
Postal or Zip Code of mailing address::	22624

Applicant Authority Type::	Inventor
Primary Citizenship Country::	US
Status::	Full Capacity
Given Name::	Marin John
Family Name::	PHILPOTT
City of Residence::	Winchester
State or Province of Residence::	VA
Country of Residence::	US
Street of mailing address::	611 Manito Trail
City of mailing address::	Winchester

State or Province of mailing address::	VA
Postal or Zip Code of mailing address::	22602

Applicant Authority Type::	Inventor
Primary Citizenship Country::	US
Status::	Full Capacity
Given Name::	Christina Louise
Family Name::	FORTNER
City of Residence::	Stephens City
State or Province of Residence::	VA
Country of Residence::	US
Street of mailing address::	151 Lexington Court
City of mailing address::	Stephens City
State or Province of mailing address::	VA
Postal or Zip Code of mailing address::	22655

Correspondence Information

Correspondence Customer Number::	22428
E-Mail address::	PTOMailWashington@Foley.com

Representative Information

Representative Customer Number::	22428	

Domestic Priority Information

Application::	Continuity Type::	Parent Application::	Parent Filing Date::
This Application	An application claiming the benefit under 35 USC 119(e)	60/448,920	02/24/2003
This Application	An application claiming the benefit under 35 USC 119(e)	60/484,658	07/07/2003
This Application	An application claiming the benefit under 35 USC 119(e)	60/518,649	11/12/2003
This Application	An application claiming priority to	29/196,714	01/02/2004
This Application	An application claiming priority to	29/196,713	01/02/2004
This Application	An application claiming priority to	29/196,712	01/02/2004

Foreign Priority Information

Country::	Application number::	Filing Date::	Priority Claimed::

Assignee Information

Assignee name:: RUBBERMAID COMMERCIAL PRODUCTS LLC

Howard Exhibit 1033 - Page 199 of 277
Howard v. Capsa - IPR2023-01274

UNITED STATES PATENT AND TRADEMARK OFFICE

UNITED STATES DEPARTMENT OF COMMERCE
United States Patent and Trademark Office
Address: COMMISSIONER FOR PATENTS
P.O. Box 1450
Alexandria, Virginia 22313-1450
www.uspto.gov

APPLICATION NUMBER	FILING OR 371(C) DATE	FIRST NAMED APPLICANT	ATTY. DOCKET NO./TITLE
13/187,328	07/20/2011	Radmond Vincent ARCETA	086554-1553

CONFIRMATION NO. 6052

PUBLICATION NOTICE

OC000000050903512

22428
FOLEY AND LARDNER LLP
SUITE 500
3000 K STREET NW
WASHINGTON, DC 20007

Title:MEDICAL CART, MEDICATION MODULE, HEIGHT ADJUSTMENT MECHANISM, AND METHOD OF MEDICATION TRANSPORT

Publication No.US-2011-0272902-A1
Publication Date:11/10/2011

NOTICE OF PUBLICATION OF APPLICATION

The above-identified application will be electronically published as a patent application publication pursuant to 37 CFR 1.211, et seq. The patent application publication number and publication date are set forth above.

The publication may be accessed through the USPTO's publically available Searchable Databases via the Internet at www.uspto.gov. The direct link to access the publication is currently http://www.uspto.gov/patft/.

The publication process established by the Office does not provide for mailing a copy of the publication to applicant. A copy of the publication may be obtained from the Office upon payment of the appropriate fee set forth in 37 CFR 1.19(a)(1). Orders for copies of patent application publications are handled by the USPTO's Office of Public Records. The Office of Public Records can be reached by telephone at (703) 308-9726 or (800) 972-6382, by facsimile at (703) 305-8759, by mail addressed to the United States Patent and Trademark Office, Office of Public Records, Alexandria, VA 22313-1450 or via the Internet.

In addition, information on the status of the application, including the mailing date of Office actions and the dates of receipt of correspondence filed in the Office, may also be accessed via the Internet through the Patent Electronic Business Center at www.uspto.gov using the public side of the Patent Application Information and Retrieval (PAIR) system. The direct link to access this status information is currently http://pair.uspto.gov/. Prior to publication, such status information is confidential and may only be obtained by applicant using the private side of PAIR.

Further assistance in electronically accessing the publication, or about PAIR, is available by calling the Patent Electronic Business Center at 1-866-217-9197.

Office of Data Managment, Application Assistance Unit (571) 272-4000, or (571) 272-4200, or 1-888-786-0101

PATENT APPLICATION FEE DETERMINATION RECORD Substitute for Form PTO-875	Application or Docket Number 13/187,328

APPLICATION AS FILED - PART I

FOR	(Column 1) NUMBER FILED	(Column 2) NUMBER EXTRA	SMALL ENTITY RATE($)	SMALL ENTITY FEE($)	OR	OTHER THAN SMALL ENTITY RATE($)	OTHER THAN SMALL ENTITY FEE($)
BASIC FEE (37 CFR 1.16(a), (b), or (c))	N/A	N/A	N/A			N/A	330
SEARCH FEE (37 CFR 1.16(k), (i), or (m))	N/A	N/A	N/A			N/A	540
EXAMINATION FEE (37 CFR 1.16(o), (p), or (q))	N/A	N/A	N/A			N/A	220
TOTAL CLAIMS (37 CFR 1.16(i))	24 minus 20 =	* 4			OR	x 52 =	208
INDEPENDENT CLAIMS (37 CFR 1.16(h))	3 minus 3 =	*				x 220 =	0.00
APPLICATION SIZE FEE (37 CFR 1.16(s))	If the specification and drawings exceed 100 sheets of paper, the application size fee due is $270 ($135 for small entity) for each additional 50 sheets or fraction thereof. See 35 U.S.C. 41(a)(1)(G) and 37 CFR 1.16(s).						0.00
MULTIPLE DEPENDENT CLAIM PRESENT (37 CFR 1.16(j))							0.00
* If the difference in column 1 is less than zero, enter "0" in column 2.			TOTAL			TOTAL	1298

APPLICATION AS AMENDED - PART II

		(Column 1) CLAIMS REMAINING AFTER AMENDMENT		(Column 2) HIGHEST NUMBER PREVIOUSLY PAID FOR	(Column 3) PRESENT EXTRA	SMALL ENTITY RATE($)	SMALL ENTITY ADDITIONAL FEE($)	OR	OTHER THAN SMALL ENTITY RATE($)	OTHER THAN SMALL ENTITY ADDITIONAL FEE($)
AMENDMENT A	Total (37 CFR 1.16(i))	*	Minus	**	=	x =		OR	x =	
AMENDMENT A	Independent (37 CFR 1.16(h))	*	Minus	***	=	x =		OR	x =	
AMENDMENT A	Application Size Fee (37 CFR 1.16(s))									
AMENDMENT A	FIRST PRESENTATION OF MULTIPLE DEPENDENT CLAIM (37 CFR 1.16(j))							OR		
						TOTAL ADD'L FEE		OR	TOTAL ADD'L FEE	

		(Column 1) CLAIMS REMAINING AFTER AMENDMENT		(Column 2) HIGHEST NUMBER PREVIOUSLY PAID FOR	(Column 3) PRESENT EXTRA	RATE($)	ADDITIONAL FEE($)	OR	RATE($)	ADDITIONAL FEE($)
AMENDMENT B	Total (37 CFR 1.16(i))	*	Minus	**	=	x =		OR	x =	
AMENDMENT B	Independent (37 CFR 1.16(h))	*	Minus	***	=	x =		OR	x =	
AMENDMENT B	Application Size Fee (37 CFR 1.16(s))									
AMENDMENT B	FIRST PRESENTATION OF MULTIPLE DEPENDENT CLAIM (37 CFR 1.16(j))							OR		
						TOTAL ADD'L FEE		OR	TOTAL ADD'L FEE	

* If the entry in column 1 is less than the entry in column 2, write "0" in column 3.
** If the "Highest Number Previously Paid For" IN THIS SPACE is less than 20, enter "20".
*** If the "Highest Number Previously Paid For" IN THIS SPACE is less than 3, enter "3".
The "Highest Number Previously Paid For" (Total or Independent) is the highest found in the appropriate box in column 1.

UNITED STATES PATENT AND TRADEMARK OFFICE

UNITED STATES DEPARTMENT OF COMMERCE
United States Patent and Trademark Office
Address: COMMISSIONER FOR PATENTS
P.O. Box 1450
Alexandria, Virginia 22313-1450
www.uspto.gov

APPLICATION NUMBER	FILING or 371(c) DATE	GRP ART UNIT	FIL FEE REC'D	ATTY.DOCKET.NO	TOT CLAIMS	IND CLAIMS
13/187,328	07/20/2011	3651	1298	086554-1553	24	3

CONFIRMATION NO. 6052

22428
FOLEY AND LARDNER LLP
SUITE 500
3000 K STREET NW
WASHINGTON, DC 20007

FILING RECEIPT

OC000000049048120

Date Mailed: 08/02/2011

Receipt is acknowledged of this non-provisional patent application. The application will be taken up for examination in due course. Applicant will be notified as to the results of the examination. Any correspondence concerning the application must include the following identification information: the U.S. APPLICATION NUMBER, FILING DATE, NAME OF APPLICANT, and TITLE OF INVENTION. Fees transmitted by check or draft are subject to collection. Please verify the accuracy of the data presented on this receipt. **If an error is noted on this Filing Receipt, please submit a written request for a Filing Receipt Correction. Please provide a copy of this Filing Receipt with the changes noted thereon. If you received a "Notice to File Missing Parts" for this application, please submit any corrections to this Filing Receipt with your reply to the Notice. When the USPTO processes the reply to the Notice, the USPTO will generate another Filing Receipt incorporating the requested corrections**

Applicant(s)

Radmond Vincent ARCETA, Manassas, VA;
Craig Kevin Rogers, Stephens City, VA;
Kevin Thomas Fitzpatrick, Winchester, VA;
Bryan Scott Ritchie, Clear Brook, VA;
Marin John Philpott, Winchester, VA;
Christina Louise Fortner, Stephens City, VA;

Assignment For Published Patent Application

Rubbermaid Incorporated

Power of Attorney: The patent practitioners associated with Customer Number 22428

Domestic Priority data as claimed by applicant

This application is a CON of 12/550,771 08/31/2009
which is a DIV of 12/193,346 08/18/2008 PAT 7,594,668
which is a CON of 10/783,030 02/23/2004 ABN
which claims benefit of 60/448,920 02/24/2003
and claims benefit of 60/484,658 07/07/2003
and claims benefit of 60/518,649 11/12/2003
and claims benefit of 60/532,900 12/30/2003

Foreign Applications (You may be eligible to benefit from the **Patent Prosecution Highway** program at the USPTO. Please see http://www.uspto.gov for more information.)

If Required, Foreign Filing License Granted: 07/29/2011

The country code and number of your priority application, to be used for filing abroad under the Paris Convention, is **US 13/187,328**

Projected Publication Date: 11/10/2011

Non-Publication Request: No

Early Publication Request: No
Title

MEDICAL CART, MEDICATION MODULE, HEIGHT ADJUSTMENT MECHANISM, AND METHOD OF MEDICATION TRANSPORT

Preliminary Class

700

PROTECTING YOUR INVENTION OUTSIDE THE UNITED STATES

Since the rights granted by a U.S. patent extend only throughout the territory of the United States and have no effect in a foreign country, an inventor who wishes patent protection in another country must apply for a patent in a specific country or in regional patent offices. Applicants may wish to consider the filing of an international application under the Patent Cooperation Treaty (PCT). An international (PCT) application generally has the same effect as a regular national patent application in each PCT-member country. The PCT process **simplifies** the filing of patent applications on the same invention in member countries, but **does not result** in a grant of "an international patent" and does not eliminate the need of applicants to file additional documents and fees in countries where patent protection is desired.

Almost every country has its own patent law, and a person desiring a patent in a particular country must make an application for patent in that country in accordance with its particular laws. Since the laws of many countries differ in various respects from the patent law of the United States, applicants are advised to seek guidance from specific foreign countries to ensure that patent rights are not lost prematurely.

Applicants also are advised that in the case of inventions made in the United States, the Director of the USPTO must issue a license before applicants can apply for a patent in a foreign country. The filing of a U.S. patent application serves as a request for a foreign filing license. The application's filing receipt contains further information and guidance as to the status of applicant's license for foreign filing.

Applicants may wish to consult the USPTO booklet, "General Information Concerning Patents" (specifically, the section entitled "Treaties and Foreign Patents") for more information on timeframes and deadlines for filing foreign patent applications. The guide is available either by contacting the USPTO Contact Center at 800-786-9199, or it can be viewed on the USPTO website at http://www.uspto.gov/web/offices/pac/doc/general/index.html.

For information on preventing theft of your intellectual property (patents, trademarks and copyrights), you may wish to consult the U.S. Government website, http://www.stopfakes.gov. Part of a Department of Commerce initiative, this website includes self-help "toolkits" giving innovators guidance on how to protect intellectual property in specific countries such as China, Korea and Mexico. For questions regarding patent enforcement issues, applicants may call the U.S. Government hotline at 1-866-999-HALT (1-866-999-4158).

LICENSE FOR FOREIGN FILING UNDER

Title 35, United States Code, Section 184

Title 37, Code of Federal Regulations, 5.11 & 5.15

GRANTED

The applicant has been granted a license under 35 U.S.C. 184, if the phrase "IF REQUIRED, FOREIGN FILING LICENSE GRANTED" followed by a date appears on this form. Such licenses are issued in all applications where the conditions for issuance of a license have been met, regardless of whether or not a license may be required as set forth in 37 CFR 5.15. The scope and limitations of this license are set forth in 37 CFR 5.15(a) unless an earlier license has been issued under 37 CFR 5.15(b). The license is subject to revocation upon written notification. The date indicated is the effective date of the license, unless an earlier license of similar scope has been granted under 37 CFR 5.13 or 5.14.

This license is to be retained by the licensee and may be used at any time on or after the effective date thereof unless it is revoked. This license is automatically transferred to any related applications(s) filed under 37 CFR 1.53(d). This license is not retroactive.

The grant of a license does not in any way lessen the responsibility of a licensee for the security of the subject matter as imposed by any Government contract or the provisions of existing laws relating to espionage and the national security or the export of technical data. Licensees should apprise themselves of current regulations especially with respect to certain countries, of other agencies, particularly the Office of Defense Trade Controls, Department of State (with respect to Arms, Munitions and Implements of War (22 CFR 121-128)); the Bureau of Industry and Security, Department of Commerce (15 CFR parts 730-774); the Office of Foreign AssetsControl, Department of Treasury (31 CFR Parts 500+) and the Department of Energy.

NOT GRANTED

No license under 35 U.S.C. 184 has been granted at this time, if the phrase "IF REQUIRED, FOREIGN FILING LICENSE GRANTED" DOES NOT appear on this form. Applicant may still petition for a license under 37 CFR 5.12, if a license is desired before the expiration of 6 months from the filing date of the application. If 6 months has lapsed from the filing date of this application and the licensee has not received any indication of a secrecy order under 35 U.S.C. 181, the licensee may foreign file the application pursuant to 37 CFR 5.15(b).

IN THE UNITED STATES PATENT AND TRADEMARK OFFICE

Applicant: Radmond ARCETA et al.

Title: MEDICAL CART, MEDICATION MODULE, HEIGHT ADJUSTMENT MECHANISM, AND METHOD OF MEDICATION TRANSPORT

Prior Appl. No.: 12/550,771

Prior Appl. Filing Date: 8/31/2009

Examiner: Unassigned

Art Unit: Unassigned

CONTINUING PATENT APPLICATION TRANSMITTAL LETTER

Commissioner for Patents
P.O. Box 1450
Alexandria, VA 22313-1450

Sir:

Transmitted herewith for filing under 37 C.F.R. § 1.53(b) is a:

[**X**] Continuation [ ] Division [ ] Continuation-In-Part (CIP)

of the above-identified copending prior application in which no patenting, abandonment, or termination of proceedings has occurred. Priority to the above-identified prior application is hereby claimed under 35 U.S.C. § 120 for this continuing application. The entire disclosure of the above-identified prior application is considered as being part of the disclosure of the accompanying continuing application and is hereby incorporated by reference therein.

[ ] Applicant claims small entity status under 37 CFR 1.27.

Enclosed are:

[**X**] Description, Claim(s), and Abstract (26 pages).

[**X**] Formal drawings (20 sheets, Figures 1-24).

[**X**] Declaration and Power of Attorney (5 pages).

[**X**] Information Disclosure Statement.

[**X**] Form PTO/SB/08 with copies of 42 listed reference(s).

[**X**] Application Data Sheet (37 CFR 1.76).

The adjustment to the number of sheets for EFS-Web filing follows:

Number of Sheets		**EFS-Web Adjustment**	**Number of Sheets for EFS-Web**
46	x	75%	35

The filing fee is calculated below:

	Number Filed		**Included in Basic Fee**		**Extra**		Rate		Fee Totals
Basic Filing Fee							$330.00	=	$330.00
Search Fee							$540.00		$540.00
Examination Fee							$220.00		$220.00
Size Fee	35	-	100	=	0	x	$270.00		$0.00
Total Claims:	24	-	20	=	4	x	$52.00	=	$208.00
Independents:	3	-	3	=	0	x	$220.00	=	$0.00
If any Multiple Dependent Claim(s) present:						+	$390.00	=	$0.00
Surcharge under 37 CFR 1.16(e) for late filing of Executed Declaration or late payment of filing fee						+	$130.00	=	$0.00
							SUBTOTAL:	=	$1298.00
[ ]							Small Entity Fees Apply (subtract ½ of above):	=	0
							Basic Filing Fee Reduction for Filing via EFS-Web		$0.00
							TOTAL FILING FEE:	=	$1298.00
Assignment Recordation Fee:						+	$40.00	=	$0.00
Processing Fee under 37 CFR 1.17(i) for Late Filing of English Translation of Application:						+	$130.00	=	$0.00
TOTAL FEE								**=**	**$1298.00**

The above-identified fees of $1298.00 are being paid by credit card via EFS-Web.

The Commissioner is hereby authorized to charge any additional fees which may be required regarding this application under 37 C.F.R. §§ 1.16-1.17, or credit any overpayment, to Deposit Account No. 19-0741. Should no proper payment be enclosed herewith, as by the credit card payment instructions in EFS-Web being incorrect or absent, resulting in a rejected or incorrect credit card transaction, the Commissioner is authorized to charge the unpaid amount to Deposit Account No. 19-0741.

Please direct all correspondence to the undersigned attorney or agent at the address indicated below.

Respectfully submitted,

Date July 20, 2011

By

FOLEY & LARDNER LLP
Customer Number: 22428
Telephone: (202) 672-5349
Facsimile: (202) 672-5399

Andrew E. Rawlins
Attorney for Applicant
Registration No. 34,702

Application Data Sheet

Application Information

Application Type::	Regular
Subject Matter::	Utility
Suggested classification::	
Suggested Group Art Unit::	
CD-ROM or CD-R?::	None
Computer Readable Form (CRF)?::	No
Title::	MEDICAL CART, MEDICATION MODULE, HEIGHT ADJUSTMENT MECHANISM, AND METHOD OF MEDICATION TRANSPORT
Attorney Docket Number::	086554-1553
Request for Early Publication?::	No
Request for Non-Publication?::	No
Suggested Drawing Figure::	1
Total Drawing Sheets::	20
Small Entity?::	No
Petition included?::	No
Secrecy Order in Parent Appl.?::	No

Applicant Information

Applicant Authority Type::	Inventor
Primary Citizenship Country::	US
Status::	Full Capacity
Given Name::	Radmond Vincent
Family Name::	ARCETA
City of Residence::	Manassas
State or Province of Residence::	VA

Country of Residence::	US
Street of mailing address::	10503 Lariat Lane, Apt. 12
City of mailing address::	Manassas
State or Province of mailing address::	VA
Postal or Zip Code of mailing address::	20109

Applicant Authority Type::	Inventor
Primary Citizenship Country::	US
Status::	Full Capacity
Given Name::	Craig Kevin
Family Name::	ROGERS
City of Residence::	Stephens City
State or Province of Residence::	VA
Country of Residence::	US
Street of mailing address::	102 Lariat Court
City of mailing address::	Stephens City
State or Province of mailing address::	VA
Postal or Zip Code of mailing address::	22655

Applicant Authority Type::	Inventor
Primary Citizenship Country::	US
Status::	Full Capacity
Given Name::	Kevin Thomas
Family Name::	FITZPATRICK
City of Residence::	Winchester
State or Province of Residence::	VA
Country of Residence::	US
Street of mailing address::	325 George Street

City of mailing address::	Winchester
State or Province of mailing address::	VA
Postal or Zip Code of mailing address::	22601

Applicant Authority Type::	Inventor
Primary Citizenship Country::	US
Status::	Full Capacity
Given Name::	Bryan Scott
Family Name::	RITCHIE
City of Residence::	Clear Brook
State or Province of Residence::	VA
Country of Residence::	US
Street of mailing address::	779 Ruebuck Road
City of mailing address::	Clear Brook
State or Province of mailing address::	VA
Postal or Zip Code of mailing address::	22624

Applicant Authority Type::	Inventor
Primary Citizenship Country::	US
Status::	Full Capacity
Given Name::	Marin John
Family Name::	PHILPOTT
City of Residence::	Winchester
State or Province of Residence::	VA
Country of Residence::	US
Street of mailing address::	611 Manito Trail
City of mailing address::	Winchester

State or Province of mailing address::	VA
Postal or Zip Code of mailing address::	22602

Applicant Authority Type::	Inventor
Primary Citizenship Country::	US
Status::	Full Capacity
Given Name::	Christina Louise
Family Name::	FORTNER
City of Residence::	Stephens City
State or Province of Residence::	VA
Country of Residence::	US
Street of mailing address::	151 Lexington Court
City of mailing address::	Stephens City
State or Province of mailing address::	VA
Postal or Zip Code of mailing address::	22655

Correspondence Information

Correspondence Customer Number::	22428
E-Mail address::	PTOMailWashington@foley.com

Representative Information

Representative Customer Number::	22428	

Domestic Priority Information

Application::	Continuity Type::	Parent Application::	Parent Filing Date::
This Application	Continuation of	12/550,771	8/31/2009
12/550,771	Division of	12/193,346	8/18/2008
12/193,346	Continuation of	10/783,030	2/23/2004
10/783,030	An application claiming priority to	29/196,714	1/2/2004
10/783,030	An application claiming priority to	29/196,713	1/2/2004
10/783,030	An application claiming priority to	29/196,712	1/2/2004
10/783,030	An application claiming the benefit under 35 USC 119(e)	60/448,920	2/24/2003
10/783,030	An application claiming the benefit under 35 USC 119(e)	60/484,658	7/7/2003
10/783,030	An application claiming the benefit under 35 USC 119(e)	60/518,649	11/12/2003
10/783,030	An application claiming the benefit under 35 USC 119(e)	60/532,900	12/30/2003

Foreign Priority Information

Country::	Application number::	Filing Date::	Priority Claimed::

Assignee Information

Assignee Name:: Rubbermaid Incorporated

U.S. PATENT APPLICATION
for
MEDICAL CART, MEDICATION MODULE, HEIGHT ADJUSTMENT MECHANISM, AND METHOD OF MEDICATION TRANSPORT

Inventors: Radmond Vincent ARCETA; Craig Kevin ROGERS; Kevin Thomas FITZPATRICK; Bryan Scott RITCHIE; Marin John PHILPOTT; and Christina Louise FORTNER

CROSS-REFERENCE TO RELATED APPLICATIONS

[0001] The present application is a continuation of U.S. Application No. 12/550,771 (filed August 31, 2009) which is a divisional of U.S. Application No. 12/193,346 (filed August 18, 2008) which is a continuation of U.S. Application No. 10/783,030 (filed February 23, 2004), and also claims priority to U.S. Provisional Application Nos. 60/448,920 (filed February 24, 2003), 60/484,658 (filed July 7, 2003), 60/518,649 (filed November 12, 2003) and 60/532,900 (filed December 30, 2003) and to U.S. Design Patent Application Nos. 29/196,712, 29/196,713, 29/196,714 (all filed January 2, 2004). The foregoing applications are incorporated by reference herein in their entirety.

BACKGROUND OF THE INVENTION

[0002] The Institute of Medicine estimates that medical error is responsible for roughly 98,000 deaths annually, making it the seventh leading cause of death in the U.S. Accordingly, reducing the likelihood of error is an important issue not only for hospitals and doctors, but for society as a whole.

[0003] To alleviate some of these concerns, some hospitals provide nurses with medical carts on which a networked laptop computer facilitates the use of Electronic Medical Administration Records ("EMAR"). EMAR is an electronic record of medications and services administered by a healthcare professional through patient and medication identification via bar coding. When admitted into a hospital, the patient receives a bar coded wrist band for identification purposes. Also, healthcare professionals within the pharmacy bar code all the medications to be administered to the patients. Documentation of medications given at the point-of-care has reduced the number of errors by ensuring that the right patient is receiving the proper medication at the correct time. The EMAR software

alerts the nurse if there is a discrepancy anytime during the medication administration process.

[0004] Unfortunately, however, these medical carts have proven unsatisfactory for a number of reasons. For example, the carts are not ergonomically designed. The average age of a nurse is 47 and roughly 83% of nurses report suffering chronic back pain. In addition, the existing EMAR carts suffer from a relative lack of work surface, lack of an area to dispose of refuse, bad placement of medication drawers, lack of storage space, and relative inability to be usefully raised and lowered to enable the nurse to work when either standing or sitting.

[0005] In many hospital environments, a nurse must walk to a central location (e.g., a pyxis machine) at which medication is handled to obtain medication for a particular patient. Often, to avoid giving the wrong medication to a patient, the nurse only carries one patient's medication at a time. This control, however, does not preclude the potential for the medication to be given to the wrong patient such as, for example, if the nurse is sidetracked and asks another nurse to administer the medication.

[0006] In addition to the above-mentioned concerns, when one takes into account the number of patients which a nurse must handle, the result is that the nurse must spend a considerable amount of time walking between the central location and each patient's bedside. This problem is exacerbated in some situations in which the central location is located a significant distance from one or more of the patients for which the nurse is responsible. Moreover, the cost associated with paying nurses to continuously travel to and from various medication locations may be relatively insignificant at the level of a particular nurse but is quite significant to the medical industry as a whole.

[0007] What is needed, therefore, is an apparatus and a methodology by which medical error may be reduced and by which the amount of time a nurse spends obtaining and researching medication may be reduced, without compromising safety.

SUMMARY OF THE INVENTION

[0008] An aspect of the present invention relates to a cart including a work platform having a work surface and at least one compartment, a base, and a height adjustment mechanism for adjusting the height of the work platform relative to the base. The compartment can be a drawer. The work platform can accommodate drawers of different sizes. Preferably the compartment is configured to be unlocked via a keyless entry system.

[0009] The work platform can include a laptop platform that can be moved in at least one of a forward and a rearward direction. The work platform also can include a work surface that can be moved in at least one of a leftward and rightward direction. The work platform also can include a barcode scanner holder.

[0010] The cart can include a plurality of rolling members connected to the base. The work platform can include sidewalls and the rolling members can be disposed on the base outside of the sidewalls.

[0011] Another aspect of the present invention includes a cart system comprising a first cart and a second cart. The first cart can include at least one compartment and a base having rolling members to permit movement of the first cart. The second cart can include a plurality of compartments and a base having rolling members to permit movement of the second cart. The first and second cart can include linking structure that permits the first and second carts to be connected together for movement.

[0012] The first cart can include a work platform having a work surface and that houses the at least one compartment. The first cart can include a plurality of compartments.

[0013] Preferably the base of the first cart is configured to nest with the base of the second cart. The second cart can include a housing for supporting the plurality of compartments and the rolling members can be disposed on the base outside of the sidewalls.

[0014] Another aspect of the present invention relates to a method of medication transport. The method can include the steps of loading, at a first location, medication into first and second carts, connecting the first and second carts to form a cart train, moving the cart train to a second location when loaded with medication, separating the first and second carts after moving the cart train to the second location, moving the first cart from the second location to a third location, removing medication from the at least one cart at the third location, and returning the first and second carts to the first location.

[0015] Another aspect of the present invention relates to a method of medication transport comprising the steps of loading, at a first location, medication into a compartment(s) in a medication module(s), moving the medication module to a second location, transferring medication from the medication module to a medical cart, and administering medicine from the medical cart to a patient.

[0016] Another aspect of the present invention relates to a method of medication transport comprising the steps of loading, at a first location, medication into a compartment(s) in a

medication module(s), moving the medication module to a second location, exchanging the compartments of the medication module(s) with the compartments of a medical cart(s) at the second location, returning the medication module(s) having the compartments of the medical cart(s) therein to the first location for refilling while the medical cart(s) having the compartments of the medication module(s) therein are being taken to patients.

[0017] These and other features, aspects, and advantages of the present invention will become more apparent from the following description, appended claims, and accompanying exemplary embodiments shown in the drawings.

BRIEF DESCRIPTION OF THE DRAWINGS

[0018] Figure 1 is a perspective view of a first embodiment of a medical cart according to the present invention;

[0019] Figures 2A and 2B are perspective views of a slidable laptop computer surface of the medical cart of Figure 1, the laptop surface being moveable forward (Figure 2A) and rearward (Figure 2B);

[0020] Figures 3A and 3B are top and bottom exploded perspective views of three panels of a sliding platform of the medical cart of Figure 1;

[0021] Figure 3C is an enlarged view of a connection mechanism of the sliding platform of Figures 3A and 3B

[0022] Figures 4A and 4B are top plan views of the assembled sliding platform in which the platform has been pulled out to the right (Figure 4A) and to the left (Figure 4B);

[0023] Figures 5A-5C are close-up views of a barcode scanner and barcode scanner holder of the medical cart of Figure 1;

[0024] Figures 6A-6C are perspective views of a clipboard of the medical cart of Figure 1;

[0025] Figure 7 is a perspective view of a work platform of the medical cart of Figure 1 without compartments;

[0026] Figure 8 is a perspective view of different sized compartments configured to be inserted into the medical cart of Figure 1;

[0027] Figure 9A is an exploded view of parts of a height adjustment mechanism of the medical cart of Figure 1;

[0028] Figure 9B is a perspective view of the height adjustment mechanism of Figure 9A in assembled form;

[0029] Figures 10A and 10B are bottom and top perspective views of the height adjustment mechanism of Figures 9A and 9B being connected to the medical cart of Figure 1;

[0030] Figure 11 is a rear perspective view of the medical cart of Figure 1 having a laptop computer thereon and showing a hatch being removed;

[0031] Figure 12 is cross-sectional side view of the medical cart of Figure 1;

[0032] Figure 13 is a rear perspective view of the medical cart of Figure 1 having both a hatch and a base cover removed;

[0033] Figure 14 is a rear perspective view of the medical cart of Figure 1 showing a retractable power cord;

[0034] Figure 15 is an underside plan view of the medical cart of Figure 1 showing a first locking mechanism;

[0035] Figure 16 is a perspective view of a second embodiment of a medical cart according to the present invention;

[0036] Figure 17 is a perspective view of a first embodiment of a medication module according to the present invention;

[0037] Figure 18 is a side plan view of the medication module of Figure 17;

[0038] Figure 19 is an underside plan view of the medication module of Figure 17 showing first and second locking mechanisms;

[0039] Figure 20 is an underside perspective view of a plurality of medication modules of the type shown in Figure 17 releaseably engaged to form a train;

[0040] Figures 21A and 21B are front and back perspective views of a medical cart of the type shown in Figure 16 releaseably engaged with a medication module of the type shown in Figure 17;

[0041] Figure 22 is a breakaway perspective view of the medication module of Figure 17 showing a portion of a keyless entry system;

[0042] Figure 23 shows a cross-sectional top view of the medication module of Figure 17 showing a portion of a keyless entry system; and

[0043] Figure 24 is a diagram of steps for an embodiment of a method of medication transport according to the present invention, which can be performed using a plurality of medication modules of the type shown in Figure 17 and a plurality of medical carts of the types shown in Figures 1 and 16.

DETAILED DESCRIPTION

[0044] Presently preferred embodiments of the invention are illustrated in the drawings. An effort has been made to use the same or like reference numbers throughout the drawings to refer to the same or like parts.

[0045] A first embodiment of a medical cart 500 is shown in Figures 1-15. With respect to Figure 1, it can be seen that the medical cart 500 includes a work platform 340, a support mechanism 320 that supports and adjusts the height of the work platform 340, and a base 310.

[0046] The work platform 340 can include a bi-directional laptop platform 370, a bi-directional work surface 350, an adjustable barcode scanner holder 380, an adjustable clipboard 390, one or more lockable compartments 530, a plurality of top bins 342, removable side bins 520, cup holders 344, and/or a keypad 238. Because each of these items is provided on the work platform 340, a user can ergonomically access each of these items as the work platform 340 is raised or lowered.

[0047] The laptop platform 370 can be configured to support, for example, a laptop computer 900 (shown in Figures 6A and 7). Conventional structure can be provided on the laptop platform 370 to hold the laptop computer in place. The laptop platform 370 can have an arcuate front face 376 at a front portion. The arcuate front face 376 may be designed to correspond to the torso of a user for ergonomic reasons.

[0048] The laptop platform 370 can be locked in a central position (Figure 1) or adjusted ergonomically to a forward (Figure 2A) or rearward (Figure 2B) position. As an example of a use of the present invention, when a user lowers the work platform 340 to a low position and moves the laptop platform 370 to a forward position, the user can sit and the work platform 340 functions as a desk. A transfer structure 800 allows the laptop platform 370 to be moved between those positions. The transfer structure 800 can include stationary rails 372 mounted on body portions 802 of the work platform 340 and rails runners 373 mounted on the laptop platform 370, as shown in Figures 2A and 2B.

[0049] Notches 374, which include sloped surfaces 375 and cavities 377, are formed along the rail runners 373. The notches 374 are configured to engage posts 371 formed along the stationary rails 372. When the laptop platform 370 is moved by the transfer structure 800, the sloped surfaces 375 of the notches 374 are configured to engage the posts 371. By continuing to push (or pull) the laptop platform 370, the posts 371 will ride up the sloped

surfaces 375 and be deposited in cavities 377 in the notches 374, thereby releasably immobilizing the laptop platform 370 with respect to the work platform 340.

[0050] In one embodiment, one notch 374 may be provided on each of the rail runners 373 and corresponding posts 371 may be provided on the stationary rails 372. As a result, the laptop platform 370 can be releaseably locked with respect to the work platform 340. For example, as shown in Figures 2A and 2B, the posts 371 may be provided at rear portions of the stationary rails 372 and the notches 374 may be similarly provided at rear portions of the rail runners 373. As a result, the laptop platform 370 will be releaseably locked with respect to the work platform 340 when in a central position shown in Figure 1.

[0051] In another embodiment, each of the stationary rails 372 may include at least three posts 371, one provided at each end of the stationary rails 372 and one provided in a central portion of the stationary rails 372. Correspondingly, each of the rail runners 373 may include three notches 374, one provided at each end of the rails runners 373 and one provided in a central portion of the rail runners 373. As a result, the surface 370 can be releasably immobilized with respect to the work platform 340 in a forward position (Figure 2A), a rearward position (Figure 2B), and a central position (Figure 1). In the forward position (Figure 2A), the rearmost notches 374 may be engaged with the forwardmost posts 371. Similarly, in the rearward position (Figure 2B), the fowardmost notches 374 may be engaged with the rearmost posts 371. Finally, in the central position, all three posts 371 on each stationary rail 372 may be engaged with the corresponding cavity 377 of the notches 374 of the rail runners 373.

[0052] In another embodiment, the contact between the stationary rails 372 and the rail runners 373 can be frictionally enhanced such that the laptop platform 370 does not readily slide with respect to the work platform 340. Rather, force (i.e., either pushing or pulling on the laptop platform 370) will be required to overcome the frictional engagement between the stationary rails 372 and the rail runners 373. As a result, the laptop platform 370 can be relatively fixed with respect to the work platform 340 at any location between a forwardmost position (Figure 2A) and a rearmost position (Figure 2B). In addition, one or more notches 374/posts 371 may be combined with the frictional engagement between the stationary rails 372 and the rail runners 373.

[0053] When the laptop platform 370 is pushed forward or rearward, it can expose a secondary work area 379 provided below the laptop platform 370. The secondary work area

379 can be particularly sturdy. For example, it can be sturdy enough to enable a user to crush pills on the secondary work area 379. In addition, the secondary work area 379 may be provided with a rim 378. The rim 378 may reduce the likelihood of medication rolling off the medical cart 500 such as, for example, when a nurse tries to crush pills on the secondary work area 379.

[0054] The bi-directional work surface 350 is shown in Figures 3A, 3B, 3C, 4A, and 4B. As shown in Figures 3A and 3B, the bi-directional work surface 350 is positioned below the laptop platform 370. The bi-directional work surface 350 is designed to move through a slot 343 in the side 341 of the work platform 340 in leftward and rightward directions to provide additional work space.

[0055] The work surface 350 can have channels 355, 357 on its underside that engage ribs 358, 359 formed on a plate 361 provided on a body 329 of the work platform 340. The channels 355, 357 are sized to receive the ribs 358, 359 of the plate 361. To prevent the bi-directional work surface 350 from sliding off the plate 361, the channels 355, 357 are closed at one end. As a result, when the second bi-directional work surface 350 slides to the right (as shown in Figure 4A), the channels 355 will slide along the ribs 358, 359. At one point, the channels 355 will slide past the ribs 359 on the left side of the plate 361 and will continue to slide along ribs 358 on the right side of the plate 361. The second bi-directional work surface 350 will stop sliding, however, when the closed ends 363 of the channels 355 abut the inner ends of ribs 358.

[0056] Similarly, when the second bi-directional work surface 350 slides to the left (as shown in Figure 4B), the channels 357 will slide along the ribs 358, 359. At one point, the channels 357 will slide past the ribs 358 on the right side of the plate 361 and will continue to slide along ribs 359 on the left side of the plate 361. The second bi-directional work surface 350 will stop sliding, however, when the closed ends 365 of the channels 357 abut the inner ends of the ribs 359.

[0057] When the bi-directional work surface 350 slides to the right or to the left, it slides in an arcuate path as a result of the channels 355, 357 and ribs 358, 369 (and the work surface 350) being arcuate in shape. As a result, the second bi-directional work surface 350 is positioned closer to a user standing or sitting in front of the medical cart 500 when it is in an extended position.

[0058] A releaseable locking mechanism 1000 (shown best in Figure 3C) can be provided to hold the work surface 350 in a center position and to prevent it from sliding unintentionally. For example, as shown in Figures 3B and 3C, the second bi-directional work surface 350 may be provided with a projection 354 having sloped surfaces 347 and a nesting region 346. Correspondingly, the plate 361 may be provided with a moveable pin 356 which may be, for example, a ball spring plunger that is spring-biased in upward direction (i.e., toward the work surface 350). As a result, when the bi-directional work surface 350 is pushed into the work platform 340 (from either the left or the right), the moveable pin 356 will initially be pushed downward relative to the plate 361 by the sloped surface 347 of the projection 354. Subsequently, the pin 356 will extend upwards into the nesting region 346 of the projection 354 and become frictionally engaged therein, thereby releasably locking the work surface 350 with respect to the work platform 340. To move the work surface 350 out of the locked position, a force is applied to one of the exposed ends of the second bi-directional work surface 350 (to push the moveable pin 356 out of the nesting region 346 of the curved projection 354), thereby enabling the bi-directional work surface 350 to slide freely along the ribs 358, 359.

[0059] Of course, the type of locking mechanism may be changed. Further, additional movable pins 356 may be provided in the plate 361 so as to enable the second bi-directional work surface 350 to be releasably locked in a corresponding number of positions.

[0060] As shown in Figures 5A-5C, the adjustable barcode scanner holder 380 includes a flexible neck 382, a base 386, and a holder portion 384. As a result of the neck 382 being flexible, the position of the holder portion 384 can be adjusted. For example, the vertical distance between the holder portion 384 and the laptop platform 370 can be adjusted. Specifically, the orientation of the holder portion 384 can be adjusted between, for example, a holding position in which a barcode scanner 385 is maintained in an upright holding position (Figure 5B) and a hands-free scanning position in which the holder portion 384 is adapted to hold an inverted (i.e., facing downward) barcode scanner 385. By holding the scanner 385 in the inverted position, the holder portion 384 enables a user to pass documents between the scanner 385 and the laptop platform 370 (Figure 5C), without having to manually hold the scanner 385 (i.e., the scanner 385 may be operated in a hands-free manner). Moreover, the flexibility of the neck 382 enables the holder portion 384 to be adjusted to accommodate various barcode scanner sizes. In addition, the neck 382 is designed to rotate at the base 386

thereof so that a user can turn the barcode scanner holder 380 away from the laptop platform 370, if desired.

[0061] The barcode scanner 385 may be an integral part of the medical cart 500 or may be detachable therefrom. If the barcode scanner 385 is an integral component of the medical cart 500, its power cord 387 may be inserted into a power cord passage 327 and connected to an electrical receptacle 904, as later explained in detail with respect to Figures 11-13. By way of contrast, the barcode scanner 385 may receive the power necessary to operate it from a laptop computer 900 when it is plugged into a USB port of the laptop computer 900.

[0062] As shown in Figures 6A-6C, the adjustable clipboard 390 is also designed to hold items in a hands-free manner. The clipboard 390 includes a clip 392 for holding items, such as paper. The clipboard 390 also includes conventional rails 394 attached to an L-shaped metal bracket 393 which connects the clipboard 390 to the laptop platform 370, as shown best in Figure 6C. The clipboard 390 is designed to slide along the rails 394 to the left of the medical cart 500. As a result, if a user is working on a laptop computer provided on the laptop platform 370, the clipboard 390 can be moved from a central position (Figure 6B) to left of the laptop computer to allow the user to view the documents clipped to the clip 392, as shown in Figures 6A and 6C. Of course, in other embodiments, the clipboard 390 could be designed to move to the right.

[0063] The plurality of compartments 530 face the user and move up and down with the work platform 340 (i.e., they remain in the same position relative to the laptop platform 370), which are ergonomically desirable features. The compartments 530 may be provided with labeling portions 570, which allow labels to be displayed on the compartments 530. The plurality of compartments 530 enable a user (e.g., a nurse) to separately maintain medication for particular patients or for a particular room. For example, if a nurse is responsible for eight patients in a hospital ward, the medical cart 500 may be provided with a corresponding number of compartments 530 and the medication for each patient may be kept in a separate drawer assigned to that patient. As a result, the nurse could load the medication for all eight patients into eight separate drawers at one time (e.g., at the start of a medication pass) and at one location (e.g., at a pyxis machine), thereby reducing the need to travel to obtain the medication during the nurse's shift.

[0064] As shown in Figures 7 and 8, the compartments 530 have projections 531 which are configured to slide in grooves 533 formed on the interior walls of the medical cart 500.

Although the compartments 530 in Figure 1 are shown as having a generally uniform height, this is not required. In some embodiments the compartments 530 may have different heights.

[0065] For example, as shown in Figure 7, four short compartments 530A-D can be removed, thereby exposing dividers 535 (which may be, for example, sheet metal). By removing the dividers 535 (e.g., by sliding them out of the medical cart 500), as shown in the left side of the medical cart 500 in Figure 7, a tall space 537 may be created. As a result, a tall compartment 530E, the height of which is substantially equal to height of the four short compartments 530A-D when installed in the medical cart 500, may be inserted into medication module 500 to substantially fill the space 537. Moreover, the tall compartment 530E will readily slide into the medical cart 500 by means of the projections 531 which are configured to slide into the grooves 533 previously occupied by the projections 531 of the upper short compartment 530A. Thus, different size compartments 530 can be accommodated based on the desired application.

[0066] The compartments 530 may be lockable by means of a keyless entry system (the details of which are later described with respect to Figures 22 and 23). Thus, the potential for unauthorized access to the compartments 530 while the nurse is caring for a particular patient is small.

[0067] The top bins 243 are provided to house items such as paperclips, pencils, etc. Similarly, the cup holders 344 are provided to secure a number of medicine cups used to pass out medications.

[0068] The removable side bins 520 can be provided to hold items, such as trash or medical equipment. The side bins 520 can be removably connected to the sides of the body 329 of the work platform 340 by conventional means, such as a hole and pin arrangement.

[0069] The work platform 340 may be raised and lowered by means of the support mechanism 320. This provides a sitting or standing user with easy access to the work surface 350 and its associated components (e.g., laptop platform 370, work surface 350, compartments 530, etc.). The support mechanism 320 allows the user to adjust the position of the work platform 340 to a comfortable position, regardless of whether the user is sitting or standing. The support mechanism 320 comprises two telescoping portions 322, 324 (shown more clearly in the embodiment shown in Figure 16) and height adjustment mechanism 400 (shown in Figures 9A and 9B). The height adjustment mechanism 400 enables a standing user or a sitting user to ergonomically raise and lower the work platform 340.

[0070] The height adjustment mechanism 400 includes an outer casing 410, a telescoping inner casing 420, and a driver 430. Preferably, two or more drawer slides 422 are provided between the inner casing 420 and the outer casing 410. Although two drawer slides 422 may be used (on opposite sides of the inner casing 420), it is preferable to use at least three drawer slides 422, to prevent (or at least greatly inhibit) a binding action from being applied to the height adjustment mechanism 400 by means of a cantilevered force being applied thereto.

[0071] The drawer slides 422 may be, for example, conventional drawer rails formed of stationary drawer rails 423 and corresponding rail runners 425. If the drawer slides 422 are conventional drawer rails, one side of the drawer slides 422 (e.g., the rail runners 425) may be fixed to outer sides of the inner casing 420 and the corresponding side of the drawer slides 422 (e.g., the stationary drawer rails 423) may be fixed to inner sides the outer casing 420. Further, the stationary drawer rails 423 may be provided with ball bearings to facilitate movement of the rail runner 425. An upper end of one side of the inner casing 420 is provided with an engagement mechanism 426. As shown, the engagement mechanism may be in the form of a window in the side of the casing 420.

[0072] The driver 430 includes a gas driven piston 432 which, in turn, includes a body portion 436 and a telescoping strut 434. The driver 430 is controlled by an actuator 440 to which is connected by a connector 442.

[0073] As shown in Figure 10A, a base 411 of the outer casing 410 is affixed to the base 310 of the medical cart 500 by a plurality of bolts through the base 411. A bolt 413 passes through a hole 437 in a connection portion 439 of the body portion 436 of the piston 432, thereby immobilizing both the outer casing 410 and the piston 432. In addition, as shown in Figure 10B, the inner casing 420 and the telescoping strut 434 are affixed to work platform 340 by an upper bolt 415 which passes through the inner casing 420 and through a hole 459 in a connection portion 460 of the telescoping strut 434. As a result, when the work platform 340 is raised or lowered, the strut 434 and the inner casing 420 are correspondingly raised or lowered.

[0074] As shown in Figure 10B, the actuator 440 may be provided in a front portion of the medical cart 500. Moreover, a button 444 of the actuator 440 may be provided in the handle 360 of the medical cart 500, as shown in Figure 1. To lower the work platform 340, the button 444 is pushed as a user pushes down on work platform 340 thereby causing the gas driven piston 432 to expel air. As a result, the telescoping strut 434 is withdrawn vertically

into the body portion 436 of the piston 432. As the telescoping strut 434 moves downward into the body portion 436, the work platform 340 which is affixed to the telescoping strut 434 also moves downward. In turn, the work platform 340 forces the connection portion 460 and the inner casing 420 to move downward. If the button 444 is released while the work platform 340 is being lowered, the work platform 340 will be releaseably locked at the height at which the button 444 is released. As a result, the work platform 340 can be releaseably locked at any position between a lowest position (at which the telescoping strut 434 is maximally provided in the body portion 436 of the piston 432) and a highest position (at which the inner casing 420 is driven upward to a maximum distance by the telescoping strut 434 of the piston 432).

[0075] By way of contrast, to raise the work platform 340, a user merely needs to push button 444 and lift upward on the work platform 340. As the work platform 340 is light in weight, it will readily move upward. Moreover, in the process, the gas driven piston 432 will intake air, thereby enabling the work platform 340 to remain at the raised level, i.e., when the platform 340 is raised gas will be sucked into the piston 340 and will not be readily expellable until the button 444 is depressed. In other words, similar to the process of lowering the work platform 340, when the work platform 340 is raised it may be releaseably locked at any position between the lowest position and the height position by releasing the button 444. As a result, each component of the work platform 340 (including the bi-directional laptop platform 370 and the compartments 530) is ergonomically available to a user when sitting or standing.

[0076] In addition, as shown in Figures 12 and 13, the medical cart can include a power cord passage 327 that enables a power cord 902 of a laptop computer 900 (or other device) on the laptop platform 370 to be electrically connected to an electrical receptacle 904 provided in the base 310. The electrical receptacle 904 can be connected, for example to a wall outlet via a retractable cord 906, as later described. Preferably, the passage 327 includes an access hole 325 in the work platform 340 and extends through the telescoping portions 322, 324. The passage 327 terminates in a well 960 in the base 310 where the electrical connection can occur. This permits the point of connection to the electrical receptacle 904 to be enclosed.

[0077] As shown in Figure 13, the well 960 in the base 310 houses the electrical receptacle 904, a retractable cord 906, and a hatch 908 that provides access to the well 960 so that power cords 387, 902 can be plugged into the electrical receptacle 904. The retractable cord 906 can be plugged into an external wall outlet to recharge the battery internal to the laptop

computer 900 and/or a battery-powered solenoid 240 in the keyless entry system (later described in detail). The hatch 908 works in conjunction with a cover plate 910 to enclose the base 310 including the well 960, thereby encapsulating the components provided in the base 310 and shielding them from the environment.

[0078] The base 310, which is moveable by means of rolling members 120 (e.g., casters), is ergonomically shaped to provide stability. The base 310 is designed to provide stability by having the rolling members 120 at corners which are outside of the footprint of the work platform 340. Moreover, the rolling members 120 are spaced-apart to such a degree that two rolling members 123 of a medication module 100 can be located between two rolling members 121 of the base 310, thereby enabling the medical cart 500 and the medication module 100 to nest together. Further, when the medical cart 500 is nested with a medication module 100, it may be releaseably connected to the medication module 100 by means of a second locking mechanism 190 provided on an underside of the base 310 (shown in Figures 1 and 15), also as later described in detail.

[0079] Another embodiment of a medical cart 300 is shown in Figure 16. In this embodiment, the removable side bins 520 of the previous cart 500 have been removed to facilitate joining the medical cart 300 with a medication module 100. The medical cart 300, like the medical cart 500 shown in Figure 1, also includes a second locking mechanism 190 which may be used to connect the medical cart 300 to a medication module 100. In addition, the cart 300 contains fewer compartments 330 which may, like the compartments 530 of the medical cart 500 shown in Figure 1, be lockable by means of a keyless entry system or by a conventional key lock.

[0080] One embodiment of a medication module 100, which may be referred to as a cart, is shown in Figures 17-23. As shown in Figure 17, the medication module 100 includes a component body 111 having a plurality of lockable compartments 130 and which is supported by a base 110. The medication module also may include a refuse container 140, a depression work surface 150, a retractable power cord 144 (shown best in Figures 18 and 21B) which can be used to recharge a battery 241 of a keyless entry system 600 by means of a power cord 233 (as later described in detail), a front handle 160, and a side handle 162. The two handles 160, 162 are provided so that the medication module can be pushed by a user standing in front of the compartments 130 or in front of the sidewall 112.

[0081] The component body 111 includes two side walls 112 and a back wall 114. The walls 112, 114 support a plurality of compartments 130 which, for example, may be in the form of drawers. Although the compartments 130 are shown as having a generally uniform height, this is not required. Moreover, in some embodiments the compartments 130 may have different heights. As a result, a plurality of short compartments 130 may be replaced by a tall compartment 130 in the manner previously described with respect to the first medical cart 500 embodiment.

[0082] It is preferable to provide the user with the ability to lock the compartments 130, of the medication module 100. To reduce the likelihood of losing a key, to reduce the likelihood of having a key getting stuck (or worse broken) in a lock, and to eliminate the need for a separate lock for each compartment 130, the compartments may be lockable by a keyless entry system 600, as hereafter described with respect to Figures 22 and 23.

[0083] The keyless entry system 600 includes a solenoid 240 (powered by a battery 241 which is electrically connected, by means of the power cord 233, to the retractable power cord 144), a printed circuit board ("PCB") 245, a piston 222, a spring-biased hinge 210 (which has an active side 211 and a stationary side 213), a keypad 238, and an actuating lever 224 which is connected to the piston 222 at a connection point 231 and which pivots around an axis of rotation defined by a pin 230.

[0084] The hinge 210 can be, for example, a hinge conventionally known as a piano hinge. In a locked orientation, the active side 211 of the hinge 210 is provided in an engagement position 215 in which the active side 211 is positioned to engage a notch 132 formed on a compartment 130 (i.e., each compartment 130 has a similar notch 132), if a user attempts to withdraw the compartment 130. In other words, as a result of the engagement between the active side 211 of the spring 210 and the notches 132 of the compartments 130, the compartments 130 can not be readily withdrawn out of the medication module 100.

[0085] To unlock the compartments 130, a user first enters a security code using buttons of the keypad 238 (to verify access to the medication module 100) and may, if required, then enter an unlock code on the keypad 238. In response, the PCB 245 sends an unlock signal to the solenoid 240. When the unlock signal is received by the PCB 245, the solenoid 240 withdraws the piston 222, thereby causing the end of actuating lever 224 in contact with the active side 211 of the spring 210 to swing outward on the pin 230. As a result, the actuating lever 224 causes the active side 211 of the spring 210 to swing out of the engagement

position 215 and into a disengagement position 217. In other words, the active side 211 swings toward the stationary side 213 of the spring 210 so that the two sides 211, 213 rest against each other. When the sides 211, 213 of the spring 210 rest against each other, the notches 132 of the compartments 130 will no longer be inhibited by the active side 211 of the spring 210. As a result, the compartments 130 may be readily removed from the medication module 100.

[0086] The compartments 130 can be relocked by pressing a "lock" button (not labeled) on the keypad 238 or by entering a lock code on the keypad 238; in either case, the PCB 245 will send a lock signal to the solenoid 240 instructing it to outwardly push the piston 222, thereby causing the end of the actuating lever 224 in contact with the active side 211 of the spring 210 to swing inward on the pin 230. As a result, the active side 211 of the spring 210 will swing back into the engagement position 215 by means of the spring-biased nature of the spring 210. In addition, and as a safety means, a timer may be provided in the keypad 238, PCB 245, or in the solenoid 240 which will, when a timer count is satisfied, automatically instruct the piston 222 to be outwardly pushed, thereby causing the active side 211 of the spring 210 to retract into the engagement position 215.

[0087] If a compartment 130 is removed when either a lock signal is sent to the solenoid 240 or when a timer count is satisfied (and the active side 211 of the spring 210 is provided in the engagement position 215), the compartment 130 may be inserted into the medication module without entering an unlock code. Specifically, the notches 132 of the compartments 130 have sloped faces 133 thereon which, when the compartment 130 is pushed into the medication module 100, will abut the active side 211 of the spring 210. By continuing to push the compartment 130, the sloped face 133 will cause the active side 211 of the spring 210 to collapse into the disengagement position 217, i.e., the spring-bias of the spring 210 will be overcome. After the sloped face 133 passes the active side of the spring 210, the active side 211 will snap back into the engagement position 215 (by means of the spring-bias), thereby locking the compartment 130 in the medication module 100.

[0088] An additional safety (and access) measure may be provided to address a situation in which the keypad 238 fails or the battery powered solenoid 240 loses power. Specifically, the compartments 130 may be unlocked manually by a hard (back-up) lock 220, as shown in Figures 17 and 23. By means of the hard lock 220, a key can be used to manually rotate the actuating lever 224, thereby pushing the active side 211 of the spring 210 or enabling it to

swing outward under the force of the spring bias. In other words, the key can be used to move the active side 211 manually out of the engagement position 215 or to allow the active side 211 to swing (under the spring-biased force) into the engagement position 215.

[0089] Although the keyless entry system 600 has been described with respect to the medication module 100, the same system 600 can be applied to the compartments 330, 530 of the medical carts 300, 500, respectively.

[0090] As a result of the ability to lock the compartments 130, 330, 530, a nurse can use a medication module 100 and/or medical cart 300, 500 to deliver medication to various patients, without worrying about unauthorized access to the compartments 130, 330, 530 while attending to a particular patient. Moreover, as a result of the keypad 238, a nurse does not have to worry about losing a key, except for the hard lock key which may be kept at a central location.

[0091] The base 110, which is supported by a plurality of rolling members 120 (e.g., casters), is designed to provide stability to the frame 111, similar to the base 310 of the medical cart 300, 500. However, the base 110 is also designed such that the two of the rolling members 121 on one side of the module 100 are spaced apart farther than the two rolling members 123 on the other side of the module 100. As a result, when two medication modules 100 (or a medication module 100 and a medical cart 300, 500) are brought together, the closer spaced rolling members 123 of one module 100 can fit between the farther spaced rolling members 121 of the other module 100 (or medical cart 300, 500), thereby enabling the modules 100 (or module 100 and medical cart 300, 500) to nest closer together to form a train 200.

[0092] As a result of the ability to nest the bases 110 of a plurality of consecutive medication modules 100 in a train 200 (as later described in detail), the sidewalls 112, 112 of adjacent modules 100 can be positioned in close proximity, thereby creating a small footprint for the train 200. Similarly, as a result of the ability to nest the base 110 of a medication module 100 and the base 310 of a medical carts 300, 500, the compartments of the medication module 100 can be in close proximity to the work platform 340 of the medical cart 300, 500, thereby providing a user with easy access thereto.

[0093] To releaseably link the nested medication modules 100 (or a medication module 100 and nested a medical cart 300, 500), the base 110 of the medication module 100 is provided with a connection mechanism 171. The connection mechanism 171 includes an actuator 180, a first locking mechanism 170, and a second locking mechanism 190, as best shown in

Figures 19 and 20. The actuator 180, which may be in the form of a foot pedal, includes a pivot rod 182. When the foot pedal 180 is depressed, the pivot rod 182 is configured to rotate within rings 192 from a resting position to an active position, thereby activating the first locking mechanism 170.

[0094] The first locking mechanism 170 includes beams 188, cover plates 186 having sloped surfaces 194, and catches 184 which comprise cavities 187. When the rod 182 of the actuator 180 rotates, it pulls the beams 188 toward the center of the base 110. In turn, the beams 188 cause the cover plates 186 to rotate toward the center of the base 110. As the cover plates 186 rotate, they expose the cavities 187 in the catches 184. Correspondingly, when the actuator 180 is released, the rod 182 rotates back to the resting position, thereby pushing the beams 188 away from the center of the base 110 and, in turn, rotating the cover plates 186 to enclose the cavities 187.

[0095] When the cavities 187 are closed, they are designed to releaseably contain posts 197 of a second locking mechanism 190 of another medication module 100 or of a medical cart 300, 500. In addition, although the posts 197 may be provided separately on the base 110, 310, of the medication module 100 and medical carts 300, 500, they are preferably integrally formed by means of a crossbar 196. Regardless of the design of the posts 197, they enable a medication module 100 to be joined to another medication module 100 to form a train 200, as shown in Figure 20.

[0096] A train 200 of medication modules 100A-100C can be formed by releaseably aligning the posts 197 of a second locking mechanism 190 of one medication module 100A with the cover plates 186 of a first locking mechanism 170 of an adjacent medication module 100B. By pushing the modules 100A, 100B toward each other, the posts 197 will slide along the sloped surfaces 194 of the cover plates 186, thereby causing the cover plates 186 to rotate. As the cover plates 186 rotate, the cavities 187 will be exposed and the posts 197 will slide into them. After the posts 197 slide into the cavities 187, the cover plates 186 will retract, thereby locking the posts 197 in the cavities. Of course, to add a third medication module 100C, the posts 197 of the second medication module 100B would be similarly inserted into the cavities 187 of the third medication module 100C.

[0097] As the medical carts 300, 500 also include second locking mechanisms 190, the medication module can be releaseably joined with the medical carts 300, 500. For example, as shown in Figures 21A and 21B, the medication module 100 can be releaseably joined with

the medical cart 300 shown in Figure 16. Of course, to release the medication module 100 from the medical carts 300, 500, a user (e.g., a nurse) would depress the foot pedal actuator 180 (shown in Figure 21A) to disengage the first locking mechanism 170 formed under the base 110 of the medication module 100 and the second locking mechanism 190 formed under the base 310 of the medical cart 300, 500.

[0098] As shown in Figure 24, a train 200 of medication modules 100 can be loaded with medication at a central location (e.g., pharmacy) 700; the number of medication modules 100 may depend on the number of medical carts 300, 500 that a hospital has on a particular floor on which the medication is to be delivered. A pharmacy technician can then drive the train 200 to a second location 800 at which the individual medication modules 100 can be separated from the train 200. In addition, the medication modules 100 may be joined (by means of the first connection mechanism 171 thereon) to a medical cart 300, 500 (by means of the second locking mechanism 190 thereon). One or more nurses 750 can then drive the separated medication modules 100 (with or without a medical cart 300, 500 affixed thereto) to respective third locations (not shown) at which the nurse may administer medication (contained in the compartments 130) to a distinct plurality of patients. When the nurse(s)'s rounds are complete, the empty medication modules 100 can be separated from attached medical carts 300, 500 (if any) and rejoined to form a train 200 of medication modules 100. The train 200 of medication modules 100 may then be returned to the central location 700 for refilling so that the method of medication transport may be repeated.

[0099] Similar to the aforementioned method, a modification may be made. Specifically, there may arise situations in which a nurse 750 does not want to push a combined medication module 100 and medical cart 300, 500 but wants to enjoy the functionality of the medical cart 300, 500. In these situations, the nurse 750 may unlock the compartments 130 of medication module 100 at the second location 800 and remove one or more compartments 130. The removed compartments 130 could then be exchanged with compartments 530 in the medical cart 500 or placed on the work platform of the medical cart 300 so that the medical cart 300, 500 then contains the medications which the nurse 750 needs to deliver.

[0100] If the compartments 130 of the medication module 100 are exchanged with the compartments 530 of the medical cart 500, the medication modules 100 containing the empty compartments 530 of the medical carts 500 may then be taken back to central location 700 for

refilling while the original medication is being taken by nurses to the patients, so that the method of medication transport can be repeated.

[0101] Although the aforementioned describes embodiments of the invention, the invention is not so restricted. It will be apparent to those skilled in the art that various modifications and variations can be made to the disclosed embodiments of the present invention without departing from the scope or spirit of the invention. Accordingly, these other medication modules, medical carts, height adjustment mechanisms, keyless entry systems, and methods of medication transport are fully within the scope of the claimed invention. Therefore, it should be understood that the apparatuses and methods described herein are illustrative only and are not limiting upon the scope of the invention, which is indicated by the following claims.

What is claimed is:

1. A cart comprising:

a work platform including a work surface and at least one compartment for containing an item within the compartment;

a base configured to be movable in at least a rearward direction; and

a height adjustment mechanism for adjusting a height of the work platform relative to the base, wherein the height adjustment mechanism is configured to releasably position the work platform at a plurality of heights, the height adjustment mechanism comprising:

a driver configured to releasably position the work platform; and

an actuator for controlling the driver,

wherein the base includes a portion projecting, relative to the height adjustment mechanism, in a forward direction that is substantially opposite to the rearward direction,

wherein the work platform includes a portion projecting, relative to the height adjustment mechanism, in the forward direction, wherein the compartment is disposed in the portion of the work platform projecting in the forward direction, and the compartment is configured to permit a user facing in the rearward direction to access the item within the compartment,

wherein the actuator is disposed above the compartment and on the portion of the work platform projecting in the forward direction.

2. The cart of claim 1, wherein the height adjustment mechanism comprises a first telescoping portion connected to the base, and a second telescoping portion connected to the work platform and configured to move relative to the first telescoping portion, and wherein the driver is configured to releasably position the second telescoping portion relative to the first telescoping portion.

3. The cart of claim 2, wherein the first telescoping portion is a stationary outer casing, and the second telescoping portion is a movable inner casing.

4. The cart of claim 1, wherein the work portion includes a handle on the portion of the work platform projecting in the forward direction, wherein the actuator is disposed on the handle.

5. The cart of claim 1, wherein the actuator is disposed at a spaced vertical distance above the compartment.

6. The cart of claim 1, wherein the work platform further comprises a movable platform configured to move in at least one of the forward direction and the rearward direction.

7. The cart of claim 1, wherein the work surface is configured to move in at least one of a leftward and rightward direction along an arcuate path that faces the forward direction.

8. The cart of claim 1, wherein the driver includes a piston that, in response to the user's actuation of the actuator, permits gas to flow out of the piston during lowering of the height of the work platform, and that, in response to the user's actuation of the actuator, permits gas to flow into the piston during increasing of the height of the work platform.

9. A cart comprising:

a work platform including a movable platform, a work surface movable relative to the movable platform, and at least one compartment for containing an item;

a base configured to be movable in at least a rearward direction; and

a height adjustment mechanism for adjusting a height of the work platform relative to the base,

wherein the base includes a portion projecting, relative to the height adjustment mechanism, in a forward direction that is substantially opposite to the rearward direction,

wherein the work platform includes a portion projecting, relative to the height adjustment mechanism, in the forward direction, the at least one compartment is disposed in the portion of the work platform projecting in the forward direction, and the at least one compartment is configured to permit a user facing in the rearward direction to access the item within the at least one compartment,

wherein the movable platform can be moved in at least one of the forward and rearward directions,

wherein the work surface can be moved in at least one of a leftward and rightward direction relative to the movable platform, and

wherein the work surface is configured to move in the leftward or rightward direction through a slot in a side of the portion of the work platform projecting in the forward direction.

10. The cart of claim 9, wherein the work surface is configured to move in the at least one of the leftward and rightward direction along an arcuate path that faces the forward direction.

11. The cart of claim 9, wherein the work surface is configured to move in both a leftward direction and a rightward direction along an arcuate path that faces the forward direction.

12. The cart of claim 9, wherein work platform is configured such that the work surface can be disposed below the movable platform.

13. The cart of claim 9, wherein work platform is configured such that the movable platform can be moved in the at least one of the forward and rearward direction without moving the work surface.

14. The cart of claim 9, wherein the at least one compartment comprises a plurality of compartments.

15. The cart of claim 9, wherein the movable platform is a laptop platform.

16. A cart comprising:

a work platform including a movable platform, a work surface movable relative to the movable platform, and at least one compartment for containing an item;

a base configured to be movable in at least a rearward direction; and

a height adjustment mechanism for adjusting a height of the work platform relative to the base,

wherein the base includes a portion projecting, relative to the height adjustment mechanism, in a forward direction that is substantially opposite to the rearward direction,

wherein the work platform includes a portion projecting, relative to the height adjustment mechanism, in the forward direction, wherein the at least one compartment is disposed in the portion of the work platform projecting in the forward direction, and the at least one compartment is configured to permit a user facing in the rearward direction to access the item within the at least one compartment,

wherein the movable platform can be moved in at least one of the forward and rearward directions, and

wherein the work surface can be moved in at least one of a leftward and rightward direction relative to the movable platform, and

wherein the work platform includes a secondary work surface, and the work platform is configured such that both the secondary work surface and the movable platform are exposed when the movable platform moves in the at least one of the forward or rearward direction.

17. The cart of claim 16, wherein the work surface is configured to move in the at least one of the leftward and rightward direction along an arcuate path that faces the forward direction.

18. The cart of claim 16, wherein the work surface is configured to move in both the leftward direction and the rightward direction.

19. The cart of claim 16, wherein work platform is configured such that the work surface can be disposed below the movable platform.

20. The cart of claim 16, wherein work platform is configured such that the movable platform can be moved in the at least one of the forward and rearward direction without moving the work surface.

21. The cart of claim 16, wherein work platform is configured such that the secondary work surface can be positioned in vertical alignment with the movable platform.

22. The cart of claim 16, wherein work platform is configured such that the secondary work surface can be disposed beneath the movable platform.

23. The cart of claim 16, wherein the at least one compartment comprises a plurality of compartments.

24. The cart of claim 16, wherein the movable platform is a laptop platform.

ABSTRACT

A medical cart is described and includes a work platform having a work surface and at least one compartment, a base, and a height adjustment mechanism for adjusting the height of the work platform relative to the base. A medication module is described and includes a plurality of compartments. The medical cart can be joined with a medication module. In addition, a plurality of medication modules can joined to form a train. The medical cart and medication module can be used collectively and individually in a variety of methods for transferring medicine.

Fig. 1

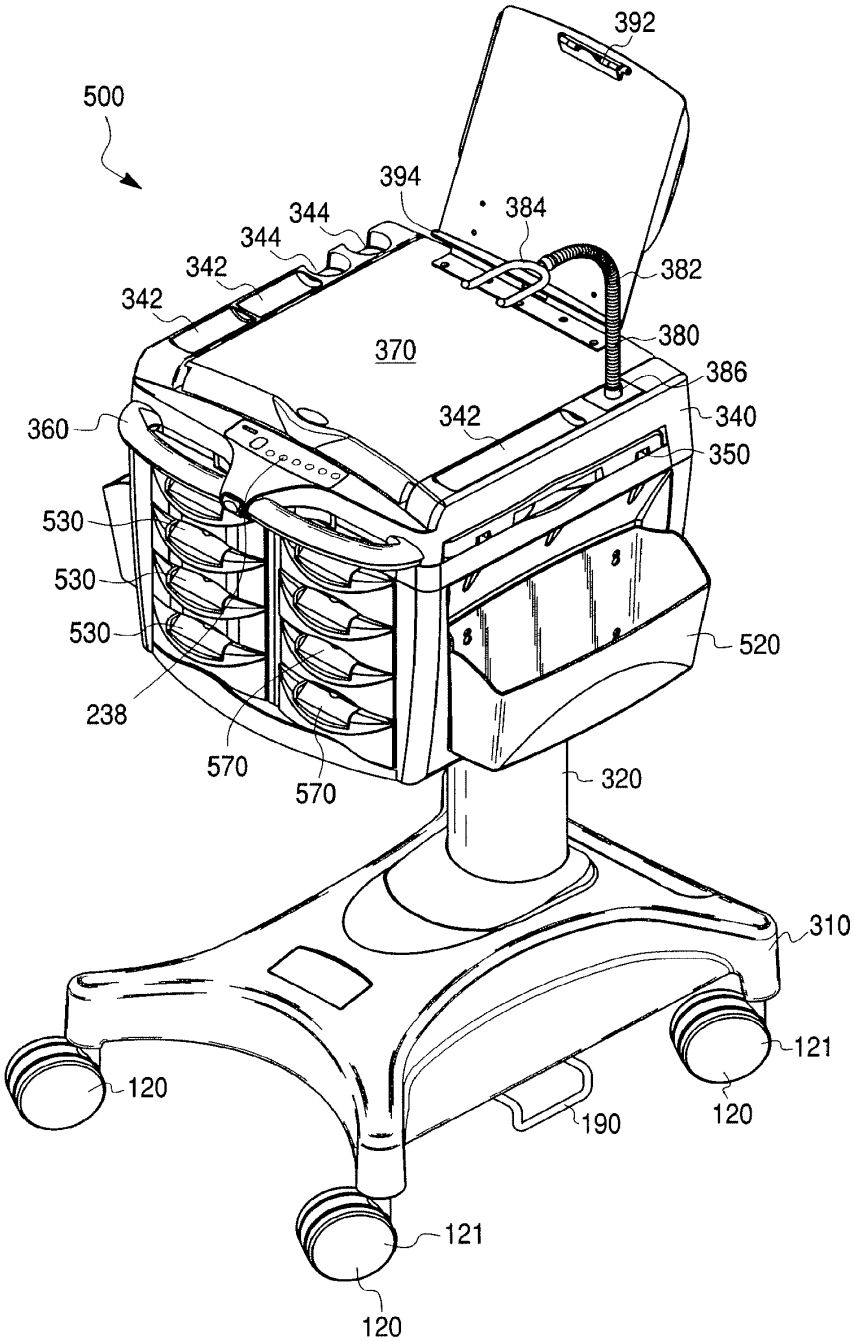
392
500
394
384
344
344
342
342
382
380
370
386
340
360
342
350
530
530
530
520
238
570
570
320
310
121
120
120
190
121
120

Fig. 2A

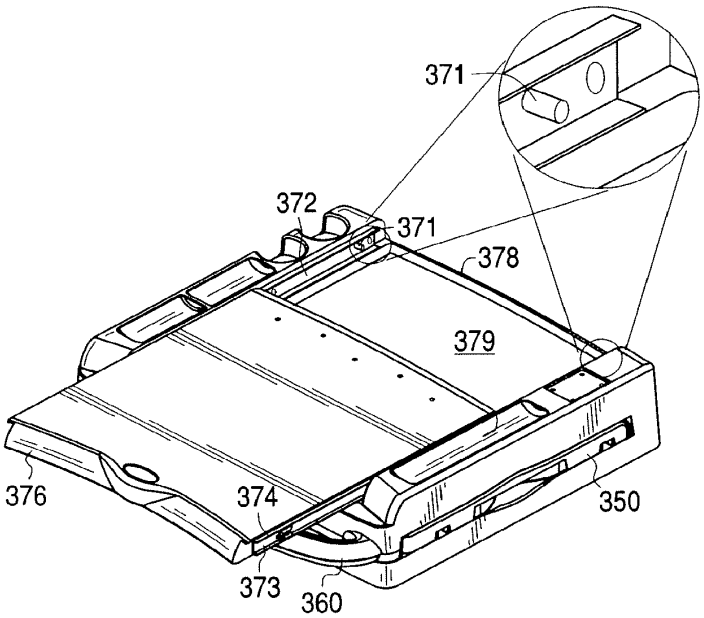
371
372
371
378
379
376
374
350
373
360

Fig. 2B

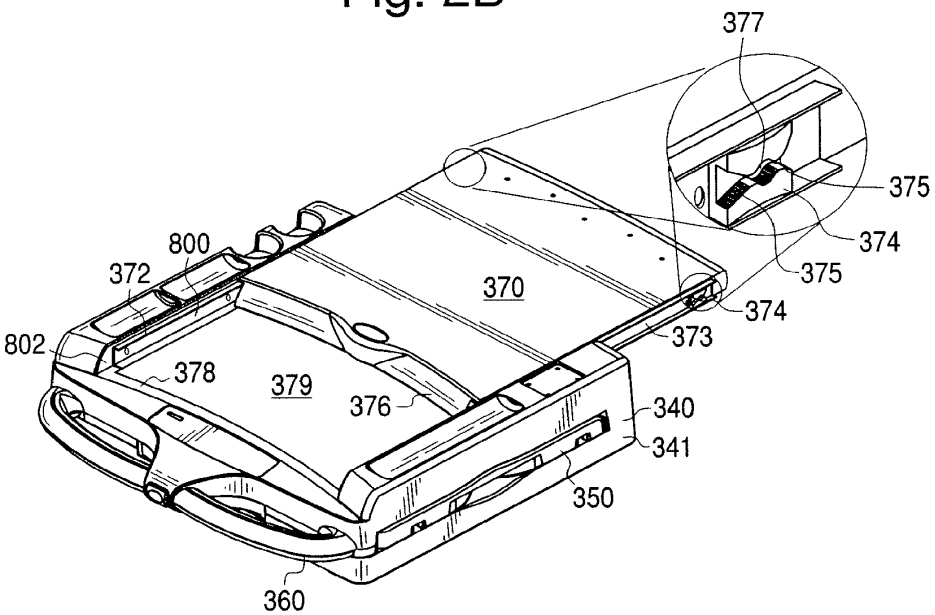
377
375
374
375
800
372
370
374
373
802
378
379
376
340
341
350
360

Fig. 3A

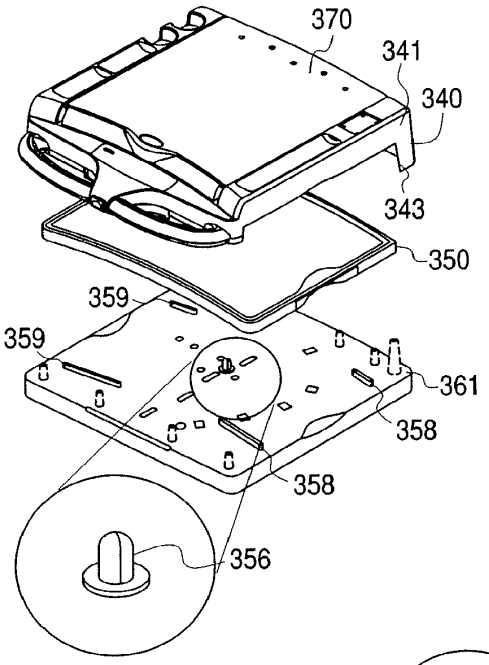

Fig. 3B

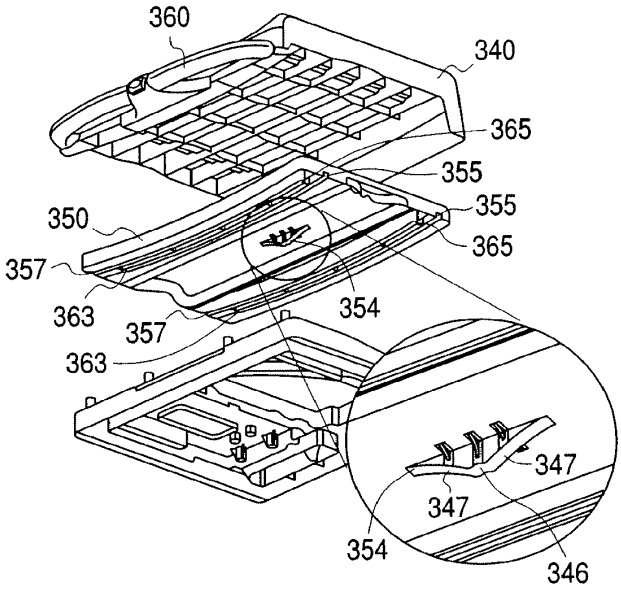

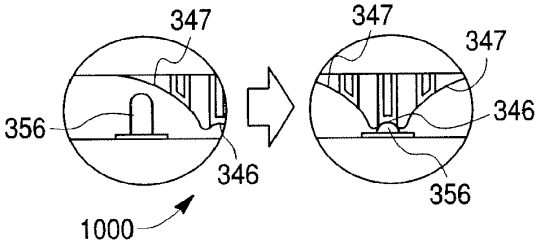

Fig. 3C

Fig. 4A

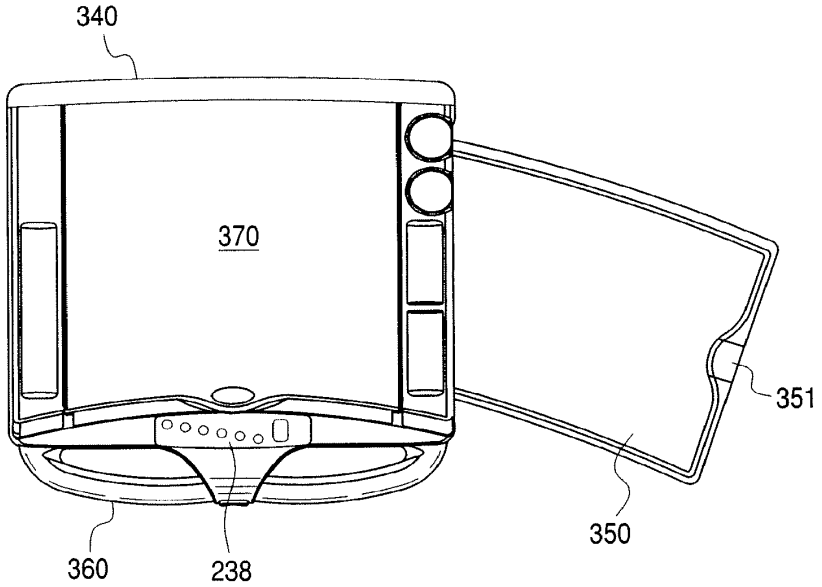

Fig. 4B

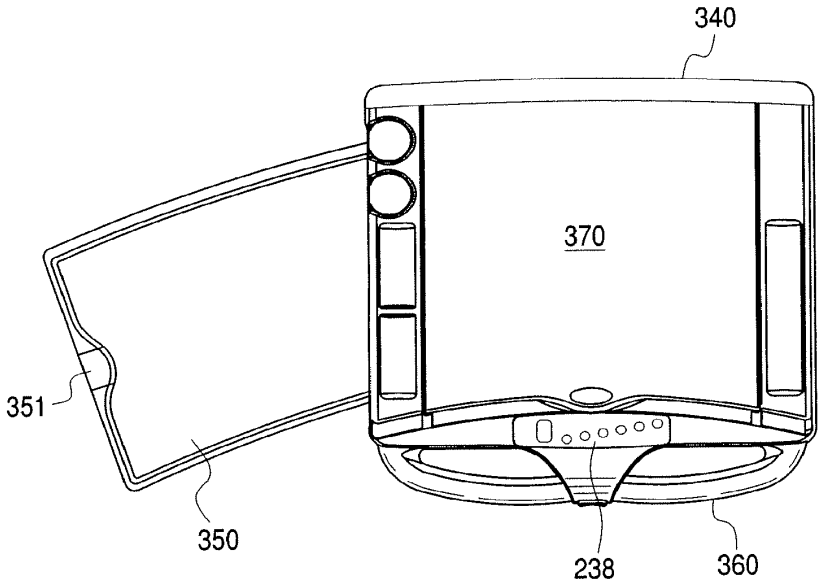

Fig. 5A

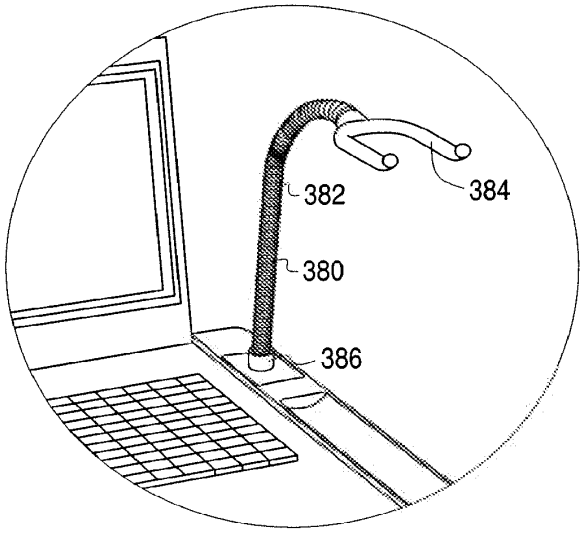

Fig. 5B

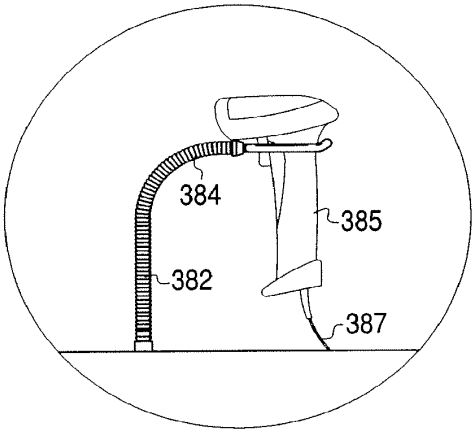

Fig. 5C

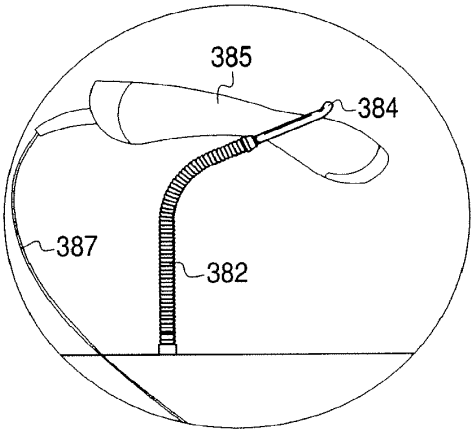

Fig. 6A

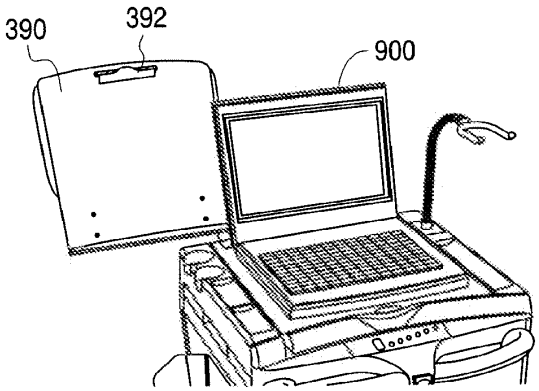

Fig. 6B

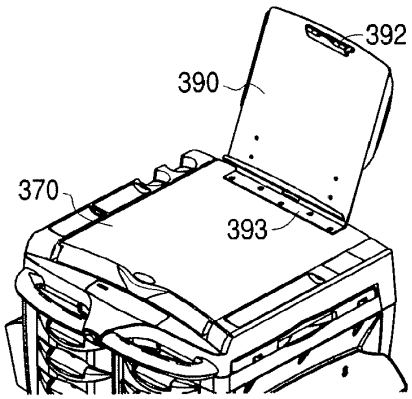

Fig. 6C

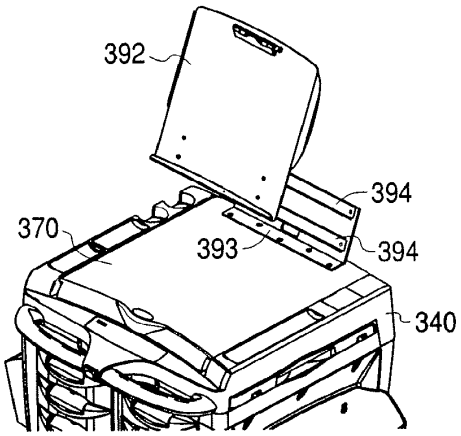

Fig. 7

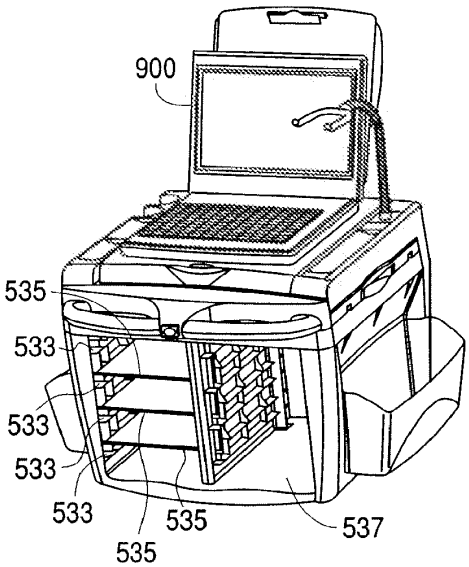
900
535
533
533
533
533
535
535
537

Fig. 8

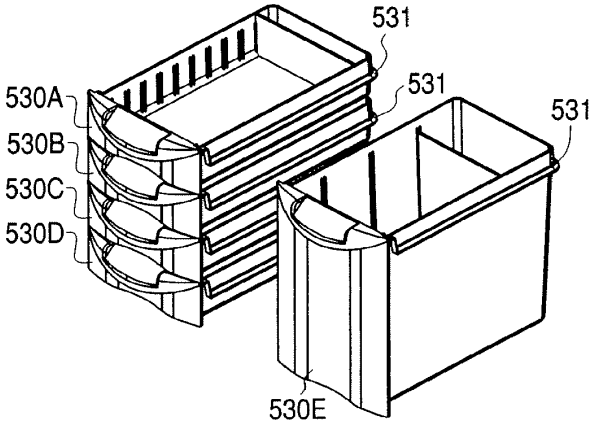
531
531
531
530A
530B
530C
530D
530E

Fig. 9A

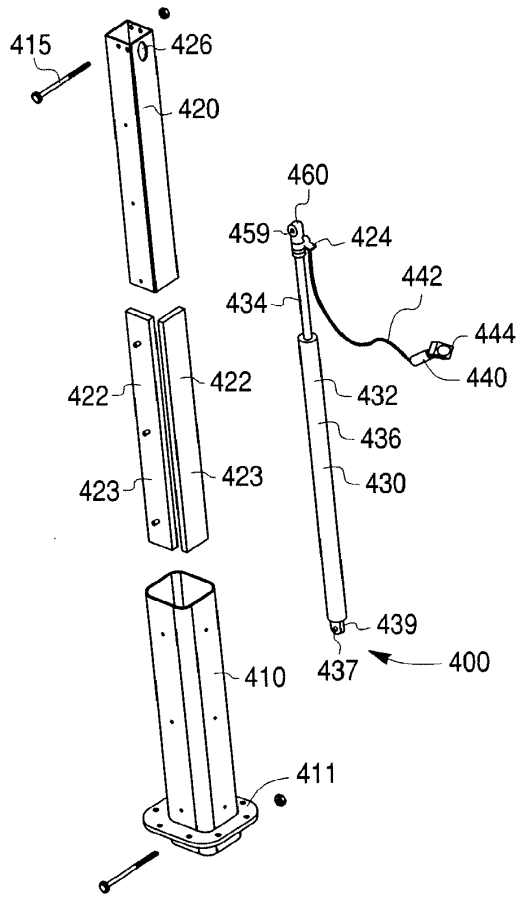
415
426
420
460
459
424
442
434
444
440
422
422
432
436
423
423
430
439
437
400
410
411

Fig. 9B

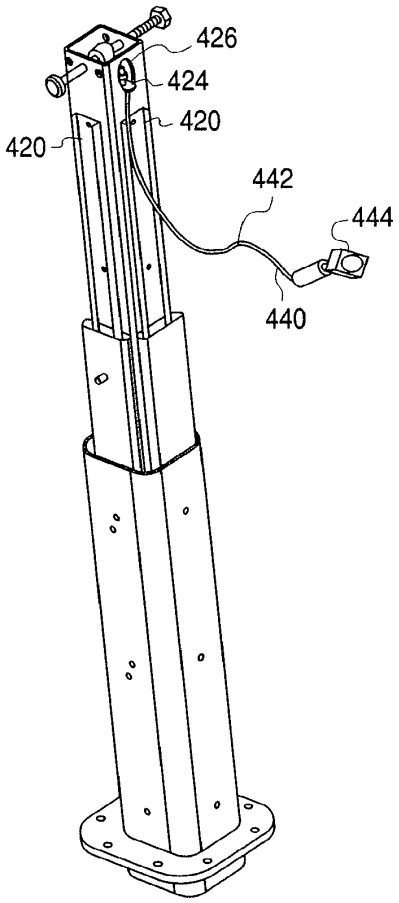
426
424
420
420
442
444
440

Fig. 10A

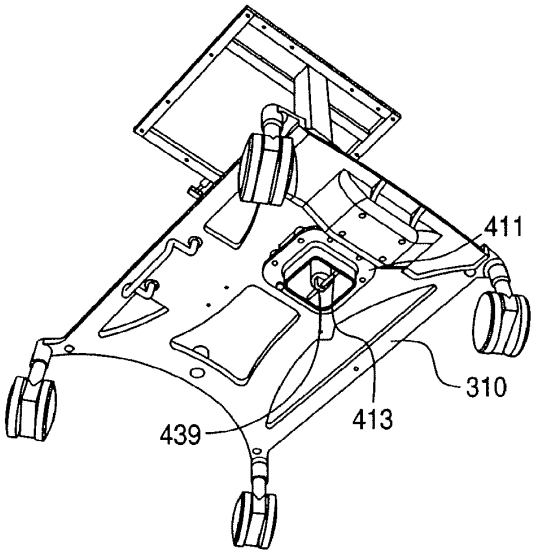

Fig. 10B

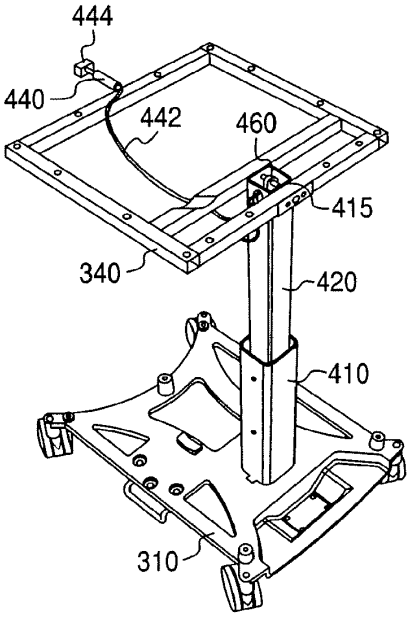

Fig. 12

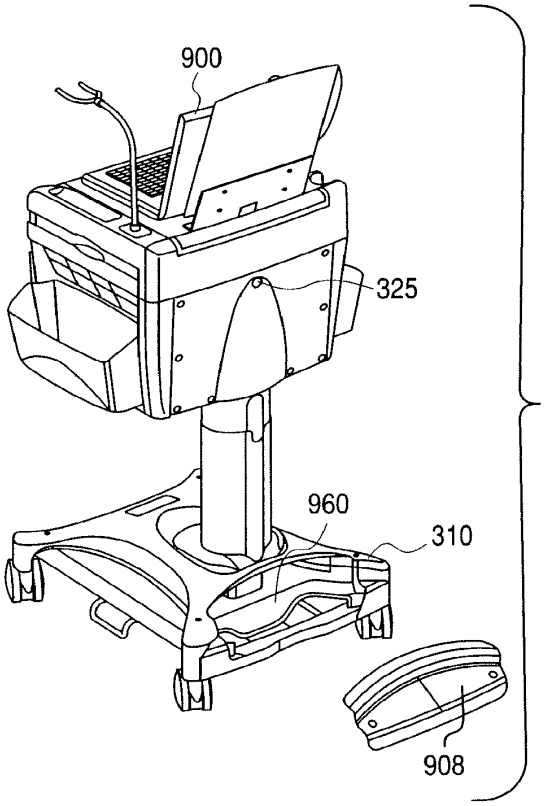

Fig. 11

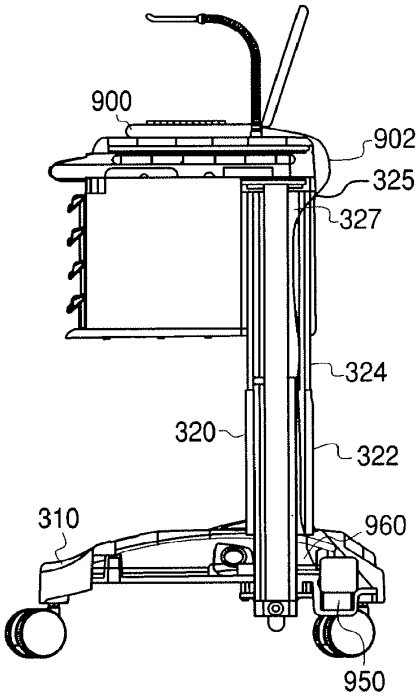

Fig. 13

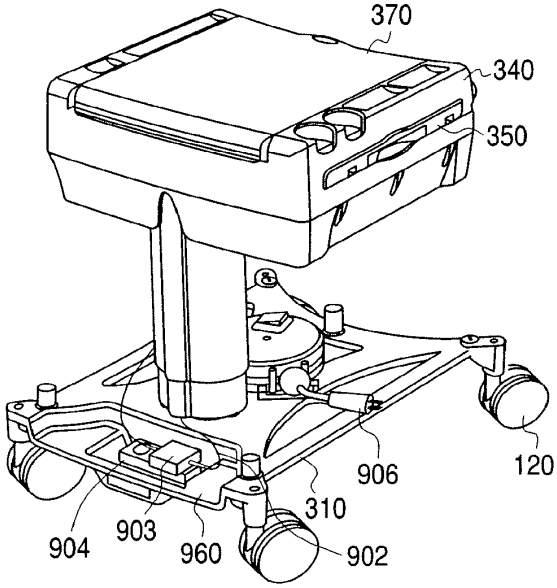

Fig. 14

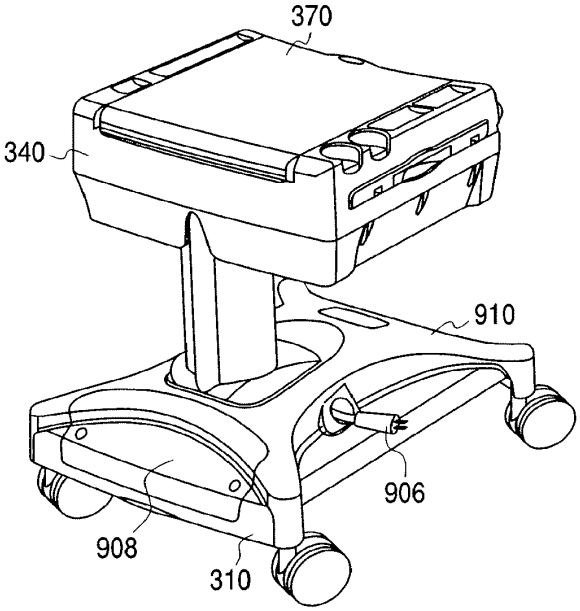

Fig. 15

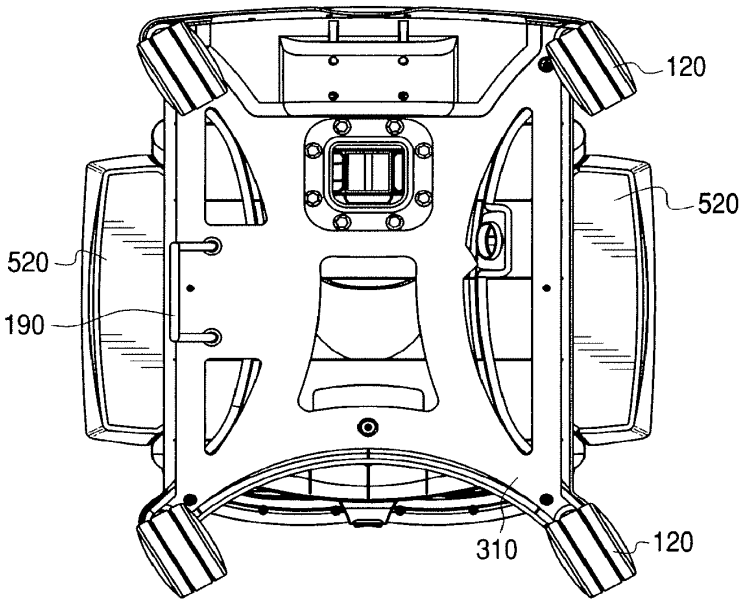

Fig. 16

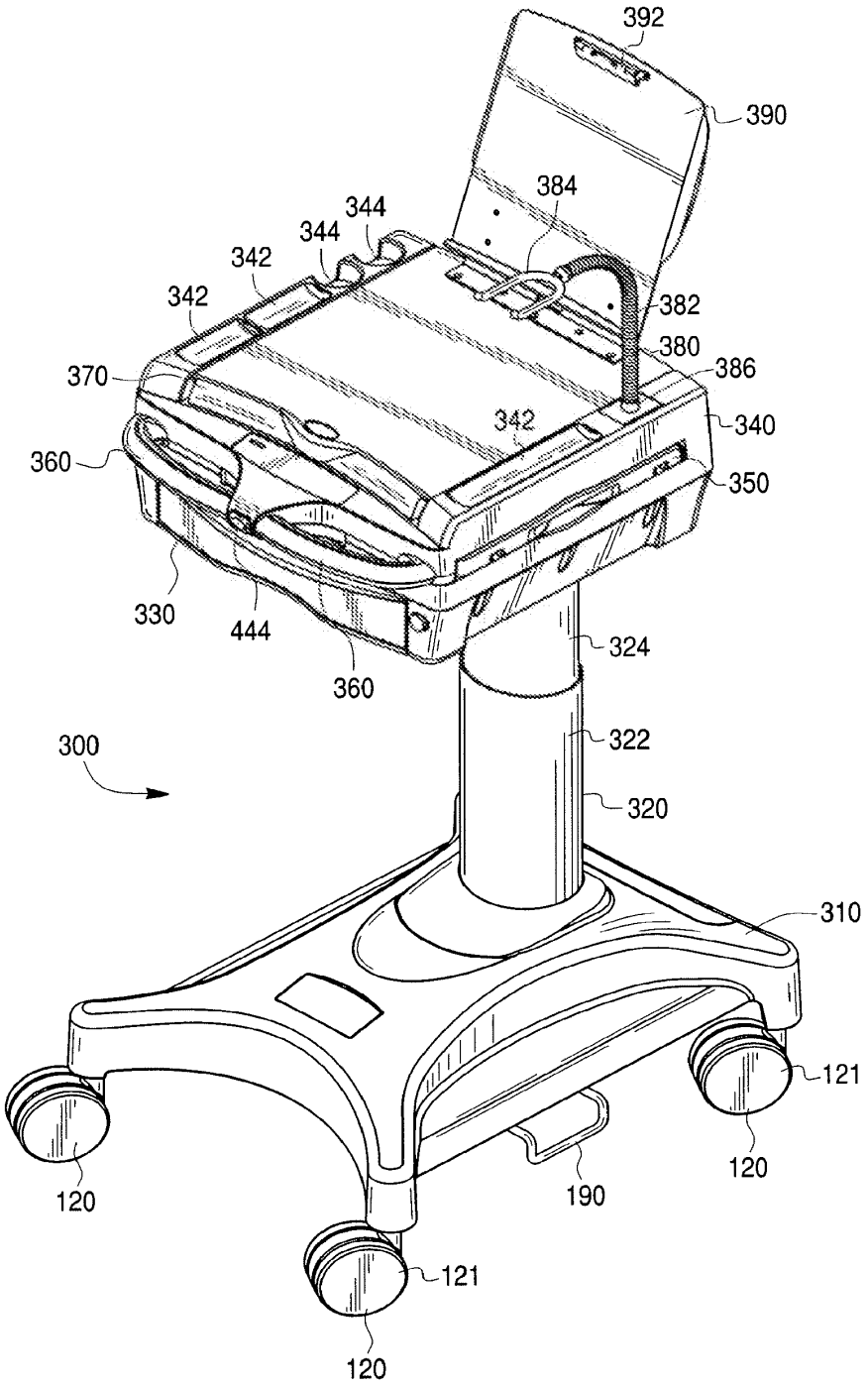
392
390
384
344
344
342
342
382
380
386
370
342
340
360
350
330
444
360
324
322
300
320
310
121
120
120
190
121
120

Fig. 17

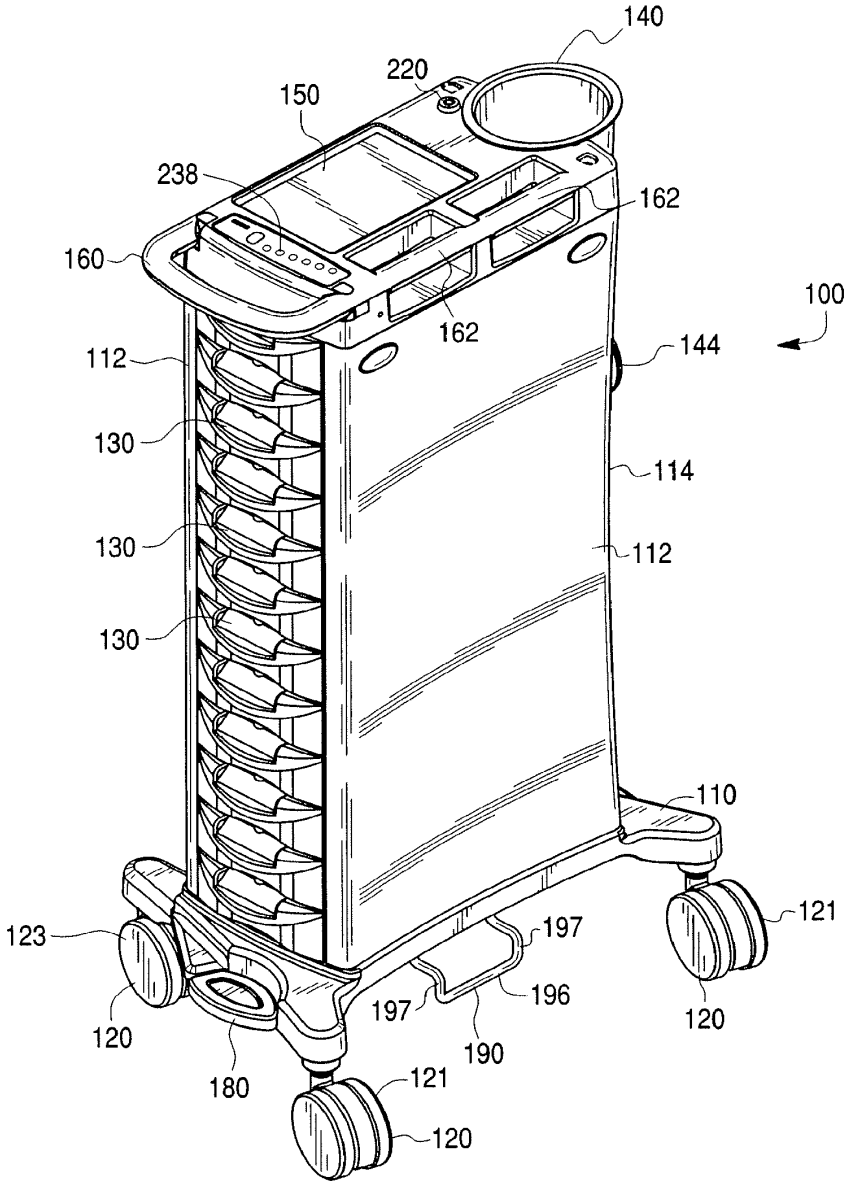
140
220
150
238
162
160
100
162
144
112
130
114
130
112
130
110
123
197
121
197
196
120
120
190
180
121
120

Fig. 18

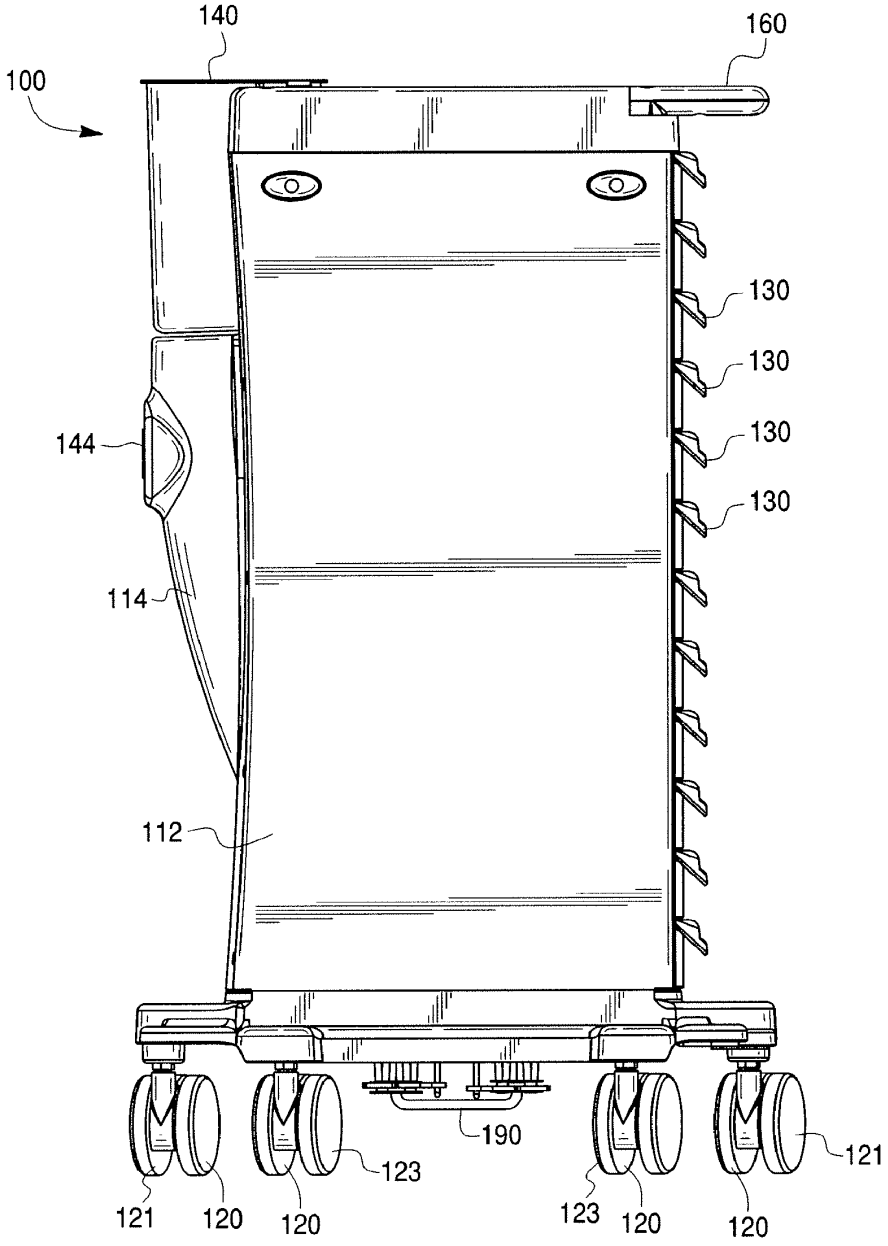
140
160
100
130
130
130
130
144
114
112
190
123
121
121
120
120
123
120
120

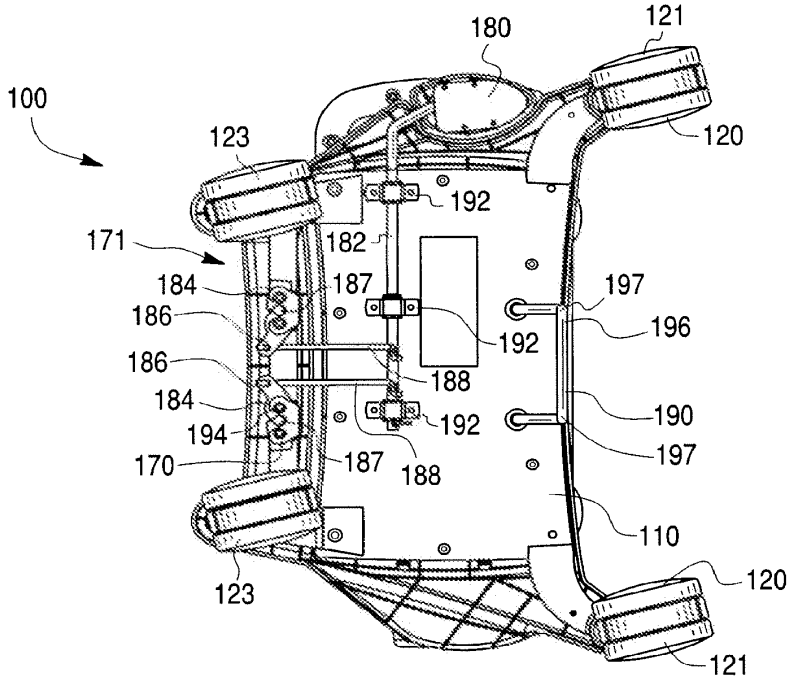
100
180
121
120
123
192
171
182
184
187
197
186
192
196
186
188
184
192
190
194
197
170
187
188
110
123
120
121

Fig. 19

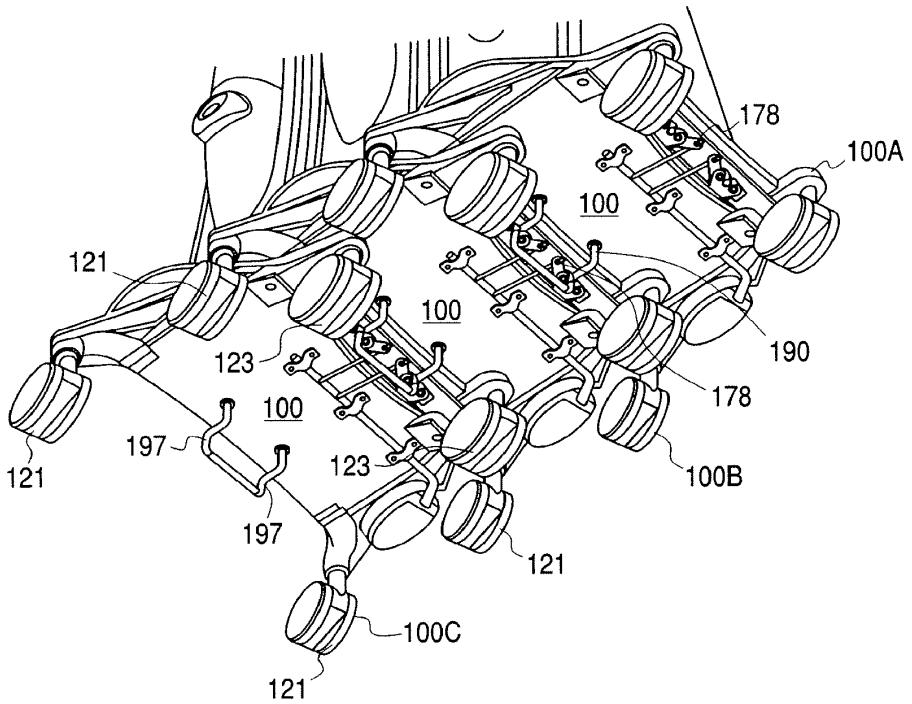
178
100A
100
121
100
190
123
178
100
197
123
100B
121
197
121
100C
121

Fig. 20

Fig. 21A

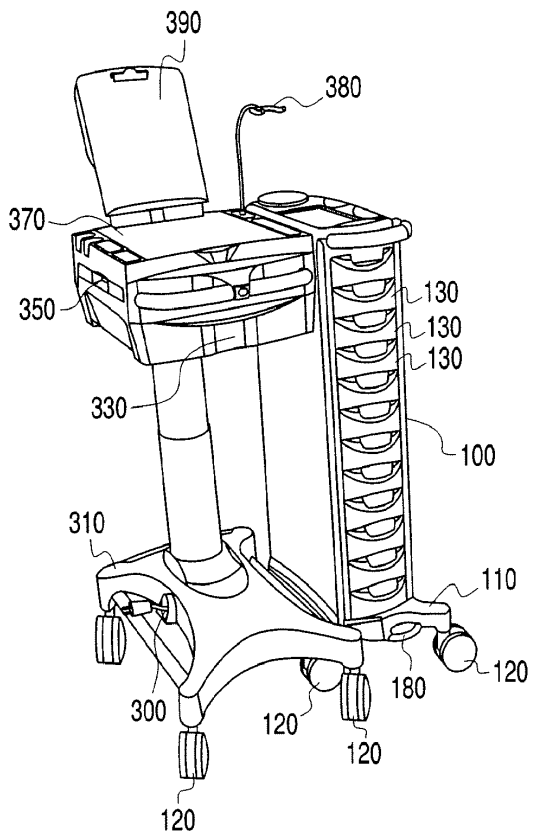

Fig. 21B

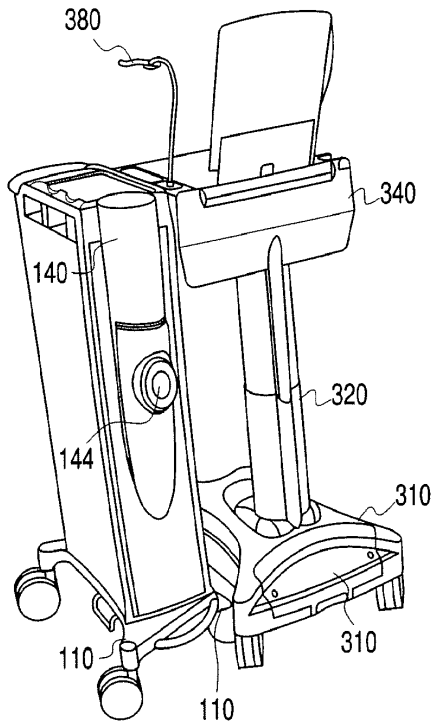

Fig. 22

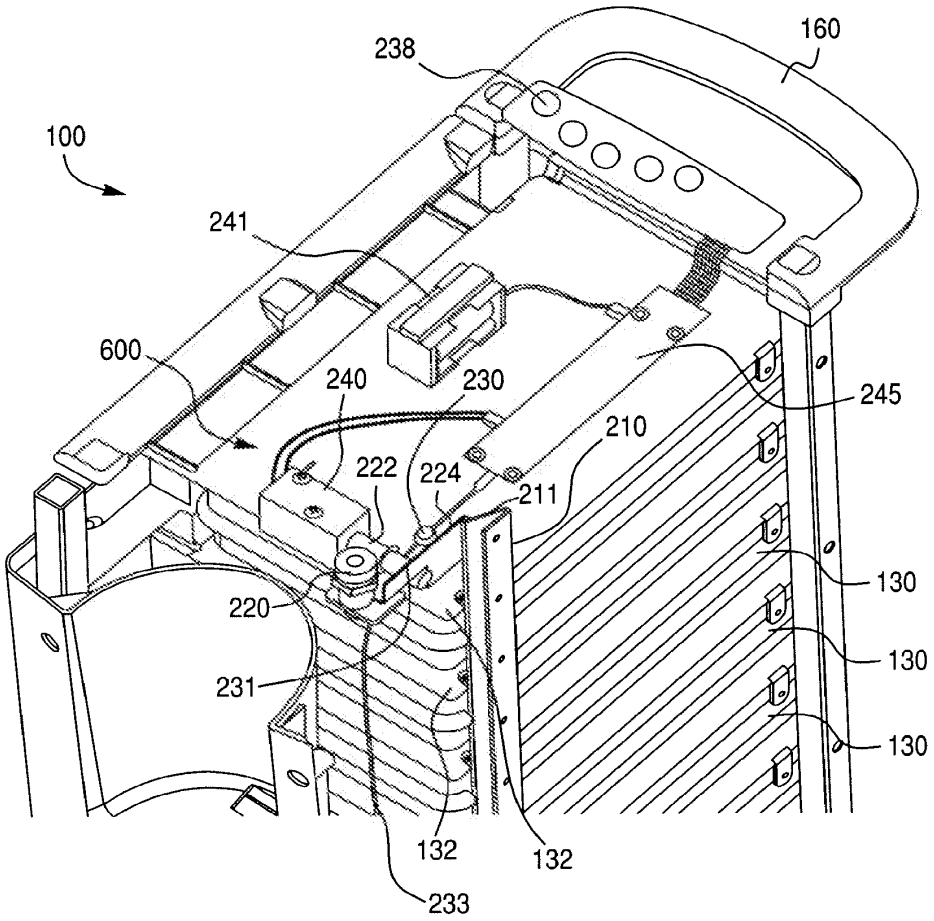
238
160
100
241
600
240
230
245
210
222
224
211
130
220
130
231
130
132
132
233

Fig. 23A

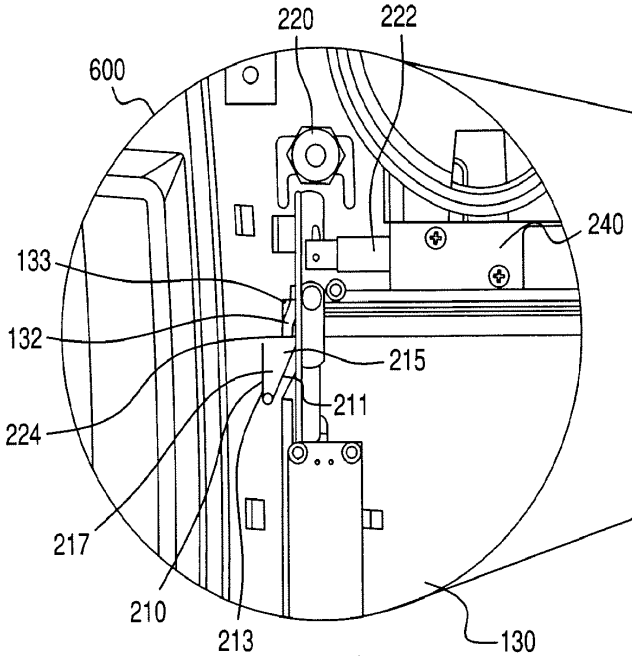

Fig. 23

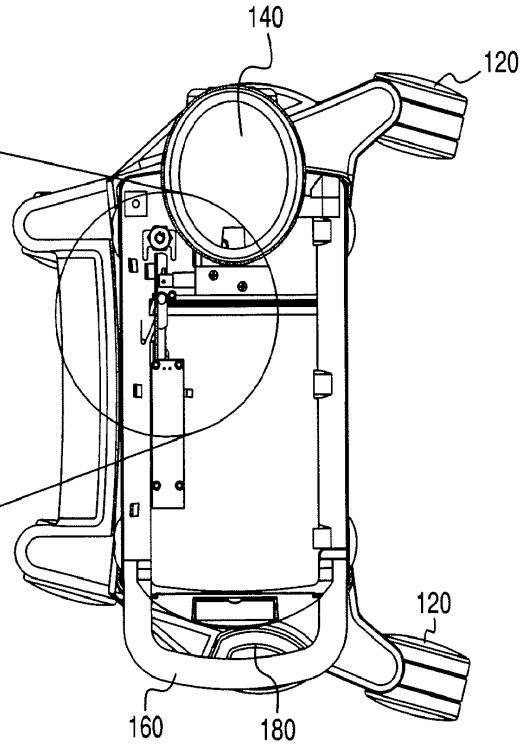

Fig. 24

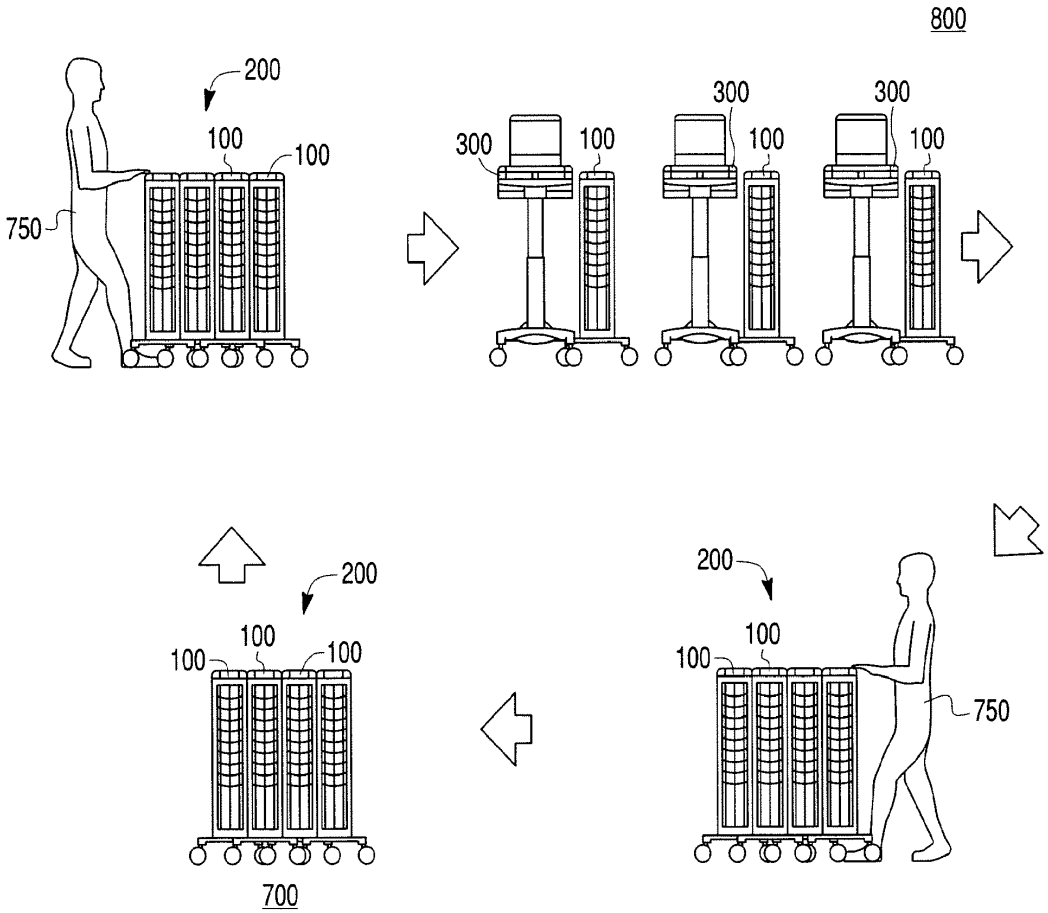
800
200
100
100
750
300
100
300
100
300
100
200
100
100
100
750
200
100
100
100
700

OIPE JC09
AUG 1 6 2004
PATENT & TRADEMARK OFFICE

Atty. Dkt. No. 086554-1056

DECLARATION AND POWER OF ATTORNEY

As a below named inventor, I HEREBY DECLARE:

THAT my residence, post office address, and citizenship are as stated below next to my name;

THAT I believe I am the original, first, and sole inventor (if only one inventor is named below) or an original, first, and joint inventor (if plural inventors are named below or in an attached Declaration) of the subject matter which is claimed and for which a patent is sought on the invention entitled

MEDICAL CART, MEDICATION MODULE, HEIGHT ADJUSTMENT MECHANISM, AND METHOD OF MEDICATION TRANSPORT

(Attorney Docket No. 086554-1056)

the specification of which (check one)

___ is attached hereto.

_X_ was filed on _02/23/2004_ as United States Application Number or PCT International Application Number _10/783,030_ and was amended on _____ (if applicable).

THAT I do not know and do not believe that the same invention was ever known or used by others in the United States of America, or was patented or described in any printed publication in any country, before I (we) invented it;

THAT I do not know and do not believe that the same invention was patented or described in any printed publication in any country, or in public use or on sale in the United States of America, for more than one year prior to the filing date of this United States application;

THAT I do not know and do not believe that the same invention was first patented or made the subject of an inventor's certificate that issued in any country foreign to the United States of America before the filing date of this United States application if the foreign application was filed by me (us), or by my (our) legal representatives or assigns, more than twelve months (six months for design patents) prior to the filing date of this United States application;

THAT I have reviewed and understand the contents of the above-identified specification, including the claim(s), as amended by any amendment specifically referred to above;

THAT I believe that the above-identified specification contains a written description of the invention, and of the manner and process of making and using it, in such full, clear,

concise, and exact terms as to enable any person skilled in the art to which it pertains, or with which it is most nearly connected, to make and use the invention, and sets forth the best mode contemplated by me of carrying out the invention; and

THAT I acknowledge the duty to disclose to the U.S. Patent and Trademark Office all information known to me to be material to patentability as defined in Title 37, Code of Federal Regulations, §1.56.

I HEREBY CLAIM foreign priority benefits under Title 35, United States Code §119(a)-(d) or § 365(b) of any foreign application(s) for patent or inventor's certificate, or §365(a) of any PCT international application which designated at least one country other than the United States of America, listed below and have also identified below any foreign application for patent or inventor's certificate or of any PCT international application having a filing date before that of the application on which priority is claimed.

Prior Foreign Application Number	Country	Foreign Filing Date	Priority Claimed?	Certified Copy Attached?

I HEREBY CLAIM the benefit under Title 35, United States Code § 119(e) of any United States provisional application(s) listed below.

U.S. Provisional Application Number	Filing Date
60/448,920	02/24/2003
60/484,658	07/07/2003
60/518,649	11/12/2003
60/532,900	12/30/2003

I HEREBY CLAIM the benefit under Title 35, United States Code, §120 of any United States application(s), or § 365(c) of any PCT international application designating the United States of America, listed below and, insofar as the subject matter of each of the claims of this application is not disclosed in the prior United States or PCT International application in the manner provided by the first paragraph of Title 35, United States Code, § 112, I acknowledge the duty to disclose information which is material to patentability as defined in Title 37, Code of Federal Regulations, § 1.56 which became available between the filing date of the prior application and the national or PCT international filing date of this application.

U.S. Parent Application Number	PCT Parent Application Number	Parent Filing Date	Parent Patent Number
29/196,714		01/02/2004	
29/196,713		01/02/2004	
29/196,712		01/02/2004	

I HEREBY APPOINT the registered attorneys and agents at Customer Number 22428

Customer Number: 22428

to have full power to prosecute this application and any continuations, divisions, reissues, and reexaminations thereof, to receive the patent, and to transact all business in the United States Patent and Trademark Office connected therewith.

I request that all correspondence be directed to:

Andrew E. Rawlins
FOLEY & LARDNER LLP
Customer Number: 22428

Telephone: (202) 672-5349
Facsimile: (202) 672-5399

I UNDERSTAND AND AGREE THAT the foregoing attorneys and agents appointed by me to prosecute this application do not personally represent me or my legal interests, but instead represent the interests of the legal owner(s) of the invention described in this application.

I FURTHER DECLARE THAT all statements made herein of my own knowledge are true, and that all statements made on information and belief are believed to be true; and further that these statements were made with the knowledge that willful false statements and the like so made are punishable by fine or imprisonment, or both, under Section 1001 of Title 18 of the United States Code, and that such willful false statements may jeopardize the validity of the application or any patent issuing thereon.

Name of first inventor	Radmond Vincent ARCETA
Residence	Manassas, Virginia
Citizenship	USA
Post Office Address	10503 Lariat Lane, Apt. 12 Manassas, Virginia 20109
Inventor's signature	Radmond Arceta
Date	7/20/04

Name of second inventor	Craig Kevin ROGERS
Residence	Stephens City, Virginia
Citizenship	USA
Post Office Address	102 Lariat Court Stephens City, Virginia 22655
Inventor's signature	Craig Kevin Rogers
Date	7/20/04

Name of third inventor	Kevin Thomas FITZPATRICK
Residence	Winchester, Virginia
Citizenship	USA
Post Office Address	325 George Street Winchester, Virginia 22601
Inventor's signature	Kevin T. Fitzpatrick
Date	07/20/04

Name of fourth inventor	Bryan Scott RITCHIE
Residence	Clear Brook, Virginia
Citizenship	USA
Post Office Address	779 Ruebuck Road Clear Brook, Virginia 22624
Inventor's signature	Bryan Scott Ritchie
Date	7/20/04

Name of fifth inventor	Marin John PHILPOTT
Residence	Winchester, Virginia
Citizenship	USA
Post Office Address	611 Manito Trail Winchester, Virginia 22602
Inventor's signature	Marin John Philpott
Date	7/20/04

Name of sixth inventor	Christina Louise FORTNER
Residence	Stephens City, Virginia
Citizenship	USA
Post Office Address	151 Lexington Court Stephens City, Virginia 22655
Inventor's signature	
Date	July 29 2004

IN THE UNITED STATES PATENT AND TRADEMARK OFFICE

Applicant: Radmond ARCETA et al.

Title: MEDICAL CART, MEDICATION MODULE, HEIGHT ADJUSTMENT MECHANISM, AND METHOD OF MEDICATION TRANSPORT

Prior Appl. No.: 12/550,771

Prior Appl. Filing Date: 8/31/2009

Examiner: Unassigned

Art Unit: Unassigned

CONTINUING PATENT APPLICATION TRANSMITTAL LETTER

Commissioner for Patents
P.O. Box 1450
Alexandria, VA 22313-1450

Sir:

Transmitted herewith for filing under 37 C.F.R. § 1.53(b) is a:

[**X**] Continuation [ ] Division [ ] Continuation-In-Part (CIP)

of the above-identified copending prior application in which no patenting, abandonment, or termination of proceedings has occurred. Priority to the above-identified prior application is hereby claimed under 35 U.S.C. § 120 for this continuing application. The entire disclosure of the above-identified prior application is considered as being part of the disclosure of the accompanying continuing application and is hereby incorporated by reference therein.

[ ] Applicant claims small entity status under 37 CFR 1.27.

Enclosed are:

[**X**] Description, Claim(s), and Abstract (26 pages).

[**X**] Formal drawings (20 sheets, Figures 1-24).

[**X**] Declaration and Power of Attorney (5 pages).

[**X**] Information Disclosure Statement.

[**X**] Form PTO/SB/08 with copies of 42 listed reference(s).

[**X**] Application Data Sheet (37 CFR 1.76).

The adjustment to the number of sheets for EFS-Web filing follows:

Number of Sheets		**EFS-Web Adjustment**	**Number of Sheets for EFS-Web**
46	x	75%	35

The filing fee is calculated below:

	Number Filed		**Included in Basic Fee**		**Extra**		Rate		Fee Totals
Basic Filing Fee							$330.00	=	$330.00
Search Fee							$540.00		$540.00
Examination Fee							$220.00		$220.00
Size Fee	35	-	100	=	0	x	$270.00		$0.00
Total Claims:	24	-	20	=	4	x	$52.00	=	$208.00
Independents:	3	-	3	=	0	x	$220.00	=	$0.00
If any Multiple Dependent Claim(s) present:						+	$390.00	=	$0.00
Surcharge under 37 CFR 1.16(e) for late filing of Executed Declaration or late payment of filing fee						+	$130.00	=	$0.00
							SUBTOTAL:	=	$1298.00
[ ]							Small Entity Fees Apply (subtract ½ of above):	=	0
							Basic Filing Fee Reduction for Filing via EFS-Web		$0.00
							TOTAL FILING FEE:	=	$1298.00
Assignment Recordation Fee:						+	$40.00	=	$0.00
Processing Fee under 37 CFR 1.17(i) for Late Filing of English Translation of Application:						+	$130.00	=	$0.00
TOTAL FEE								**=**	**$1298.00**

The above-identified fees of $1298.00 are being paid by credit card via EFS-Web.

The Commissioner is hereby authorized to charge any additional fees which may be required regarding this application under 37 C.F.R. §§ 1.16-1.17, or credit any overpayment, to Deposit Account No. 19-0741. Should no proper payment be enclosed herewith, as by the credit card payment instructions in EFS-Web being incorrect or absent, resulting in a rejected or incorrect credit card transaction, the Commissioner is authorized to charge the unpaid amount to Deposit Account No. 19-0741.

Please direct all correspondence to the undersigned attorney or agent at the address indicated below.

Respectfully submitted,

Date July 20, 2011

By

FOLEY & LARDNER LLP
Customer Number: 22428
Telephone: (202) 672-5349
Facsimile: (202) 672-5399

Andrew E. Rawlins
Attorney for Applicant
Registration No. 34,702

IN THE UNITED STATES PATENT AND TRADEMARK OFFICE

Applicant:	Radmond ARCETA et al.
Title:	MEDICAL CART, MEDICATION MODULE, HEIGHT ADJUSTMENT MECHANISM, AND METHOD OF MEDICATION TRANSPORT
Prior Appl. No.:	12/550,771
Prior Appl. Filing Date:	8/31/2009
Examiner:	Unassigned
Art Unit:	Unassigned
Confirmation Number:	Unassigned

INFORMATION DISCLOSURE STATEMENT UNDER 37 CFR §1.56

Commissioner for Patents
P.O. Box 1450
Alexandria, VA 22313-1450

Sir:

Submitted herewith on Form PTO/SB/08 is a listing of the documents cited by or submitted to the U.S. PTO in parent application Serial No. 12/550,771, filed August 31, 2009. As provided in 37 CFR §1.98(d), copies of the documents are not being provided since they were previously submitted to the United States Patent & Trademark Office in the above-identified parent application.

The submission of any document herewith, which is not a statutory bar, is not intended as an admission that such document constitutes prior art against the claims of the present application or that such document is considered material to patentability as defined in 37 CFR §1.56(b). Applicants do not waive any rights to take any action which would be

appropriate to antedate or otherwise remove as a competent reference any document which is determined to be a *prima facie* art reference against the claims of the present application.

TIMING OF THE DISCLOSURE

The listed documents are being submitted in compliance with 37 CFR §1.97(b), within three (3) months of the filing date of the application.

RELEVANCE OF EACH DOCUMENT

All of the documents are in English.

Applicants respectfully request that each listed document be considered by the Examiner and be made of record in the present application and that an initialed copy of Form PTO/SB/08 be returned in accordance with MPEP §609.

Although Applicant believes that no fee is required, the Commissioner is hereby authorized to charge any additional fees which may be due to Deposit Account No. 19-0741.

Respectfully submitted,

Date July 20, 2011

By

FOLEY & LARDNER LLP
Customer Number: 22428
Telephone: (202) 672-5349
Facsimile: (202) 672-5399

Andrew E. Rawlins
Attorney for Applicant
Registration No. 34,702

Under the Paperwork Reduction Act of 1995, no persons are required to respond to a collection of information unless it contains a valid OMB control number.

Substitute for form 1449/PTO				Complete if Known	
INFORMATION DISCLOSURE STATEMENT BY APPLICANT				**Application Number**	Unassigned
				Filing Date	Unassigned
Date Submitted: July 20, 2011				**First Named Inventor**	Radmond Vincent ARCETA
				Art Unit	Unassigned
(use as many sheets as necessary)				**Examiner Name**	Unassigned
Sheet	1	of	2	**Attorney Docket Number**	086554-1553

U.S. PATENT DOCUMENTS

Examiner Initials*	Cite No.[1]	Document Number Number-Kind Code[2] (*if known*)	Publication Date MM-DD-YYYY	Name of Patentee or Applicant of Cited Document	Pages, Columns, Lines, Where Relevant Passages or Relevant Figures Appear
	A1	US-3,024,036	03-1962	Reynolds, Henry E.	
	A2	US-3,031,207	04-1962	Bard, Elmer H.	
	A3	US-3,208,768	09-1965	Hulbert, Reed O.	
	A4	US-3,910,659	10-1975	Peterson, Warren J.	
	A5	US-4,071,740	01-1978	Gogulski, Paul	
	A6	US-4,127,202	11-1978	Jennings et al.	
	A7	US-4,440,096	04-1984	Rice et al.	
	A8	US-4,735,469	04-1988	Liggett, Philip R.	
	A9	US-4,875,696	10-1989	Welch et al.	
	A10	US-4,894,600	01-1990	Kearney, Deborah A.	
	A11	US-4,967,928	11-1990	Carter, Cheryl L.	
	A12	US-4,986,555	01-1991	Andreen, Gunnar B.	
	A13	US-5,842,708	12-1998	Miyaoka, Norikuni	
	A14	US-5,058,911	10-1991	Hunter et al.	
	A15	US-5,151,581	09-1992	Krichever et al.	
	A16	US-5,174,223	12-1992	Nagy et al.	
	A17	US-5,257,767	11-1993	McConnell, Dale K.	
	A18	US-5,704,625	01-1998	Presnell et al.	
	A19	US-5,734,839	03-1998	Enoki et al.	
	A20	US-5,758,848	06-1998	Beule, Erhard	
	A21	US-5,841,361	11-1998	Hoffman, Ronald J.	
	A22	US-6,050,660	04-2000	Gurley, Sherwin L.	
	A23	US-6,073,942	06-2000	Heneveld, Sr., William R.	
	A24	US-6,219,587	04-2001	Ahlin et al.	
	A25	US-6,418,854	07-2002	Kraft, Edwin R.	
	A26	US-6,435,407	08-2002	Fiordelisi, Luigi	
	A27	US-6,484,939	11-2002	Blaeuer, Dennis C.	
	A28	US-6,493,220	12-2002	Clark et al.	
	A29	US-6,578,501	06-2003	Moore, Lorraine	
	A30	US-6,615,744	09-2003	Eckstein et al.	
	A31	US-6,626,445	09-2003	Murphy et al.	
	A32	US-6,682,030	01-2004	Santoro et al.	
	A33	US-6,721,178	04-2004	Clark et al.	
	A34	US-6,722,673	04-2004	Hamlin, H. L. Roy	
	A35	US-6,860,494	03-2005	Chisholm, Karan L.	
	A36	US-6,874,807	04-2005	Labadle et al.	
	A37	US-6,883,439	04-2005	Moore, Lorraine	
	A38	US-7,104,556	09-2006	Young, Scot	

Examiner Signature		Date Considered	

*EXAMINER: Initial if reference considered, whether or not citation is in conformance with MPEP 609. Draw line through citation if not in conformance and not considered. Include copy of this form with next communication to applicant. 1 Applicant's unique citation designation number (optional). 2 See Kinds Codes of USPTO Patent Documents at www.uspto.gov or MPEP 901.04. 3 Enter Office that issued the document, by the two-letter code (WIPO Standard ST.3). 4 For Japanese patent documents, the indication of the year of the reign of the Emperor must precede the serial number of the patent document. 5 Kind of document by the appropriate symbols as indicated on the document under WIPO Standard ST.16 if possible. 6 Applicant is to place a check mark here if English language Translation is attached.

This collection of information is required by 37 CFR 1.97 and 1.98. The information is required to obtain or retain a benefit by the public which is to file (and by the USPTO to process) an application. Confidentiality is governed by 35 U.S.C. 122 and 37 CFR 1.14. This collection is estimated to take 2 hours to complete, including gathering, preparing, and submitting the completed application form to the USPTO. Time will vary depending upon the individual case. Any comments on the amount of time you require to complete this form and/or suggestions for reducing this burden, should be sent to the Chief Information Officer, U.S. Patent and Trademark Office, P.O. Box 1450, Alexandria, VA 22313-1450. DO NOT SEND FEES OR COMPLETED FORMS TO THIS ADDRESS. **SEND TO: Commissioner for Patents, P.O. Box 1450, Alexandria, VA 22313-1450**.

If you need assistance in completing the form, call 1-800-PTO-9199 (1-800-786-9199) and select option 2.

PTO/SB/08 (09-06)
Approved for use through 03/31/2007. OMB 0651-0031
U.S. Patent and Trademark Office: U.S. DEPARTMENT OF COMMERCE
Under the Paperwork Reduction Act of 1995, no persons are required to respond to a collection of information unless it contains a valid OMB control number.

Substitute for form 1449/PTO

INFORMATION DISCLOSURE STATEMENT BY APPLICANT

Date Submitted: July 20, 2011

(use as many sheets as necessary)

Sheet	2	of	2

Complete if Known	
Application Number	Unassigned
Filing Date	Unassigned
First Named Inventor	Radmond Vincent ARCETA
Art Unit	Unassigned
Examiner Name	Unassigned
Attorney Docket Number	086554-1553

U.S. PATENT DOCUMENTS

		Document Number			
	A39	**US-7,490,837**	**02-2009**	**Pond et al.**	
	A40	**US-2002/0125664**	**09-2002**	**Eriksson et al.**	
	A41	**US-2002/0165641**	**11-2002**	**Manalang et al.**	

UNPUBLISHED U.S. PATENT APPLICATION DOCUMENTS

Examiner Initials*	Cite No.[1]	U.S. Patent Application Document Serial Number-Kind Code[2] (*if known*)	Filing Date of Cited Document MM-DD-YYYY	Name of Patentee or Applicant of Cited Document	Pages, Columns, Lines, Where Relevant Passages or Relevant Figures Appear

FOREIGN PATENT DOCUMENTS

Examiner Initials*	Cite No.[1]	Foreign Patent Document Country Code[3]-Number[4]-Kind Code[5] (*if known*)	Publication Date MM-DD-YYYY	Name of Patentee or Applicant of Cited Documents	Pages, Columns, Lines, Where Relevant Passages or Relevant Figures Appear	T[6]

NON PATENT LITERATURE DOCUMENTS

Examiner Initials*	Cite No.[1]	Include name of the author (in CAPITAL LETTERS), title of the article (when appropriate), title of the item (book, magazine, journal, serial, symposium, catalog, etc.) date, page(s), volume-issue number(s), publisher, city and/or country where published.	T[6]

Examiner Signature		Date Considered	

*EXAMINER: Initial if reference considered, whether or not citation is in conformance with MPEP 609. Draw line through citation if not in conformance and not considered. Include copy of this form with next communication to applicant. 1 Applicant's unique citation designation number (optional). 2 See Kinds Codes of USPTO Patent Documents at www.uspto.gov or MPEP 901.04. 3 Enter Office that issued the document, by the two-letter code (WIPO Standard ST.3). 4 For Japanese patent documents, the indication of the year of the reign of the Emperor must precede the serial number of the patent document. 5 Kind of document by the appropriate symbols as indicated on the document under WIPO Standard ST.16 if possible. 6 Applicant is to place a check mark here if English language Translation is attached.

This collection of information is required by 37 CFR 1.97 and 1.98. The information is required to obtain or retain a benefit by the public which is to file (and by the USPTO to process) an application. Confidentiality is governed by 35 U.S.C. 122 and 37 CFR 1.14. This collection is estimated to take 2 hours to complete, including gathering, preparing, and submitting the completed application form to the USPTO. Time will vary depending upon the individual case. Any comments on the amount of time you require to complete this form and/or suggestions for reducing this burden, should be sent to the Chief Information Officer, U.S. Patent and Trademark Office, P.O. Box 1450, Alexandria, VA 22313-1450. DO NOT SEND FEES OR COMPLETED FORMS TO THIS ADDRESS. **SEND TO: Commissioner for Patents, P.O. Box 1450, Alexandria, VA 22313-1450**.

If you need assistance in completing the form, call 1-800-PTO-9199 (1-800-786-9199) and select option 2.

Electronic Patent Application Fee Transmittal

Application Number:	
Filing Date:	
Title of Invention:	MEDICAL CART, MEDICATION MODULE, HEIGHT ADJUSTMENT MECHANISM, AND METHOD OF MEDICATION TRANSPORT
First Named Inventor/Applicant Name:	Radmond ARCETA
Filer:	Andrew E. Rawlins./Kimberley Cox-Baione
Attorney Docket Number:	086554-1553

Filed as Large Entity

Utility under 35 USC 111(a) Filing Fees

Description	Fee Code	Quantity	Amount	Sub-Total in USD($)
Basic Filing:				
Utility application filing	1011	1	330	330
Utility Search Fee	1111	1	540	540
Utility Examination Fee	1311	1	220	220
Pages:				
Claims:				
Claims in excess of 20	1202	4	52	208
Miscellaneous-Filing:				
Petition:				

Description	Fee Code	Quantity	Amount	Sub-Total in USD($)
Patent-Appeals-and-Interference:				
Post-Allowance-and-Post-Issuance:				
Extension-of-Time:				
Miscellaneous:				
		Total in USD ($)		**1298**

Electronic Acknowledgement Receipt

EFS ID:	10563897
Application Number:	13187328
International Application Number:	
Confirmation Number:	6052
Title of Invention:	MEDICAL CART, MEDICATION MODULE, HEIGHT ADJUSTMENT MECHANISM, AND METHOD OF MEDICATION TRANSPORT
First Named Inventor/Applicant Name:	Radmond ARCETA
Customer Number:	22428
Filer:	Andrew E. Rawlins./Kimberley Cox-Baione
Filer Authorized By:	Andrew E. Rawlins.
Attorney Docket Number:	086554-1553
Receipt Date:	20-JUL-2011
Filing Date:	
Time Stamp:	18:50:28
Application Type:	Utility under 35 USC 111(a)

Payment information:

Submitted with Payment	yes
Payment Type	Credit Card
Payment was successfully received in RAM	$1298
RAM confirmation Number	6650
Deposit Account	
Authorized User	

File Listing:

Document Number	Document Description	File Name	File Size(Bytes)/ Message Digest	Multi Part /.zip	Pages (if appl.)

1	Transmittal of New Application	Transmittal.pdf	102534 31c018d6f12fbeacacadf92cf3e0d7acaa641d27	no	3
Warnings:					
Information:					
2	Application Data Sheet	ADS.pdf	66873 b4c128d92e7fc9c1fd3f3b07c4583a73ead43b33	no	6
Warnings:					
Information:					
This is not an USPTO supplied ADS fillable form					
3		Specification.pdf	149764 8b27788692be752582ffbd5c23363ad66b889ee8	yes	26
	Multipart Description/PDF files in .zip description				
	Document Description		**Start**	**End**	
	Specification		1	20	
	Claims		21	25	
	Abstract		26	26	
Warnings:					
Information:					
4	Drawings-only black and white line drawings	Figures.pdf	585137 9e147713e60d1d1c23975bbda08315931dfc120d	no	20
Warnings:					
Information:					
5	Oath or Declaration filed	DECandPOA.pdf	224434 2573e1c19eea609709d388325f232d31114f1963	no	5
Warnings:					
Information:					
6	Information Disclosure Statement (IDS) Form (SB08)	IDSandSB08.pdf	198497 9637e4a84b061339770d5d68ed2a5336ef7d286e	no	4
Warnings:					
Information:					
This is not an USPTO supplied IDS fillable form					
7	Fee Worksheet (SB06)	fee-info.pdf	36926 eee7e033cc3f168c379d0cf9d1d755e61e4034e2	no	2

Warnings:	
Information:	
Total Files Size (in bytes):	1364165

This Acknowledgement Receipt evidences receipt on the noted date by the USPTO of the indicated documents, characterized by the applicant, and including page counts, where applicable. It serves as evidence of receipt similar to a Post Card, as described in MPEP 503.

New Applications Under 35 U.S.C. 111
If a new application is being filed and the application includes the necessary components for a filing date (see 37 CFR 1.53(b)-(d) and MPEP 506), a Filing Receipt (37 CFR 1.54) will be issued in due course and the date shown on this Acknowledgement Receipt will establish the filing date of the application.

National Stage of an International Application under 35 U.S.C. 371
If a timely submission to enter the national stage of an international application is compliant with the conditions of 35 U.S.C. 371 and other applicable requirements a Form PCT/DO/EO/903 indicating acceptance of the application as a national stage submission under 35 U.S.C. 371 will be issued in addition to the Filing Receipt, in due course.

New International Application Filed with the USPTO as a Receiving Office
If a new international application is being filed and the international application includes the necessary components for an international filing date (see PCT Article 11 and MPEP 1810), a Notification of the International Application Number and of the International Filing Date (Form PCT/RO/105) will be issued in due course, subject to prescriptions concerning national security, and the date shown on this Acknowledgement Receipt will establish the international filing date of the application.

PTO/SB/06 (07-06)
Approved for use through 1/31/2007. OMB 0651-0032
U.S. Patent and Trademark Office; U.S. DEPARTMENT OF COMMERCE
Under the Paperwork Reduction Act of 1995, no persons are required to respond to a collection of information unless it displays a valid OMB control number.

PATENT APPLICATION FEE DETERMINATION RECORD

Substitute for Form PTO-875

Application or Docket Number	Filing Date	☐ To be Mailed
13/187,328	07/20/2011	

APPLICATION AS FILED – PART I

FOR	(Column 1) NUMBER FILED	(Column 2) NUMBER EXTRA	SMALL ENTITY ☐ RATE ($)	SMALL ENTITY FEE ($)	OR	OTHER THAN SMALL ENTITY RATE ($)	OTHER THAN SMALL ENTITY FEE ($)
☒ BASIC FEE (37 CFR 1.16(a), (b), or (c))	N/A	N/A	N/A			N/A	330
☒ SEARCH FEE (37 CFR 1.16(k), (i), or (m))	N/A	N/A	N/A			N/A	540
☒ EXAMINATION FEE (37 CFR 1.16(o), (p), or (q))	N/A	N/A	N/A			N/A	220
TOTAL CLAIMS (37 CFR 1.16(i))	24 minus 20 =	* 4	X $ =		OR	X $52 =	208
INDEPENDENT CLAIMS (37 CFR 1.16(h))	3 minus 3 =	* 0	X $ =			X $220 =	0
☐ APPLICATION SIZE FEE (37 CFR 1.16(s))	If the specification and drawings exceed 100 sheets of paper, the application size fee due is $250 ($125 for small entity) for each additional 50 sheets or fraction thereof. See 35 U.S.C. 41(a)(1)(G) and 37 CFR 1.16(s).						
☐ MULTIPLE DEPENDENT CLAIM PRESENT (37 CFR 1.16(j))							
* If the difference in column 1 is less than zero, enter "0" in column 2.			TOTAL			TOTAL	1298

APPLICATION AS AMENDED – PART II

AMENDMENT	(Column 1) CLAIMS REMAINING AFTER AMENDMENT		(Column 2) HIGHEST NUMBER PREVIOUSLY PAID FOR	(Column 3) PRESENT EXTRA	SMALL ENTITY RATE ($)	SMALL ENTITY ADDITIONAL FEE ($)	OR	OTHER THAN SMALL ENTITY RATE ($)	OTHER THAN SMALL ENTITY ADDITIONAL FEE ($)
Total (37 CFR 1.16(i))	*	Minus	**	=	X $ =		OR	X $ =	
Independent (37 CFR 1.16(h))	*	Minus	***	=	X $ =		OR	X $ =	
☐ Application Size Fee (37 CFR 1.16(s))									
☐ FIRST PRESENTATION OF MULTIPLE DEPENDENT CLAIM (37 CFR 1.16(j))							OR		
					TOTAL ADD'L FEE		OR	TOTAL ADD'L FEE	

AMENDMENT	(Column 1) CLAIMS REMAINING AFTER AMENDMENT		(Column 2) HIGHEST NUMBER PREVIOUSLY PAID FOR	(Column 3) PRESENT EXTRA	RATE ($)	ADDITIONAL FEE ($)		RATE ($)	ADDITIONAL FEE ($)
Total (37 CFR 1.16(i))	*	Minus	**	=	X $ =		OR	X $ =	
Independent (37 CFR 1.16(h))	*	Minus	***	=	X $ =		OR	X $ =	
☐ Application Size Fee (37 CFR 1.16(s))									
☐ FIRST PRESENTATION OF MULTIPLE DEPENDENT CLAIM (37 CFR 1.16(j))							OR		
					TOTAL ADD'L FEE		OR	TOTAL ADD'L FEE	

* If the entry in column 1 is less than the entry in column 2, write "0" in column 3.

** If the "Highest Number Previously Paid For" IN THIS SPACE is less than 20, enter "20".

*** If the "Highest Number Previously Paid For" IN THIS SPACE is less than 3, enter "3".

The "Highest Number Previously Paid For" (Total or Independent) is the highest number found in the appropriate box in column 1.

Legal Instrument Examiner:
/EVA GILLIS/

This collection of information is required by 37 CFR 1.16. The information is required to obtain or retain a benefit by the public which is to file (and by the USPTO to process) an application. Confidentiality is governed by 35 U.S.C. 122 and 37 CFR 1.14. This collection is estimated to take 12 minutes to complete, including gathering, preparing, and submitting the completed application form to the USPTO. Time will vary depending upon the individual case. Any comments on the amount of time you require to complete this form and/or suggestions for reducing this burden, should be sent to the Chief Information Officer, U.S. Patent and Trademark Office, U.S. Department of Commerce, P.O. Box 1450, Alexandria, VA 22313-1450. DO NOT SEND FEES OR COMPLETED FORMS TO THIS ADDRESS. **SEND TO: Commissioner for Patents, P.O. Box 1450, Alexandria, VA 22313-1450.**

If you need assistance in completing the form, call 1-800-PTO-9199 and select option 2.