US008215650B2

(12) **United States Patent**
Arceta et al.

(10) **Patent No.: US 8,215,650 B2**
(45) **Date of Patent: Jul. 10, 2012**

(54) **MEDICAL CART, MEDICATION MODULE, HEIGHT ADJUSTMENT MECHANISM, AND METHOD OF MEDICATION TRANSPORT**

(75) Inventors: **Radmond Vincent Arceta**, Manassas, VA (US); **Craig Kevin Rogers**, Stephens City, VA (US); **Kevin Thomas Fitzpatrick**, Winchester, VA (US); **Bryan Scott Ritchie**, Clear Brook, VA (US); **Marin John Philpott**, Winchester, VA (US); **Christina Louise Fortner**, Stephens City, VA (US)

(73) Assignee: **Rubbermaid Incorporated**, Huntersville, NC (US)

(*) Notice: Subject to any disclaimer, the term of this patent is extended or adjusted under 35 U.S.C. 154(b) by 0 days.

(21) Appl. No.: **13/187,328**

(22) Filed: **Jul. 20, 2011**

(65) **Prior Publication Data**

US 2011/0272902 A1 Nov. 10, 2011

Related U.S. Application Data

(60) Continuation of application No. 12/550,771, filed on Aug. 31, 2009, now abandoned, which is a division of application No. 12/193,346, filed on Aug. 18, 2008, now Pat. No. 7,594,668, which is a continuation of application No. 10/783,030, filed on Feb. 23, 2004, now abandoned, which is a continuation-in-part of application No. 29/196,712, filed on Jan. 2, 2004, now Pat. No. Des. 515,767, and a continuation-in-part of application No. 29/196,713, filed on Jan. 2, 2004, now Pat. No. Des. 518,267, and a continuation-in-part of application No. 29/196,714, filed on Jan. 2, 2004, now Pat. No. Des. 517,768.

(60) Provisional application No. 60/448,920, filed on Feb. 24, 2003, provisional application No. 60/484,658, filed on Jul. 7, 2003, provisional application No. 60/518,649, filed on Nov. 12, 2003, provisional application No. 60/532,900, filed on Dec. 30, 2003.

(51) **Int. Cl.**
B62B 3/02 (2006.01)

(52) **U.S. Cl.** **280/47.35**; 108/147.19

(58) **Field of Classification Search** 280/47.34, 280/47.35, 79.11, 79.2, 33.991, 33.992, 638, 280/651; 108/147.19, 147.21; 235/431
See application file for complete search history.

(56) **References Cited**

U.S. PATENT DOCUMENTS

D146,375	S	2/1947	Obrig
3,024,036	A	3/1962	Reynolds
3,031,207	A	4/1962	Bard
3,208,768	A	9/1965	Hulbert
3,910,659	A	10/1975	Peterson

(Continued)

OTHER PUBLICATIONS

iCart PointofCare Brochure (Lionville), Jun. 2004, 2 pages.

(Continued)

Primary Examiner — Frank Vanaman
(74) *Attorney, Agent, or Firm* — Foley & Lardner LLP

(57) **ABSTRACT**

A medical cart includes a work platform having a work surface and at least one compartment, a base, and a height adjustment mechanism for adjusting the height of the work platform relative to the base. A medication module includes a plurality of compartments. The medical cart can be joined with a medication module. In addition, a plurality of medication modules can be joined to form a train. The medical cart and medication module can be used collectively and individually in a variety of methods for transferring medicine.

24 Claims, 20 Drawing Sheets

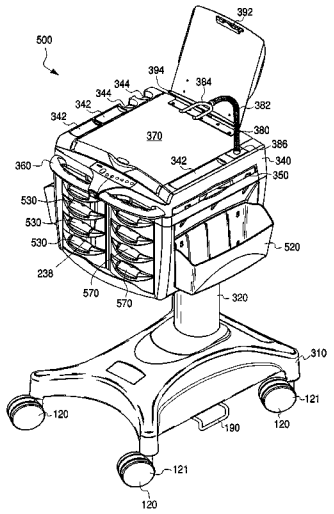

U.S. PATENT DOCUMENTS

D240,629	S		7/1976	Cope
4,071,740	A		1/1978	Gogulski
4,114,965	A	*	9/1978	Oye et al. 312/209
4,127,202	A		11/1978	Jennings et al.
4,440,096	A		4/1984	Rice et al.
4,735,469	A		4/1988	Liggett
4,875,696	A		10/1989	Welch et al.
4,894,600	A		1/1990	Kearney
4,967,928	A		11/1990	Carter
4,976,450	A	*	12/1990	Ellefson 280/79.11
4,986,555	A		1/1991	Andreen
5,058,911	A		10/1991	Hunter et al.
5,151,581	A		9/1992	Krichever et al.
5,174,223	A		12/1992	Nagy et al.
5,257,767	A		11/1993	McConnell
D349,594	S		8/1994	Bonazza
D367,381	S		2/1996	Licari
D387,168	S		12/1997	Edelman et al.
D389,917	S		1/1998	Hornback et al.
5,704,625	A		1/1998	Presnell et al.
D390,733	S		2/1998	Brunner et al.
5,734,839	A		3/1998	Enoki et al.
5,758,848	A		6/1998	Beule
5,841,361	A		11/1998	Hoffman
D402,529	S		12/1998	Husted
5,842,708	A		12/1998	Miyaoka
D410,230	S		5/1999	Witte
6,050,660	A		4/2000	Gurley
6,073,942	A		6/2000	Heneveld, Sr.
D438,952	S		3/2001	Cimino et al.
6,219,587	B1		4/2001	Ahlin et al.
D441,513	S		5/2001	Mullen et al.
6,339,732	B1	*	1/2002	Phoon et al. 700/237
D458,780	S		6/2002	Siepmann et al.
D459,477	S		6/2002	Stocks et al.
6,418,854	B1		7/2002	Kraft
6,435,407	B1		8/2002	Fiordelisi
D462,674	S		9/2002	Siepmann et al.
D465,895	S		11/2002	Pfefferle et al.
6,484,939	B1		11/2002	Blaeuer
6,493,220	B1		12/2002	Clark et al.
D468,420	S		1/2003	Bolmsjo
6,578,501	B1		6/2003	Moore
6,615,744	B1		9/2003	Eckstein et al.
6,626,445	B2		9/2003	Murphy et al.
D481,847	S		11/2003	Van Landingham, Jr.
D482,173	S		11/2003	Van Landingham, Jr.
6,682,030	B2		1/2004	Santoro et al.
D486,915	S		2/2004	Warschewske et al.
D487,178	S		2/2004	Cuzzocrea
6,721,178	B1		4/2004	Clark et al.
6,722,673	B1		4/2004	Hamlin
D497,462	S		10/2004	Ryan
D500,575	S		1/2005	Lucas
6,860,494	B1		3/2005	Chisholm
6,874,807	B1		4/2005	Labadle et al.
6,883,439	B1		4/2005	Moore
7,104,556	B1		9/2006	Young
7,490,837	B2		2/2009	Pond et al.
2002/0125664	A1		9/2002	Eriksson et al.
2002/0165641	A1		11/2002	Manalang et al.

OTHER PUBLICATIONS

Notice of Allowance dated Jul. 7, 2005 received in corresponding U.S. Appl. No. 29/196,712.
Notice of Allowance dated Jun. 1, 2005 received in corresponding U.S. Appl. No. 29/196,714.
Notice of Allowance dated May 31, 2005 received in corresponding U.S. Appl. No. 29/196,713.
Notice of Allowance received in U.S. Appl. No. 12/193,346 dated May 20, 2009.
Office Action received in U.S. Appl. No. 10/783,030 dated Jun. 26, 2006.
Office Action received in U.S. Appl. No. 10/783,030 dated Feb. 19, 2008.
Office Action received in U.S. Appl. No. 10/783,030 dated Jun. 13, 2007.
Office Action dated Jan. 28, 2011 received in corresponding U.S. Appl. No. 12/550,771.
Office Action dated Jun. 24, 2011 received in corresponding U.S. Appl. No. 12/550,771.
Photo Image of EMS Cart With Optional Locking Drawers, 1 page.
Ritter Installation and Operation Manual for 345 Procedures Cart, © Midmark Corporation—1998, 11 pages.
Supplemental Notice of Allowability dated Dec. 28, 2005 received in corresponding U.S. Appl. No. 29/196,713.
Supplemental Notice of Allowability dated Nov. 25, 2005 received in corresponding U.S. Appl. No. 29/196,712.
WWW.HOISE.COM/VMW/LV-VM-03-01-24.HTML; Virtual Medical Worlds, NorthEast Medical Center in North Carolina First to Test New EMS Mobile Clinical Workstation, Atlanta, Feb. 5, 2001, 2 pages.
WWW.INFOLOGIXSYS.COM; InfoLogix Web Page Printouts for Mobile Cart Computing: Info Carts, Organizer Cart, Mobile Laptop/ Integrated Flat Screen/Peripheral Cart, Variable Height Laptop Cart, SL-Cart and SL-Laptop Cart, © 2002-2003, 7 pages.
WWW.LIONVILLE.COM/NEWS1.HTML; Lionville Webpage Capture, Mar.-Apr. © 2004, 3 pages.
WWW.NAWARE.COM; NaWare Brochure, Nov. 5, 2001, 4 pages.

* cited by examiner

Fig. 1

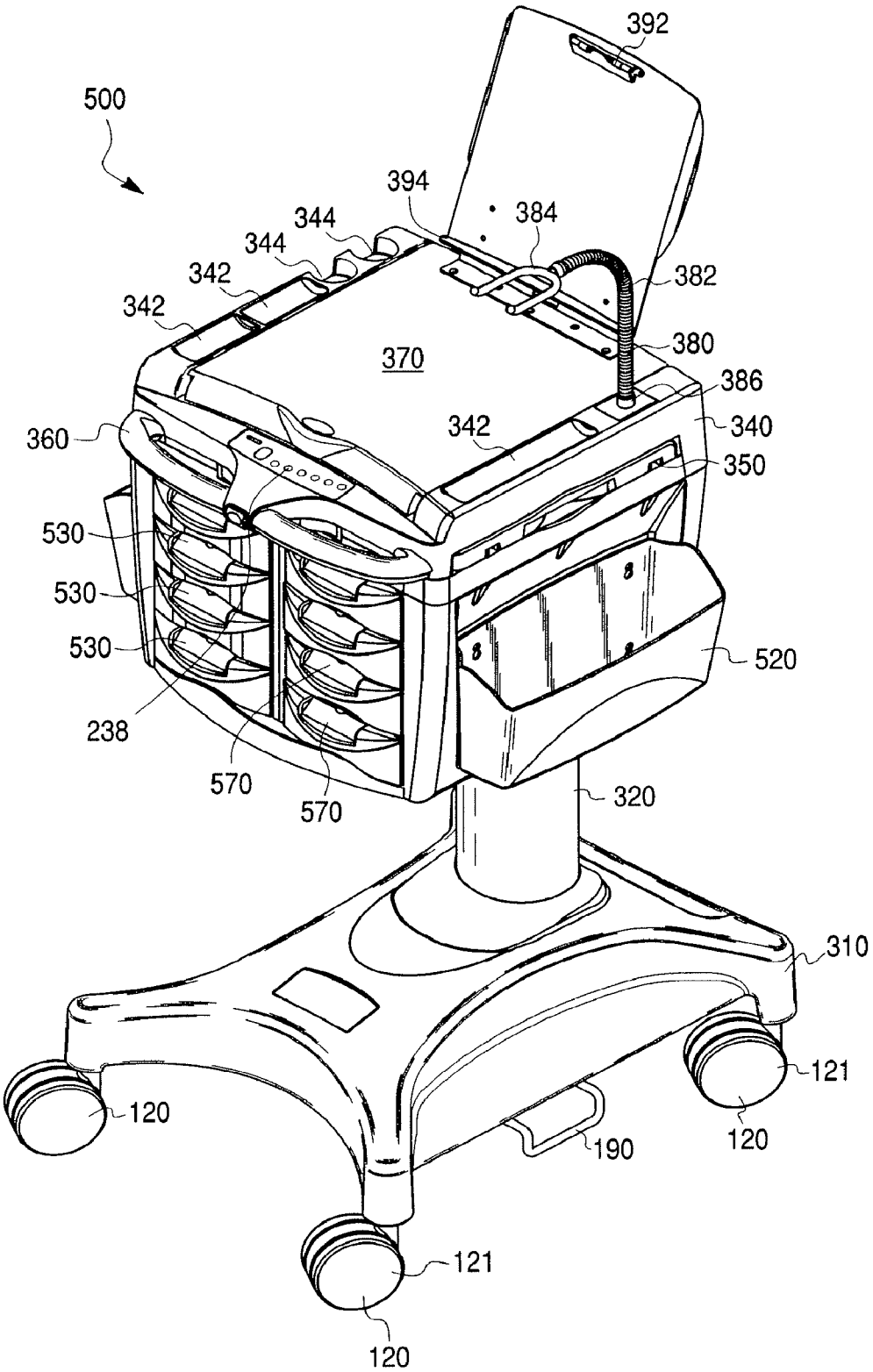
392
500
394
384
344
344
342
342
382
380
370
386
340
360
342
350
530
530
530
520
238
570
570
320
310
121
120
120
190
121
120

Fig. 2A

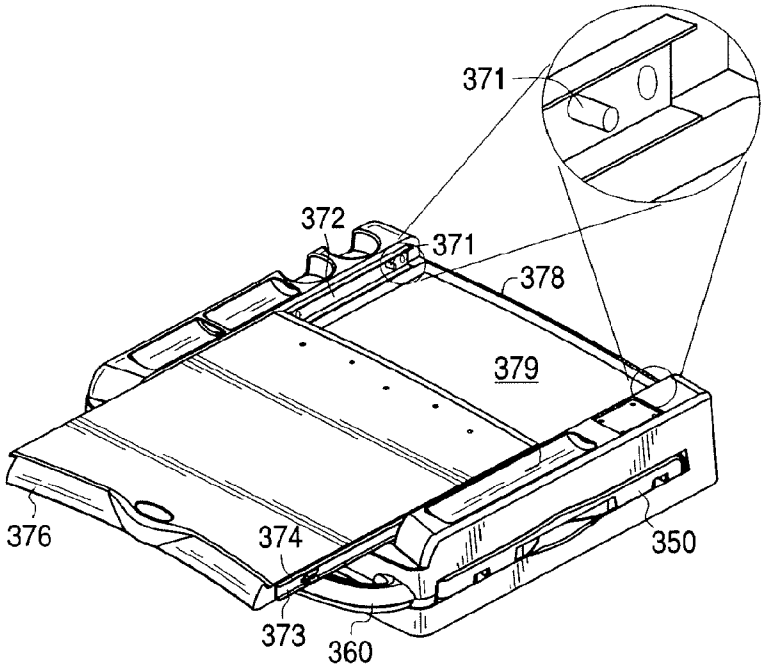
371
372
371
378
379
376
374
350
373
360

Fig. 2B

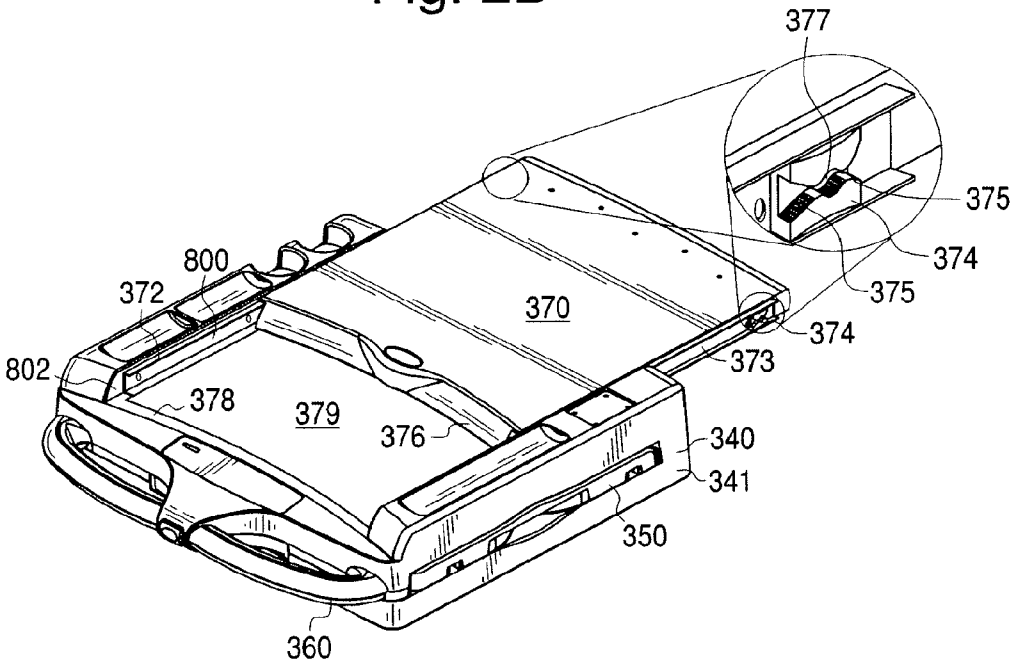
377
375
374
375
800
372
370
374
373
802
378
379
376
340
341
350
360

Fig. 3A

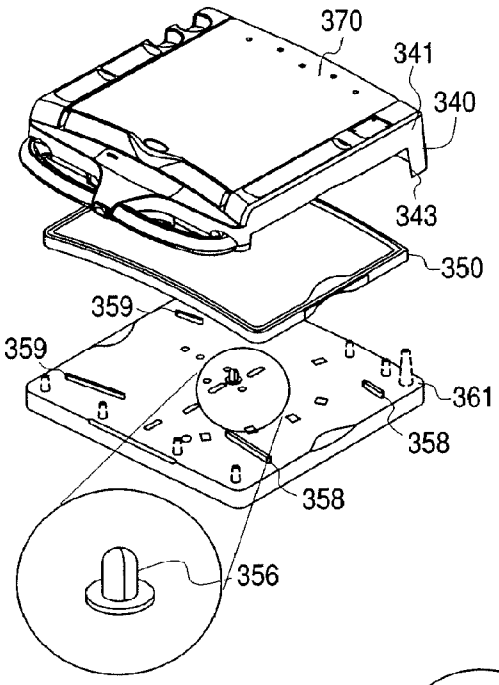

Fig. 3B

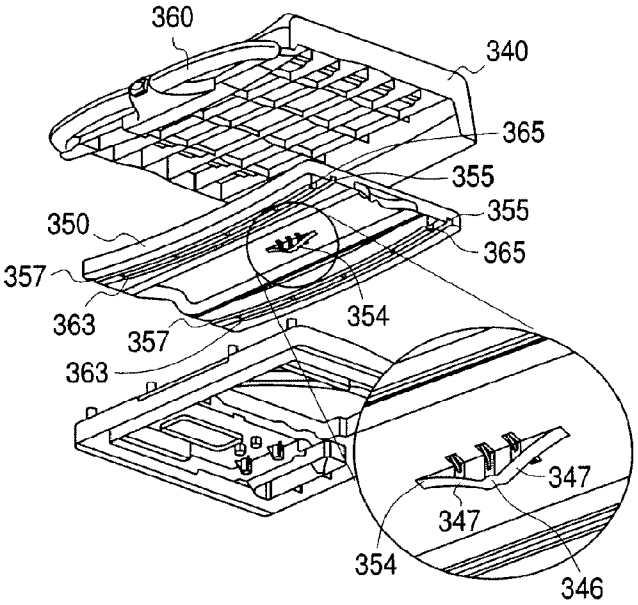

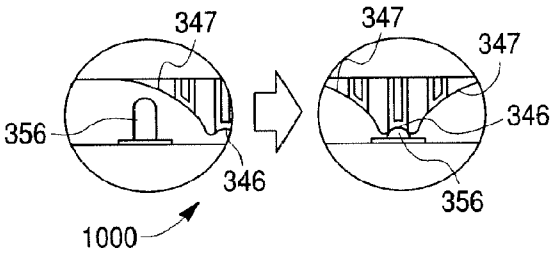

Fig. 3C

Fig. 4A

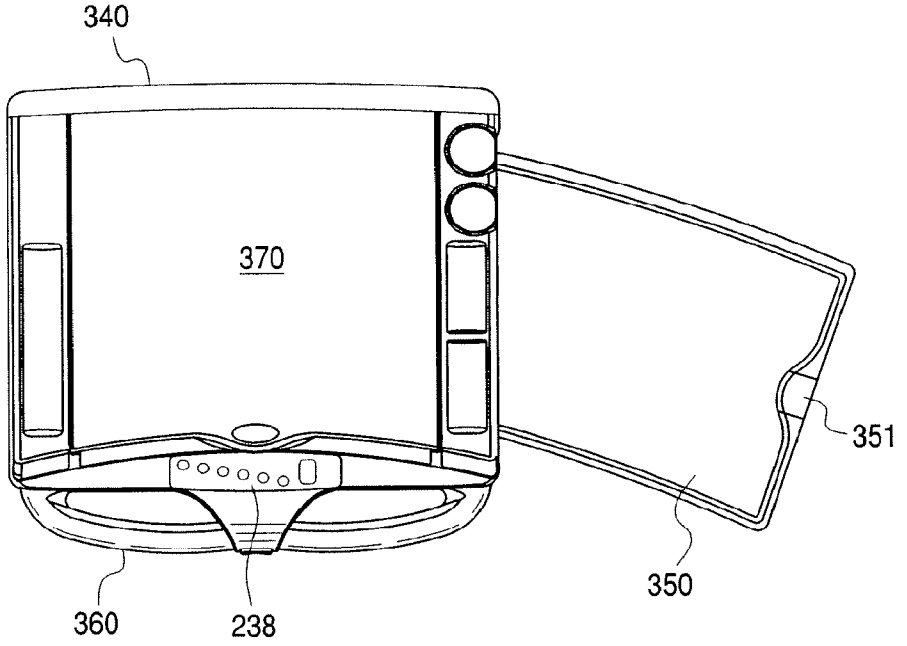

Fig. 4B

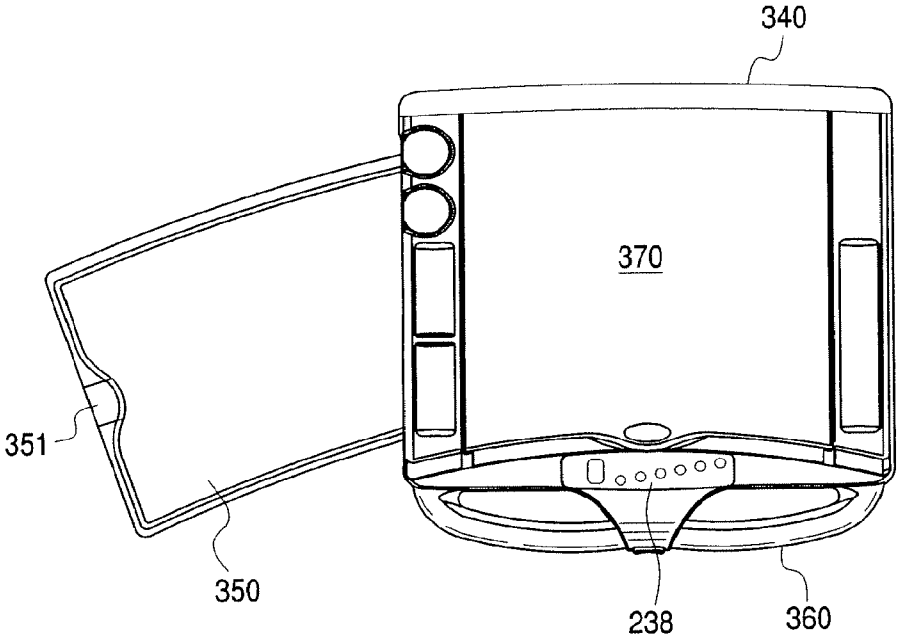

Fig. 5A

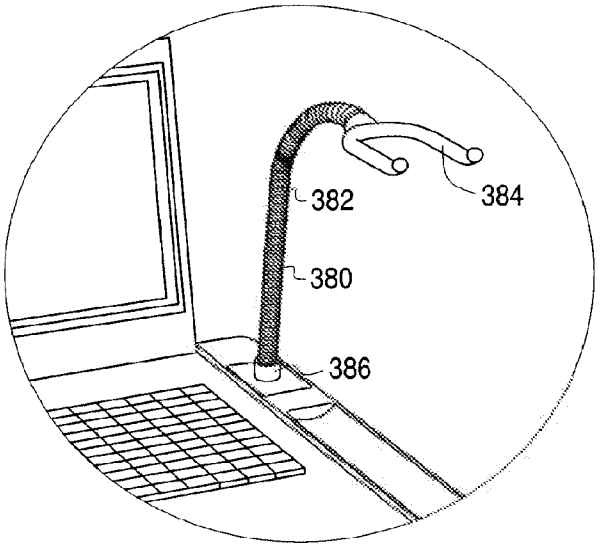

Fig. 5B

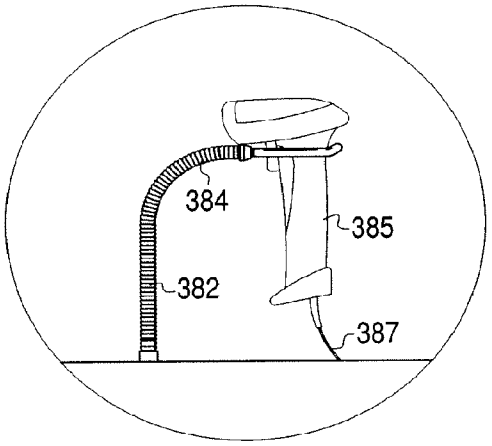

Fig. 5C

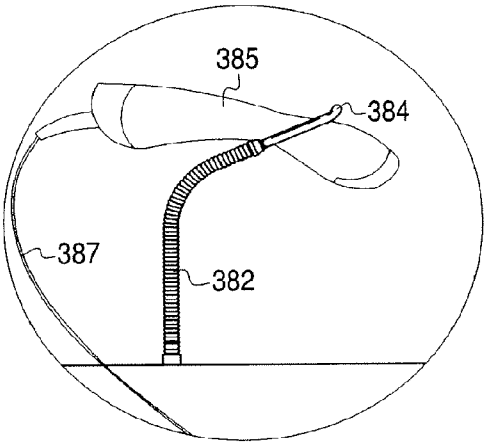

Fig. 6A

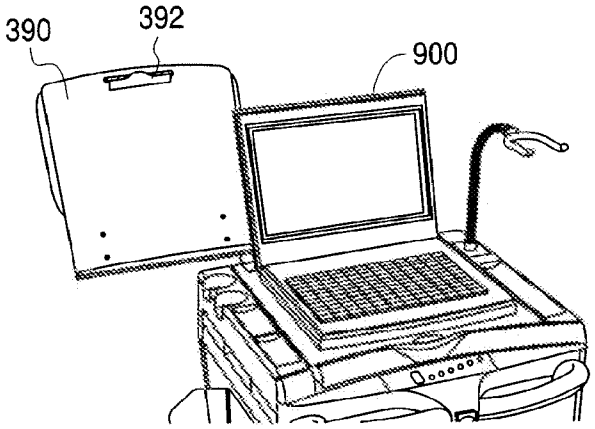

Fig. 6B

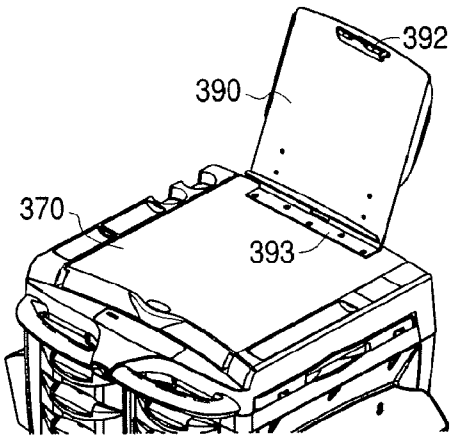

Fig. 6C

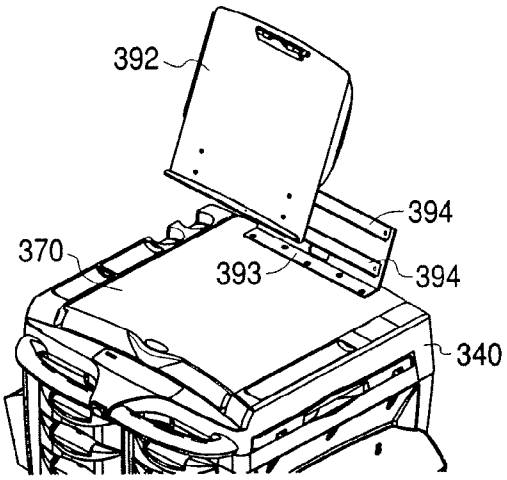

Fig. 7

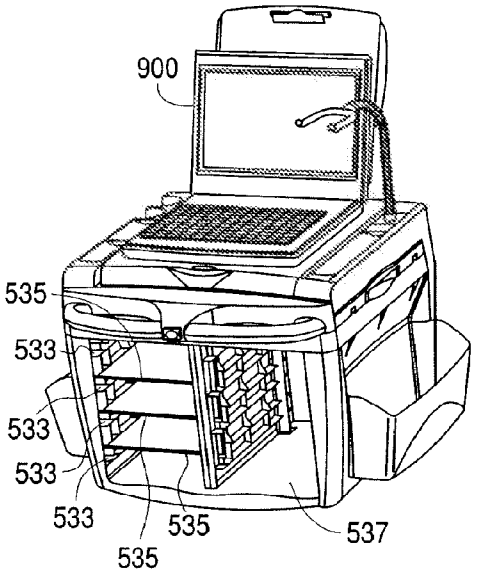
900
535
533
533
533
533
535
535
537

Fig. 8

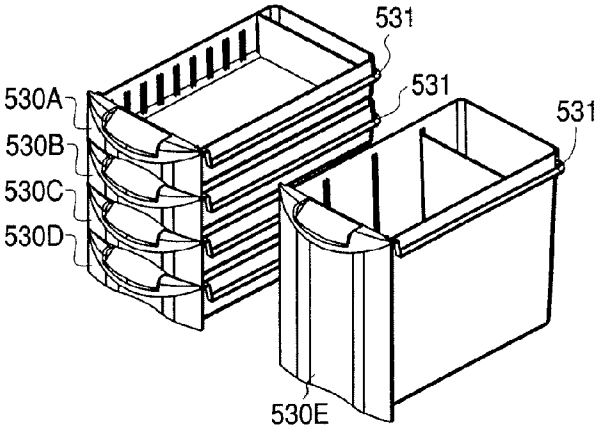
531
531
531
530A
530B
530C
530D
530E

Fig. 9A

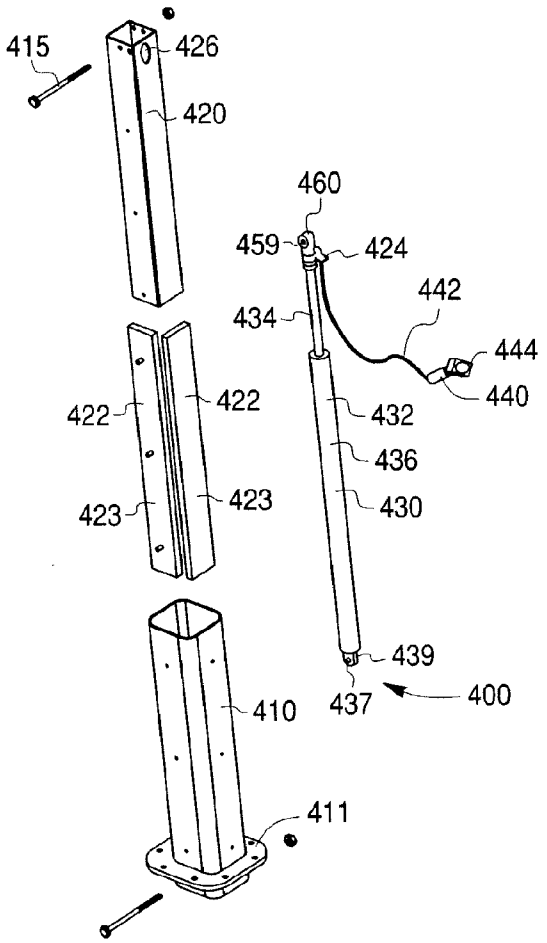
415
426
420
460
459
424
442
434
444
440
422
422
432
436
423
423
430
439
437
400
410
411

Fig. 9B

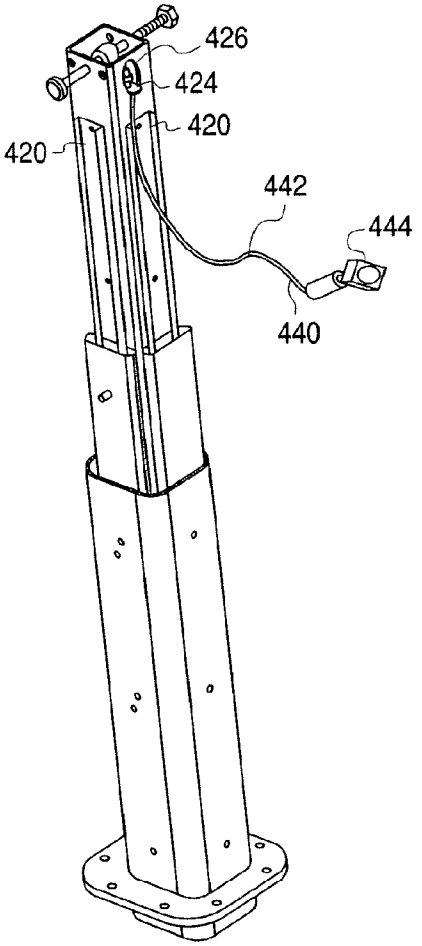
426
424
420
420
442
444
440

Fig. 10A

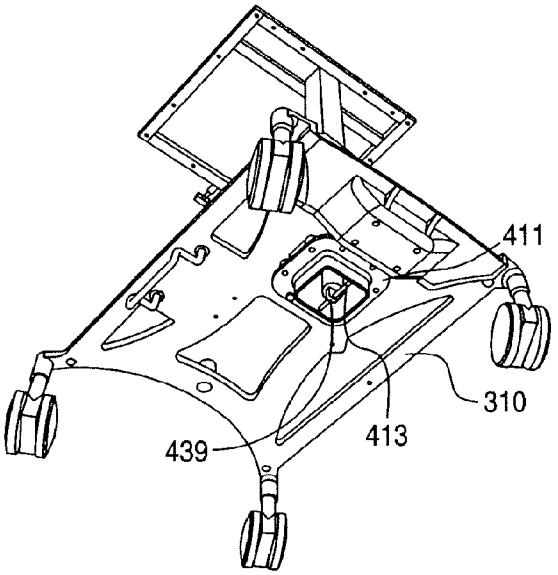

Fig. 10B

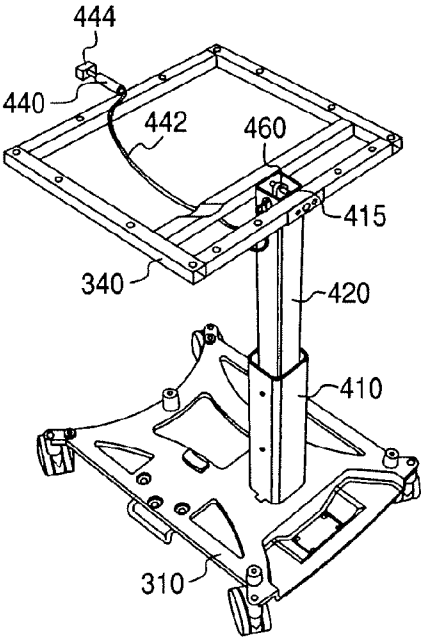

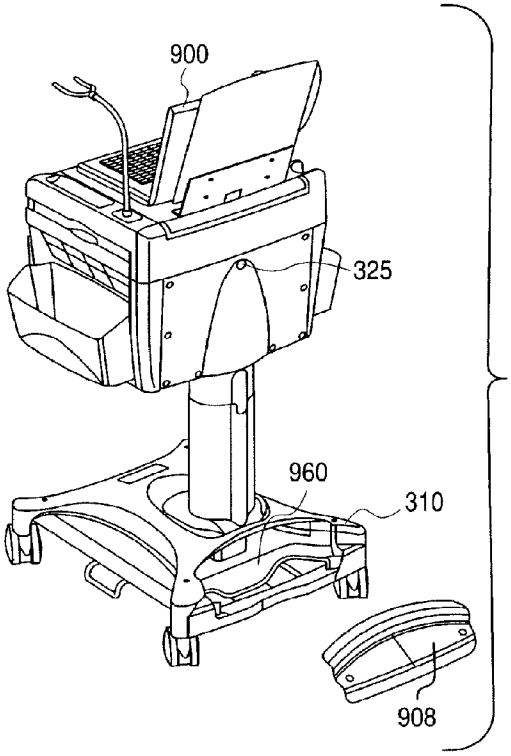

Fig. 11

Fig. 12

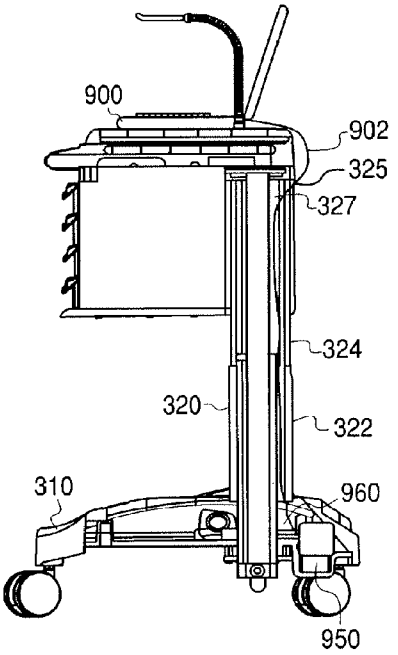

Fig. 13

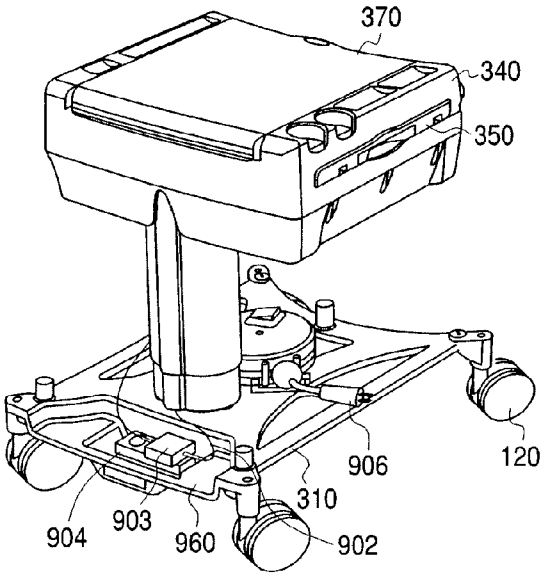

Fig. 14

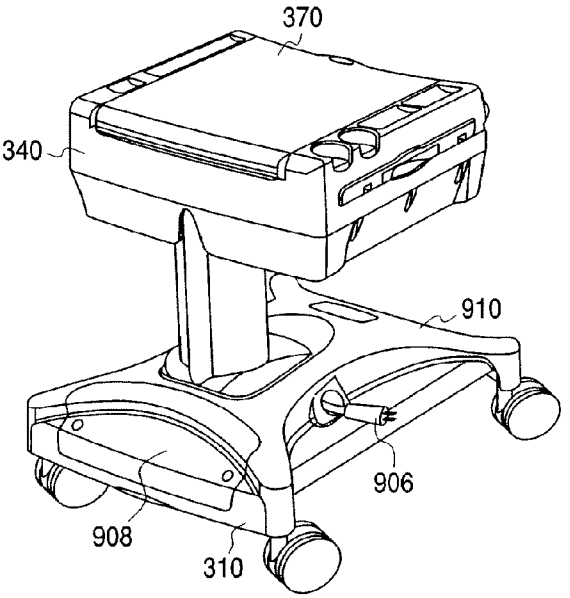

Fig. 15

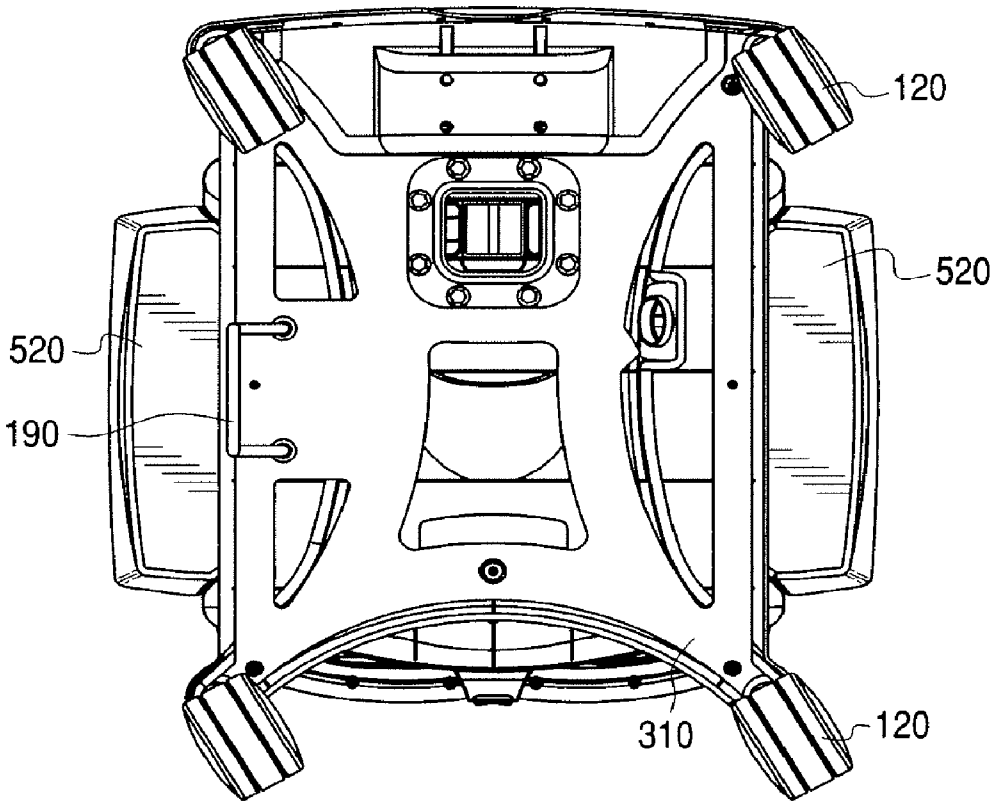

Fig. 16

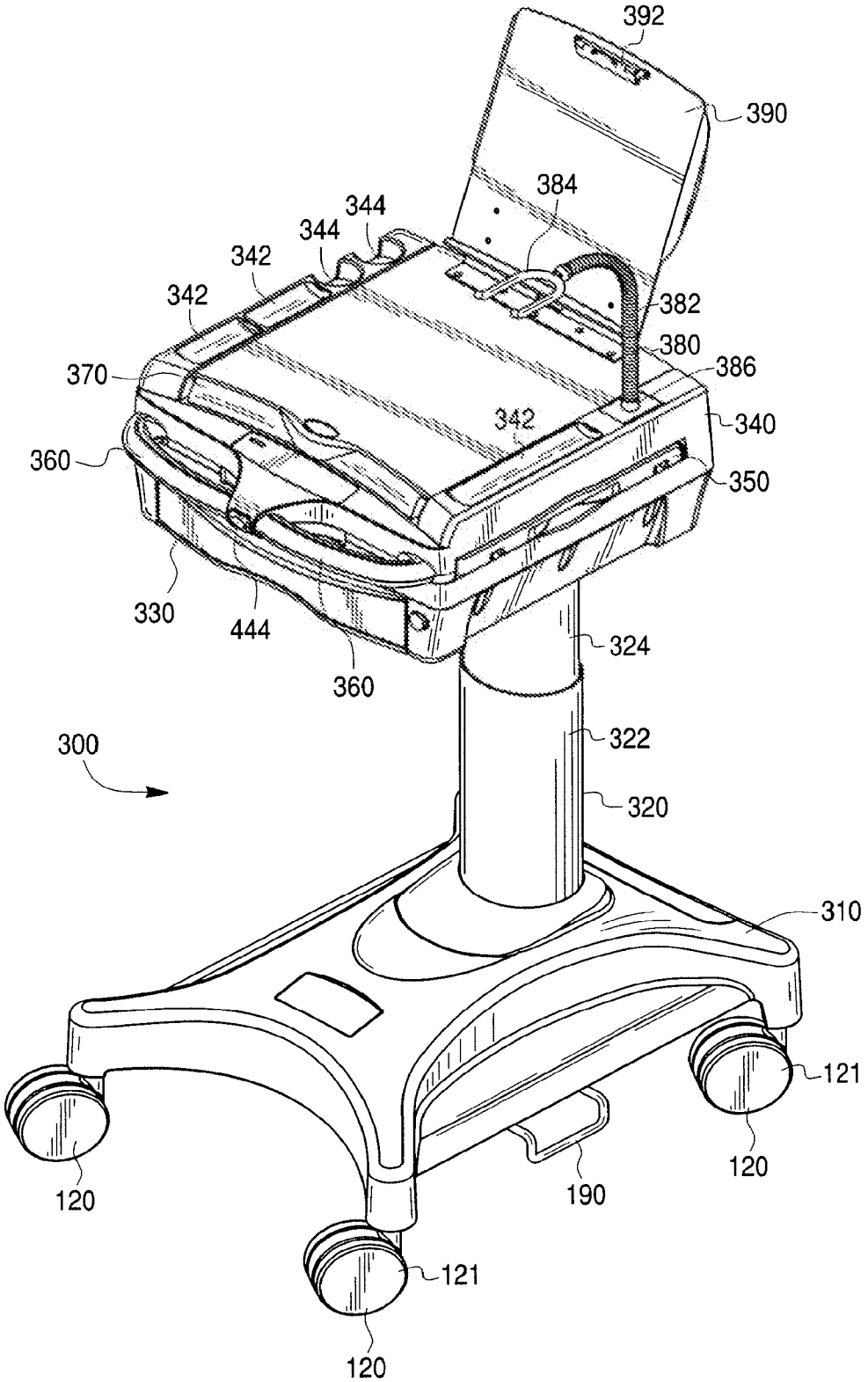
392
390
384
344
344
342
342
382
380
386
370
342
340
360
350
330
444
360
324
322
300
320
310
121
120
120
190
121
120

Fig. 17

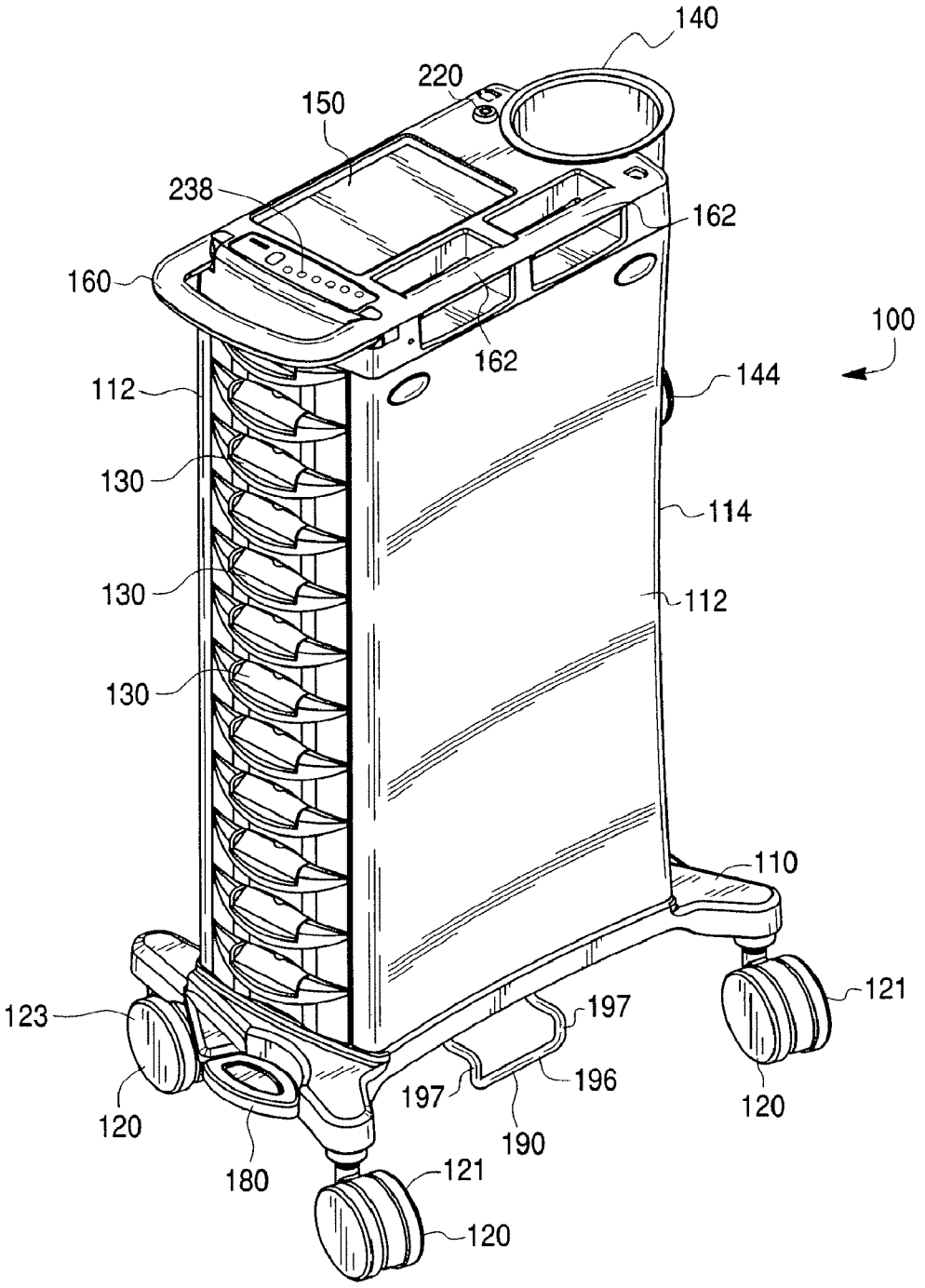
140
220
150
238
162
160
162
100
112
144
130
114
130
112
130
110
123
121
197
197
196
120
120
190
180
121
120

Fig. 18

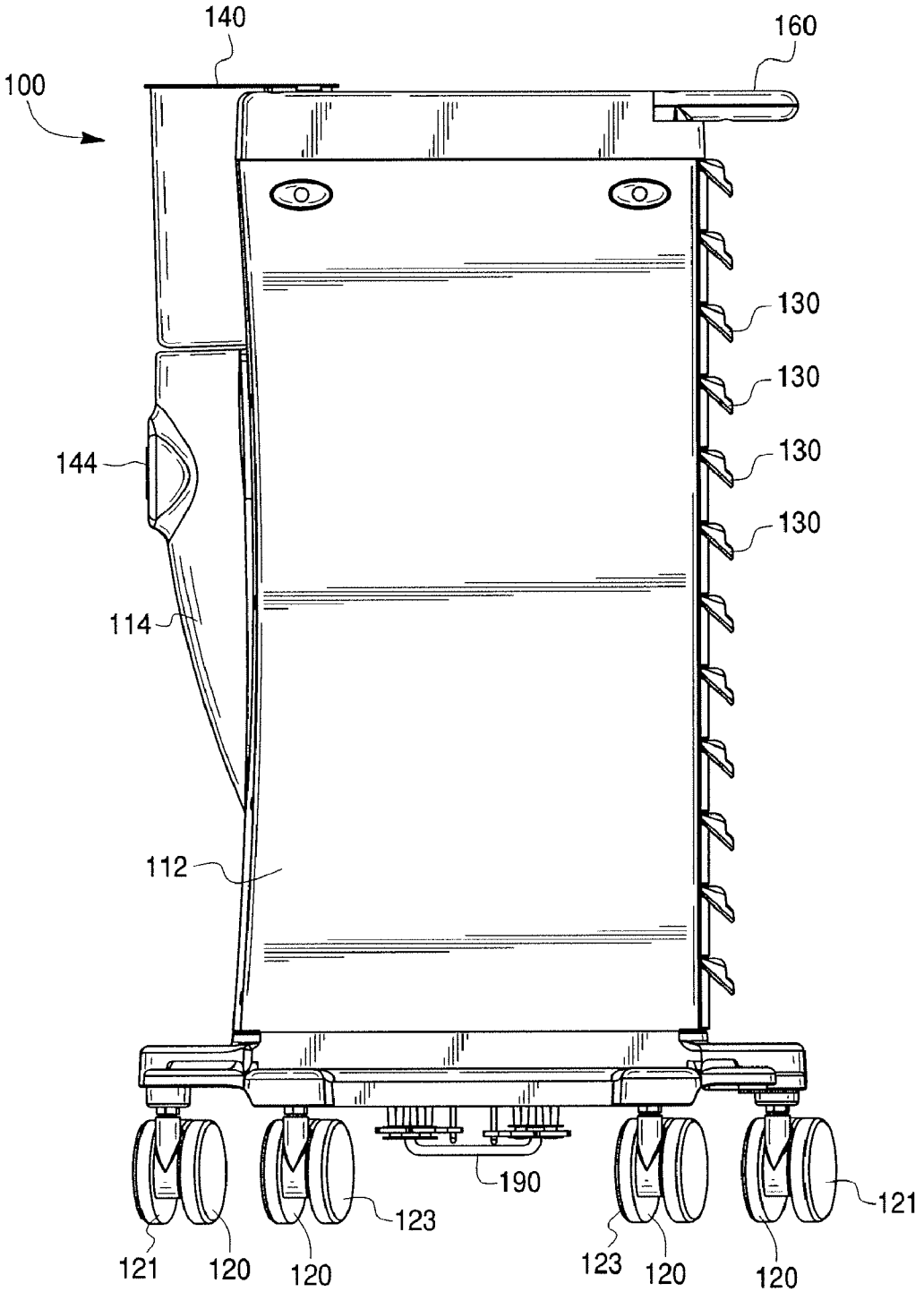
140
160
100
130
130
130
130
144
114
112
190
123
121
121
120
120
123
120
120

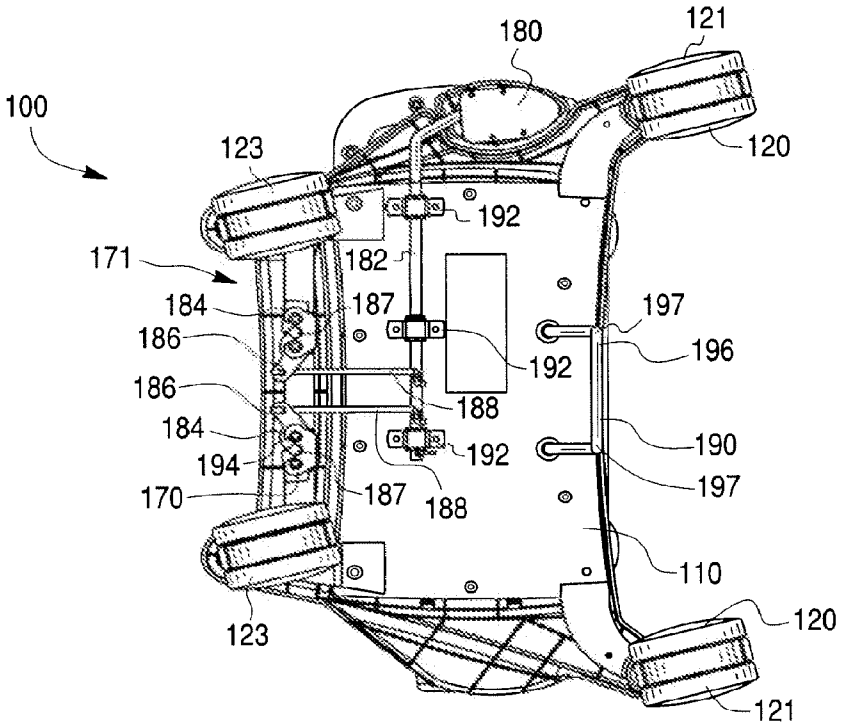
100
180
121
120
123
192
171
182
184
187
197
186
192
196
186
188
184
190
194
192
197
170
187
188
110
123
120
121

Fig. 19

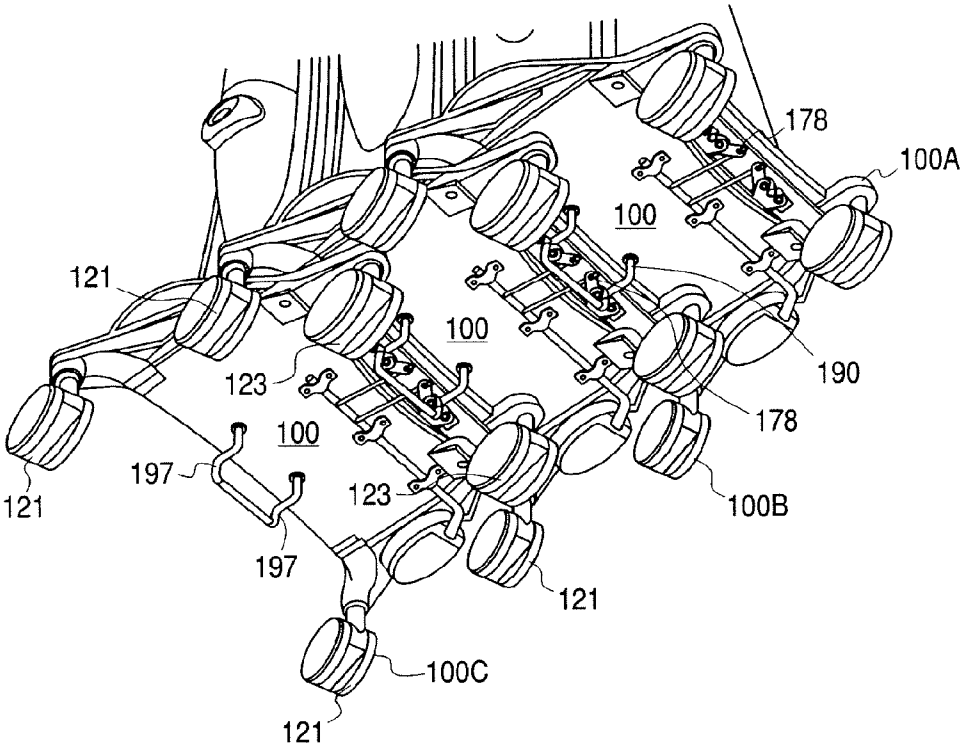
178
100A
100
121
100
123
190
178
100
197
123
100B
121
197
121
100C
121

Fig. 20

Fig. 21B

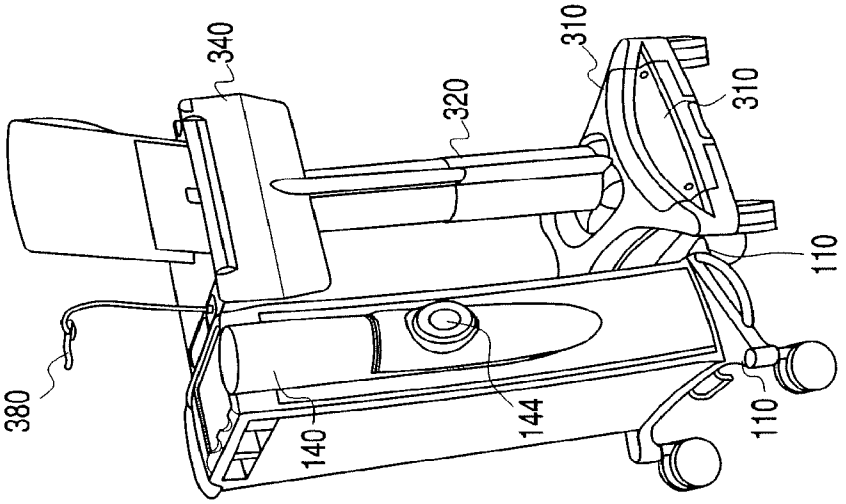

Fig. 21A

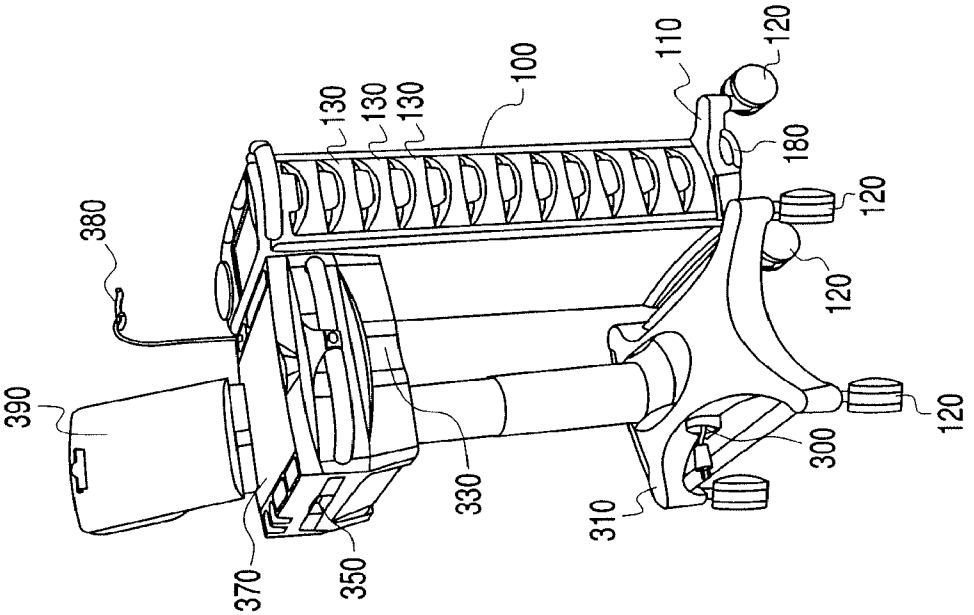

Fig. 22

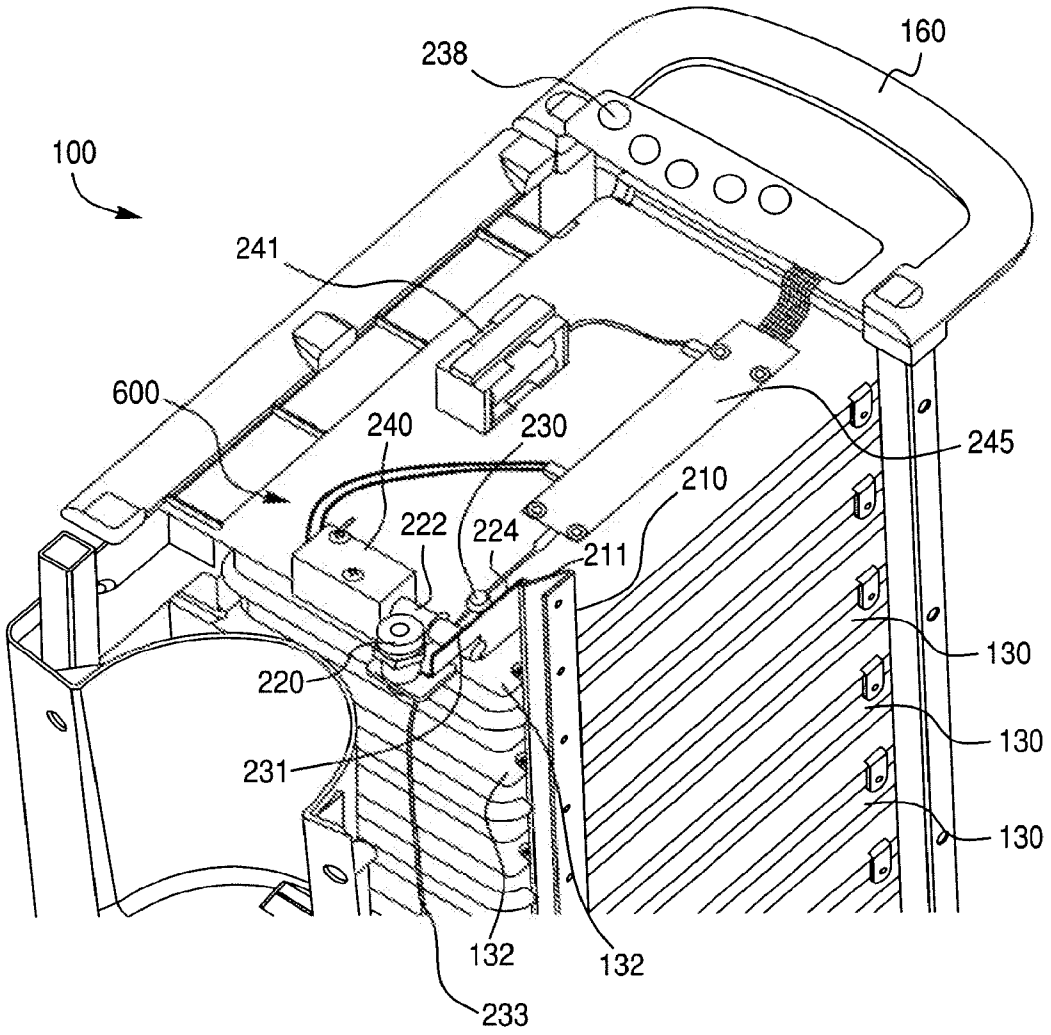
238
160
100
241
600
240
230
245
210
222
224
211
130
220
130
231
130
132
132
233

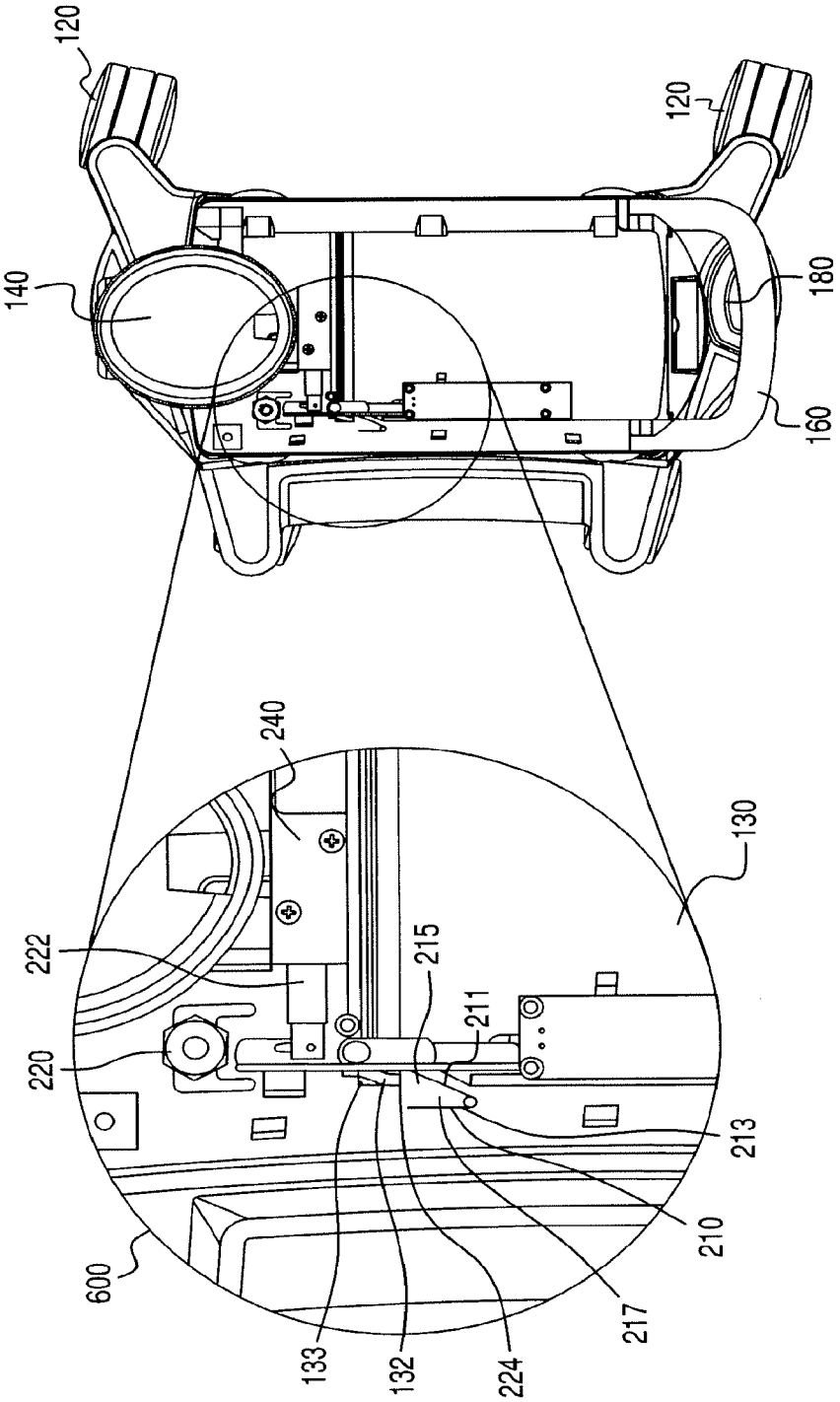

Fig. 23

Fig. 23A

Fig. 24

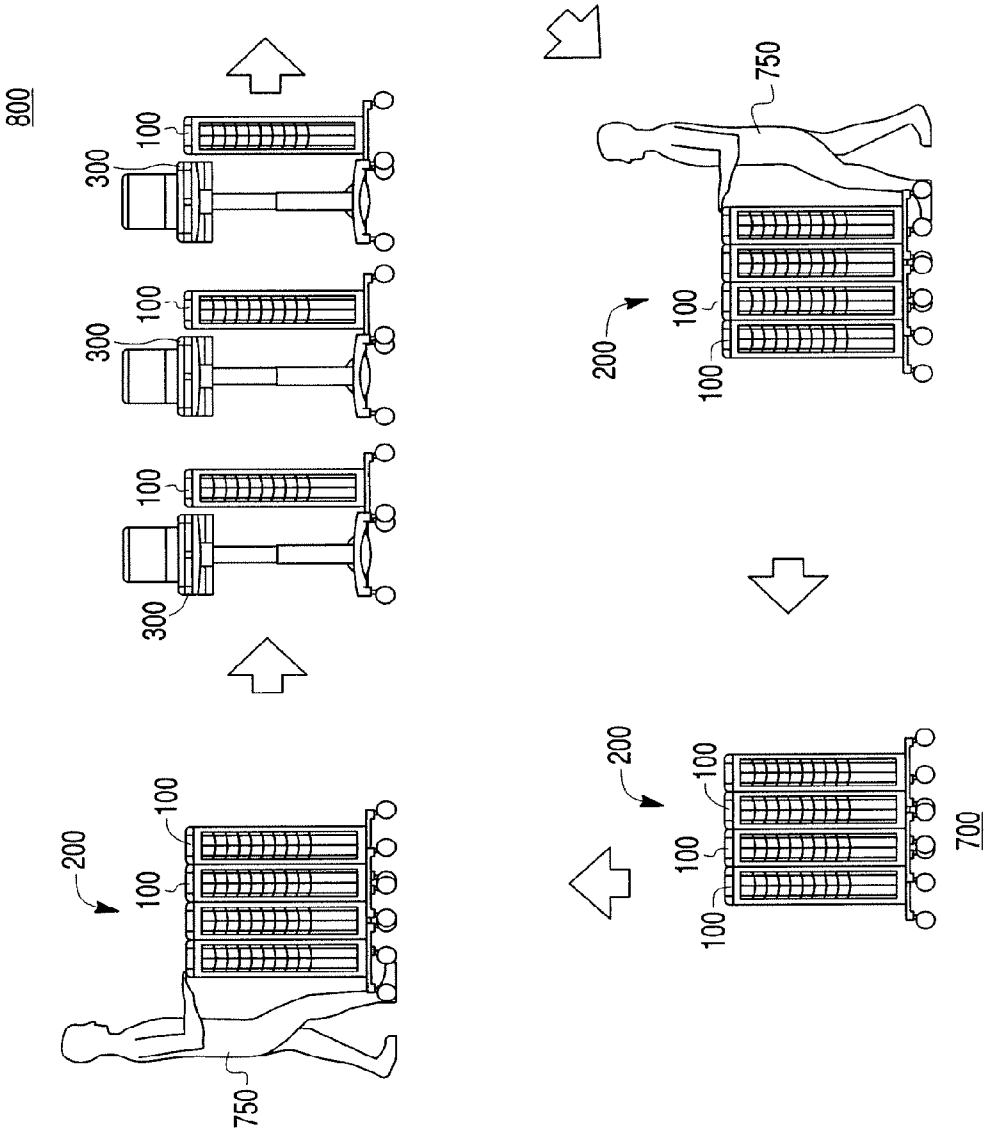
800
200
100
100
750
300
100
300
100
300
100
200
100
100
100
750
200
100
100
100
700

MEDICAL CART, MEDICATION MODULE, HEIGHT ADJUSTMENT MECHANISM, AND METHOD OF MEDICATION TRANSPORT

CROSS-REFERENCE TO RELATED APPLICATIONS

The present application is a continuation of U.S. application Ser. No. 12/550,771 (filed Aug. 31, 2009) which is a divisional of U.S. application Ser. No. 12/193,346 (filed Aug. 18, 2008) which is a continuation of U.S. application Ser. No. 10/783,030 (filed Feb. 23, 2004), and also claims priority to U.S. Provisional Application Nos. 60/448,920 (filed Feb. 24, 2003), 60/484,658 (filed Jul. 7, 2003), 60/518,649 (filed Nov. 12, 2003) and 60/532,900 (filed Dec. 30, 2003) and to U.S. Design Patent Application Nos. 29/196,712, 29/196,713, 29/196,714 (all filed Jan. 2, 2004). The foregoing applications are incorporated by reference herein in their entirety.

BACKGROUND OF THE INVENTION

The Institute of Medicine estimates that medical error is responsible for roughly 98,000 deaths annually, making it the seventh leading cause of death in the U.S. Accordingly, reducing the likelihood of error is an important issue not only for hospitals and doctors, but for society as a whole.

To alleviate some of these concerns, some hospitals provide nurses with medical carts on which a networked laptop computer facilitates the use of Electronic Medical Administration Records ("EMAR"). EMAR is an electronic record of medications and services administered by a healthcare professional through patient and medication identification via bar coding. When admitted into a hospital, the patient receives a bar coded wrist band for identification purposes. Also, healthcare professionals within the pharmacy bar code all the medications to be administered to the patients. Documentation of medications given at the point-of-care has reduced the number of errors by ensuring that the right patient is receiving the proper medication at the correct time. The EMAR software alerts the nurse if there is a discrepancy anytime during the medication administration process.

Unfortunately, however, these medical carts have proven unsatisfactory for a number of reasons. For example, the carts are not ergonomically designed. The average age of a nurse is 47 and roughly 83% of nurses report suffering chronic back pain. In addition, the existing EMAR carts suffer from a relative lack of work surface, lack of an area to dispose of refuse, bad placement of medication drawers, lack of storage space, and relative inability to be usefully raised and lowered to enable the nurse to work when either standing or sitting.

In many hospital environments, a nurse must walk to a central location (e.g., a pyxis machine) at which medication is handled to obtain medication for a particular patient. Often, to avoid giving the wrong medication to a patient, the nurse only carries one patient's medication at a time. This control, however, does not preclude the potential for the medication to be given to the wrong patient such as, for example, if the nurse is sidetracked and asks another nurse to administer the medication.

In addition to the above-mentioned concerns, when one takes into account the number of patients which a nurse must handle, the result is that the nurse must spend a considerable amount of time walking between the central location and each patient's bedside. This problem is exacerbated in some situations in which the central location is located a significant distance from one or more of the patients for which the nurse is responsible. Moreover, the cost associated with paying

nurses to continuously travel to and from various medication locations may be relatively insignificant at the level of a particular nurse but is quite significant to the medical industry as a whole.

What is needed, therefore, is an apparatus and a methodology by which medical error may be reduced and by which the amount of time a nurse spends obtaining and researching medication may be reduced, without compromising safety.

SUMMARY OF THE INVENTION

An aspect of the present invention relates to a cart including a work platform having a work surface and at least one compartment, a base, and a height adjustment mechanism for adjusting the height of the work platform relative to the base. The compartment can be a drawer. The work platform can accommodate drawers of different sizes. Preferably the compartment is configured to be unlocked via a keyless entry system.

The work platform can include a laptop platform that can be moved in at least one of a forward and a rearward direction. The work platform also can include a work surface that can be moved in at least one of a leftward and rightward direction. The work platform also can include a barcode scanner holder.

The cart can include a plurality of rolling members connected to the base. The work platform can include sidewalls and the rolling members can be disposed on the base outside of the sidewalls.

Another aspect of the present invention includes a cart system comprising a first cart and a second cart. The first cart can include at least one compartment and a base having rolling members to permit movement of the first cart. The second cart can include a plurality of compartments and a base having rolling members to permit movement of the second cart. The first and second cart can include linking structure that permits the first and second carts to be connected together for movement.

The first cart can include a work platform having a work surface and that houses the at least one compartment. The first cart can include a plurality of compartments.

Preferably the base of the first cart is configured to nest with the base of the second cart. The second cart can include a housing for supporting the plurality of compartments and the rolling members can be disposed on the base outside of the sidewalls.

Another aspect of the present invention relates to a method of medication transport. The method can include the steps of loading, at a first location, medication into first and second carts, connecting the first and second carts to form a cart train, moving the cart train to a second location when loaded with medication, separating the first and second carts after moving the cart train to the second location, moving the first cart from the second location to a third location, removing medication from the at least one cart at the third location, and returning the first and second carts to the first location.

Another aspect of the present invention relates to a method of medication transport comprising the steps of loading, at a first location, medication into a compartment(s) in a medication module(s), moving the medication module to a second location, transferring medication from the medication module to a medical cart, and administering medicine from the medical cart to a patient.

Another aspect of the present invention relates to a method of medication transport comprising the steps of loading, at a first location, medication into a compartment(s) in a medication module(s), moving the medication module to a second location, exchanging the compartments of the medication

module(s) with the compartments of a medical cart(s) at the second location, returning the medication module(s) having the compartments of the medical cart(s) therein to the first location for refilling while the medical cart(s) having the compartments of the medication module(s) therein are being taken to patients.

These and other features, aspects, and advantages of the present invention will become more apparent from the following description, appended claims, and accompanying exemplary embodiments shown in the drawings.

BRIEF DESCRIPTION OF THE DRAWINGS

FIG. **1** is a perspective view of a first embodiment of a medical cart according to the present invention;

FIGS. **2**A and **2**B are perspective views of a slidable laptop computer surface of the medical cart of FIG. **1**, the laptop surface being moveable forward (FIG. **2**A) and rearward (FIG. **2**B);

FIGS. **3**A and **3**B are top and bottom exploded perspective views of three panels of a sliding platform of the medical cart of FIG. **1**;

FIG. **3**C is an enlarged view of a connection mechanism of the sliding platform of FIGS. **3**A and **3**B

FIGS. **4**A and **4**B are top plan views of the assembled sliding platform in which the platform has been pulled out to the right (FIG. **4**A) and to the left (FIG. **4**B);

FIGS. **5**A-**5**C are close-up views of a barcode scanner and barcode scanner holder of the medical cart of FIG. **1**;

FIGS. **6**A-**6**C are perspective views of a clipboard of the medical cart of FIG. **1**;

FIG. **7** is a perspective view of a work platform of the medical cart of FIG. **1** without compartments;

FIG. **8** is a perspective view of different sized compartments configured to be inserted into the medical cart of FIG. **1**;

FIG. **9**A is an exploded view of parts of a height adjustment mechanism of the medical cart of FIG. **1**;

FIG. **9**B is a perspective view of the height adjustment mechanism of FIG. **9**A in assembled form;

FIGS. **10**A and **10**B are bottom and top perspective views of the height adjustment mechanism of FIGS. **9**A and **9**B being connected to the medical cart of FIG. **1**;

FIG. **11** is a rear perspective view of the medical cart of FIG. **1** having a laptop computer thereon and showing a hatch being removed;

FIG. **12** is cross-sectional side view of the medical cart of FIG. **1**;

FIG. **13** is a rear perspective view of the medical cart of FIG. **1** having both a hatch and a base cover removed;

FIG. **14** is a rear perspective view of the medical cart of FIG. **1** showing a retractable power cord;

FIG. **15** is an underside plan view of the medical cart of FIG. **1** showing a first locking mechanism;

FIG. **16** is a perspective view of a second embodiment of a medical cart according to the present invention;

FIG. **17** is a perspective view of a first embodiment of a medication module according to the present invention;

FIG. **18** is a side plan view of the medication module of FIG. **17**;

FIG. **19** is an underside plan view of the medication module of FIG. **17** showing first and second locking mechanisms;

FIG. **20** is an underside perspective view of a plurality of medication modules of the type shown in FIG. **17** releaseably engaged to form a train;

FIGS. **21**A and **21**B are front and back perspective views of a medical cart of the type shown in FIG. **16** releaseably engaged with a medication module of the type shown in FIG. **17**;

FIG. **22** is a breakaway perspective view of the medication module of FIG. **17** showing a portion of a keyless entry system;

FIGS. **23** and **23**A show a cross-sectional top view of the medication module of FIG. **17** showing a portion of a keyless entry system, and an enlarged view of a portion thereof, respectively; and

FIG. **24** is a diagram of steps for an embodiment of a method of medication transport according to the present invention, which can be performed using a plurality of medication modules of the type shown in FIG. **17** and a plurality of medical carts of the types shown in FIGS. **1** and **16**.

DETAILED DESCRIPTION

Presently preferred embodiments of the invention are illustrated in the drawings. An effort has been made to use the same or like reference numbers throughout the drawings to refer to the same or like parts.

A first embodiment of a medical cart **500** is shown in FIGS. **1**-**15**. With respect to FIG. **1**, it can be seen that the medical cart **500** includes a work platform **340**, a support mechanism **320** that supports and adjusts the height of the work platform **340**, and a base **310**.

The work platform **340** can include a bi-directional laptop platform **370**, a bi-directional work surface **350**, an adjustable barcode scanner holder **380**, an adjustable clipboard **390**, one or more lockable compartments **530**, a plurality of top bins **342**, removable side bins **520**, cup holders **344**, and/or a keypad **238**. Because each of these items is provided on the work platform **340**, a user can ergonomically access each of these items as the work platform **340** is raised or lowered.

The laptop platform **370** can be configured to support, for example, a laptop computer **900** (shown in FIGS. **6**A and **7**). Conventional structure can be provided on the laptop platform **370** to hold the laptop computer in place. The laptop platform **370** can have an arcuate front face **376** at a front portion. The arcuate front face **376** may be designed to correspond to the torso of a user for ergonomic reasons.

The laptop platform **370** can be locked in a central position (FIG. **1**) or adjusted ergonomically to a forward (FIG. **2**A) or rearward (FIG. **2**B) position. As an example of a use of the present invention, when a user lowers the work platform **340** to a low position and moves the laptop platform **370** to a forward position, the user can sit and the work platform **340** functions as a desk. A transfer structure **800** allows the laptop platform **370** to be moved between those positions. The transfer structure **800** can include stationary rails **372** mounted on body portions **802** of the work platform **340** and rails runners **373** mounted on the laptop platform **370**, as shown in FIGS. **2**A and **2**B.

Notches **374**, which include sloped surfaces **375** and cavities **377**, are formed along the rail runners **373**. The notches **374** are configured to engage posts **371** formed along the stationary rails **372**. When the laptop platform **370** is moved by the transfer structure **800**, the sloped surfaces **375** of the notches **374** are configured to engage the posts **371**. By continuing to push (or pull) the laptop platform **370**, the posts **371** will ride up the sloped surfaces **375** and be deposited in cavities **377** in the notches **374**, thereby releasably immobilizing the laptop platform **370** with respect to the work platform **340**.

In one embodiment, one notch **374** may be provided on each of the rail runners **373** and corresponding posts **371** may be provided on the stationary rails **372**. As a result, the laptop platform **370** can be releaseably locked with respect to the work platform **340**. For example, as shown in FIGS. **2**A and **2**B, the posts **371** may be provided at rear portions of the stationary rails **372** and the notches **374** may be similarly provided at rear portions of the rail runners **373**. As a result, the laptop platform **370** will be releaseably locked with respect to the work platform **340** when in a central position shown in FIG. **1**.

In another embodiment, each of the stationary rails **372** may include at least three posts **371**, one provided at each end of the stationary rails **372** and one provided in a central portion of the stationary rails **372**. Correspondingly, each of the rail runners **373** may include three notches **374**, one provided at each end of the rails runners **373** and one provided in a central portion of the rail runners **373**. As a result, the surface **370** can be releasably immobilized with respect to the work platform **340** in a forward position (FIG. **2**A), a rearward position (FIG. **2**B), and a central position (FIG. **1**). In the forward position (FIG. **2**A), the rearmost notches **374** may be engaged with the forwardmost posts **371**. Similarly, in the rearward position (FIG. **2**B), the forwardmost notches **374** may be engaged with the rearmost posts **371**. Finally, in the central position, all three posts **371** on each stationary rail **372** may be engaged with the corresponding cavity **377** of the notches **374** of the rail runners **373**.

In another embodiment, the contact between the stationary rails **372** and the rail runners **373** can be frictionally enhanced such that the laptop platform **370** does not readily slide with respect to the work platform **340**. Rather, force (i.e., either pushing or pulling on the laptop platform **370**) will be required to overcome the frictional engagement between the stationary rails **372** and the rail runners **373**. As a result, the laptop platform **370** can be relatively fixed with respect to the work platform **340** at any location between a forwardmost position (FIG. **2**A) and a rearmost position (FIG. **2**B). In addition, one or more notches **374**/posts **371** may be combined with the frictional engagement between the stationary rails **372** and the rail runners **373**.

When the laptop platform **370** is pushed forward or rearward, it can expose a secondary work area **379** provided below the laptop platform **370**. The secondary work area **379** can be particularly sturdy. For example, it can be sturdy enough to enable a user to crush pills on the secondary work area **379**. In addition, the secondary work area **379** may be provided with a rim **378**. The rim **378** may reduce the likelihood of medication rolling off the medical cart **500** such as, for example, when a nurse tries to crush pills on the secondary work area **379**.

The bi-directional work surface **350** is shown in FIGS. **3**A, **3**B, **3**C, **4**A, and **4**B. As shown in FIGS. **3**A and **3**B, the bi-directional work surface **350** is positioned below the laptop platform **370**. The bi-directional work surface **350** is designed to move through a slot **343** in the side **341** of the work platform **340** in leftward and rightward directions to provide additional work space.

The work surface **350** can have channels **355**, **357** on its underside that engage ribs **358**, **359** formed on a plate **361** provided on a body **329** of the work platform **340**. The channels **355**, **357** are sized to receive the ribs **358**, **359** of the plate **361**. To prevent the bi-directional work surface **350** from sliding off the plate **361**, the channels **355**, **357** are closed at one end. As a result, when the second bi-directional work surface **350** slides to the right (as shown in FIG. **4**A), the channels **355** will slide along the ribs **358**, **359**. At one point, the channels **355** will slide past the ribs **359** on the left side of the plate **361** and will continue to slide along ribs **358** on the right side of the plate **361**. The second bi-directional work surface **350** will stop sliding, however, when the closed ends **363** of the channels **355** abut the inner ends of ribs **358**.

Similarly, when the second bi-directional work surface **350** slides to the left (as shown in FIG. **4**B), the channels **357** will slide along the ribs **358**, **359**. At one point, the channels **357** will slide past the ribs **358** on the right side of the plate **361** and will continue to slide along ribs **359** on the left side of the plate **361**. The second bi-directional work surface **350** will stop sliding, however, when the closed ends **365** of the channels **357** abut the inner ends of the ribs **359**.

When the bi-directional work surface **350** slides to the right or to the left, it slides in an arcuate path as a result of the channels **355**, **357** and ribs **358**, **369** (and the work surface **350**) being arcuate in shape. As a result, the second bi-directional work surface **350** is positioned closer to a user standing or sitting in front of the medical cart **500** when it is in an extended position.

A releaseable locking mechanism **1000** (shown best in FIG. **3**C) can be provided to hold the work surface **350** in a center position and to prevent it from sliding unintentionally. For example, as shown in FIGS. **3**B and **3**C, the second bi-directional work surface **350** may be provided with a projection **354** having sloped surfaces **347** and a nesting region **346**. Correspondingly, the plate **361** may be provided with a moveable pin **356** which may be, for example, a ball spring plunger that is spring-biased in upward direction (i.e., toward the work surface **350**). As a result, when the bi-directional work surface **350** is pushed into the work platform **340** (from either the left or the right), the moveable pin **356** will initially be pushed downward relative to the plate **361** by the sloped surface **347** of the projection **354**. Subsequently, the pin **356** will extend upwards into the nesting region **346** of the projection **354** and become frictionally engaged therein, thereby releasably locking the work surface **350** with respect to the work platform **340**. To move the work surface **350** out of the locked position, a force is applied to one of the exposed ends of the second bi-directional work surface **350** (to push the moveable pin **356** out of the nesting region **346** of the curved projection **354**), thereby enabling the bi-directional work surface **350** to slide freely along the ribs **358**, **359**.

Of course, the type of locking mechanism may be changed. Further, additional movable pins **356** may be provided in the plate **361** so as to enable the second bi-directional work surface **350** to be releasably locked in a corresponding number of positions.

As shown in FIGS. **5**A-**5**C, the adjustable barcode scanner holder **380** includes a flexible neck **382**, a base **386**, and a holder portion **384**. As a result of the neck **382** being flexible, the position of the holder portion **384** can be adjusted. For example, the vertical distance between the holder portion **384** and the laptop platform **370** can be adjusted. Specifically, the orientation of the holder portion **384** can be adjusted between, for example, a holding position in which a barcode scanner **385** is maintained in an upright holding position (FIG. **5**B) and a hands-free scanning position in which the holder portion **384** is adapted to hold an inverted (i.e., facing downward) barcode scanner **385**. By holding the scanner **385** in the inverted position, the holder portion **384** enables a user to pass documents between the scanner **385** and the laptop platform **370** (FIG. **5**C), without having to manually hold the scanner **385** (i.e., the scanner **385** may be operated in a hands-free manner). Moreover, the flexibility of the neck **382** enables the holder portion **384** to be adjusted to accommodate various barcode scanner sizes. In addition, the neck **382** is designed to

rotate at the base **386** thereof so that a user can turn the barcode scanner holder **380** away from the laptop platform **370**, if desired.

The barcode scanner **385** may be an integral part of the medical cart **500** or may be detachable therefrom. If the barcode scanner **385** is an integral component of the medical cart **500**, its power cord **387** may be inserted into a power cord passage **327** and connected to an electrical receptacle **904**, as later explained in detail with respect to FIGS. **11-13**. By way of contrast, the barcode scanner **385** may receive the power necessary to operate it from a laptop computer **900** when it is plugged into a USB port of the laptop computer **900**.

As shown in FIGS. **6**A-**6**C, the adjustable clipboard **390** is also designed to hold items in a hands-free manner. The clipboard **390** includes a clip **392** for holding items, such as paper. The clipboard **390** also includes conventional rails **394** attached to an L-shaped metal bracket **393** which connects the clipboard **390** to the laptop platform **370**, as shown best in FIG. **6**C. The clipboard **390** is designed to slide along the rails **394** to the left of the medical cart **500**. As a result, if a user is working on a laptop computer provided on the laptop platform **370**, the clipboard **390** can be moved from a central position (FIG. **6**B) to left of the laptop computer to allow the user to view the documents clipped to the clip **392**, as shown in FIGS. **6**A and **6**C. Of course, in other embodiments, the clipboard **390** could be designed to move to the right.

The plurality of compartments **530** face the user and move up and down with the work platform **340** (i.e., they remain in the same position relative to the laptop platform **370**), which are ergonomically desirable features. The compartments **530** may be provided with labeling portions **570**, which allow labels to be displayed on the compartments **530**. The plurality of compartments **530** enable a user (e.g., a nurse) to separately maintain medication for particular patients or for a particular room. For example, if a nurse is responsible for eight patients in a hospital ward, the medical cart **500** may be provided with a corresponding number of compartments **530** and the medication for each patient may be kept in a separate drawer assigned to that patient. As a result, the nurse could load the medication for all eight patients into eight separate drawers at one time (e.g., at the start of a medication pass) and at one location (e.g., at a pyxis machine), thereby reducing the need to travel to obtain the medication during the nurse's shift.

As shown in FIGS. **7** and **8**, the compartments **530** have projections **531** which are configured to slide in grooves **533** formed on the interior walls of the medical cart **500**. Although the compartments **530** in FIG. **1** are shown as having a generally uniform height, this is not required. In some embodiments the compartments **530** may have different heights.

For example, as shown in FIG. **7**, four short compartments **530**A-D can be removed, thereby exposing dividers **535** (which may be, for example, sheet metal). By removing the dividers **535** (e.g., by sliding them out of the medical cart **500**), as shown in the left side of the medical cart **500** in FIG. **7**, a tall space **537** may be created. As a result, a tall compartment **530**E, the height of which is substantially equal to height of the four short compartments **530**A-D when installed in the medical cart **500**, may be inserted into medication module **500** to substantially fill the space **537**. Moreover, the tall compartment **530**E will readily slide into the medical cart **500** by means of the projections **531** which are configured to slide into the grooves **533** previously occupied by the projections **531** of the upper short compartment **530**A. Thus, different size compartments **530** can be accommodated based on the desired application.

The compartments **530** may be lockable by means of a keyless entry system (the details of which are later described with respect to FIGS. **22** and **23**). Thus, the potential for unauthorized access to the compartments **530** while the nurse is caring for a particular patient is small.

The top bins **243** are provided to house items such as paperclips, pencils, etc. Similarly, the cup holders **344** are provided to secure a number of medicine cups used to pass out medications.

The removable side bins **520** can be provided to hold items, such as trash or medical equipment. The side bins **520** can be removably connected to the sides of the body **329** of the work platform **340** by conventional means, such as a hole and pin arrangement.

The work platform **340** may be raised and lowered by means of the support mechanism **320**. This provides a sitting or standing user with easy access to the work surface **350** and its associated components (e.g., laptop platform **370**, work surface **350**, compartments **530**, etc.). The support mechanism **320** allows the user to adjust the position of the work platform **340** to a comfortable position, regardless of whether the user is sitting or standing. The support mechanism **320** comprises two telescoping portions **322**, **324** (shown more clearly in the embodiment shown in FIG. **16**) and height adjustment mechanism **400** (shown in FIGS. **9**A and **9**B). The height adjustment mechanism **400** enables a standing user or a sitting user to ergonomically raise and lower the work platform **340**.

The height adjustment mechanism **400** includes an outer casing **410**, a telescoping inner casing **420**, and a driver **430**. Preferably, two or more drawer slides **422** are provided between the inner casing **420** and the outer casing **410**. Although two drawer slides **422** may be used (on opposite sides of the inner casing **420**), it is preferable to use at least three drawer slides **422**, to prevent (or at least greatly inhibit) a binding action from being applied to the height adjustment mechanism **400** by means of a cantilevered force being applied thereto.

The drawer slides **422** may be, for example, conventional drawer rails formed of stationary drawer rails **423** and corresponding rail runners **425**. If the drawer slides **422** are conventional drawer rails, one side of the drawer slides **422** (e.g., the rail runners **425**) may be fixed to outer sides of the inner casing **420** and the corresponding side of the drawer slides **422** (e.g., the stationary drawer rails **423**) may be fixed to inner sides the outer casing **420**. Further, the stationary drawer rails **423** may be provided with ball bearings to facilitate movement of the rail runner **425**. An upper end of one side of the inner casing **420** is provided with an engagement mechanism **426**. As shown, the engagement mechanism may be in the form of a window in the side of the casing **420**.

The driver **430** includes a gas driven piston **432** which, in turn, includes a body portion **436** and a telescoping strut **434**. The driver **430** is controlled by an actuator **440** to which is connected by a connector **442**.

As shown in FIG. **10**A, a base **411** of the outer casing **410** is affixed to the base **310** of the medical cart **500** by a plurality of bolts through the base **411**. A bolt **413** passes through a hole **437** in a connection portion **439** of the body portion **436** of the piston **432**, thereby immobilizing both the outer casing **410** and the piston **432**. In addition, as shown in FIG. **10**B, the inner casing **420** and the telescoping strut **434** are affixed to work platform **340** by an upper bolt **415** which passes through the inner casing **420** and through a hole **459** in a connection portion **460** of the telescoping strut **434**. As a result, when the work platform **340** is raised or lowered, the strut **434** and the inner casing **420** are correspondingly raised or lowered.

As shown in FIG. **10**B, the actuator **440** may be provided in a front portion of the medical cart **500**. Moreover, a button **444** of the actuator **440** may be provided in the handle **360** of the medical cart **500**, as shown in FIG. **1**. To lower the work platform **340**, the button **444** is pushed as a user pushes down on work platform **340** thereby causing the gas driven piston **432** to expel air. As a result, the telescoping strut **434** is withdrawn vertically into the body portion **436** of the piston **432**. As the telescoping strut **434** moves downward into the body portion **436**, the work platform **340** which is affixed to the telescoping strut **434** also moves downward. In turn, the work platform **340** forces the connection portion **460** and the inner casing **420** to move downward. If the button **444** is released while the work platform **340** is being lowered, the work platform **340** will be releaseably locked at the height at which the button **444** is released. As a result, the work platform **340** can be releaseably locked at any position between a lowest position (at which the telescoping strut **434** is maximally provided in the body portion **436** of the piston **432**) and a highest position (at which the inner casing **420** is driven upward to a maximum distance by the telescoping strut **434** of the piston **432**).

By way of contrast, to raise the work platform **340**, a user merely needs to push button **444** and lift upward on the work platform **340**. As the work platform **340** is light in weight, it will readily move upward. Moreover, in the process, the gas driven piston **432** will intake air, thereby enabling the work platform **340** to remain at the raised level, i.e., when the platform **340** is raised gas will be sucked into the piston **340** and will not be readily expellable until the button **444** is depressed. In other words, similar to the process of lowering the work platform **340**, when the work platform **340** is raised it may be releaseably locked at any position between the lowest position and the height position by releasing the button **444**. As a result, each component of the work platform **340** (including the bi-directional laptop platform **370** and the compartments **530**) is ergonomically available to a user when sitting or standing.

In addition, as shown in FIGS. **12** and **13**, the medical cart can include a power cord passage **327** that enables a power cord **902** of a laptop computer **900** (or other device) on the laptop platform **370** to be electrically connected to an electrical receptacle **904** provided in the base **310**. The electrical receptacle **904** can be connected, for example to a wall outlet via a retractable cord **906**, as later described. Preferably, the passage **327** includes an access hole **325** in the work platform **340** and extends through the telescoping portions **322**, **324**. The passage **327** terminates in a well **960** in the base **310** where the electrical connection can occur. This permits the point of connection to the electrical receptacle **904** to be enclosed.

As shown in FIG. **13**, the well **960** in the base **310** houses the electrical receptacle **904**, a retractable cord **906**, and a hatch **908** that provides access to the well **960** so that power cords **387**, **902** can be plugged into the electrical receptacle **904**. The retractable cord **906** can be plugged into an external wall outlet to recharge the battery internal to the laptop computer **900** and/or a battery-powered solenoid **240** in the keyless entry system (later described in detail). The hatch **908** works in conjunction with a cover plate **910** to enclose the base **310** including the well **960**, thereby encapsulating the components provided in the base **310** and shielding them from the environment.

The base **310**, which is moveable by means of rolling members **120** (e.g., casters), is ergonomically shaped to provide stability. The base **310** is designed to provide stability by having the rolling members **120** at corners which are outside of the footprint of the work platform **340**. Moreover, the rolling members **120** are spaced-apart to such a degree that two rolling members **123** of a medication module **100** can be located between two rolling members **121** of the base **310**, thereby enabling the medical cart **500** and the medication module **100** to nest together. Further, when the medical cart **500** is nested with a medication module **100**, it may be releaseably connected to the medication module **100** by means of a second locking mechanism **190** provided on an underside of the base **310** (shown in FIGS. **1** and **15**), also as later described in detail.

Another embodiment of a medical cart **300** is shown in FIG. **16**. In this embodiment, the removable side bins **520** of the previous cart **500** have been removed to facilitate joining the medical cart **300** with a medication module **100**. The medical cart **300**, like the medical cart **500** shown in FIG. **1**, also includes a second locking mechanism **190** which may be used to connect the medical cart **300** to a medication module **100**. In addition, the cart **300** contains fewer compartments **330** which may, like the compartments **530** of the medical cart **500** shown in FIG. **1**, be lockable by means of a keyless entry system or by a conventional key lock.

One embodiment of a medication module **100**, which may be referred to as a cart, is shown in FIGS. **17**-**23**. As shown in FIG. **17**, the medication module **100** includes a component body **111** having a plurality of lockable compartments **130** and which is supported by a base **110**. The medication module also may include a refuse container **140**, a depression work surface **150**, a retractable power cord **144** (shown best in FIGS. **18** and **21**B) which can be used to recharge a battery **241** of a keyless entry system **600** by means of a power cord **233** (as later described in detail), a front handle **160**, and a side handle **162**. The two handles **160**, **162** are provided so that the medication module can be pushed by a user standing in front of the compartments **130** or in front of the sidewall **112**.

The component body **111** includes two side walls **112** and a back wall **114**. The walls **112**, **114** support a plurality of compartments **130** which, for example, may be in the form of drawers. Although the compartments **130** are shown as having a generally uniform height, this is not required. Moreover, in some embodiments the compartments **130** may have different heights. As a result, a plurality of short compartments **130** may be replaced by a tall compartment **130** in the manner previously described with respect to the first medical cart **500** embodiment.

It is preferable to provide the user with the ability to lock the compartments **130**, of the medication module **100**. To reduce the likelihood of losing a key, to reduce the likelihood of having a key getting stuck (or worse broken) in a lock, and to eliminate the need for a separate lock for each compartment **130**, the compartments may be lockable by a keyless entry system **600**, as hereafter described with respect to FIGS. **22**, **23**, and **23**A.

The keyless entry system **600** includes a solenoid **240** (powered by a battery **241** which is electrically connected, by means of the power cord **233**, to the retractable power cord **144**), a printed circuit board ("PCB") **245**, a piston **222**, a spring-biased hinge **210** (which has an active side **211** and a stationary side **213**), a keypad **238**, and an actuating lever **224** which is connected to the piston **222** at a connection point **231** and which pivots around an axis of rotation defined by a pin **230**.

The hinge **210** can be, for example, a hinge conventionally known as a piano hinge. In a locked orientation, the active side **211** of the hinge **210** is provided in an engagement position **215** in which the active side **211** is positioned to engage a notch **132** formed on a compartment **130** (i.e., each

compartment **130** has a similar notch **132**), if a user attempts to withdraw the compartment **130**. In other words, as a result of the engagement between the active side **211** of the spring **210** and the notches **132** of the compartments **130**, the compartments **130** can not be readily withdrawn out of the medication module **100**.

To unlock the compartments **130**, a user first enters a security code using buttons of the keypad **238** (to verify access to the medication module **100**) and may, if required, then enter an unlock code on the keypad **238**. In response, the PCB **245** sends an unlock signal to the solenoid **240**. When the unlock signal is received by the PCB **245**, the solenoid **240** withdraws the piston **222**, thereby causing the end of actuating lever **224** in contact with the active side **211** of the spring **210** to swing outward on the pin **230**. As a result, the actuating lever **224** causes the active side **211** of the spring **210** to swing out of the engagement position **215** and into a disengagement position **217**. In other words, the active side **211** swings toward the stationary side **213** of the spring **210** so that the two sides **211**, **213** rest against each other. When the sides **211**, **213** of the spring **210** rest against each other, the notches **132** of the compartments **130** will no longer be inhibited by the active side **211** of the spring **210**. As a result, the compartments **130** may be readily removed from the medication module **100**.

The compartments **130** can be relocked by pressing a "lock" button (not labeled) on the keypad **238** or by entering a lock code on the keypad **238**; in either case, the PCB **245** will send a lock signal to the solenoid **240** instructing it to outwardly push the piston **222**, thereby causing the end of the actuating lever **224** in contact with the active side **211** of the spring **210** to swing inward on the pin **230**. As a result, the active side **211** of the spring **210** will swing back into the engagement position **215** by means of the spring-biased nature of the spring **210**. In addition, and as a safety means, a timer may be provided in the keypad **238**, PCB **245**, or in the solenoid **240** which will, when a timer count is satisfied, automatically instruct the piston **222** to be outwardly pushed, thereby causing the active side **211** of the spring **210** to retract into the engagement position **215**.

If a compartment **130** is removed when either a lock signal is sent to the solenoid **240** or when a timer count is satisfied (and the active side **211** of the spring **210** is provided in the engagement position **215**), the compartment **130** may be inserted into the medication module without entering an unlock code. Specifically, the notches **132** of the compartments **130** have sloped faces **133** thereon which, when the compartment **130** is pushed into the medication module **100**, will abut the active side **211** of the spring **210**. By continuing to push the compartment **130**, the sloped face **133** will cause the active side **211** of the spring **210** to collapse into the disengagement position **217**, i.e., the spring-bias of the spring **210** will be overcome. After the sloped face **133** passes the active side of the spring **210**, the active side **211** will snap back into the engagement position **215** (by means of the spring-bias), thereby locking the compartment **130** in the medication module **100**.

An additional safety (and access) measure may be provided to address a situation in which the keypad **238** fails or the battery powered solenoid **240** loses power. Specifically, the compartments **130** may be unlocked manually by a hard (back-up) lock **220**, as shown in FIGS. **17** and **23**. By means of the hard lock **220**, a key can be used to manually rotate the actuating lever **224**, thereby pushing the active side **211** of the spring **210** or enabling it to swing outward under the force of the spring bias. In other words, the key can be used to move the active side **211** manually out of the engagement position **215** or to allow the active side **211** to swing (under the spring-biased force) into the engagement position **215**.

Although the keyless entry system **600** has been described with respect to the medication module **100**, the same system **600** can be applied to the compartments **330**, **530** of the medical carts **300**, **500**, respectively.

As a result of the ability to lock the compartments **130**, **330**, **530**, a nurse can use a medication module **100** and/or medical cart **300**, **500** to deliver medication to various patients, without worrying about unauthorized access to the compartments **130**, **330**, **530** while attending to a particular patient. Moreover, as a result of the keypad **238**, a nurse does not have to worry about losing a key, except for the hard lock key which may be kept at a central location.

The base **110**, which is supported by a plurality of rolling members **120** (e.g., casters), is designed to provide stability to the frame **111**, similar to the base **310** of the medical cart **300**, **500**. However, the base **110** is also designed such that the two of the rolling members **121** on one side of the module **100** are spaced apart farther than the two rolling members **123** on the other side of the module **100**. As a result, when two medication modules **100** (or a medication module **100** and a medical cart **300**, **500**) are brought together, the closer spaced rolling members **123** of one module **100** can fit between the farther spaced rolling members **121** of the other module **100** (or medical cart **300**, **500**), thereby enabling the modules **100** (or module **100** and medical cart **300**, **500**) to nest closer together to form a train **200**.

As a result of the ability to nest the bases **110** of a plurality of consecutive medication modules **100** in a train **200** (as later described in detail), the sidewalls **112**, **112** of adjacent modules **100** can be positioned in close proximity, thereby creating a small footprint for the train **200**. Similarly, as a result of the ability to nest the base **110** of a medication module **100** and the base **310** of a medical carts **300**, **500**, the compartments of the medication module **100** can be in close proximity to the work platform **340** of the medical cart **300**, **500**, thereby providing a user with easy access thereto.

To releaseably link the nested medication modules **100** (or a medication module **100** and nested a medical cart **300**, **500**), the base **110** of the medication module **100** is provided with a connection mechanism **171**. The connection mechanism **171** includes an actuator **180**, a first locking mechanism **170**, and a second locking mechanism **190**, as best shown in FIGS. **19** and **20**. The actuator **180**, which may be in the form of a foot pedal, includes a pivot rod **182**. When the foot pedal **180** is depressed, the pivot rod **182** is configured to rotate within rings **192** from a resting position to an active position, thereby activating the first locking mechanism **170**.

The first locking mechanism **170** includes beams **188**, cover plates **186** having sloped surfaces **194**, and catches **184** which comprise cavities **187**. When the rod **182** of the actuator **180** rotates, it pulls the beams **188** toward the center of the base **110**. In turn, the beams **188** cause the cover plates **186** to rotate toward the center of the base **110**. As the cover plates **186** rotate, they expose the cavities **187** in the catches **184**. Correspondingly, when the actuator **180** is released, the rod **182** rotates back to the resting position, thereby pushing the beams **188** away from the center of the base **110** and, in turn, rotating the cover plates **186** to enclose the cavities **187**.

When the cavities **187** are closed, they are designed to releaseably contain posts **197** of a second locking mechanism **190** of another medication module **100** or of a medical cart **300**, **500**. In addition, although the posts **197** may be provided separately on the base **110**, **310**, of the medication module **100** and medical carts **300**, **500**, they are preferably integrally formed by means of a crossbar **196**. Regardless of the design

of the posts **197**, they enable a medication module **100** to be joined to another medication module **100** to form a train **200**, as shown in FIG. **20**.

A train **200** of medication modules **100**A-**100**C can be formed by releaseably aligning the posts **197** of a second locking mechanism **190** of one medication module **100**A with the cover plates **186** of a first locking mechanism **170** of an adjacent medication module **100**B. By pushing the modules **100**A, **100**B toward each other, the posts **197** will slide along the sloped surfaces **194** of the cover plates **186**, thereby causing the cover plates **186** to rotate. As the cover plates **186** rotate, the cavities **187** will be exposed and the posts **197** will slide into them. After the posts **197** slide into the cavities **187**, the cover plates **186** will retract, thereby locking the posts **197** in the cavities. Of course, to add a third medication module **100**C, the posts **197** of the second medication module **100**B would be similarly inserted into the cavities **187** of the third medication module **100**C.

As the medical carts **300**, **500** also include second locking mechanisms **190**, the medication module can be releaseably joined with the medical carts **300**, **500**. For example, as shown in FIGS. **21**A and **21**B, the medication module **100** can be releaseably joined with the medical cart **300** shown in FIG. **16**. Of course, to release the medication module **100** from the medical carts **300**, **500**, a user (e.g., a nurse) would depress the foot pedal actuator **180** (shown in FIG. **21**A) to disengage the first locking mechanism **170** formed under the base **110** of the medication module **100** and the second locking mechanism **190** formed under the base **310** of the medical cart **300**, **500**.

As shown in FIG. **24**, a train **200** of medication modules **100** can be loaded with medication at a central location (e.g., pharmacy) **700**; the number of medication modules **100** may depend on the number of medical carts **300**, **500** that a hospital has on a particular floor on which the medication is to be delivered. A pharmacy technician can then drive the train **200** to a second location **800** at which the individual medication modules **100** can be separated from the train **200**. In addition, the medication modules **100** may be joined (by means of the first connection mechanism **171** thereon) to a medical cart **300**, **500** (by means of the second locking mechanism **190** thereon). One or more nurses **750** can then drive the separated medication modules **100** (with or without a medical cart **300**, **500** affixed thereto) to respective third locations (not shown) at which the nurse may administer medication (contained in the compartments **130**) to a distinct plurality of patients. When the nurse(s)'s rounds are complete, the empty medication modules **100** can be separated from attached medical carts **300**, **500** (if any) and rejoined to form a train **200** of medication modules **100**. The train **200** of medication modules **100** may then be returned to the central location **700** for refilling so that the method of medication transport may be repeated.

Similar to the aforementioned method, a modification may be made. Specifically, there may arise situations in which a nurse **750** does not want to push a combined medication module **100** and medical cart **300**, **500** but wants to enjoy the functionality of the medical cart **300**, **500**. In these situations, the nurse **750** may unlock the compartments **130** of medication module **100** at the second location **800** and remove one or more compartments **130**. The removed compartments **130** could then be exchanged with compartments **530** in the medical cart **500** or placed on the work platform of the medical cart **300** so that the medical cart **300**, **500** then contains the medications which the nurse **750** needs to deliver.

If the compartments **130** of the medication module **100** are exchanged with the compartments **530** of the medical cart **500**, the medication modules **100** containing the empty compartments **530** of the medical carts **500** may then be taken back to central location **700** for refilling while the original medication is being taken by nurses to the patients, so that the method of medication transport can be repeated.

Although the aforementioned describes embodiments of the invention, the invention is not so restricted. It will be apparent to those skilled in the art that various modifications and variations can be made to the disclosed embodiments of the present invention without departing from the scope or spirit of the invention. Accordingly, these other medication modules, medical carts, height adjustment mechanisms, keyless entry systems, and methods of medication transport are fully within the scope of the claimed invention. Therefore, it should be understood that the apparatuses and methods described herein are illustrative only and are not limiting upon the scope of the invention, which is indicated by the following claims.

What is claimed is:

1. A cart comprising:

a work platform including a work surface and at least one compartment for containing an item within the compartment, wherein the work surface is disposed above a top of the at least one compartment;

a base configured to be movable in at least a rearward direction; and

a height adjustment mechanism for adjusting a height of the work platform relative to the base, wherein the height adjustment mechanism is configured to releasably position the work platform at a plurality of heights, the height adjustment mechanism comprising:

a driver configured to releasably position the work platform; and

an actuator for controlling the driver,

wherein the base includes a portion projecting, relative to the height adjustment mechanism, in a forward direction that is substantially opposite to the rearward direction,

wherein the work platform includes a portion projecting, relative to the height adjustment mechanism, in the forward direction, wherein the compartment is disposed in the portion of the work platform projecting in the forward direction, and the compartment is configured to permit a user facing in the rearward direction to access the item within the compartment,

wherein the actuator is disposed above the compartment and on the portion of the work platform projecting in the forward direction, and

wherein the work surface is movable relative to a remainder of the work platform from an extended position to a non-extended position.

2. The cart of claim **1**, wherein the height adjustment mechanism comprises a first telescoping portion connected to the base, and a second telescoping portion connected to the work platform and configured to move relative to the first telescoping portion, and wherein the driver is configured to releasably position the second telescoping portion relative to the first telescoping portion.

3. The cart of claim **2**, wherein the first telescoping portion is a stationary outer casing, and the second telescoping portion is a movable inner casing.

4. The cart of claim **1**, wherein the work portion includes a handle on the portion of the work platform projecting in the forward direction, wherein the actuator is disposed on the handle.

5. The cart of claim **1**, wherein the actuator is disposed at a spaced vertical distance above the compartment.

6. The cart of claim 1, wherein the work platform further comprises a movable platform configured to move in at least one of the forward direction and the rearward direction.

7. The cart of claim 1, wherein the work surface is configured to move in at least one of a leftward direction and a rightward direction along an arcuate path that faces the forward direction.

8. The cart of claim 1, wherein the driver includes a piston that, in response to the user's actuation of the actuator, permits gas to flow out of the piston during lowering of the height of the work platform, and that, in response to the user's actuation of the actuator, permits gas to flow into the piston during increasing of the height of the work platform.

9. A cart comprising:

a work platform including a movable platform, a work surface movable relative to the movable platform, and at least one compartment for containing an item, wherein the movable platform and the work surface are disposed above a to of the at least one compartment;

a base configured to be movable in at least a rearward direction; and

a height adjustment mechanism for adjusting a height of the work platform relative to the base,

wherein the base includes a portion projecting, relative to the height adjustment mechanism, in a forward direction that is substantially opposite to the rearward direction,

wherein the work platform includes a portion projecting, relative to the height adjustment mechanism, in the forward direction, the at least one compartment is disposed in the portion of the work platform projecting in the forward direction, and the at least one compartment is configured to permit a user facing in the rearward direction to access the item within the at least one compartment,

wherein the movable platform can be moved in at least one of the forward and rearward directions,

wherein the work surface can be moved in at least one of a leftward direction and a rightward direction relative to the movable platform, and

wherein the work surface is configured to move in the at least one of the leftward direction and rightward direction through a slot in a side of the portion of the work platform projecting in the forward direction.

10. The cart of claim 9, wherein the work surface is configured to move in the at least one of the leftward and rightward directions along an arcuate path that faces the forward direction.

11. The cart of claim 9, wherein the work surface is configured to move in both the leftward direction through the slot and the rightward direction through another slot along an arcuate path that faces the forward direction.

12. The cart of claim 9, wherein the work platform is configured such that the work surface can be disposed below the movable platform.

13. The cart of claim 9, wherein the work platform is configured such that the movable platform can be moved in the at least one of the forward and rearward directions without moving the work surface.

14. The cart of claim 9, wherein the at least one compartment comprises a plurality of compartments.

15. The cart of claim 9, wherein the movable platform is a laptop platform.

16. A cart comprising:

a work platform including a movable platform, a work surface movable relative to the movable platform, and at least one compartment for containing an item;

a base configured to be movable in at least a rearward direction; and

a height adjustment mechanism for adjusting a height of the work platform relative to the base,

wherein the base includes a portion projecting, relative to the height adjustment mechanism, in a forward direction that is substantially opposite to the rearward direction,

wherein the work platform includes a portion projecting, relative to the height adjustment mechanism, in the forward direction, wherein the at least one compartment is disposed in the portion of the work platform projecting in the forward direction, and the at least one compartment is configured to permit a user facing in the rearward direction to access the item within the at least one compartment,

wherein the movable platform can be moved in at least one of the forward and rearward directions, and

wherein the work surface can be moved in at least one of a leftward direction and a rightward direction relative to the movable platform,

wherein the work platform includes a secondary work surface, and the work platform is configured such that both the secondary work surface and the movable platform are exposed when the movable platform moves in the at least one of the forward and rearward directions, and

wherein the secondary work surface and the movable platform are positioned above a top of the at least one compartment.

17. The cart of claim 16, wherein the work surface is configured to move in the at least one of the leftward direction and the rightward direction along an arcuate path that faces the forward direction.

18. The cart of claim 16, wherein the work surface is configured to move in both the leftward direction and the rightward direction.

19. The cart of claim 16, wherein the work platform is configured such that the work surface can be disposed below the movable platform.

20. The cart of claim 16, wherein the work platform is configured such that the movable platform can be moved in the at least one of the forward and rearward directions without moving the work surface.

21. The cart of claim 16, wherein the work platform is configured such that the secondary work surface can be positioned in vertical alignment with the movable platform.

22. The cart of claim 16, wherein the work platform is configured such that the secondary work surface can be disposed beneath the movable platform.

23. The cart of claim 16, wherein the at least one compartment comprises a plurality of compartments.

24. The cart of claim 16, wherein the movable platform is a laptop platform.

* * * * *