UNITED STATES DISTRICT COURT
FOR THE SOUTHERN DISTRICT OF MISSISSIPPI
EASTERN DIVISION

CAPSA SOLUTIONS LLC	)	
	)	
Plaintiff,	)	
	)	Case No.: 2:22-cv-00065-HSO-BWR
v.	)	
	)	
HOWARD INDUSTRIES, INC.	)	JURY TRIAL DEMANDED
	)	
	)	
Defendant.	)	

DEFENDANT HOWARD INDUSTRIES, INC.'S
PRELIMINARY CLAIM CONSTRUCTION BRIEF

TABLE OF CONTENTS

I. INTRODUCTION 1

II. TECHNOLOGICAL BACKGROUND 1

A. U.S. Patent Nos. 7,594,668 ("the '668 patent") and 8,215,650 ("the '650 patent") 1

B. U.S. Patent No. 8,109,527 ("the '527 patent") 2

C. U.S. Patent No. 9,039,016 ("the '016 patent") 3

III. SUMMARY OF LAW 4

IV. AGREED-UPON CONSTRUCTIONS 5

A. U.S. Patent No. D762,339 ("the '339 patent") 5

V. DISPUTED CONSTRUCTIONS 5

A. U.S. Patent Nos. 7,594,668 ("the '668 patent") and 8,215,650 ("the '650 patent") 5

1. "height adjustment mechanism" 5

2. "work platform" 7

3. "work surface" 10

4. "wherein the work surface is movable" 17

5. "movable platform" 19

6. "compartment(s)" 21

7. "at least one compartment" 23

8. "disposed above the compartment(s)" / "disposed above a top of the at least one compartment" 24

9. "driver" 26

10. "actuator"/"actuator for controlling the driver" 29

11. "drawer slides" 34

12. "wherein the height adjustment mechanism is configured to releasably lock the work platform at a plurality of heights" / "wherein the height adjustment mechanism is configured to releasably position the work platform at a plurality of heights" 35

B. U.S. Patent No. 8,109,527 38

1. "track" 38

2. "platform" 41

3. "arm" 42

4. "substantially coextensive" 45

C. U.S. Patent No. 9,039,016 46

1. "means for automatically adjusting a height of the platform" 46

VI. CONCLUSION 49

TABLE OF AUTHORITIES

Page(s)

Cases

3M Innovative Properties Co. v. Tredegar Corp.,
725 F.3d 1315 (Fed. Cir. 2013).....42

Advanced Display Sys., Inc. v. Kent State Univ.,
212 F.3d 1272 (Fed. Cir. 2000).....14, 37

AIA Eng'g Ltd. v. Magotteaux Int'l,
657 F.3d 1264 (Fed. Cir. 2011).....46

Amtel Corp. v. Info. Storage Devices, Inc.,
198 F.3d 1374, 1380 (Fed. Cir. 1999).....33

Augustine Med., Inc. v. Gaymar Indus., Inc.,
181 F.3d 1291 (Fed. Cir. 1999).....26

Bell Atl. Network Servs., Inc. v. Covad Commc'ns Grp., Inc.,
262 F.3d 1258 (Fed. Cir. 2001).....27

Biomedino, LLC v. Waters Techs. Corp.,
490 F.3d 946 (Fed. Cir. 2007).....32

BNJ Leasing, Inc. v. Portabull Fuel Serv., LLC,
No. 2:19-CV-156-KS-MTP, 2021 WL 1110299 (S.D. Miss. Mar. 23, 2021).....6

Cardiac Pacemakers, Inc. v. St. Jude Med., Inc.,
296 F.3d 1106 (Fed. Cir. 2002).....47, 48

CCS Fitness, Inc. v. Brunswick Corp.,
288 F.3d 1359, 1366 (Fed. Cir. 2002).....8

Cole v. Kimberly–Clark Corp.,
102 F.3d 524 (Fed. Cir. 1996).....29

Cordis Corp. v. Bos. Sci. Corp.,
658 F.3d 1347 (Fed. Cir. 2011).....26

C.R. Bard, Inc. v. U.S. Surgical Corp.
388 F.3d 858, 862 (Fed. Cir. 2004).....4

Deering Precision Instruments, L.L.C. v. Vector Distribution Sys., Inc.,
347 F.3d 1314 (Fed. Cir. 2003).....41, 45

Ekchian v. Home Depot, Inc.,
104 F.3d 1299 (Fed. Cir. 1997).....13, 20

Eon Corp. IP Holdings v. Silver Spring Networks,
815 F.3d 1314, 1320 (Fed. Cir. 2016).....33

Finisar Corp. v. DirecTV Grp., Inc.,
523 F.3d 1323 (Fed. Cir. 2008).....19

Greenberg v. Ethicon Endo–Surgery, Inc.,
91 F.3d 1580 (Fed. Cir. 1996).....30

Haemonetics Corp. v. Baxter Healthcare Corp.,
607 F.3d 776 (Fed. Cir. 2010).....25

Helmsderfer v. Bobrick Washroom Equip., Inc.,
527 F.3d 1379 (Fed. Cir. 2008).....8

Hill-Rom Services, Inc. v. Stryker Corp.,
755 F.3d 1367 (Fed. Cir. 2014).....23

Honeywell Int'l, Inc. v. ITT Indus., Inc.,
452 F.3d 1312 (Fed. Cir. 2006).....27

Kistler Instrumente AG. v. United States,
628 F.2d 1303 (Ct. Cl. 1980).....23

Lexion Med., LLC v. Northgate Techs., Inc.,
641 F.3d 1352 (Fed. Cir. 2011).....45

LizardTech, Inc. v. Earth Resource Mapping, Inc.,
424 F.3d 1336 (Fed. Cir. 2005).....16

Markman v. Westview Instruments, Inc.,
517 U.S. 370 (1996).....4

Markman v. Westview Instruments, Inc.,
52 F.3d 967 (Fed. Cir. 1995), *aff'd*, 517 U.S. 370 (1996).....4, 38

Med. Instrumentation & Diagnostics Corp. V. Elekta AB,
344 F.3d 1205, 1211 (Fed. Cir. 2003).....32

Nazomi Commc'ns, Inc. v. Arm Holdings, PLC,
403 F.3d 1364 (Fed. Cir. 2005).....39

NTP, Inc. v. Research in Motion, Ltd.,
418 F.3d 1282 (Fed. Cir. 2005).....25

Nystrom v. TREX Co., Inc.,
424 F.3d 1136, 1144–45 (Fed. Cir. 2005).....33

Omega Eng'g, Inc. v. Raytek Corp.,
334 F.3d 1314 (Fed. Cir. 2003).....23, 48

Phillips v. AWH Corp.,
415 F.3d 1303 (Fed. Cir. 2005) (en banc)..... *passim*

Rhine v. Casio, Inc.,
183 F.3d 1342 (Fed.Cir.1999).....23

Summit 6, LLC v. Samsung Elecs. Co.,
802 F.3d 1283, 1291 (Fed. Cir. 2015).....6

Tap. Pharm. Prods., Inc. v. Owl Pharms., LLC.,
419 F.3d 1346 (Fed. Cir. 2005).....18

Thorn EMI N. Am., Inc. v. Intel Corp.,
936 F. Supp. 1186 (D. Del. 1996), *aff'd sub nom. EMI Grp. N. Am., Inc. v. Intel Corp.*, 157 F.3d 887 (Fed. Cir. 1998).....41

Thorner v. Sony Computer Ent. Am. LLC,
669 F.3d 1362 (Fed. Cir. 2012).....7, 8, 41

Trustees of Columbia Univ. in City of New York v. Symantec Corp.,
811 F.3d 1359 (Fed. Cir. 2016).....15, 37

V-Formation, Inc. v. Benetton Grp. SpA,
401 F.3d 1307 (Fed. Cir. 2005).....45

Vitronics Corp. v. Conceptronic, Inc.,
90 F.3d 1576 (Fed. Cir. 1996).....4, 28, 49

Warner-Lambert Co. v. Apotex Corp.,
316 F.3d 1348 (Fed. Cir. 2003).....24

Welker Bearing Co. v, PHD, Inc.,
550 F.3d 1090 (Fed. Cir. 2008).....31

Williamson v. Citrix Online, LLC,
792 F.3d 1339 (Fed. Cir. 2015) (en banc).....29, 47

Z4 Techs., Inc. v. Microsoft Corp.,
507 F.3d 1340 (Fed. Cir. 2007).....23

Statutes

35 U.S.C. § 112(6)..... *passim*

TABLE OF EXHIBITS

Patents at Issue:

Exhibit	Patent
A	7,594,668
B	8,215,650
C	8,109,527
D	9,039,016
E	D762,339

Other Evidence:

Exhibit	Document
1	*Rubbermaid Inc. v. Ergotron, Inc.*, No. 3:12-cv-416, Memorandum of Decision and Order (W.D.N.C. March 11, 2014)
2	Provisional Application No. 60/484658
3	Provisional Application No. 60/518649
4	Provisional Application No. 60/448920
5	Excerpts of Prosecution History of U.S. 8,215,650 (Annotated)
6	Webster's Third New International Dictionary (2002)
7	The American Heritage College Dictionary, Third ed. (1997)
8	U.S. Patent No. 6,721,178 ("Clark")
9	The Oxford English Dictionary, Second ed. (1989)
10	Declaration of Mr. David Smith
11	Curriculum Vitae of Mr. David Smith
12	Merriam-Webster's Collegiate Dictionary, Eleventh ed. (2007)
13	Excerpts of Prosecution History of Application No. 10/783,030

All emphases added unless otherwise noted

I. INTRODUCTION

Defendant Howard Industries, Inc. ("Howard") submits this brief in support of its proposed claim constructions. Howard's constructions are consistent with the intrinsic record and the plain meaning of the construed terms. By contrast, Plaintiff Capsa Solutions LLC ("Capsa") attempts to impermissibly broaden the scope of the claims by proposing constructions that are inconsistent with the intrinsic record and the understanding of one of ordinary skill in the art. For at least the reasons described herein, Howard respectfully requests that the Court reject Capsa's attempts to confuse the record, and instead adopt Howard's proposed constructions.

II. TECHNOLOGICAL BACKGROUND

This case involves four utility patents and one design patent describing and depicting medical carts. *See, e.g.*, Ex. A, Abstract; Ex. B, Abstract; Ex. C, 1:10-11; Ex. D, 1:12-14; Ex. E, Figure 1. The carts may be used in a medical setting and may contain features that allow a user to adjust portions of the carts. *See, e.g.*, Ex. A, 2:11-14; Ex. B, 2:12-15; Ex. C, 1:27-45; Ex. D, 1:43-48.

A. U.S. Patent Nos. 7,594,668 ("the '668 patent") and 8,215,650 ("the '650 patent")

The '668 and '650 patents each describe the same medical cart. Ex. A, Abstract; Ex. B, Abstract. The '650 patent claims priority to the '668 patent and both patents share a common Specification and figures. Ex. B, 1:8-18. The patents describe a medical cart with a height adjustable work platform (340). Ex. A, 4:23-27. A height adjustment mechanism (400) enables a user to raise and lower the work platform (340). *Id.*, 8:25-28. The height adjustment mechanism (400) includes a driver (430) and an actuator (440) for controlling the driver. *Id.*, 8:52-55.

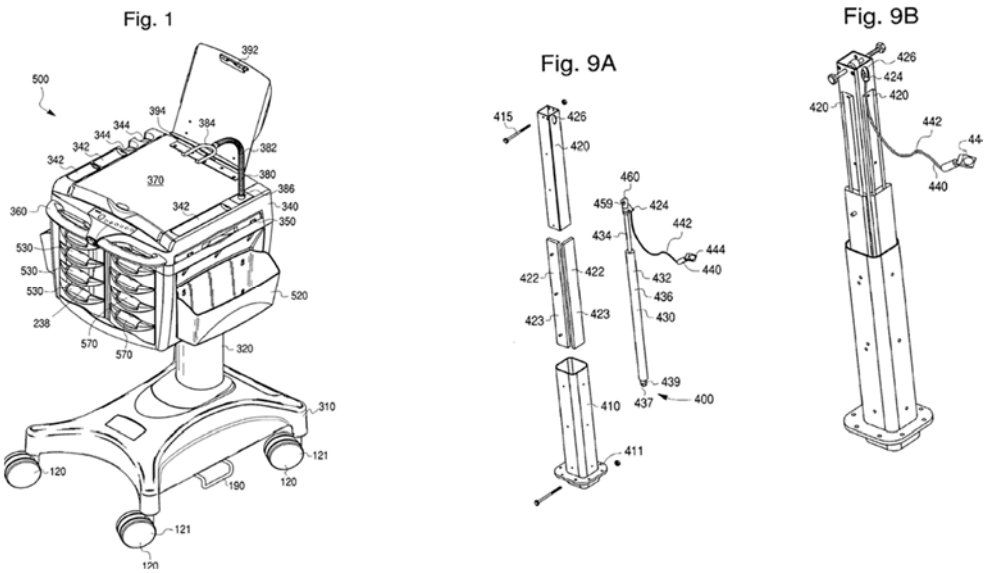

Id., Fig. 1 (depicting medical cart 500), Figs. 9A and 9B (depicting height adjustment mechanism 400). Work platform 340 also includes a "bi-directional work surface 350 [that] is designed to move through a slot 343 in the side 341 of the work platform 340 in leftward and rightward directions to provide additional work space" as shown in Figs. 4A and 4B. *Id.*, 5:50-56.

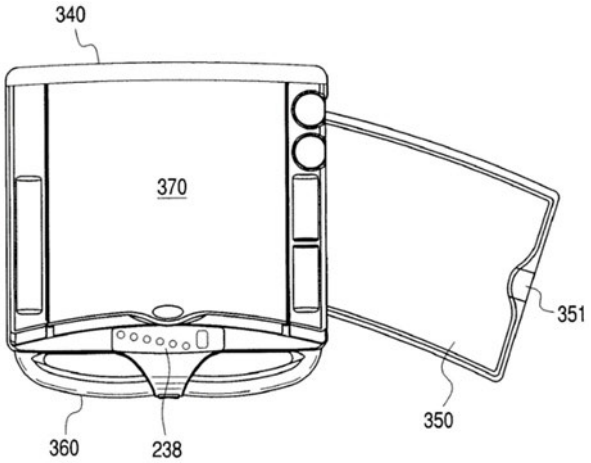

Id., Fig. 4A.

B. U.S. Patent No. 8,109,527 ("the '527 patent")

The '527 patent describes a keyboard tray particularly suited for use in medical carts. Ex. C, 1:10-12. Specifically, the '527 patent includes a medical cart comprising a base supported on wheels. *Id.*, *Abstract*. A "first arm" (24) supported on a "track" (30) for linear movement in a first direction and itself supports a "first platform" (22). *Id.*, 2:31-38. The "first arm" (24) also

supports a "second platform" (46) mounted for linear movement in a second direction substantially perpendicular to the first direction. *Id.*, 2:54-62. The "first platform" (22) is mounted on a tilt assembly such that the angle of the "first platform" (22) relative to the "second platform" (46) can be adjusted. *Id.*, *Abstract*.

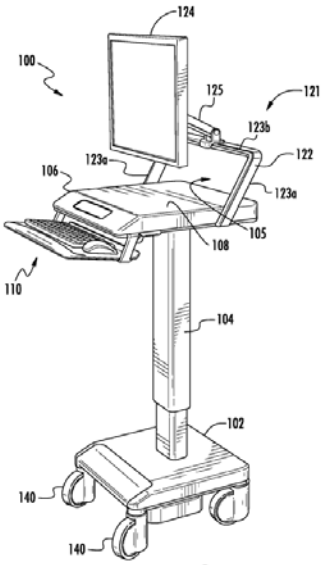

FIG. 1

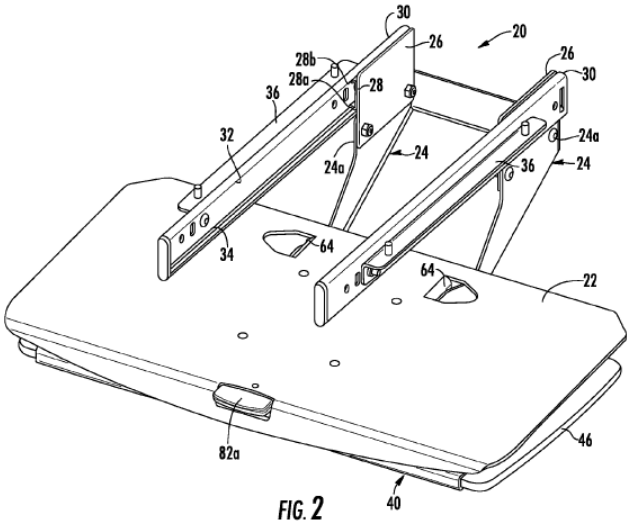

FIG. 2

C. U.S. Patent No. 9,039,016 ("the '016 patent")

The '016 patent describes an accessory cart that can be used in a healthcare setting and includes a base (102) connected to a housing element, (104) and a work platform (106) connected to the housing element, wherein the height of the work platform is automatically adjustable. Ex. D, 5:49-58.

Specifically, the height of the work platform is automatically adjustable through a non-manual force to a predetermined position. *Id.*, 9:11-16. This predetermined position reflects the appropriate height for placing the user in an ergonomic position, so as to avoid strain on the user while using the cart. *Id.*, 9:24-29. These predetermined positions are based on, for example, the user's detected or known standing height. *Id.*, 10:16-21, 10:62-67. For example, the '016 patent explains that the user's height may be detected via a sensor "operable to detect a measurable aspect

of a user" or calculated based on "the average distance between the eyes and elbows of a person." *Id.*, 9:21-23, 10:62-67. The work platform includes a control panel in communication with a processor that contains a database of possible user heights and predetermined ergonomic positions associated with such heights. *Id.*, 10:16-21. A user can, for example, input his/her standing height at the control panel or the system can detect a user's standing height, and, based on the detected or known user height, the system will determine the associated predetermined ergonomic position. *Id.*, 11:3-9. The work platform is then automatically adjusted to the associated predetermined ergonomic position. *Id.*, 11:9-15.

III. SUMMARY OF LAW

Construction of a patent, including terms of art within a claim, is exclusively within the province of the court. *See Markman v. Westview Instruments, Inc.*, 517 U.S. 370, 388, 390-91 (1996). In determining the meaning of a disputed claim limitation, the intrinsic evidence, including the claim language, written description, and prosecution history, is the most significant. *See Phillips v. AWH Corp.*, 415 F.3d 1303, 1313-17 (Fed. Cir. 2005) (en banc). "[W]ords of a claim 'are generally given their ordinary and customary meaning'" as understood by a person of ordinary skill in the art. *Id.* at 1312–13 (quoting *Vitronics Corp. v. Conceptronic, Inc.*, 90 F.3d 1576, 1582 (Fed. Cir. 1996)). Claims are read in view of the specification, which is the "single best guide to the meaning of the disputed term." *Phillips*, 415 F.3d at 1315. Courts "should also consider the patent's prosecution history, if it is in evidence." *Markman v. Westview Instruments, Inc.*, 52 F.3d 967, 980 (Fed. Cir. 1995), *aff'd*, 517 U.S. 370 (1996). Finally, although it is generally less significant than the intrinsic record, extrinsic evidence can "shed useful light on the relevant art." *Phillips*, 415 F.3d at 1317 (quoting *C.R. Bard, Inc. v. U.S. Surgical Corp.*, 388 F.3d 858, 862 (Fed. Cir. 2004)). Courts may use expert testimony, for example, to provide background on underlying technology, explain how an invention works, "to ensure that the court's understanding of the

technical aspects of the patent is consistent with that of a person of skill in the art, or to establish that a particular term in the patent or the prior art has a particular meaning in the pertinent field." *Phillips*, 415 F.3d at 1318.

IV. AGREED-UPON CONSTRUCTIONS

A. U.S. Patent No. D762,339 ("the '339 patent")

The Parties have also agreed to the construction set forth below:

Term/ Phrase	Agreed Construction
The ornamental design for a 'cart,' as shown and described. (D'339 patent, cl. 1)	The ornamental design for a "cart," as shown in Figures 1-7 and described by the specification.

V. DISPUTED CONSTRUCTIONS

A. U.S. Patent Nos. 7,594,668 ("the '668 patent") and 8,215,650 ("the '650 patent")

1. "height adjustment mechanism"

Plaintiff's Proposal	Defendant's Proposal
A set of components for adjusting the height of an object.	No construction necessary. '668 patent, cl. 3, 4; '650 patent, cl. 1, 2

The term "height adjustment mechanism" requires no construction. Rather, the claims themselves expressly define what "height adjustment mechanism" means. The Court therefore has no occasion to look beyond the claims (much less to other patents, as Capsa proposes) to confirm "height adjustment mechanism" requires no construction. Capsa's proposal, however, introduces unnecessary complexities and confusion by improperly defining the term by repeating its own language.

For example, the asserted claims of the '668 and '650 patents each require that the height adjustment mechanism include certain components. Claims 3 and 4 of the '668 patent each

describe a "height adjustment mechanism for adjusting the height of the work platform relative to the base." In particular, Claims 3 and 4 of the '668 patent specify that:

> the height adjustment mechanism is configured to releasably lock/[or position] the work platform at a plurality of heights… [and]
> the height adjustment mechanism compris[es]:
> a stationary casing connected to the base,
> a telescoping casing connected to the work platform and configured to move relative to the stationary casing,
> a driver configured to releasably lock the telescoping casing relative to the stationary casing, [and]
> an actuator for controlling the driver.

Ex. A, 15:15-24, 15:34-44. The '668 patent further requires the height adjustment mechanism include "drawer slides." *Id.*, 15:15-24. Similarly, the '650 patent specifies the height adjustment mechanism requires a driver and an actuator (claim 1) and a pair of telescoping portions (claim 2). Ex. B, 14:28-35, 14:52-58. Thus, there is no need to further define the claimed "height adjustment mechanism." Capsa's construction should therefore be rejected. *See BNJ Leasing, Inc. v. Portabull Fuel Serv., LLC*, No. 2:19-CV-156, 2021 WL 1110299, at *2 (S.D. Miss. Mar. 23, 2021) ("[T]he Court is not required to construe a claim term if it is 'a "straightforward term" that require[s] no construction.'" (quoting *Summit 6, LLC v. Samsung Elecs. Co.*, 802 F.3d 1283, 1291 (Fed. Cir. 2015)).

By contrast, Capsa's proposed construction introduces confusion and seeks to impermissibly broaden the scope of the term. Capsa's proposal provides no clarity because it simply rearranges the construed term to define it. *See* Dkt. 42-1 at 1 (proposing "*height adjustment* mechanism" as "a set of components *for adjusting* the *height* of an object."). Such a redundant and circular construction adds no clarity, as becomes abundantly evident when pairing Capsa's proposed construction to the remaining claim language. For example, as shown below, substituting

Capsa's proposed construction for the construed term ("height adjustment mechanism") in claims 3 and 4 of the '650 patent and claim 1 of the '668 patent would result in the redundancy:

> a [*set of components for adjusting the height of an object*] for adjusting the height of the work platform relative to the base,

Moreover, Capsa's construction would impermissibly broaden the term beyond the scope of the claims, which specify that the "height adjustment mechanism" "adjust[s] the height of the work platform relative to the base." Capsa seeks to broaden this so that the "height adjustment mechanism" is merely required to "adjust[] the height *of an object*." Dkt 42-1 at 1. The Court should reject this broadening construction. The claims specify the "object" must be "the *work platform*." Ex A, 14:66-67, 15:34-35; Ex. B, 14:28-29 ("a height adjustment mechanism for adjusting the height of *the work platform*"). Capsa's construction cannot be correct.

The Court should decline to construe the term "height adjustment mechanism" in view of the claims' own definition of what the "height adjustment mechanism" comprises, and the Court should decline Capsa's invitation to broaden the claim scope with a repetitive and unclear construction that would merely serve to confuse the jury.

2. "work platform"

Plaintiff's Proposal	Defendant's Proposal
A height adjustable set of components for facilitating work configured to be raised and lowered together.	Plain and ordinary meaning '668, cl. 3, 4; '650, cl. 1, 2, 6, 8

The term "work platform" recites two well-known words with understood meanings. "The words of a claim are generally given their ordinary and customary meaning as understood by a person of ordinary skill in the art when read in the context of the specification and prosecution history." *Thorner v. Sony Computer Ent. Am. LLC*, 669 F.3d 1362, 1365 (Fed. Cir. 2012). "There are only two exceptions to this general rule: 1) when a patentee sets out a definition and acts as his

own lexicographer, or 2) when the patentee disavows the full scope of a claim term either in the specification or during prosecution." *Id.* The court should adopt the plain and ordinary meaning because neither exception applies here.

First, the plain meaning of "work platform" is apparent because the claims specify that the work platform includes certain components and is height adjustable. *See e.g.,* Ex. A, 14:62-67 ("a work platform including a work surface and compartments for containing items . . . a height adjustment mechanism for adjusting the height of the work platform"); 15:28-34 ("a work platform including a work surface and at least one compartment… a height adjustment mechanism for adjusting the height of the work platform."); Ex. B., 14:22-24 (same). Because the independent claims in the '668 and the '650 patents define what a work platform is, there is no reason to construe the term.

Moreover, the plain meaning should apply because the patentee did not set out a special definition for work platform. "To act as its own lexicographer, a patentee must 'clearly set forth a definition of the disputed claim term' other than its plain and ordinary meaning." *Thorner*, 669 F.3d at 1365 (quoting *CCS Fitness, Inc. v. Brunswick Corp.*, 288 F.3d 1359, 1366 (Fed. Cir. 2002)). Indeed, the patentee must "clearly express an intent" to redefine the term. *Helmsderfer v. Bobrick Washroom Equip., Inc.*, 527 F.3d 1379, 1381 (Fed. Cir. 2008). Rather than express any such intent, the patentee here took care to describe the work platform with permissive language. *See* Ex. A, 2:19-27 ("The work platform *can include* a laptop platform . . . [t]he work platform also *can include* a work surface…[t]he work platform also *can include* a barcode scanner…[t]he work platform *can include* sidewalls."), 4:28-35 ("The work platform 340 *can include* a bi-directional laptop platform 370, a bi-directional work surface 350, an adjustable barcode scanner holder 380, an adjustable clipboard 390, one or more lockable compartments 530, a plurality of top bins 342,

removable side bins 520, cup holders 344, and/or a keypad 238."), 8:15-16 ("The work platform 340 *may be* raised and lowered by means of the support mechanism 320."). Because the patentee failed to set forth an express definition for "work platform," the plain and ordinary meaning should apply.

Capsa's proposed construction, however, sows confusion and lacks clarity. It replaces the simple two-word term, "work platform," with an overcomplicated sixteen-word construction. And despite the phrase having but two terms, Capsa again proposes a definition using the claim term's own language, further demonstrating the plain meaning of that term should apply. Thus, Capsa's proposed construction repeats itself in snowball fashion when placed into context in the full claim, including "height adjustable" and "configured to be raised and lowered together":

> a height adjustment mechanism for adjusting the height of the [*height adjustable set of components for facilitating work*] configured to be raised and lowered together relative to the base …
>
> …
>
> wherein the height adjustment mechanism is configured to releasably lock the [*height adjustable set of components for facilitating work*] configured to be raised and lowered together at a plurality of heights, ...

Capsa's construction also discounts the meaning of the term "platform," which has a well understood meaning in ordinary English, and replaces it with the broader phrase "set of components." Indeed, Capsa proposes to redefine the term "mechanism" from "height adjustment mechanism" as "a set of components," leaving no distinction in Capsa's proposals between the terms "platform" and "mechanism." According to Capsa, both are merely sets of components. This construction improperly conflates distinct claim terms and discounts the meaning of "platform" as recited in the claims and described in the specification. *See id.*, 4:28-35, 5:40-49, Figs. 1, 2A, and 2B (depicting work platform 340 comprising substantially horizontal surface laptop platform 370,

substantially horizontal bi-directional work surface 350, and substantially horizontal secondary work area 379).

Finally, Capsa's proposed construction cannot be correct because it reads on structures well outside customary meaning as understood by a person of ordinary skill in the art. To give just a few examples, Capsa's proposed "work platform" construction would ostensibly read on scaffolding, scissor lifts, a telescoping painter's roller, or a collapsible hospital gurney—all height adjustable sets of components that broadly "facilitate work" (i.e., construction work, painting, or surgery). Capsa's construction exceeds the bounds of the customary meaning of "work platform" as understood by a person of ordinary skill in the art reviewing the claims, and Capsa's proposal should be rejected.

3. "work surface"

Plaintiff's Proposal	Defendant's Proposal
Plain and ordinary meaning	A curved surface at the top of a cart large enough to dispense medication or hold work papers. '668 patent cl. 3, 4; '650 patent cl. 1

The Court should construe the term "work surface" as a "curved surface at the top of a cart large enough to dispense medication or hold work papers," because—here—the patentee both (1) acted as its own lexicographer to define the term "work surface" in the Specification to solve a specific problem that the inventors sought to address and (2) disavowed the full scope of the term.

Now that the patents have issued and prosecution has been closed, Capsa seeks to argue—under the guise of "plain and ordinary meaning"—that a keyboard or mouse tray in the accused product would read on the claimed "work surface." However, Capsa's proposal ignores the express definition of "work surface" in the Specification. Furthermore, the patentee's disparagement of the prior art during prosecution of the '650 patent prevents Capsa from now seeking the broad "plain

and ordinary" construction it now seeks. Because the principals of lexicography and disavowal both apply, the Court should reject Capsa's plain meaning proposal and adopt the definition set forth by the patents themselves. *See Phillips*, 415 F.3d at 1316 ("[O]ur cases recognize that the specification may reveal a special definition given to a claim term by the patentee that differs from the meaning it would otherwise possess."); *see also id.*, ("In other cases, the specification may reveal an intentional disclaimer, or disavowal, of claim scope by the inventor. In that instance as well, the inventor has dictated the correct claim scope, and the inventor's intention, as expressed in the specification, is regarded as dispositive.").

a. The Claimed "Work Surface" is Located at the Top of the Cart

During prosecution of the '650 patent, the Applicant distinguished its invention from the prior art by arguing its work surface is located at the top of the cart above the compartments. In fact, the Examiner rejected every claim in the then-pending application in view of other prior art carts that had work surfaces in multiple arrangements and configurations. *See* Ex. 5 at 2-10. Specifically, the Examiner explained that U.S. Patent No. 6,721,178 ("Clark") shows a cart having a work platform (86), a compartment (the space below 86 and above 70), and a work surface (upward facing side of the bottom of wall 12). Ex. 5 at 5-6.

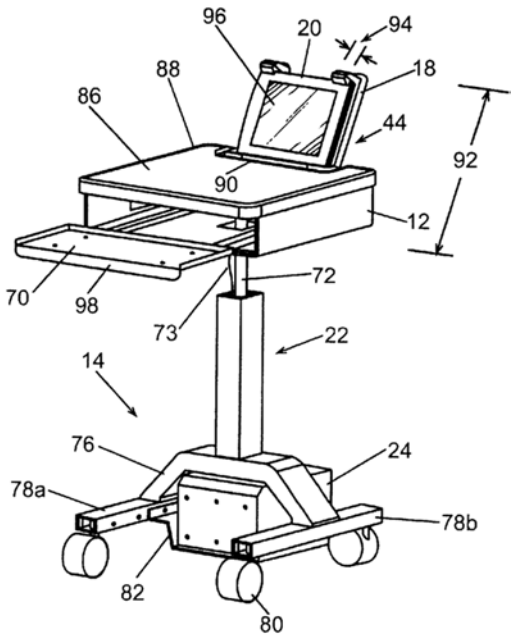

Ex. 8, Fig. 4B.

During a subsequent interview, the Applicant and the Examiner discussed the "various movable work surfaces at the top of the cart (elements 370 and 350) with Rubbermaid's patent counsel." Ex. 5 at 15 (referring to work surface 350 and movable platform/laptop platform 370). The Applicant proposed amending the independent claims so that the work surface is disposed above a top of the at least one compartment, and the Examiner indicated that the prior art "would not reasonably meet a claim with these further limitations." *Id.* The Applicant then formally distinguished the prior art through claim amendments, by specifying that the work surface is located at the top of the cart, above all of the compartments in the work platform. *Id.* at 17-21; *see also* Ex. B, claim 1 ("wherein the work surface is disposed above a top of the at least one compartment"). Furthermore, the Applicant confirmed "[t]he statements made in the Interview Summary are correct." Ex. 5 at 22 (referring to Ex. 5 at 15). In arguing that its amendments distinguished the claims over Clark, the Applicant also stressed that "[t]he placement of the work surface above the compartment permits easier accessibility to the increased workable surface area

than would be otherwise," and there "is no moveable work surface located above the space" above keyboard tray 70 of Clark. *Id.* at 23. Only then did the Examiner allow the claims. *Id.* at 33.

Accordingly, the Applicant disclaimed claim coverage extending to work surfaces located elsewhere, including below the compartments, by distinguishing Clark and other prior art with claim amendments based on where the work surface is located. *See, e.g.*, *Ekchian v. Home Depot, Inc.*, 104 F.3d 1299, 1304 (Fed. Cir. 1997) ("[S]ince, by distinguishing the claimed invention over the prior art, an applicant is indicating what the claims do not cover, he is by implication surrendering such protection."). While Capsa now seeks to assert the claims more broadly, it is not permitted to recapture claim scope surrendered during prosecution to secure allowance of the claims. Thus, the claimed work surface must be located at the top of the cart.

b. The Applicant Disclosed and Claimed a "Work Surface" That Is Curved

The Specification explains that "[t]he bi-directional work surface 350 is shown in FIGS. 3A, 3B, 3C, 4A, and 4B." Ex. A, 5:52-53. Consistent with that description, Figures 4A and 4B show that the work surface 350 is a curved work surface at the top of the cart:

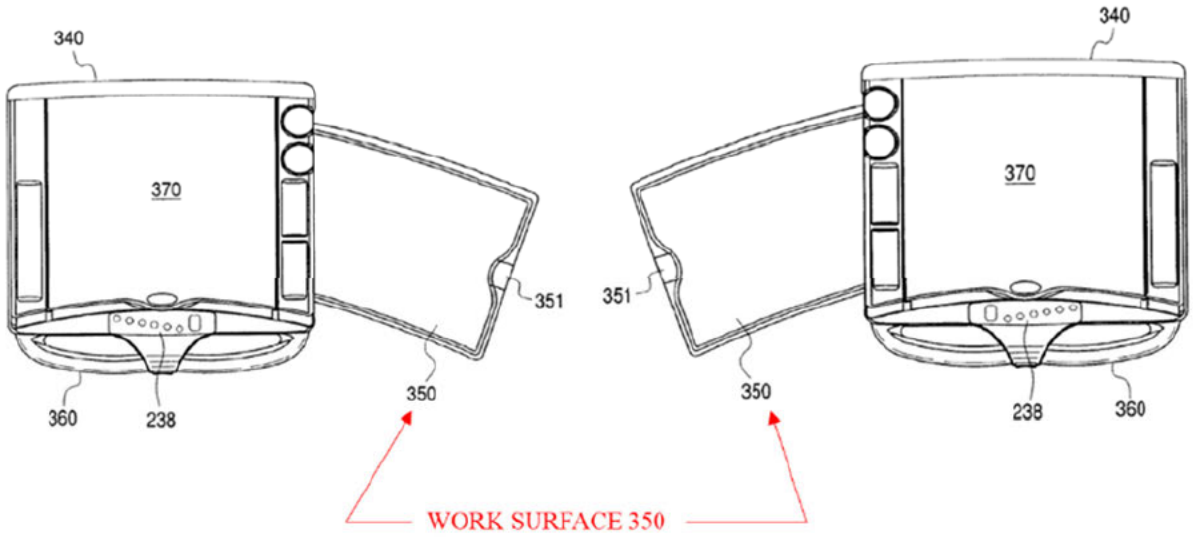

Ex. B, Figs. 4A and 4B (annotated). The Specification goes on to explain that the "work surface" in the claimed invention is "arcuate," i.e., curved in shape:

> When the bi-directional work surface 350 slides to the right or to the left, it slides in an arcuate path as a result of the channels 355, 357 and ribs 358, 369 **(and the work surface 350) being arcuate in shape**. As a result, the second bi-directional work surface 350 is positioned closer to a user standing or sitting in front of the medical cart 500 when it is in an extended position.

Id., 6:14-20 (emphasis added).

The Applicant's clear explanation in the Specification demonstrates its clear intent to define the work surface as curved. Indeed, when the Applicant intended to describe features as optional, it used permissive language. *See id.*, 5:1-41 ("In one embodiment, one notch 374 *may be* provided on each of the rail runners . . ."), 2:20-28, 4:30-37 (listing features that "[t]he work platform *can include* …"), 8:15-16 ("The work platform 340 *may be* raised). But when describing the claimed "work surface," the Applicant defined it as "**being arcuate in shape**." Ex. A, 6:13-16.

The Applicant made similar statements defining the work surface in priority provisional applications that it incorporated into the Specification by reference. *See* Ex. B, 1:8-18 (incorporating priority applications "in their entirety."); *Advanced Display Sys., Inc. v. Kent State Univ.*, 212 F.3d 1272, 1282 (Fed. Cir. 2000) (Provisional applications incorporated by reference are "effectively part of the" specification as though it was "explicitly contained therein."). The priority provisional applications include invention disclosure forms prepared by the inventors that include clarify their understanding and representations of the scope of the claimed invention.

In one priority application, the Applicant explained that the work surface "must curve around the user" to solve problems with prior art:

1. Were you trying to solve a problem when you created your invention? What was the problem? How was the problem identified and brought to your attention?

Needed a large work surface for end users on cart. We needed a large curving work surface that can be used by either left handed or right handed users. The work surface must curve around the user for better ergonomics. This was brought to our attention through end user research spent talking to nurses who use a competitive cart.

2. Have others tried to solve this problem before you? What have they done? Why did you believe that a new solution was needed?

Ex. 2 at 12. In another priority application, the Applicant explained, "[a]ll units have an ergonomic *curving* work surface." Ex 3 at 14 (emphasis added). Thus, the incorporated parent applications confirm the Specification's disclosure that the work surface must be curved. *See Trustees of Columbia Univ. in City of New York v. Symantec Corp.*, 811 F.3d 1359, 1365-66 (Fed. Cir. 2016) (relying on definition of "byte sequence feature" in a provisional application to confirm Applicant's definition of that term in the specification).

c. The Specification Makes Clear that the"Work Surface" Must be Large Enough to Dispense Medication and Hold Work Papers

The work surface must be large enough to dispense medication and hold work papers because the Specification disparages smaller work surfaces known in the art. When considering work area, the Specification explains that prior art medical carts had "proven unsatisfactory for a number of reasons . . . existing EMAR [Electronic Medication Administration Record] carts suffer from a relative lack of work surface." Ex. B, 1:42-47. The Specification further explains that the work platform solves a particular problem: "[t]he bi-directional work surface 350 is designed to move through a slot 343 in the side 341 of the work platform 340 in leftward and rightward directions *to provide additional work space*." *Id.*, 5:55-58. The Applicant thus distinguished its invention from the prior art based on the amount of work space provided by the work surface.

The Applicant made consistent statements in the priority applications. In its provisional applications, the Applicant pointed out that the work surfaces on existing carts did not provide enough work area to allow users to prepare medications or place papers:

- **Second, There is not enough work area for medication preparation. When used as a light-duty medication cart, the pull-out work surfaces are too small for med preparation.**

Ex. 4 at 6.

- **End users do not have sufficient workspace for medicine preparation and writing. Also, the work surface is too small to place a 8.5" X 11" sheet of paper, let alone, a full sized, three inch wide, three-ring medical binder.**

Ex. 3 at 3.

To solve this problem, the Applicant developed medical cart with "larger work surfaces." *See* Ex. 2 at 12. The Applicant describes its invention as "a good solution because…there is plentiful amount of workspace." Ex. 3 at 4. By repeatedly criticizing the prior art as "not hav[ing] sufficient workspace for medicine preparation and writing" or "too small to place a 8.5" x 11" sheet of paper, let alone a full sized, three inch wide, three ring medical binder," *id.* at 3, the Applicant surrendered coverage of medical carts with work surfaces that are "too small" to prepare medications or hold work papers. *See LizardTech, Inc. v. Earth Resource Mapping, Inc.*, 424 F.3d 1336, 1343–44, (Fed. Cir. 2005) ("While it is true that not every advantage of the invention must appear in every claim, it would be peculiar for the claims to cover prior art that suffers from precisely the same problems that the specification focuses on solving." (internal citation omitted)).

The required size of the work surface is reinforced by the '650 patent's claim language, which requires the work surface to be "disposed above a top of the at least one compartment." Ex B, 14:24-25. A work surface disposed above the top of the compartments is accessible to a user who intends to use it to dispense medication and hold work papers. Small surfaces located lower on the medical cart are not so accessible, and they present the same problem the inventors set out

to solve. *See id.*, 1:43-46 (describing prior art medical carts as "not ergonomically designed" and that "roughly 83% of nurses report suffering chronic back pain.")

Capsa seeks to claw back representations that its predecessor made to obtain the allowance of these claims. More than ten years after telling the patent office that its large, curved work surface located "at the top of the cart" distinguished its invention over the prior art, Capsa now seeks to read "work surface" on small mouse trays or extendable keyboards trays located below compartments. The Court should construe the term as Howard proposes to properly capture the Applicant's representations to the patent office.[1]

4. "wherein the work surface is movable"

Plaintiff's Proposal	Defendant's Proposal
Plain and ordinary meaning	Wherein the curved surface near the top of the cart large enough to dispense medication or hold work papers moves along a curved path toward the user. '650 patent cl. 1

Like with the term "work surface," the Court should construe the phrase "wherein the work surface is moveable" consistent with the Applicant's disclosure and arguments to obtain the patent. Howard's construction is consistent with the meaning of the term "work surface" and incorporates the manner in which it moves as defined in the '650 and '668 patents.

[1] Howard's proposed construction aligns with the District Court of North Carolina's construction of the same term in the '650 Patent after it considered similar evidence. *See* Ex. 1 at 16 (construing "work surface" as "Curved surface near the top of the cart that is large enough to dispense medication or hold work papers") (Order *sua sponte* vacated to facilitate settlement, Ex. 1 at 17).

Claim 1 of the ’650 patent requires that “the work surface is movable relative to a remainder of the work platform from an extended position to a non-extended position.” Ex. B, 14:49-51. Howard’s proposed construction incorporates the proper meaning of the term “work surface” discussed above. The construction also clarifies how the work platform moves “from an extended position to a non-extended position” when it “moves along a curved path toward the user.” Howard’s construction is consistent with the clam language and also incorporates the definition of “work surface” given by the patentee in the Specification.

As noted above, the Specification clarifies that the work surface “slides in an arcuate path,” which allows the work surface to be “positioned closer to a user standing or sitting in front of the medical cart 500 when it is in an extended position.” *Id.*, 6:14-20. The Applicant’s description of the work surface movement is specific and not couched in permissive terms: every pertinent figure in the patent depicts the work surface moving along a curved path toward the user. *See id.*, 5:52-53, Figs. 3A, 3B, 3C, 4A, and 4B. Nowhere does the ’650 patent disclose a work surface that moves differently.

Removing all doubt, the inventors’ provisional disclosure emphasizes that “[t]he work surface *must* curve around the user.” Ex. 2 at 12 (emphasis added); *see also* Ex. 3 at 12 (disclosing channels that guide the work surface in a curving path). Use of the word “must” indicate a clear disavowal of claim scope. *See, e.g.*, *Tap. Pharm. Prods., Inc. v. Owl Pharms.*, LLC, 419 F.3d 1346, 1353-54 (Fed. Cir. 2005) (upholding district court’s construction that limited the scope of a claim based on the patentee’s use of the word “must” in the Specification). The Applicant intentionally limited the alleged invention to require that the work surface moves along a curved path toward the user. Accordingly, the Court should adopt Howard’s proposed construction.

Howard's proposed construction also aligns with the District Court of North Carolina's prior construction of the same term in the '650 Patent. *See* Ex. 1 at 16 (construing "[w]herein the work surface is movable" as "[a] curved surface near the top of the cart that is large enough to dispense medication or hold work papers is movable along a curved path toward the user"). The Court should make a similar determination here. *See Finisar Corp. v. DirecTV Grp., Inc.*, 523 F.3d 1323 at 1329 (Fed. Cir. 2008).

5. "movable platform"

Plaintiff's Proposal	Defendant's Proposal
Plain and ordinary meaning Or in the alternative: A substantially flat raised area or structure that can move.	Movable surface at the top of the cart. '650 patent cl. 6

The Court should construe "moveable platform" as "movable surface at the top of the cart." Claim 6 of the '650 patent explains that the "work platform further comprises a movable platform configured to move in at least one of the forward direction and the rearward direction." Ex. B, 15:1-3. Howard's construction comports with the claim language because it recites the requirement that the platform is moveable. Furthermore, it incorporates the Applicant's prosecution disclaimer of the location of the moveable platform within the work platform. The moveable platform must be at the top of the cart.

As with "work surface," the Applicant disclaimed moveable surfaces including the "moveable platform" in any other location on the cart during prosecution. During prosecution, the Examiner identified Clark's tray (70) as "a moveable platform (70) which can be moved in a forward and rearward direction." Ex. 5 at 6. Clark's tray is shown in Fig. 4B below:

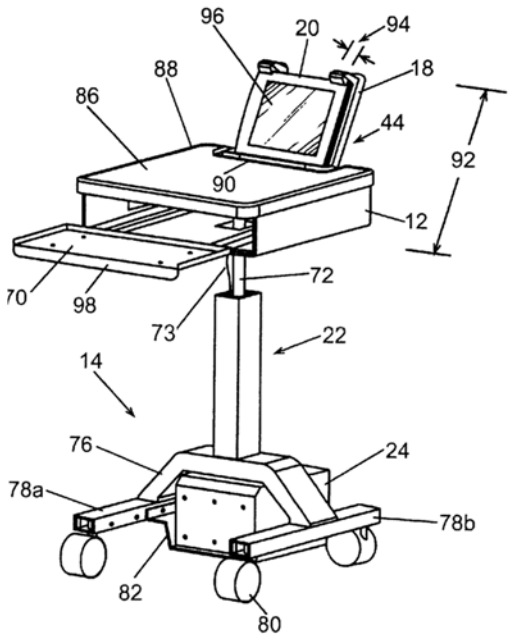

Ex. 8, Fig. 4B.

The Applicant confirmed to the Examiner that its moveable platform is located at the top of the cart, not elsewhere. *See* Ex. 5 at 15 (discussing the "various movable work surfaces *at the top of the cart* (elements 370 [moveable platform/laptop platform] and 350 [work surface].)" The Applicant then confirmed that "[t]he statements made in the Interview Summary are correct." *Id.* at 22 (referring to Ex. 5 at 15). And, later in its response, the Applicant distinguished the prior art with claim amendments clarifying the work surface is located at the top of the cart, above the compartments. *Id.* at 17-21. It added that there "is no moveable work surface located above the space" over keyboard tray 70 of Clark. *Id.* at 23. Accordingly, the Applicant disavowed claim scope afforded by the plain and ordinary meaning. *See, e.g.*, *Ekchian*, 104 F.3d at 1304.

It follows then, that the movable work platform/laptop platform is located at the top of the cart, above the compartments. Such a construction matches the figures in the '650 patent, which

shows the moveable platform 370 at the top of the cart in every embodiment. *See* Ex. B, Figs. 1, 2A, 2B, 6B, 6C, 13, 14, 16, and 21A.[2]

6. "compartment(s)"

Plaintiff's Proposal	Defendant's Proposal
An enclosed space for containing an item.	A small chamber, receptacle, or container. '668 patent cl. 3, 4; '650 patent cl. 1, 5

Howard's proposed construction "involves little more than the application of the widely accepted meaning of [a] commonly understood word[]," and it aligns with the '668 and '650 patent claims, specification, figures, and the embodiments described therein. *Phillips*, 415 F.3d at 1314. Accordingly, Howard's proposal captures the proper construction of the term "compartment."

Howard's construction is supported by the intrinsic record. The claims specify that the compartment(s) are "for containing [an] item." Ex. A, 14:63, 15:30; Ex. B, 14:23. Howard's construction aligns with the claims because a small chamber, receptacle, or container can contain an item. Howard's construction also aligns with the Specification. The Specification describes the claimed "compartment" as something that "can be a drawer." Ex. B, 2:16. The patent depicts its compartments, 530A-530E, in Figures 7 and 8 below:

[2] Howard's proposed construction algins with the District Court of North Carolina's construction of the same term in the '650 Patent. *See supra* n1.

Fig. 7

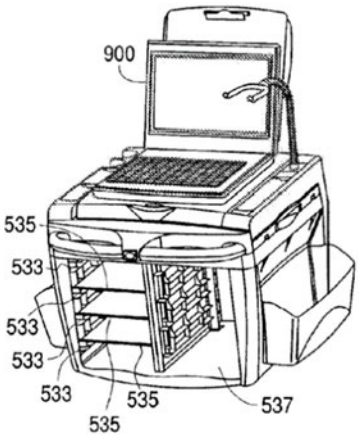

Fig. 8

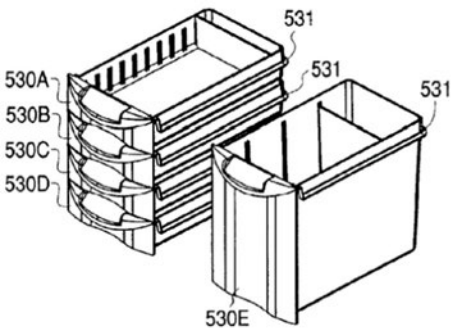

Id., Fig 8; *see also id.*, 7:46-65. The disclosed embodiments of a drawer align with Howard's construction because a drawer is a chamber, receptable, or container. Extrinsic evidence further supports Howard's proposed construction. Ex. 6, Webster's Third New International Dictionary 462 (2002) (defining "compartment" as "a small chamber, receptacle, or container.").

Capsa's construction does not comport with the intrinsic evidence. The claims do not require the compartment be enclosed. Rather, the claims specify only that the claimed compartments are "for containing items." *See* Ex. A, 14:62-63, 15:29-30; Ex. B, 14:23-24. Furthermore, Figures 7 and 8 reveal that compartments 530A and 530E have open tops, and thus, Capsa's proposed requirement that the compartment is "enclosed" depends not on the geometry and shape of the drawer, but whether the drawer is in an open or a closed position, and/or engages with a cover when inserted, such as divider 535 positioned over the top opening. Ex. A, 7:52-57 ("For example, as shown in FIG. 7, four short compartments 530A-D can be removed, thereby exposing dividers 535 (which may be, for example, sheet metal)."). Moreover, in some situations, drawer-style compartments slid into a "closed" position may still not be enclosed, for example, if compartments 530B and 530D were installed, but compartments 530A and 530C were not. Indeed, the Specification emphasizes that drawers and dividers can be removed "based on the desired application." *See* Ex. B, 7:53-67 ("By removing the dividers 535 (e.g., by sliding them out of the

medical cart 500), as shown in the left side of the medical cart 500 in FIG. 7, a tall space 537 may be created.").

Accordingly, Capsa's construction merely invites the Court to improperly import limitations well-beyond those of the embodiments disclosed in the Specification into the claims. *See Hill-Rom Servs., Inc. v. Stryker Corp.*, 755 F.3d 1367, 1371-74, (Fed. Cir. 2014) ("Nothing in the specification or prosecution history makes clear that the invention is limited to use of a cable as a datalink. Absent such language, we do not import limitations from the specification into the claims."). The Court should decline Capsa's invitation. Unlike Capsa's proposed construction, Howard's construction of "a small chamber, receptable, or container" remains a "compartment" regardless of its arrangement with other compartments or whether it rests in an open or closed position. The Court should adopt Howard's construction.

7. "at least one compartment"

Plaintiff's Proposal	Defendant's Proposal
Plain and ordinary meaning	One or more compartments. '650 patent cl. 1

The Court should construe the phrase "at least one compartment" as "one or more compartments," consistent with longstanding legal precedent. It is well established that the phrase "at least one" means "one or more." *See e.g.*, *Z4 Techs., Inc. v. Microsoft Corp.*, 507 F.3d 1340, 1349 (Fed. Cir. 2007) ("[T]he 'use of the phrase "at least one" means that there could be only one or more than one'" (quoting *Rhine v. Casio, Inc.*, 183 F.3d 1342, 1345 (Fed. Cir. 1999)); *Kistler Instrumente AG. v. United States*, 628 F.2d 1303, 1318 (Ct. Cl. 1980), decision supplemented, 228 Ct. Cl. 921 (1981) ("[E]ven the most rudimentary understanding of the English language understands 'at least one piezo-electric crystal means lodged within said component means,' to mean one or more crystals"); *see also Omega Eng'g, Inc. v. Raytek Corp.*, 334 F.3d 1314, 1322

(Fed. Cir. 2003). The patent Specification further supports Howard's proposed construction because it explains the "[t]he work platform 340 can include…*one or more* lockable compartments 530." Ex. B, 4:30-33. Therefore, the Court should adopt Howard's proposed construction.[3]

As discussed *infra*, the proper construction of "at least one compartment" clarifies the positioning of other components of the cart, which are positioned relative to the compartments. *See* Ex. A, 15:56-58 ("wherein the actuator is disposed above the compartment"); Ex B, 14:46 (same), 14:24-25 ("wherein the work surface is disposed above a top of the at least one compartment").

8. "disposed above the compartment(s)" / "disposed above a top of the at least one compartment"

Plaintiff's Proposal	Defendant's Proposal
Plain and ordinary meaning (in view of other proposed definitions)	Disposed above all the one or more compartments. '668 patent cl. 3, 4; '650 patent cl. 1

The Court should construe the phrase "disposed above the compartment(s)" / "disposed above a top of the at least one compartment" to mean "disposed above all of the one or more compartments." This is the logical outcome of applying the definite article "the" to the proper construction of "compartment(s)" and "at least one compartment." The use of the definite article "the" means the term "the compartment(s)" and "the at least one compartment" refer back to the antecedent compartment(s)/one or more compartments. *See, e.g., Warner-Lambert Co. v. Apotex Corp.*, 316 F.3d 1348, 1356 (Fed. Cir. 2003) ("It is a rule of law well established that the definite

[3] Howard's proposed construction algins with the District Court of North Carolina's construction of the same term in the '650 Patent. *See supra* n1.

article 'the' particularizes the subject which it precedes. It is a word of limitation as opposed to the indefinite or generalizing force of 'a' or 'an.'") (quotations and citations omitted).

Accordingly, claim 3 of the '668 patent reciting that the actuator be "disposed above the compartments" specifies the actuator must be disposed above *all of* the compartments. Similarly, claim 1 of the '650 patent's that the actuator be "disposed above a top of the at least one compartment" specifies that the actuator must be disposed above all the one or more compartments, not merely above one of the multiple compartments. *NTP, Inc. v. Research in Motion, Ltd.*, 418 F.3d 1282, 1306 (Fed. Cir. 2005) ("RIM correctly argues that the claim language 'a RF information transmission network for transmitting originated information to *the* at least one of the plurality of destination processors,' refers to the antecedent 'at least one of a plurality of destination processors in the electronic mail system.'" (emphasis in original)); *see also Haemonetics Corp. v. Baxter Healthcare Corp.*, 607 F.3d 776, 782-83 (Fed. Cir. 2010) (construing 'the centrifugal unit' to be the entire unit).

Howard's proposed construction also aligns with the Applicant's actions during prosecution. The Applicant amended its claim in response to a rejection to the addition of "wherein the work surface is disposed above a top of the at least one compartment." Ex. 5 at 17. The Applicant and the Examiner discussed that the claimed invention included "various moveable work surfaces at the top of the cart." *Id.* at 15. The Applicant's subsequent claim amendment confirmed that the work surface must be "at the top of the at least one compartment." *Id.* at 17. Therefore, the interview summary and associated Applicant's arguments confirm this understanding that the work surface can only be at the top of the cart if it is disposed above all of the compartments. *Id.* at 15, 17, 22-24.

The Applicant similarly disclaimed actuators positioned below all of the compartments during prosecution of its patents. During prosecution of the '668 and '650 application, the Examiner identified the location of the actuator "disposed above the compartments and on the portion of the work platform that projects in the forward direction" as allowable subject matter. Ex. 13 at 28 (Objecting to claim 24 "as being dependent on a rejected base claim, but would be allowable if rewritten in independent form"), *see also id.* at 9-10 (depicting subsequent amendments to claim 24). The Applicant allowed the parent application to go abandoned, Ex. 13 at 2, and then filed the similar claims in the application that became the '668 patent, *Compare* Ex. 13 at 9-10 (reciting claim 24) *with* Ex. A at 14:61-15:27 (reciting similar limitations in claim 3 and 4). Because the Applicant limited its invention over the prior art during prosecution of the parent application, it cannot recapture that surrendered claim scope now. *Cordis Corp. v. Bos. Sci. Corp.*, 658 F.3d 1347, 1356 n.5 (Fed. Cir. 2011) ("Arguments made in the course of prosecuting the [parent application] are relevant, however, because a disclaimer in the parent application carries forward into the construction of the same claim term in the child."); *see also Augustine Med., Inc. v. Gaymar Indus., Inc.*, 181 F.3d 1291, 1300 (Fed. Cir. 1999) ("[T]he prosecution history of a parent application may limit the scope of a later application using the same claim term.").

9. "driver"

Plaintiff's Proposal	Defendant's Proposal
A mechanical component for imparting motion to another component.	Gas driven piston. '668 patent cl. 3, 4; '650 patent cl. 1, 2, 8

The Court should construe the term "driver" as a "gas driven piston" because it is consistent with the patents' intrinsic evidence, including the claims, Specification, and figures. Furthermore,

the Court should reject Capsa's proposed construction because it contradicts the claim language and conflicts with the only embodiment disclosed in the Specification.

Howard's construction aligns with the claim language. The claims describe the driver as a locking mechanism. *See* Ex. A, 15:22-23 ("a driver *configured to releasably lock the telescoping casing relative to the stationary casing*"), 15:42-43 (same); Ex. B, 14:33-34 ("a driver configured to releasably position the work platform"). Howard's construction of a gas driven piston comports with the claim language because gas driven pistons can be used to prevent motion. *See* Ex. 10, ¶¶ 21-26.

Howard's construction also aligns with the sole embodiment disclosed in the Specification. The Specification explains the "driver 430 *includes* a gas driven piston 432 which, in turn, includes a body portion 436 and a telescoping strut 434." Ex. A, 8:52-53. Indeed, the Applicant declined to use permissive language or provide alternative embodiments, confirming the expectation that the claimed "driver" *is* a "gas driven piston." *See id.* Accordingly, the Court should construe "driver" to mean a "gas driven piston" as the Applicant intended. *See, e.g.*, *Honeywell Int'l, Inc. v. ITT Indus., Inc.*, 452 F.3d 1312, 1318 (Fed. Cir. 2006); *Bell Atl. Network Servs., Inc. v. Covad Commc'ns Grp., Inc.*, 262 F.3d 1258, 1271 (Fed. Cir. 2001).[4]

Capsa's proposed construction contradicts the claims and the Specification. The claims explain the driver is configured to releasably lock or releasably position other components. *See* Ex. A, 15:22-23, 15:42-43; Ex. B, 14:33-34. Capsa's construction takes the opposite approach because it "imparts motion" rather than prevents motion. Capsa's construction also contradicts the

[4] Howard's proposed construction algins with the District Court of North Carolina's construction of the same term in the '650 Patent. *See supra* n1.

Specification. The gas piston—the only disclosed embodiment of a driver in the Specification—does not "impart motion" to any other component. Ex. 10, ¶¶ 25-26. The Specification makes clear that it is the *user*, not the *driver*, that "imparts motion" to the work platform. Ex. A, 9:4-7, 9:23-31; *see also* Ex. 10, ¶ 24. The Specification explains that "[t]o lower the work platform 340, the button 444 is pushed as *a user pushes down* on work platform 340 thereby causing the gas driven piston 432 to expel air." Ex. A. 9:4-7. Similarly, "to raise the work platform 340, a user merely needs to pushbutton 444 and *lift upward* on the work platform 340." *Id.*, 9:23-25. The *user* imparts motion to the work platform because "the work platform 340 is light in weight, [and] it will readily move upward" with the user's assistance. *Id.,* 9:25-26.

Thus, rather than impart motion, the Specification explains that the disclosed gas driven piston prevents motion. *See id.,* 9:26-31 ("Moreover, in the process, the gas driven piston 432 will intake air, thereby enabling the work platform 340 *to remain at the raised level*, i.e., when the platform 340 is raised [by the user]."). Capsa's proposed construction reads out the only embodiment of the driver disclosed in the Specification because the Specification discloses that it is the user that moves the work platform, not the gas piston. Furthermore, one of ordinary skill in the art would recognize that Capsa's gas driven piston does not impart motion to any mechanism because the gas driven piston intakes and expels air. Ex. 10, ¶ 24. Therefore, Capsa's construction must be wrong. *See Vitronics Corp.*, 90 F.3d at 1583 (finding a construction that excludes "a preferred (and indeed only) embodiment in the Specification" is "rarely, if ever, correct.").

10. "actuator"/"actuator for controlling the driver"

Plaintiff's Proposal	Defendant's Proposal
A mechanism to activate or control equipment, e.g., by use of pneumatic, hydraulic, or electronic signals	Subject to pre-AIA 35 U.S.C. § 112(6) **Function**: "controlling the driver" **Structure**: *Indefinite* '668, cl. 3, 4; '650, cl. 1, 5, 8

The phrase "actuator for controlling the driver" invokes 35 U.S.C. § 112(6). The claims of the '668 and '650 patents use the term "actuator" as a black box conveying no structure at all. Likewise, the Specification adds no structure. And Capsa's unabashed attempt to manufacture an infringement position by proposing that an "actuator" can issue an "electronic signal"—its sole basis for alleging infringement—confirms Capsa's attempts to improperly broaden the claim beyond the patent's supportive disclosure. The Specification discloses no such "electronic signal" (let alone pneumatic or hydraulic signals). As a person of ordinary skill would readily understand, the gas driven piston driver disclosed in the Specification requires mechanical activation to control and could not be controlled by electrical signals. Ex. 10, ¶ 34. Thus, because the claim invokes 35 U.S.C. § 112(6) but discloses no underlying structure, the term is indefinite.

a. The term "actuator for controlling the driver" invokes means plus function limitations of pre-AIA 35 U.S.C. 112(6)

"Means-plus-function claiming occurs when a claim term is drafted in a manner that invokes 35 U.S.C. § 112, para. 6." *Williamson v. Citrix Online, LLC*, 792 F.3d 1339, 1347 (Fed. Cir. 2015) (en banc). While "means" is commonly used to invoke 35 U.S.C. § 112(6), words that fail to recite sufficiently definite structure or that recite function without sufficient structure for performing that function invoke § 112(6). *See e.g. id.* at 1349; *Cole v. Kimberly–Clark Corp.*, 102

F.3d 524, 531 (Fed. Cir. 1996); *Greenberg v. Ethicon Endo–Surgery, Inc.*, 91 F.3d 1580, 1584 (Fed. Cir. 1996).

Here, the claim language specifies only the function: the "actuator" is "for controlling the driver." Ex. A, 15:23, 15:44; Ex. B, 14:35. The term "actuator" does not recite sufficient function for controlling the driver. The Specification explains that the "driver 430 is controlled by an actuator 440 to which is connected by a connector 442." Ex. A, 8:54-55. The actuator may include a button 444. *Id.*, 9:2-3. The actuator 440, button 444, connector 442, and driver 430 are depicted in Figures 9A and 9B:

Fig. 9A

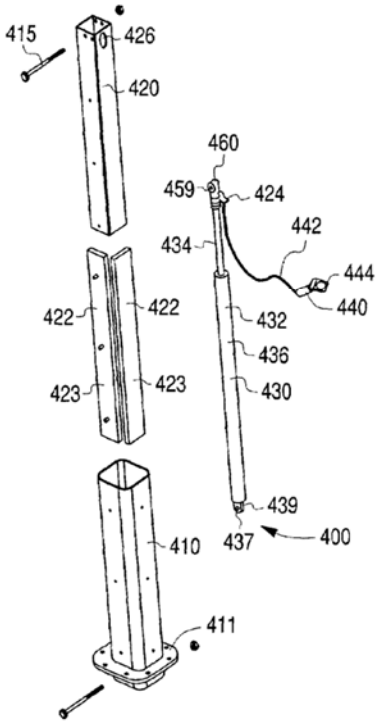

Fig. 9B

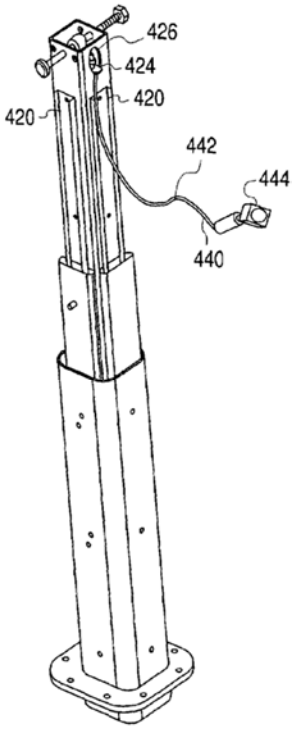

Id., Figs. 9A and 9B. But as disclosed in the Specification, the claimed actuator serves as a "black box" with no inherent structure, nor would a person of ordinary skill in the art recognize it as providing any structure. Ex. 10, ¶¶ 30-33. The figures merely disclose the actuator as including a button. The Specification adds no more clarity, simply stating that "the button 444 is pushed as a

user pushes down on work platform 340 thereby causing the gas driven piston 432 to expel air." Ex. A, 9:4-7. Nothing in the Specification or the figures explains how the actuator causes the driver/gas driven piston to expel air. Contrast this lack of structure with the unrelated actuator 180 used to release nested medication modules. That "actuator 180, which may be in the form of a foot pedal, includes a pivot rod 182. When the foot pedal 180 is depressed, the pivot rod 182 is configured to rotate within rings 192 from a resting position to an active position, thereby activating the first locking mechanism 170." *Id.*, 12:45-49. Conversely, the Specification's absence of a disclosure regarding any mechanical or other components of actuator 440 cause the gas driven piston 432 to expel air is merely another way to state that *any* means for causing the gas driven piston to expel air will do. Because the claimed actuator conveys no physical or structural component to provide structural context for determining the characteristics of the actuator other than to describe its function, the limitations of 35 U.S.C. § 112(6) should apply. *See Welker Bearing Co. v, PHD, Inc.*, 550 F.3d 1090, 1096 (Fed. Cir. 2008).

Capsa's proposed definition reinforces this point. It proposes "a *mechanism* to activate or control equipment." The term "mechanism is simply a nonce word or a verbal construct that is not recognized as the name of structure and is simply a substitute for the term means for." *Welker Bearing Co.* 550 F.3d at 1096 (Fed. Cir. 2008). That Capsa seeks to substitute "actuator" with a well-known term to invoke means plus function limitations reinforces that "actuator" as used in the '668 and '650 patent invokes the statutory construction provided under § 112(6). That Capsa adorns the construction with "e.g., by use of pneumatic, hydraulic, or electronic signals" does not refute the point. By including "e.g.," Capsa seeks no bounds to their interpretation of structures covered by an actuator. Anything goes, so to speak. The Court should determine the term "actuator for controlling the driver" is a means plus function limitation under 35 U.S.C. § 112(6).

b. The term "actuator for controlling the driver" is indefinite

"Once a court concludes that a claim limitation is a means-plus-function limitation, two steps of claim construction remain: 1) the court must first identify the function of the limitation; and 2) the court must then look to the specification and identify the corresponding structure for that function." *Biomedino, LLC v. Waters Techs. Corp.*, 490 F.3d 946, 950 (Fed. Cir. 2007). "If there is no structure in the specification corresponding to the means-plus-function limitation in the claims, the claim will be found invalid as indefinite." *Id.; see also Med. Instrumentation & Diagnostics Corp. V. Elekta AB*, 344 F.3d 1205, 1211 (Fed. Cir. 2003) ("If the specification is not clear as to the structure that the patentee intends to correspond to the claimed function, then the patentee has not paid the price but is attempting to claim in functional terms unbounded by any reference to structure in the specification.").

Here, the function of the actuator is clear from the claims: it is "for controlling the driver." Ex. A, 15:24, 15:44; Ex. B, 14:35. And as explained *supra*, the Specification never discloses how this is done. Button 444 causes the gas driven piston 432 to expel air when a user pushes on or lifts the work platform, but the structure of how this function is performed is never disclosed. Ex. A, 9:4-7; Ex. 10, ¶¶ 30-33. Figures 9A and 9B identify a callout for part number 424—which would appear to be involved in connecting the actuator to the driver—but the Specification *never* describes what part number 424 is. The Specification merely employs a nondescript button 444 and a nondescript connector 442. Ex. 10, ¶ 30. Furthermore, the Specification emphatically does *not* explain or even suggest that connector 442 is capable of transmitting any kind of "pneumatic, hydraulic, or electronic signals" as asserted in Capsa's proposed construction. *Id.*, ¶ 34.

To the extent that Capsa argues gas pistons are well known and that a person of ordinary skill would understand how to control the driver from the Specification, that is not enough to render the claims definite. "[C]onsideration of the understanding of one skilled in the art in no way

relieves the patentee of adequately disclosing sufficient structure in the specification." *Amtel Corp. v. Info. Storage Devices, Inc.*, 198 F.3d 1374, 1380 (Fed. Cir. 1999). "A proper indefiniteness analysis "asks first whether structure is described in the specification, and, if so, whether one skilled in the art would identify the structure from the description." *Id.*, at 1381. The Specification discloses no such structure. The court should therefore find the claims indefinite.

c. Capsa's construction lacks support in the intrinsic record

Finally, Capsa's proposed construction seeks to extend the term "actuator" beyond any reasonable interpretation of how one of ordinary skill in the art would understand the term in view of the claims and Specification. Capsa seeks to construe "actuator" as "a mechanism" that employs "electrical signals" because it wants the term to read on a computer interface. But a POSITA would interpret the gas driven piston (driver) disclosed in the Specification to require mechanical control. Ex. 10, ¶ 34. No part of the disclosure suggests that the claimed driver could be activated or controlled by electronic signals. *Id.* Furthermore, nothing in the Specification discloses the actuator controlling anything with "pneumatic, hydraulic, or electronic signals." *Id.* Capsa's proposed construction is untethered to anything within the written description or prosecution history, and the Court should not adopt it. *See Eon Corp. IP Holdings v. Silver Spring Networks*, 815 F.3d 1314, 1320 (Fed. Cir. 2016) ("A party is, therefore, 'not entitled to a claim construction divorced from the context of the written description and prosecution history.'" (quoting *Nystrom v. TREX Co., Inc.*, 424 F.3d 1136, 1144–45 (Fed. Cir. 2005))).

11. "drawer slides"

Plaintiff's Proposal	Defendant's Proposal
Plain and ordinary meaning	Plain and ordinary meaning (i.e., elongate stationary drawer rails and corresponding elongate rail runners configured to support a drawer for sliding movement between a closed position and an open position). '668 patent cl. 3

No accused product includes drawer slides. Rather than concede noninfringement of the claim 3 of the '668 patent, Capsa intends to argue that Howard's products contain "equivalents" to drawer slides. Both parties agree the plain and ordinary meaning of "drawer slides" should apply here, but Capsa refuses to agree the Specification provides the plain and ordinary meaning.[5] The implication is clear. Capsa does not seek the plain and ordinary meaning of "drawer slides," but rather seeks to pursue infringement reads without a proper doctrine of equivalents analysis for the specifically claimed "drawer slides." The Specification also supports Howard's proposal, depicting a specific structure when it describes "drawer slides" that matches Specification's description of drawer slides as "conventional drawer rails formed of stationary drawer rails 423 and corresponding rail runners 425." Ex. A, 8:39-41. The Specification goes on to explain that the "stationary drawer rails 423 may be provided with ball bearings to facilitate movement of the rail runners 425." *Id.*, 8:46-48. Howard's construction aligns with the plain and ordinary meaning of "drawer slides," which is confirmed by Specification to include drawer rails and rail runners.

Howard's expert supports this position. According to Mr. Smith, a POSITA would understand the term drawer slides to convey a specific structure: drawer rails and rail runners of

[5] During the meet and confer regarding proposed constructions held on April 12, 2023, Capsa refused to explain why it disagreed that Howard's proposed construction.

the type commonly used to support drawers. See Ex. 10, ¶¶ 36-39. Accordingly, Howard's construction provides the plain and ordinary meaning of "drawer slides," and the Court should adopt Howard's construction.

12. "wherein the height adjustment mechanism is configured to releasably lock the work platform at a plurality of heights" / "wherein the height adjustment mechanism is configured to releasably position the work platform at a plurality of heights"

Plaintiff's Proposal	Defendant's Proposal
"releasably lock" means to releasably fix or hold in place. The other terms, not otherwise construed herein, should be afforded their plain and ordinary meaning.	Wherein the height adjustment mechanism secures the work platform at a plurality of heights via a biased pin, latch, or other mechanical impediment to movement. '668 patent cl. 3, 4; '650 patent cl. 1

The Court should construe the terms "releasably lock" and "releasably position" to give full weight to these terms. The claims require the height adjustment mechanism to *releasably* lock and *releasably* position the work platform at a plurality of heights, not to merely lock or position it. Howard's proposed construction clarifies what the claims require: a mechanical impediment to movement such as a biased pin or latch. In other words, some locking mechanism must be motivated (biased) to afford weight to the term "releasably." Capsa's proposed construction glosses over this requirement entirely. It merely repeats the term "releasably" in the construction, in the apparent hope that the jury will give the term no weight. The Court should therefore adopt Howard's construction.

The Specification describes the term "releasably locked" in two contexts, both relevant here. In one instance, the Specification describes that the "work platform 340 can be releasably locked" between a lowest position and a highest position "when button 444 is released." Ex. A, 9:16-22. Similarly, "when the work platform 340 is raised it may be releasably locked at any position between the lowest position and the height position by releasing the button 444." *Id.*, 9:31-

35. As discussed *supra*, the Specification fails to disclose sufficient structure for the actuator or its button 444 to *control the driver*, rendering the claims indefinite. But the Specifications' separate releasable locking mechanism 1000 for the sliding work surface describes the types of mechanical devices that a person of ordinary skill in the art would understand the term releasably lock (or releasably position) invokes in the height adjustment mechanism.

Though distinct from the height adjustment mechanism, the Specification describes a *releasable locking mechanism* 1000 to hold the work surface in a position and "prevent it from sliding unintentionally." *Id.*, 6:20-23. This mechanism is shown in Fig 3C below:

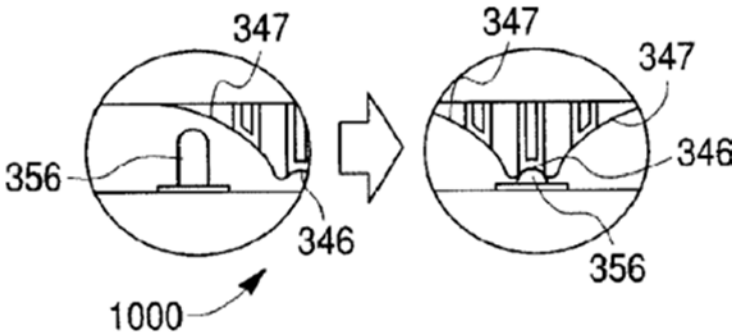

Id., Fig. 3C. When the work surface is pushed onto the work platform, the moveable pin 356 is pushed down into the work platform until it extends upward to nesting region 346. *Id.*, 6:30-35. The Specification explains that the moveable pin is *biased* in an upward direction, the very term Howard proposes to describe the term. *Id.*, 6:27-30 ("[M]oveable pin 356 [] may be, for example, a ball spring plunger that is *spring-biased* in upward direction (i.e., toward the work surface 350.") (emphasis added)). Thus, the Specification's use of "releasably lock" in other contexts supports Howard's construction.

The underlying provisional application further supports Howard's construction. In an invention disclosure statement in provisional application 60/484,658, the inventor describes a "locking feature to lock platform at intervals throughout 15" range. Ex. 2 at 4. The inventor

depicted a locking feature in the form of a torsion spring, cam, and pin where the spring biases the pin to engage the lock:

3. How did you solve that problem? In other words, describe what you consider to be the invention. Include sketches or drawings and examples in addition to a written description. Also provide pertinent experimental data. Attach sheets if necessary.

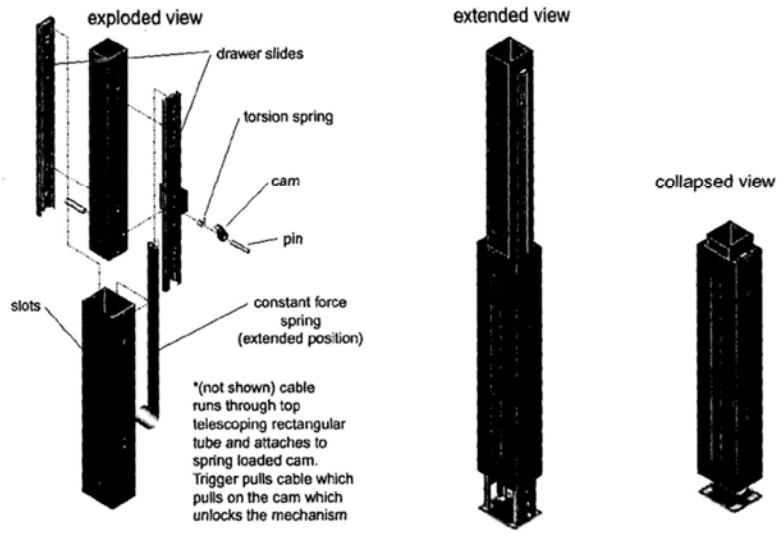

Id. at 5; *see also id.* at 6 (referring to "locking mechanism (cam and torsion spring)"). Thus, the related provisional application's description of the locking feature reveals the invention intended the term "releasably lock" to secure the platform with a biased pin, latch, or other mechanical impediment to movement. *See Trustees of Columbia University in City of New York*, 811 F.3d at 1365 (relying on limiting statements in provisional application to affirm construction of the term "byte sequence feature") ("Further, the provisional application similarly defined byte sequence feature, stating that '[t]he byte sequence feature is the most informative because it represents the machine code in an executable instead of resource information' which is not made of machine code instructions.'") *see also Advanced Display Sys., Inc.*, 212 F.3d at 1282 (Provisional applications incorporated by reference are "effectively part of the" specification as though it was "explicitly contained therein.").

The extrinsic evidence further supports Howard's construction. The American Heritage College dictionary defines "lock" as "to engage and interlock securely so as to be immobile," which supports Capsa's construction of the term to "secure[] the work platform." Ex. 7, The American Heritage College Dictionary, Third ed., (796) 1997. The Court should give full scope to the term "releasably lock" as used in the Specification and adopt Howard's proposed construction.

B. U.S. Patent No. 8,109,527

1. "track"

Plaintiff's Proposal	Defendant's Proposal
A mechanical component that another component slides or rolls along	An elongate guide, supported along its length, for guiding a runner. '527 patent cl. 1, 2, 5

First, the context of the claims themselves align with Howard's construction and not Capsa's construction. *See Phillips*, 415 F.3d at 1314 ("the context in which a term is used in the asserted claim can be highly instructive"). For example, claim 1 recites "a first track supported by the support structure … [and] a first arm supported on said first track for linear movement in a first direction." Ex. C, cl. 1. But Capsa's proposed construction, "a mechanical component that another component slides or rolls along," does not align with this additional language of claim 1. For example, Capsa proposes that "track" merely corresponds to "a mechanical component," attempting to broaden the term by generically referring to what "another component" can do in relation to it. Claim 1, however, already provides that the "first track [is] supported by the support structure" and the "first arm [is] supported on said first track for linear movement in a first direction." *See* Ex. C, cl. 1.

Moreover, Capsa's proposed construction conflates the Specification's uses of "components" to discuss things that are not related to a track. *See Markman*, 52 F.3d at 979

("Claims must be read in view of the specification, of which they are a part."). In the Specification, for example, "other cart components [include] a monitor 8, a user input device such as a keyboard and mouse 10, a work platform 14 and storage bins 16." Ex. C, 2:15-19. These "components" are unrelated to the use of track, and use of the term here would only serve to introduce ambiguity into the claim. Indeed, the '527 patent explains that a "mouse may be supported on keyboard tray 20," which has a "primary support surface 22." *Id.,* 2:19-29. Thus, under Capsa's construction, a mouse sliding on the support surface would qualify the support surface as a "track" because it is a mechanical component (support surface) that another component (the mouse) slides along. This is clearly inconsistent with the inventors' use of the word "track" in the claims and supporting disclosure of the '527 patent.

Howard's construction, by contrast, remains consistent with the claims, Specification, and drawings. *Nazomi Commc'ns, Inc. v. Arm Holdings, PLC*, 403 F.3d 1364, 1368 (Fed. Cir. 2005) ("[t]he patent's intrinsic record is the primary tool to supply the context for interpretation of disputed claim terms.").

As the Specification explains:

> Each plate is connected to a runner 28 that is supported in a horizontally extending track 30 such that the runner 28 can slide in the track 30 to move the tray horizontally from a retracted position (FIG. 4) to an extended position (FIG. 5). ***Each track 30 includes vertically spaced channels 32 and 34 that extend for substantially the length of the tracks 30***. Each runner 28 includes a first flange 28a that extends into the upper channel 32 and a second flange 28b that extends into the lower channel 34. The flanges 28a and 28b slide ***in the channels 32 and 34 to allow the runners to move horizontally in the tracks 30***.

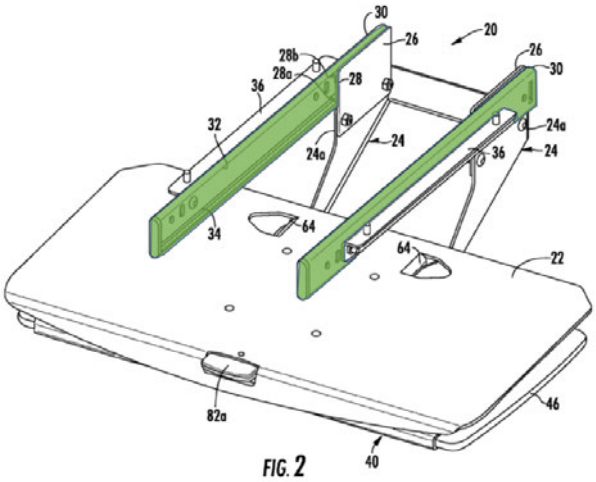

FIG. 2

Ex. C, 2:34-45 (emphasis added). The claims also recite a "second track," but unlike Capsa's proposed construction, Howard's proposed construction remains equally consistent with the Specification. *See id.*, cl. 2 ("The cart of claim 1 further including a second track supported by said support structure and a second arm supported on said second track"); cl. 5 ("The cart of claim 1 wherein said second platform is mounted in a second track."). For example, the Specification continues, "[t]he plate 40 is formed with two parallel tracks 42 ***that extend the length of plate 40*** and are arranged substantially perpendicular to the direction of tracks 30." *Id.*, 2:63-65 (emphasis added). Lastly, Merriam-Webster's Collegiate Dictionary defines "track" consistent with Howard's proposed construction: "a usually metal way (as a groove) serving as ***a guide***." Ex. 12, Merriam-Webster's Collegiate Dictionary, Eleventh ed., 1324 (2007).

2. "platform"

Plaintiff's Proposal	Defendant's Proposal
A substantially flat raised area or structure.	Plain and ordinary meaning '527 patent cl. 1, 3, 4, 5, 6.

The '527 patent claims recite, inter alia, that the claimed cart includes a "first platform…pivotable between a first position and a second position" and "second platform mounted for linear movement in a second direction disposed substantially perpendicular to [a] first direction wherein said first platform is mounted." Ex. C, cl. 1. "Platform" is a common noun with a well understood- meaning in the claims. "The words of a claim are given their ordinary and customary meaning as understood by a person of ordinary skill in the art when read in the context of the specification and prosecution history." *Thorner*, 669 F.3d at 1365 (citing *Philips*, 415 F.3d at 1313).

Capsa's proposal, however, is not consistent with the claim language. For example, Capsa's construction requires a "raised" platform despite neither the claims nor the Specification ascribing any such characteristic to claimed "platform." Indeed, Capsa's proposed construction would render claim 6 more confusing, given it would require a "raised" platform be "pivotable between a raised position and a lowered position." *See* Ex. C, cl. 6; *see also id.*, 3:33-36; 4:11-17.

Indeed, Capsa's proposed construction that the platform needs to be "a substantially flat raised area or structure" adds confusion where none existed. For example, courts have found that the word "substantially" adds confusion when, as here, the Specification provides no guidance on the boundaries of its use. *See Deering Precision Instruments, L.L.C. v. Vector Distribution Sys., Inc.*, 347 F.3d 1314, 1322 (Fed. Cir. 2003) ("Reference to dictionaries and our cases indicates that the term "substantially" has numerous ordinary meanings"); *Thorn EMI N. Am., Inc. v. Intel Corp.*, 936 F. Supp. 1186, 1198 (D. Del. 1996), *aff'd sub nom. EMI Grp. N. Am., Inc. v. Intel Corp.*, 157

F.3d 887 (Fed. Cir. 1998) ("[t]he word "substantially" tends to become somewhat of a chameleon when it appears in patent claims"). Thus, Capsa's proposed construction falls short for this additional reason.

Nothing in the intrinsic record departs from the terms customary meaning. Thus, the Court should adopt the plain and ordinary meaning. *See 3M Innovative Properties Co. v. Tredegar Corp.*, 725 F.3d 1315, 1329 (Fed. Cir. 2013) ("It is axiomatic that we will not narrow a claim term beyond its plain and ordinary meaning unless there is support for the limitation in the words of the claim, the Specification, or the prosecution history. . . . [O]ur cases do not support prescribing a more particularized meaning unless a narrower construction is required by the specification or prosecution history."). Capsa's construction adds confusion to a well-understood term and is inconsistent with the intrinsic evidence. Thus, the court should reject Capsa's construction and adopt the plain and ordinary meaning.

3. "arm"

Plaintiff's Proposal	Defendant's Proposal
A component that projects from a device for supporting or holding another component.	A slender part that projects from a supported end. '527 patent cl. 1, 2, 6.

Howard's proposed construction, "a slender part that projects from a supported end" is supported by the claims and expressly disclosed embodiment of "arm 24" in the Specification. Claim 1 recites, inter alia, that a "first arm [is] supported on [a] first track," and claim 2 similarly

recites a "second arm [is] supported on [a] second track." Ex. C, claim 1-2. And referring to Fig. 4 and "arm 24," the Specification depicts a slender part projecting from its supported end:

> Each Support **arm 24** has a first end 24a that is Supported from a plate 26. Each plate is connected to a runner 28 that is supported in a horizontally extending track 30 such that the runner 28 can slide in the track 30 to move the tray horizontally from a retracted position (FIG. 4) to an extended position (FIG. 5).

Id., 2:32-38.

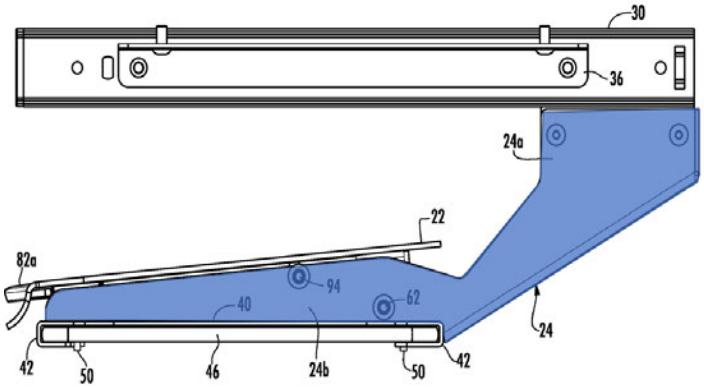

Id., Fig. 4. The Specification continues, further explaining:

> Each Support **arm 24** has a second end 24b that extends below and towards the front of the tracks 30 such that the primary support surface 22 is located below the tracks 30 a sufficient distance to allow a keyboard and/or other devices to be supported on surface 22 and fit beneath the tracks 30 when the arms are in the retracted position.

Id., 2:54-59. The "first end 24a is supported from plate 26" (a supported end) and the "second end 24b … extends below and towards the front of the tracks 30" (a slender part that projects). Thus, Howard's construction is consistent with the intrinsic record.

Lastly, extrinsic evidence further support's Howard's proposed construction. Merriam-Webster's Collegiate Dictionary defines arm as "*a slender part* of a structure, machine, or an instrument *projecting* from a main part, axis, or fulcrum. Ex. 12, Merriam-Webster's Collegiate

Dictionary, Eleventh ed., 67 (2007). Accordingly, Capsa's attempt to broaden the claim term arm should be rejected and Howard's construction adopted.

Capsa's construction, however, ignores the claims and the rest of the intrinsic record by stating that the arm projects "from a device." The claims specifically identify that "a first arm [is] supported on said first track," not "from a device." Ex. C, cl. 1; *see also id.*, Fig. 4 (depicted above). Furthermore, the term "device" is used in the Specification four times and never in reference to "arm (24)." *See id.*, 2:18-19 ("user input device such as a keyboard or mouse"); 2:44-45 ("Bearings or other devices"); 2:57-58 ("keyboard and/or other devices"); 3:10-11 ("a mouse or other user input device"). Capsa's construction that the arm projects "from a device" is inconsistent with the claims and the entire intrinsic record.

Capsa also tries to broaden the term by explaining the alleged purpose of the arm as "for supporting or holding another component." The patent's claims unambiguously identify what the arms are for, rendering Capsa's proposed construction unnecessary and confusing. *See id.*, cl. 1 ("said first arm supporting a first platform"; "said first arm supporting a second platform"). Similarly, Capsa proposes "supporting or holding" in its definition of arm, while the claims only contemplate supporting. *Id*. ("said first arm *supporting* a first platform"); ("said first arm *supporting* a second platform"). Capsa's proposal fails to provide clarity to the meaning of "arm" because it conflicts with the clear language of the claims. Moreover, Capsa attempts to improperly broaden the term beyond what the Specification will support. Like with the term "track," Capsa attempts to redefine the term "arm" with the overly broad "component." However, as described above, the Specification identifies cart components as monitors, user input devices such as a keyboard and mouse, work platforms, and storage bins, but not "arms (24)." *See id.*, 2:15-19.

4. "substantially coextensive"

Plaintiff's Proposal	Defendant's Proposal
Plain and ordinary meaning or in the alternative Occupying approximately the same space or period of time.	Dimensioned such that it effectively doubles the work area available to the user when extended. '527 patent cl. 4.

Howard's construction comes directly from the intrinsic record. First, claim 4 of the '527 patent reads "[t]he cart of claim 1 wherein said second platform is substantially coextensive with the first platform." *Id.*, cl. 4. "The intrinsic record in a patent case is the primary tool to supply the context for interpretation of disputed claim terms." *V-Formation, Inc. v. Benetton Grp. SpA*, 401 F.3d 1307, 1310 (Fed. Cir. 2005). Further, "[s]ince the term 'substantially' is capable of multiple interpretations, we turn to the intrinsic evidence to determine which interpretation should be adopted. *Deering Precision Instruments, L.L.C.*, 347 F.3d at 1323. The Specification refers to "substantially coextensive" once and unambiguously supplies the context for interpreting the claim term. It states "[t]he secondary work platform 46 is dimensioned to be substantially coextensive with the primary work platform 22 *such that when it is extended it effectively doubles the work area available to the user*." Ex. C, 3:12-16 (emphasis added). Howard's construction comes directly from the Specification and should be adopted by the Court.

By contrast, Capsa's construction ignores the intrinsic record and leads to another nonsensical construction. "The customary meaning of a claim term is not determined in a vacuum and should be harmonized, to the extent possible, with the intrinsic record, as understood within the technological field of the invention." *Lexion Med., LLC v. Northgate Techs., Inc.*, 641 F.3d 1352, 1356 (Fed. Cir. 2011). Here, Capsa uses a dictionary definition that has a meaning wholly unrelated to the technological field of the invention. Specifically, Capsa's definition would include

"occupying approximately the same space or *period of time*." (Emphasis added). The '527 patent does not relate to any "period of time" and should not be construed to include such definitions. *See AIA Eng'g Ltd. v. Magotteaux Int'l*, 657 F.3d 1264, 1276 (Fed. Cir. 2011) ("We strive, where possible, to avoid nonsensical results in construing claim language.").

C. U.S. Patent No. 9,039,016

1. "means for automatically adjusting a height of the platform"

Plaintiff's Proposal	Defendant's Proposal
This is a 112(6) means-plus-function limitation. The disclosed structure for performing the claimed function of "automatically adjusting a height of the platform" is: <u>Embodiment 1 structure:</u> processor, height adjustment mechanism (where the processor is programmed to retrieve stored user height based on User ID and use the stored height to control the height adjustment mechanism to automatically adjust the height of the work platform to a corresponding predetermined height). <u>Embodiment 2 structure:</u> processor, sensor, height adjustment mechanism (where the processor is programmed to obtain user height measurements from the sensor and use the sensor measurements to control the height adjustment mechanism to automatically adjust the height of the work platform to a corresponding predetermined height). <u>Embodiment 3 structure:</u> processor, height adjustment mechanism (where the processor is programmed to retrieve a particular user's stored preferred work platform height when the user selects or instructs the processor to automatically adjust the work platform to the user's preferred height and to control the height adjustment	Subject to pre-AIA 35 U.S.C. § 112(6) **<u>Function:</u>** Automatically adjusting a height of the platform. **<u>Structure:</u>** A processor programmed to instruct a motorized lift mechanism to lift or lower the platform by non-manual force to a predetermined ergonomic position selected by the processor based on a given user's physical height input at a control panel or detected by a sensor and received by the processor, which communicates with a database containing a list of potential user heights and predetermined ergonomic positions associated with each of the potential user heights, the predetermined ergonomic position being based on the average distance between the eyes and elbows of a person having the given user's physical height. '016 patent, cl. 20.

mechanism to automatically adjust the height of the work platform to the user's stored preferred height).	

The parties agree that this term invokes means-plus-function language. The Court must therefore determine "what structure, if any, disclosed in the specification corresponds to the claimed function." *Williamson,* 792 F.3d at 1351. The Court should accept Howard's proposed structure because it accurately captures the '016 patent's disclosed structure for the claimed function, "automatically adjusting a height of the platform." Capsa proposes an unsupported construction that runs contrary to the '016 patent's express goals. Further, Capsa's proposed structures are unhelpful because they merely reuse the disputed term in the definition and ignore the structure necessary to perform the claimed function.

"In order to qualify as corresponding structure, the structure must not only perform the claimed function, but the specification must clearly associate the structure with performance of the function." *Cardiac Pacemakers, Inc. v. St. Jude Med., Inc.*, 296 F.3d 1106, 1113 (Fed. Cir. 2002). Capsa's third embodiment ignores that the Specification fails to disclose the proposed structure, much less "clearly associate the structure" with "automatically adjusting the height of the platform." Indeed, Capsa's third proposed embodiment proposes that the processor merely retrieves a "user's stored preferred work platform height." Such a proposal, however, ignores the claims' requirement that "automatically adjusting a height of the platform" corresponds to an optimal ergonomic positioning of the work surface based on the user's height.

For example, the Specification stresses that "ergonomic features are important for mobile accessory carts." Ex. D, 1:15-16. The '016 patent explains, however, that "users are not making the necessary adjustments to mobile accessory carts" to obtain "optimal ergonomic positioning." *Id.*, 1:25-26, 1:31-39, 11:38-39. And "in rare situations in which users do make adjustments to a mobile accessory cart they are often not ergonomically correct for the particular user." *Id.*, 34-36.

Thus, the inventors sought to provide a solution where the user can adjust the platform height "to the predetermined platform height" appropriate for the user's height for optimal (or at least neutral) ergonomic positioning. *Id.*, 9:58-10:15, 11:39-45, 11:56-61. Therefore, Capsa's third embodiment does not include the necessary structure for "automatically adjusting the height of the platform" because it fatally lacks a solution to the very problem the '016 patent set out to solve.

Finally, Howard's proposed construction encapsulates Capsa's proposed first and second embodiments, but with even more corresponding detail. Indeed, Howard's proposed construction recognizes the disclosed need for a height input (i.e., stored user height based on user ID) or sensor detection (i.e., user height measurements from a sensor) to "automatically adjust[] a height of the platform." Therefore, the Court should adopt Howard's construction for this additional reason.

When construing structure in a means plus function claim, "corresponding structure must include all structure that actually performs the recited function." *Cardiac Pacemakers*, 296 F.3d at 1109. Further, corresponding structure can be identified by looking in the specification for structure "necessary to perform the claimed function." *Omega Eng'g, Inc, v. Raytek Corp.*, 334 F.3d 1314, 1321 (Fed. Cir. 2003). Capsa's proposed structure fails to include structure that is necessary for performing the claimed function. Instead Capsa's construction only states that the structure "control[s] the height adjustment mechanism to automatically adjust the height of the work platform to a corresponding predetermined height" but does not include the structure that actually performs this adjustment or the structure that determines the predetermined height, even when this structure is expressly stated in the Specification. Ex. D, 9:7-57, 10:16-12:2.

Howard's proposed structure, on the other hand, incorporates all structure that executes the function. For example, Howard's construction includes structure for adjusting the height (through a motorized lift mechanism using a non-manual force) and for determining a predetermined height

(using a database containing a list of potential user heights and predetermined ergonomic positions associated with each of the potential user heights). Therefore, the Court should accept Howard's proposed structure because it includes all elements that are necessary to perform the recited function of automatically adjusting a height of the platform.

At bottom, Howard's proposed structure comes directly from the Specification. The '016 patent expressly defines "automatically adjustable":

> As used in the specification and claims, "automatically adjustable" is defined as ***being moveable by a non-manual force to a predetermined position, the predetermined position being based on information obtained by or contained within a device such as a controller, processor, computer, or database***. . . . The predetermined ergonomic position of the height adjustment mechanism is based upon the average distance between the eyes and elbows of a person having the input height.

Id., 9:11-24 (emphasis added). The '016 patent later explains how the controller, processor, and database provide the underlying structure to accomplish this function:

> As shown in FIG. 8, the work platform 106 can include a control panel 130 that is in communication with a processor (not shown) ***and the processor in turn is in communication with a database that contains a list of possible user heights and the predetermined ergonomic positions associated with each of the possible heights***.

Id., 9:7-24 (emphasis added).

Accordingly, Howard's proposed structure imparts the '016 patent's own definition. *Vitronics Corp.*, 90 F.3d at 1582 ("[t]he specification acts as a dictionary when it expressly defines terms used in the claims"). Capsa's proposed structure, on the other hand, only repeats the disputed term itself and seeks to include a structure for "automatically adjusting" clearly unsupported by the Specification. Therefore, the Court should adopt Howard's proposed construction.

VI. CONCLUSION

For the above reasons, the Court should adopt Defendant's constructions.

DATE: May 26, 2023

s/ Michael V. Young

FINNEGAN, HENDERSON, FARABOW, GARRETT & DUNNER, LLP
John M. Mulcahy *admitted pro hac vice*
Email: john.mulcahy@finnegan.com
Michael V. Young *admitted pro hac vice*
Email: michael.young@finnegan.com
Daniel M. Jordan *admitted pro hac vice*
Email: Dan.Jordan@finnegan.com
Deanna Smiley *admitted pro hac vice*
Email: Deanna.Smiley@finnegan.com
1875 Explorer Street, Suite 800
Reston, VA 20190-6023
Telephone: (571) 203-2700
Facsimile: (202) 408-4400

Elizabeth D. Ferrill *admitted pro hac vice*
Email: elizabeth.ferrill@finnegan.com
Kelly S. Horn *admitted pro hac vice*
Email: kelly.horn@finnegan.com
Connor M. McGregor *admitted pro hac vice*
Email: connor.mcgregor@finnegan.com
901 New York Ave., N.W.
Washington, D.C. 20001-4413
Telephone: (202) 408-4000
Facsimile: (202) 408-4400

Yinan Liu *admitted pro hac vice*
Email: yinan.liu@finnegan.com
Two Seaport Lane
Boston, MA 02210-2001
Telephone: (617) 646-1600
Facsimile: (202) 408-4400

RICHARD LEWIS YODER, JR. MSB #100312
Email: lewyoder@laurellaw.com
Gilchrist Sumrall Yoder Yoder & Leggett, PLLC
415 North Magnolia Street, Suite 400
P.O. Box 106
Laurel, MS 39441
Telephone: (601) 649-3351
Facsimile: (601) 426-9625

Attorneys for Defendant
Howard Industries, Inc.

CERTIFICATE OF SERVICE

I, the undersigned, do hereby certify that I have this day filed a true and correct copy of the above and foregoing document using the Court's ECF electronic filing system, which sent notification of said filing and the foregoing document was served via electronic mail on the following counsel of record:

COUNSEL FOR PLAINTIFF CAPSA SOLUTIONS LLC

Matthew D. Miller (MSB #99210)
COPELAND, COOK, TAYLOR, AND BUSH, PA
P.O. Box 17619
Hattiesburg, MS 39404
110 Sheffield Loop
Hattiesburg, MS 39402
Telephone: (601) 264-6670
Facsimile: (601) 264-5660
Email: mmiller@cctb.com

-and-

Jeffrey S. Standley (Ohio Bar #0047248)
James L. Kwak (Ohio Bar #0066485)
F. Michael Speed, Jr. (Ohio Bar #0067541)
Admitted Pro Hac Vice
STANDLEY LAW GROUP LLP
6300 Riverside Drive
Dublin, Ohio 43017
Telephone: (614) 792-5555
Facsimile: (614) 792-5536
Email: jstandley@standleyllp.com
jkwak@standleyllp.com
mspeed@standleyllp.com
litigation@standleyllp.com

THIS, the 26th day of May 2023.

s/ Michael V. Young
Michael V. Young *admitted pro hac vice*