IN THE UNITED STATES DISTRICT COURT
FOR THE SOUTHERN DISTRICT OF MISSISSIPPI
EASTERN DIVISION

CAPSA SOLUTIONS LLC **PLAINTIFF**

VERSUS **CIVIL ACTION NO. 2:22-cv-00065-HSO-BWR**

HOWARD INDUSTRIES, INC. **DEFENDANT**

PLAINTIFF CAPSA'S REPLY CLAIM CONSTRUCTION BRIEF

Pursuant to the Court's Case Management Order, Dkt. No. 26, and the Addendum Regarding Patent Disclosures and Claim Construction Schedule ("Addendum Schedule"), Dkt. 26-1, Plaintiff Capsa Solutions LLC ("Capsa") hereby submits its Reply Claim Construction Brief with respect to the claim terms from U.S. Patent Nos. 7,594,668 ("the '668 patent"), 8,215,650 ("the '650 patent"), 8,109,527 ("the '527 patent"), 9,039,016 ("the '016 patent"), and D762,339 ("the D'339 patent") (collectively, "the Asserted Patents" or "Patents-in-suit").

RESPECTFULLY SUBMITTED, this the 16th day of June, 2023.

CAPSA SOLUTIONS LLC

BY: */s/ James L. Kwak*
JAMES L. KWAK

Jeffrey S. Standley (Ohio Bar #0047248)
James Lee Kwak (Ohio Bar #0066485)
F. Michael Speed, Jr. (Ohio Bar #0067541)
Standley Law Group LLP
6300 Riverside Drive
Dublin, Ohio 43017
Telephone: (614) 792-5555
Facsimile: (614) 792-5536
Email: jstandley@standleyllp.com
jkwak@standleyllp.com
mspeed@standleyllp.com
litigation@standleyllp.com

Matthew D. Miller (MSB #99210)
Copeland, Cook, Taylor, and Bush, PA
P.O. Box 17619
Hattiesburg, MS 39404
110 Sheffield Loop, Hattiesburg, MS 39402
Telephone: (601) 264-6670
Facsimile: (601) 264-5660
Email: mmiller@cctb.com

Attorneys for Plaintiff
Capsa Solutions LLC

TABLE OF CONTENTS

I. Introduction 1

II. Relevant Background Discussion Relevant to the ’650 and ’668 Patents 1

A. Overview of Some Example Claims Asserted from the ’650 Patent 1

B. Technical Discussion Relating to How Gas Driven Pistons Work 3

III. Disputed Claim Constructions 6

A. Disputed Claim Terms from the ’650 and ’668 Patents 6

1. “height adjustment mechanism” 6

2. “driver” 7

3. “actuator” 12

4. “releasably lock” 17

5. “work platform” 18

6. “movable platform” 19

7. “work surface” 21

8. “wherein the work surface is movable” 27

9. “compartment(s)” 27

10. “at least one compartment,” “disposed above the compartment(s)”/ “disposed above a top of the at least one compartment” 28

11. “drawer slides” 31

B. Disputed Claim Terms from the ’016 Patent 32

1. “means for automatically adjusting a height of the platform” 32

C. Disputed Claim Terms for the ’527 Patent 33

1. “platform” 33

2. “track” 34

3. "arm" 34

4. "substantially coextensive" 35

TABLE OF AUTHORITIES

Cases **Pages**

01 Communique Lab., Inc. v. Logmein, Inc., 687 F.3d 1292, 1296 (Fed. Cir. 2012).....7

3M Innovative Props. Co. v. Avery Dennison Corp., 350 F.3d 13656, 1373-74 (Fed. Cir. 2003).....19

ActiveVideo Networks, Inc. v. Verizon Communs., Inc. 801 F. Supp. 2d 465, 486 (E.D. Va. 2011).....25

Advanced Aero. Techs., Inc. v. United States, 122 Fed. Cl. 445, 477-79 (2015) 14

Ansell Healthcare Prods. LLC v. Reckitt Benckiser LLC, 2017 U.S. Dist. LEXIS 38297, at * *6-7 (D. Del. Mar. 16, 2017).....33

Bell Atl. Network Serv. v. Covad Communs. Grp., 262 F.3d 1258, 1270-75 (Fed. Cir. 2001) .9, 23

Broadband, Inc. v. Corning Optical Communs. RF, LLC., 815 F.3d 747, 755 (Fed. Cir. 2016).....31

Cree, Inc. v. SemiLEDs Corp., 2012 U.S. Dist. LEXIS 39582, at *56 (D. Del. Mar. 21, 2012).....33

David Netzer Consulting Eng. LLC v. Shell Oil Co., 824 F.3d 989, 994 (Fed. Cir. 2016) 8

Deere & Co. v. Bush Hog, LLC, 703 F.3d 1349, 1359 (Fed. Cir. 2012).....33

Edgewell Pers. Care Brands, LLC v. Albaad Massuot Yitzhak, Ltd., Civil Action No. 15-1188-RGA, 2017 U.S. Dist. LEXIS 70242, at *5-6 (D. Del. May 9, 2017).....33

Finjan LLC v. ESET, LLC, 51 F. 4th 1377, 1382 (Fed. Cir. 2022) 24

Finjan, Inc. v. Qualys Inc., No. 4:18-cv-07229-YGR, 2020 U.S. Dist. LEXIS 103337, at *18 (N.D. Cal. June 11, 2020).....8

Greenberg v. Ethicon Endo-Surgery, Inc., 91 F.3d 1580 (Fed. Cir. 1996).....14

Honeywell Int'l, Inc. v. ITT Indus., 452 F.3d 1312, 1318-19 (Fed. Cir. 2006) 9

Howmedica Osteonics Corp. v. Wright Medical Technology, Inc., 540 F.3d 1337, 1347, 1352 (Fed. Cir. 2008) 30, 31

In re Maxim Integrated Prods., Inc., No. 12-244, 2013 U.S. Dist. LEXIS 177758, at *40-41 (W.D. Pa. Dec. 17, 2013) 9

Luminara Worldwide, LLC v. Liown Elecs. Co., 814 F.3d 1343, 1353 (Fed. Cir. 2016).....8

Maxell Ltd. v. Huawei Device USA Inc., 297 F. Supp. 3d 668, 746-48 (E.D. Tex. 2018).....14

Modine Mfg. Co. v. U.S. Int'l Trade Comm'n, 75 F.3d 1545, 1553 (Fed. Cir. 1996).....24

Openwave Sys. v. Apple Inc., 808 F.3d 509, 514 (Fed. Cir. 2015).....8

Personalized Media Communs., L.L.C. v. ITC, (Fed. Cir. 1998) 14

Quanergy Sys. V. Velodyne Lidar, Inc., No. 16-cv-052510EJD, 2017 U.S. Dist. LEXIS 164916, at *41 (N.D. Cal. Oct. 4, 2017).....15

Salazar v. Procter & Gamble Co., 414 F.3d 1342, 1345 (Fed. Cir. 2005).....19

Smartphone Techs., LLC v, Research in Motion Corp., Civil Action No. 6:10-CV-74-LED-JDL, 2012 U.S. Dist. LEXIS 19242, at *11 (E.D. Tex. Feb. 13, 2012) 24

Telcordia Techs., Inc. v. Cisco Sys., 612 F.3d 1365, 1377 (Fed. Cir. 2010) 15

Thorner v. Sony Comput. Entm't Am. LLC, 669 F.3d 1362, 1366 (Fed. Cir. 2012).....2

ViiV Healthcare UK Ltd. v. Lupin Ltd., 6 F. Supp. 3d 461, 475 (D. Del. 2013) 7

Williamson v. Citrix Online, LLC, 2015 U.S. App. LEXIS 10082, 2015 WL 3687459 (Fed. Cir. June 16, 2015) 13

Other Authorities:

35 U.S.C. 111(a) 24

35 U.S.C. § 112, para. 6..... 12, 13, 14, 16, 33

Abbreviations

Capsa: Plaintiff, Capsa Solutions LLC

Howard: Defendant, Howard Industries, Inc.

'650 Patent or '650: U.S. Patent No. 8,215,650

'668 Patent or '668: U.S. Patent No. 7,594,668

'527 Patent or '527: U.S. Patent No. 8,109,527

'016 Patent or '016: U.S. Patent No. 9,039,016

D'339 Patent or D'339: U.S. Patent No. D762,339

patents-in-suit: **The '668 patent, the '650 patent, the '527 patent, the '016 patent and, the D'339 patent**

Patentee/Applicant: refers to the entity that filed the patent-at-issue at the Patent Office and prosecuted the application to issuance.

Citations to U.S. Patents will be cited as follows: **Patent Number, col. no.:line nos**. (so for example '650 Patent, col 4:15-22 is a citation to the '650 Patent, column 4 at lines 15-22).

I. Introduction

As discussed in the summary of the law in Plaintiff's opening brief, the party seeking to depart from the plain and ordinary meaning must overcome a heavy presumption that claim terms should be afforded their plain and ordinary meaning. As discussed below, Defendant's definitions are improper as they are not consistent with the intrinsic evidence or the patentee's intent to claim the invention more broadly instead of limiting the invention to the example embodiments described in the Patents-in-suit. Defendant fails to support its narrow definitions with clear and unmistakable evidence in the Patents-at-issue, or associated file histories, demonstrating that the patentee intended to redefine terms with special meanings or disavow/disclaim the full scope of the claim or invention. Defendant consistently fails to overcome the heavy presumption that claim terms are to be given their plain and ordinary meaning and not to limit claim terms to example or preferred embodiments described in the patent. Additionally, Defendant's proposed definitions fail to overcome the presumption that differently worded claims have different scope (legal patent principle of "claim differentiation").

II. Relevant Background Discussion Relevant to the '650 and '668 Patents

A. Overview of Some Example Claims Asserted from the '650 Patent

As discussed in Plaintiff's opening brief, the first place to start in determining the meanings of claim terms are the claims themselves because the claims define the scope of the inventions. Again, each claim is considered to recite a separate invention and there is a presumption that differently worded claims have different scopes or meanings. Although various claims from the '650 and '668 Patent have been asserted against Defendant, Plaintiff reproduces independent claim 1 and dependent claims 7 and 8 from the '650 Patent here for discussion purposes. Claim 1 of the '650 Patent recites one invention to a medical cart. A review of independent claim 1 shows that the patentee claimed the invention of claim 1 as having a "height adjustment mechanism"

What is claimed is:

1. A cart comprising:

a work platform including a work surface and at least one compartment for containing an item within the compartment, wherein the work surface is disposed above a top of the at least one compartment;

a base configured to be movable in at least a rearward direction; and

a height adjustment mechanism for adjusting a height of the work platform relative to the base, wherein the height adjustment mechanism is configured to releasably position the work platform at a plurality of heights, the height adjustment mechanism comprising:

a driver configured to releasably position the work platform; and

an actuator for controlling the driver,

wherein the base includes a portion projecting, relative to the height adjustment mechanism, in a forward direction that is substantially opposite to the rearward direction,

wherein the work platform includes a portion projecting, relative to the height adjustment mechanism, in the forward direction, wherein the compartment is disposed in the portion of the work platform projecting in the forward direction, and the compartment is configured to permit a user facing in the rearward direction to access the item within the compartment,

wherein the actuator is disposed above the compartment and on the portion of the work platform projecting in the forward direction, and

wherein the work surface is movable relative to a remainder of the work platform from an extended position to a non-extended position.

comprising a "driver" but did not limit the claimed invention to any specific type of driver. In other words, the gas driven piston is not recited in independent claim 1. Similarly, claim 1 recites a "work surface" but nowhere in claim 1 does the patentee state that the invention is limited to a "curved" work surface or one large enough to dispense medications or hold work papers. Again, nowhere in independent claim 1 does the patentee limit the invention to a particular shape or size work surface.

It is only in dependent claim 8 (claim 8 depends from claim 1 and adds further limitations to the invention recited in independent claim 1) where the patentee recites that the claimed "driver" of claim 1 includes a gas piston driver that lowers and increases the height of the work platform when the user actuates the actuator (*e.g.*, push-button actuator).

8. The cart of claim **1**, wherein the driver includes a piston that, in response to the user's actuation of the actuator, permits gas to flow out of the piston during lowering of the height of the work platform, and that, in response to the user's actuation of the actuator, permits gas to flow into the piston during increasing of the height of the work platform.

It is only in dependent claim 7 (that also depends from independent claim 1) where the patentee adds the further limitation that the claimed "work surface" of claim 1 is configured to move in an "arcuate" (or curved) path. Thus, based on principles of claim construction (differently worded claims are presumed to have different meanings), there is a presumption that the "driver" broadly recited in independent claim 1 is not limited to the specific type of driver (gas piston driver) recited in dependent claim 8. Similarly, there is a presumption that the "work "surface" broadly recited

7. The cart of claim **1**, wherein the work surface is configured to move in at least one of a leftward direction and a rightward direction along an arcuate path that faces the forward direction.

in independent claim 1 is not limited to a specific "arcuate" (or curved) shape recited in dependent claim 7. Again, the presumption of claim differentiation is the strongest in cases like this where the limitation that is sought to be read into an independent claim already appears in a dependent claim.

B. Technical Discussion Relating to How Gas Driven Pistons Work

Because there seems to be a disagreement between the parties as to how gas driven pistons (e.g., gas springs, gas cylinders, gas struts) operate, Plaintiff has prepared a brief summary discussion on how gas driven pistons work as known to a POSITA. Gas driven pistons have been around for decades before the invention of the '650 and '668 Patents and their operation and design for use in different applications are well known to a POSITA. *See*, Ex. A, para. 4, Reply Declaration of Ben-Tzvi. These are well-known, widely available, off-the-shelf components. *Id*. at para. 5. There are generally two main types of gas driven pistons: 1) open type gas driven pistons that have input and output ports for the flow of gas from and to an external source (*e.g*., gas is pumped in or out of the gas piston cylinder using hose connectors); or 2) closed/sealed type gas driven pistons where the gas inside the piston cylinder is pressurized and sealed and where the stored gas moves internally in and out of the piston cylinder via the opening and closing of the internal valve. *Id*. at para. 6. The type of gas driven piston described in the example embodiments of the '650 and '668 Patents is a closed/sealed type of gas driven piston because there are no input or output gas hoses or ports on the gas driven piston shown in the figures of the '650 Patent. *Id*. at para. 7.

As discussed above, dependent claim 8 of the '650 Patent recites that upon actuation of the button actuator by the user, gas is permitted to flow in and out of the piston to increase or lower the height of the work platform, respectively. Thus, as claimed, the driver (e.g., gas driven piston) does impart motion to the claimed work platform contrary to Defendant's arguments that the driver

only "impedes motion." One of ordinary skill in the art would understand the claim term "permits gas to flow into the piston" [or out of it] means to flow into or out of the piston cylinder – it does not mean to flow into/out of the entire gas driven piston from/to the ambient atmosphere as alleged by Defendant. *See*, Ex. A, para. 8, Reply Declaration of Pinhas Ben-Tzvi. Contrary to the arguments made by Howard, the '650 and '668 Patents never state that air/gas is expelled to or inhaled from the ambient "atmosphere." The word "atmosphere" or anything synonymous to it was not used in the '650 and '668 Patents. Gas springs typically use sealed nitrogen gas to provide the air/gas pressure, and these gas driven pistons are closed/sealed systems where no gas leaks into or out of the piston cylinder. *Id*. at para. 9. Nitrogen gas, or some other type of gas/air, stored in the gas driven piston, moves in and out of the piston cylinder chamber (when the internal valve within the gas driven piston is opened and closed) to drive the piston up or down. *Id*. For example, see the figures illustrated in this section demonstrating how the stored gas/air in a sealed-type gas driven piston (e.g., gas spring or cylinder) flows (internally in a closed circuit) in and out of the piston cylinder via the opening and closing of the internal valve to impart or drive motion to the piston (and thus the component connected to the piston, *e.g.*, office chair, work platform, car trunk hood, etc.). *Id*. at paras. 10. These figures show a cross-sectional view of one example gas driven piston if it were cut down the middle of the piston cylinder along its axis. *Id*. at para. 12. Thus, the figures show a cut-away view of the inside of one example gas driven piston that could be used to adjust the height of the work platform of the present invention or adjust the height of an office chair. *Id*. The figure to the right shows the top portion of this example gas driven piston showing the valve in the closed ("locked") position. *Id*. If the user presses the piston valve down (via a connected

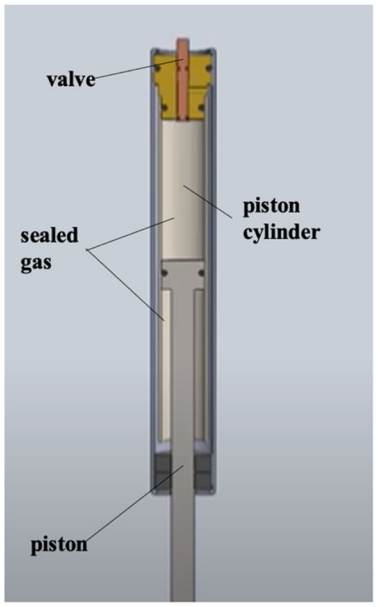

actuator, *e.g.,* button, lever, etc.), the valve will open and compressed gas will either flow out of the top of the piston cylinder to the bottom of the cylinder (to move the chair down) or the compressed gas will flow into the top of the piston cylinder from the bottom of the cylinder (to move the chair up) depending on whether the gas pressure is higher in the top of the piston cylinder or the bottom at the time of actuation. *Id*. at para. 13. See figure to the left (with direction of gas flow shown by the blue line and arrows) showing that when the valve is pressed down, the valve is opened which lets high pressure gas from the bottom of the piston cylinder to travel up a gap in the sidewall of the piston cylinder and enter the top of the piston cylinder (again via the valve opening) to drive the piston down and out of the cylinder bottom causing the chair seat to raise up. *Id*. at para. 14. Vice versa, if the user presses the actuator button which causes the valve on the piston to be pressed down and opened when the pressure is higher at the top of the piston cylinder (*e.g.*, when a user is sitting on the chair), then pressurized gas will flow out of the top of the piston cylinder to the bottom of the cylinder causing the piston to move back into the cylinder and cause the seat to go back down. *Id*. This description of the operation of one example gas spring for an office chair is similar to the description provided in the ’650 and ’668 Patents describing the operation of the gas driven piston for the invented medical cart. ’650 Patent, col. 9: 1-38; claim 8; Ex. A, para. 14, Reply Declaration of Ben-Tzvi.

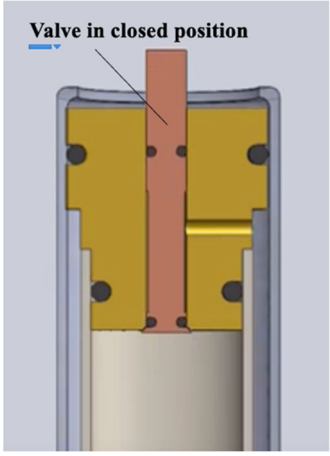

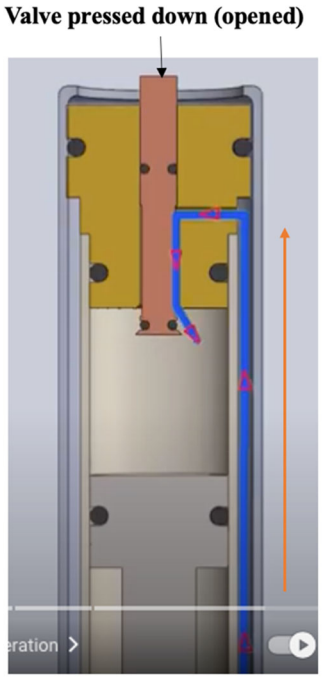

The gas driven piston can be designed or calibrated to move the component by using pressurized gas alone or it can be designed so that the user manually assists in moving the

component. *Id*. at para. 15. For example, for some consumer products, for safety reasons, the manufacturer typically prefers to design the gas driven piston with lower internal pressures. *Id*. These types of gas driven pistons with lower internal pressures are designed to impart motion slowly to the attached component (again for safety reasons), and designed to allow the user to assist the gas driven piston in moving the connected components up to their desired height. *Id*. However, in these cases, the pressurized gas is still doing much of the heavy lifting via stored gas pressure (e.g., stored energy). *Id*. Alternatively, one of ordinary skill in the art would also know how to design the gas driven piston to drive or impart motion to the attached component slowly without the assistance of a user at all (e.g., using higher pressures). *Id*. at para. 16-20. Thus, contrary to Defendant's arguments, the internal gas pressure (stored energy) of a gas driven piston does impart motion to the piston and connected work platform**.** *Id*.

III. Disputed Claim Constructions:

A. Disputed Claim Terms from the '650 and '668 Patents:

1. "height adjustment mechanism:"

As stated in Plaintiff's opening brief, both parties agree that the plain and ordinary meaning of the term "height adjustment mechanism" should apply, however Plaintiff believes that it should be construed to aid a future jury because the term is not a commonplace term for a lay person.

Defendant's argument that Plaintiff's definition would impermissibly broaden the claim beyond the scope of the claims is wrong and goes against the heavy presumption of applying the plain and ordinary meaning of the claim term. For example, the plain and ordinary meaning of "height adjustment mechanism" is a set of components for adjusting the height of an "*object*" not a "*work platform*." For example, the ordinary meaning of "height adjustment mechanism" can include adjusting the height of more than just a work platform (*e.g*., the ordinary meaning can also apply to adjusting the height of chairs and car trunk hoods for example). The limitations of a "work platform"

are found elsewhere in the claims of the ’650 and ’668 Patents so there is no danger of expanding the scope of the patent claims to cover the height adjustment of other objects other than work platforms as alleged by Defendant.

Defendant’s argument that substituting Plaintiff’s proposed definition into the claims would result in redundancy is also not persuasive. Other District Courts and the Court of Appeals for the Federal Circuit (CAFC) have consistently declined to construe terms in a manner contrary to its clear meaning simply to avoid perceived redundancy. *See 01 Communique Lab., Inc. v. Logmein, Inc.*, 687 F.3d 1292, 1296 (Fed. Cir. 2012) (finding limitations recited in the claim can be incorporated into the definition of “location facility”); *ViiV Healthcare UK Ltd. v. Lupin Ltd.*, 6 F. Supp. 3d 461, 475 (D. Del. 2013) (“It would be better to allow for some redundancy than to adopt a construction that is inconsistent with the invention.”).

Plaintiff has fully briefed its position in its opening brief and will not rehash them here. Plaintiff’s proposed definition is merely consistent with the plain and ordinary meaning of the term “height adjustment mechanism.” In Plaintiff’s opening brief, Plaintiff pointed to a list of intrinsic and extrinsic evidence supporting Plaintiff’s proposed definition.

2. “driver:”

Plaintiff Capsa’s proposed definition is consistent with the plain and ordinary meaning of the term “driver,” while Defendant Howard redefines the term “driver” and narrowly limits it to one specific type of driver - a “gas driven piston.” Defendant points to one statement in the ’650 and ’668 Patents that describes one (or “first”) embodiment of the invention as *including* a gas piston driver as their main support for their argument that the patentee engaged in lexicography and redefined the term “driver” to mean only one specific type of driver (a gas driven piston). Dkt. 46, pg. 27. This is not the type of clear evidence of redefinition needed to overcome the heavy presumption to apply the plain and ordinary meaning of driver. In other words, the ’650 and ’668

Patents merely describe that the "first embodiment of a medical cart" has a driver that "includes" a gas driven piston – but never states, clearly or otherwise, that *the invention* of the '650 and '668 Patent or *all* embodiments of the invention *must* include a gas driven piston. *See, e.g., Luminara Worldwide, LLC v. Liown Elecs. Co*., 814 F.3d 1343, 1353 (Fed. Cir. 2016) (finding that standards for finding lexicography and disavowal are "exacting" and that clear disavowal is found when the patentee for example states that "*all* embodiments of the present invention… [includes a particular feature]") (emphasis added). *See, also, Finjan, Inc. v. Qualys Inc.,* No. 4:18-cv-07229-YGR, 2020 U.S. Dist. LEXIS 103337, at *18 (N.D. Cal. June 11, 2020); *David Netzer Consulting Eng. LLC v. Shell Oil Co.*, 824 F.3d 989, 994 (Fed. Cir. 2016) (requiring clear and unmistakable statements, like "the present invention includes," "the present invention is," or "all embodiments of the present invention are"). The patentee never stated in the '650 and '668 Patents that the "gas driven piston" was the only type of driver that could be used in the invention nor did the patentee disparage or disclaim other types of drivers (e.g., hydraulic or electro-mechanical drivers or linear actuators). *See, e.g., Openwave Sys. v. Apple Inc*., 808 F.3d 509, 514 (Fed. Cir. 2015) (only limiting the claim term to the example feature when the patentee repeatedly disparaged other alternative features). On the contrary, as discussed in more detail below, the patentee wrote the '650 and '668 Patents in ways to ensure that the term "driver" should *not* be limited to one specific type of driver. Defendant is engaging in the improper practice of reading in limitations and features of one example embodiment described into the claims without any evidence of redefinition or disclaimer by the patentee, much less clear and unmistakable evidence. The Defendant has failed to cite to any case law for the proposition that the mere absence of permissive language to describe an invention necessarily means that the patentee engaged in lexicography. The cases Defendant relies on are distinguishable. For example, the *ITT Indus.* case relied upon by Defendant is distinguishable because in that case it was proper to limit the disclosed embodiment where the

patentee made it clear that the disclosed embodiment was the "the…invention" and not just a preferred or example embodiment). *Honeywell Int'l, Inc. v. ITT Indus*., 452 F.3d 1312, 1318-19 (Fed. Cir. 2006). The *Covad Communs. Grp.* case the Defendant relies upon is also distinguishable. In that case, unlike the present case, the CAFC found many other statements in the patent and file history (not just the absence of permissive language) demonstrating the patentee's intent to limit the invention to the disclosed embodiments and to adopt a definition contrary to the plain and ordinary meaning. *Bell Atl. Network Servs. v. Covad Communs. Grp*., 262 F.3d 1258, 1270-75 (Fed. Cir. 2001). Thus, use of permissive language is just one factor to consider when determining whether to limit the claim term to one specific feature described in the patent. *In re Maxim Integrated Prods., Inc*., No. 12-244, 2013 U.S. Dist. LEXIS 177758, at *40-41 (W.D. Pa. Dec. 17, 2013). As discussed below, in the present case there are many other factors that demonstrate that the patentee did not intend to limit the scope of the invention (claims) to one specific type of driver (gas driven piston).

The cases cited by Defendant do not stand for the proposition that the absence of "permissive language" (e.g., "may include" or "can include") when describing the invention is dispositive, or necessarily leads, to the conclusion that the patentee acted as his or her lexicographer and redefined the term. Especially here when the patentee made every effort to indicate that the gas driven piston was not the invention but one example type of driver that could be used in the invention. For example:

1. The patentee clearly did not equate a "driver" to a "gas driven piston" because they were labeled with separate reference numerals. *Id*. (referring to the driver as **430** and gas driven piston as **432**);

2. The patentee makes it clear in the ’650 and ’668 Patents, that the gas driven piston **433** is a feature of the “first embodiment” of the invention and not “*all* embodiments of the invention” or “*the* invention.” *See* ’650 Patent, col. 3:13-59;
3. The Patentee explicitly stated that the invention of the ’650 and ’668 Patent is not “restricted” to the disclosed embodiments, and that other medical carts and height adjustment mechanisms (which include drivers) are “fully within the scope of the claimed invention.” ’650 Patent, col. 14:5-18 (also stating “the apparatuses and methods described herein are illustrative only and are not limiting upon the scope of the invention, which is indicated by the following claims”).
4. The principles of claim differentiation provide strong support that the patentee clearly intended that the broader invention claimed in the independent claims as a “driver” was not limited to a “gas driven piston” as recited in the dependent claims.

All this evidence provides strong evidence that the patentee took substantial effort to make sure the claimed invention was not limited to one specific type of driver (gas driven piston). Defendant has not provided any clear evidence to overcome the heavy presumption to apply the plain and ordinary meaning or to overcome the presumption that different claims do not have the same scope.

With no evidence in the intrinsic record demonstrating that the patentee intended to redefine the term “driver” as one specific type of driver (gas driven piston), the Defendant resorts to making convoluted and technically wrong arguments in support of their overly-limiting definition. The Defendant’s argument that Plaintiff’s proposed definition contradicts the claims and that a gas driven piston does not impart motion to another component is, to be blunt, flat-out technically wrong as explained in the background discussion of gas piston technology.[1] Plaintiff

[1] Defendant’s own expert even admits that a gas spring is an example of a gas driven piston that can impart force/motion to a component attached to a piston rod. Dkt.46-15, Ex. 15 Declaration of David

merely uses the term "driver" in the claims consistent with its plain and ordinary (and dictionary) meaning of a driver – it imparts motion to another component (i.e., it is the driving mechanism of the height adjustment mechanism that assists in moving the work platform to adjust the height of the work platform and also to releasably lock it in place). *See, e.g.,* '650 Patent, independent claim 1 (reciting that the driver is part of the height adjustment mechanism); dependent claim 8 (reciting "that the driver includes a piston, that in response to the user's actuation of the actuator, permits gas to flow into the piston during *increasing the height of the platform*."). *Id* at claim 8 (emphasis added). Nowhere in claim 8 does it state or require that the user is the one that imparts motion to the work platform – it is the driver (e.g., gas driven piston) that is the component recited in the patent claims that imparts motion to the work platform. Even accepting Defendant's argument that the disclosed embodiment of the invention requires a user alone to impart motion to the work platform (which is not true), this is but one example embodiment of the invention and should not be read into the claims – which again are recited more broadly as not requiring manual user force at all to adjust the height of the work platform. In other words, just because the example embodiments may be described in the patent as being calibrated with low internal pressures so that the user assists in adjusting the height of the work platform with manual force does not mean the patentee intended to redefine the term "driver." A POSITA would have known that the driver (e.g., gas driven piston) described in the '650 and '668 Patents could also be calibrated with higher internal pressures so that manual user force would not be needed at all. *See*, Ex. A, paras. 15 and 16, Reply Declaration of Ben-Tzvi.

Contrary to Defendant's arguments, the gas driven piston is a well-known component in the art and it is known as a device that clearly drives/imparts motion to another component – the

---

Smith, para. 23 (stating "the larger force causes the rod [in a gas spring] to extend…").

very name of the component "gas driven piston" even conveys that the internal "piston" is "driven" by "gas." Id. at para. 7. Plaintiff and its technical expert, Dr. Ben-Tzvi have cited to multiple other patents and Websites that describe various types of gas driven pistons that use pressurized gas to drive or impart motion for various components (e.g., office chairs, car trunk hood, medical carts. etc.). For example, *see* Dkt. 45-2, Declaration of Ben-Tzvi in support of Plaintiff's Opening Claim Construction Brief, paras. 19, 26 (discussing Dkt. 45-2, Exhibits 3-10, attached to Dr. Ben-Tzvi's opening declaration, showing various Websites that discuss gas/pneumatic drivers that use pressured gas to impart motion via an extendable piston).

As summarized in Plaintiff's opening brief, Plaintiff cites to at least three different District Court cases, including a recent decision in 2022 from the District Court of Minnesota, finding that the term "driver" has a plain and ordinary meaning and citing to a dictionary definition that is substantially the same as Plaintiff's proposed definition ("a mechanical piece for imparting motion to another piece"). Dkt. 45, pg. 17.

Based on the foregoing, Plaintiff submits that the '650 and '668 Patent claims use the term "driver" consistent with its plain and ordinary meaning. Defendant has pointed to no evidence, much less clear evidence, that the patentee intended to redefine the term "driver" as being limited to one specific type of driver as Defendant urges. The Defendant has failed to overcome the heavy presumption of applying the plain and ordinary meanings of claims and has failed to overcome the presumption of claim differentiation (which is strong in this case).

3. "actuator:"

Defendant's entire argument that the term "actuator" is indefinite is based on Defendant's incorrect allegation that the term "actuator" should be treated as a means-plus-function term and, that the term "actuator" is indefinite because there is no corresponding structure disclosed in the '650 and '668 Patents for performing the function of controlling the driver. 35 U.S.C. 112, para.

6. Thus, if this Court finds that the term "actuator" as used in the claims of the '650 and '668 Patent is not drafted in "means-plus-function" format, Defendant Howard's argument ends there. In other words, the Court does not have to make a determination of "indefiniteness" under 35 U.S.C. 112, para. 6, because this section of the statute does not apply.

The term "actuator" is not a means-plus-function term (under 35 U.S.C. 112, para. 6) because the patent claim recites the term "actuator" without the term "means" or other nonce word.[2] If a claim limitation does not use "means for" or "step for," it is presumed that 35 U.S.C. 112, ¶ 6 does not apply. *Williamson v. Citrix Online, LLC*, 2015 U.S. App. LEXIS 10082, 2015 WL 3687459 (Fed. Cir. June 16, 2015). Defendant has not provided any evidence to rebut this presumption.

Additionally, the claimed "actuator" is not a "means-plus-function" term because actuators are a well-known general class of structures that are used to actuate or activate something. Ex. A, para. 21, Reply Declaration of Ben-Tzvi. One of ordinary skill in the art, reviewing the '650 and '668 Patents would know that the term "actuator" is used consistently with its plain and ordinary meaning to refer to a known general class of structures used to actuate or control another device (e.g., push buttons, levers, knobs, pedals, etc.). *Id*. at para. 22. *See* Dkt. 45-2, para. 22; Dkt. 45, pgs. 22-24 (citing to dictionary definitions, other U.S. Patents, and other

[2] For example, the patentee did not draft the *claims* of the '650 and '668 Patents at-issue to read a "*means* for actuating," or a "*means* for controlling…," or "*mechanism* for actuating…"– the patentee recited an "actuator" in the '650 and '668 patent claims without using the term "means" or other nonce words (such as "mechanism"). Thus, there is a presumption that 35 U.S.C. § 112, para. 6, does not apply. Defendant's argument that Plaintiff's proposed *definition* of "actuator" uses a nonce word "mechanism" is misplaced. Defendant is confusing the use of nonce words in the *claims* vs. the claim *definition*. It is only the use of the word "means" or other nonce words in the *claims* that is relevant to the issue of whether a term is a means-plus-function term or not. Many Courts use the term "mechanism" in the definition of terms to connote a general class of structures. For example, see cases cited by Plaintiff in its opening brief where several District Courts defined the term "actuator" using the term "mechanism." *See*, Dkt. 45, pgs. 22-23.

District Court cases demonstrating that the term "actuator" is well-known as connoting a general class of structures). *See*, *Advanced Aero. Techs., Inc. v. United States*, 122 Fed. Cl. 445, 477-79 (2015) (finding "sensor" is not a means-plus-function limitation stating "sensor" "has a reasonably well-understood meaning that connotes a structure); *Personalized Media Communs., L.L.C. v. ITC*, (Fed. Cir. 1998) (finding the claim term "detector" was not a means-plus-function limitation because it connotes a general class of structures to a POSITA); *Greenberg v. Ethicon Endo-Surgery, Inc*., 91 F.3d 1580 (Fed. Cir. 1996) (finding that the claim term "detent mechanism" was not a means-plus-function limitation); *Maxell Ltd. v. Huawei Device USA Inc*., 297 F. Supp. 3d 668, 746-48 (E.D. Tex. 2018) (finding the recited claim term "controller" was considered structural and outside §112, ¶6). Similar to the well-known words of "sensor," "detector," and "controllers," the term "actuator" is not a means-plus-function term because an "actuator" is a well-known term that connotes a general class of structures (e.g., push-buttons, levers, knobs, dials, or other components for controlling other devices).

Although Defendant's indefiniteness arguments fail because Defendant has failed to overcome the presumption that the "actuator" term is not a means-plus-function term, the '650 and '668 Patents clearly provide sufficient disclosure of structure for the claimed "actuator" performing the function of "controlling the driver." The intrinsic evidence demonstrates that one of ordinary skill in the art would understand that the disclosed actuator (e.g., push-button of the actuator) is used to control the gas driven piston by controlling the gas/air flow within the gas driven piston (or cylinder).

In the present case, the push-button actuator activates or controls the air/gas flow in and out of the piston [cylinder]. *See* '650 Patent, claims 1, 8; col. 9:1-38 of the '650 Patent. The user pushes down the button **444** "of the actuator" **440** and it signals the piston through the connector **442** to activate or control the gas/air flow in the gas driven piston **432** to drive it up or down (e.g., adjust height of the work platform). '650 Patent, Fig. 9A. In fact, dependent claim 8 of the '650 Patent explicitly recites how pushing the actuator button controls the gas flow (and height adjustment) in the gas driven piston. *Id.* As discussed, one of ordinary skill in the art would know that the "actuator" can be implemented in various ways such as using a push-button, lever, knob, foot pedal, etc. using electrical, mechanical, hydraulic, or gas control signals.[3] Ex. A, para. 23, Reply Declaration of Ben-Tzvi.

Fig. 9A

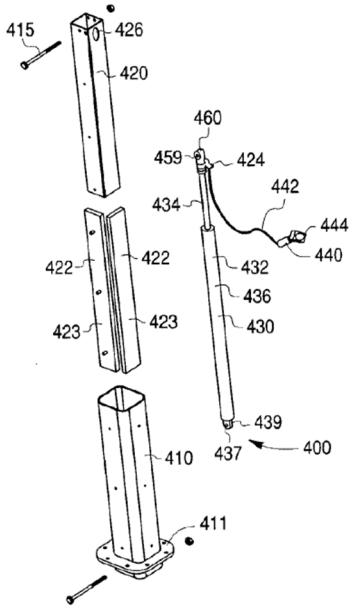

The '650 and '668 Patents recite inventions to an ergonomic mobile cart with a height adjustment mechanism and driver actuated with a push-button actuator, but the patentee made it clear that the invention was not limited to one specific type of actuator. In other words, the

[3] It is not required for a patent to describe every detail of well-known components. This is not the typical vague "black box" circumstance where a patentee merely provides a description of a generic black box that has no well-known structural connotation. Here an "actuator" has a well-known structural connotation and patentee has labeled the described components as an "actuator" (with further details in the '650 Patent about the push-button and connectors and control signals sent to control gas flow within the piston). *See, e.g., Quanergy Sys. V. Velodyne Lidar, Inc.*, No. 16-cv-052510EJD, 2017 U.S. Dist. LEXIS 164916, at *41 (N.D. Cal. Oct. 4, 2017) (finding the term "coupling" was not a "black-box" description and was not a means-plus-function term because the term "coupling" connotes a structural connection for energy transfer"). "[T]he specification need only disclose adequate defining structure to render the bounds of the claim understandable to an ordinary artisan." *Telcordia Techs., Inc. v. Cisco Sys.*, 612 F.3d 1365, 1377 (Fed. Cir. 2010) (finding that a description of a black box labeled a controller but without any internal circuitry was not indefinite because a POSITA would understand the scope of the term because it was a known structural term).

invention of the ’650 and ’668 Patents does not relate to a new type of driver or actuator. Commercially known, off-the-shelf, drivers and actuators can be used with the invention of the ’650 and ’668 Patents. *Id.* para. 24. As discussed, actuators have been around for decades and these are off-the-components that are well-known to a POSITA. *Id*. For example, a user actuates or activates the gas piston driver by using actuator to activate or open the piston valve which causes the internal gas to flow in and out of the cylinder driving the piston up or down. *Id*. No further explanation is needed for a POSITA to understand what an “driver” and “actuator” as used in the present invention covers. *Id*.

In its opening brief, Plaintiff also cited to multiple District Court cases, finding the term “actuator” is a well-known structural term that connotes a general class of structures. *See*, Dkt. 45, pg. 22. Plaintiff also cited to other dictionary definitions and U.S. patents cited in opening brief, and expert declaration of Dr. Ben-Tzvi confirming that the term “actuator” is a well-known term that connotes a general class of structures. *Id*. at 23-24.

The intrinsic and extrinsic evidence demonstrates that the term “actuator” is not indefinite but a well-known term in the art as referring to a general class of structures for activating/actuating or controlling equipment, for example by pressing or activating a push button, lever, switch, foot pedal, knob, dial or other type of actuator. In other words, an “actuator” is just what it sounds like and what most people understand it to be, a mechanism that actuates, activates or controls something. Plaintiff Capsa’s proposed definition is consistent with this plain and ordinary meaning of “actuator.” Defendant has failed to overcome the presumption that the term “actuator” is not a means-plus-function limitation under 35 U.S.C. § 112, para. 6, because the term “means” is not recited and because the term “actuator” has a well-known structural meaning or connotation to a POSITA. Again, the patent examiner who examined the ’650 and ’668 Patents did not believe the term “actuator” was indefinite when he or she allowed the Patent.

4. "releasably lock:"

Plaintiff Capsa respectfully submits that its proposed definition is correct as it is consistent with the plain and ordinary meaning of "releasably lock." Defendant Howard's definition is incorrect because 1) it is against the plain and ordinary meaning of "releasably lock," 2) their definition gives no meaning to the term "releasably" (essentially reading it out of the claim)[4], 3) it limits the term to one specific type of lock using pins, latches or other mechanical impediment and 4) it is vague (it is unclear what the term "mechanical impediment to movement" entails). Additionally, Defendant's definition would exclude the preferred embodiment of the invention as gas driven pistons do not use a pin, latches or a mechanical impediment to releasably lock the object in place (they use the balancing of internal gas pressure within the piston cylinder) as discussed above in the discussion of the technical background.[5]

Plaintiff has fully briefed its position in its opening brief and will not rehash them here. Plaintiff's proposed definition is merely consistent with the plain and ordinary meaning of the term "releasably lock." In Plaintiff's opening brief, Plaintiff pointed to a list of intrinsic and extrinsic

---

[4] Defendant makes the outrageous claim that it is Plaintiff that reads the term "releasably" out of the claim when, in fact, it is Defendant's definition that gives no weight to the term "releasably." For example, Plaintiff's proposed definition explicitly *includes* the term "releasably" giving it full weight ("releasably" is a well-known term so Plaintiff did not feel it needed further construction). It is Defendant's proposed definition that gives no weight to the term "releasably lock".

[5] On pages 36 and 37 of its opening brief, Defendant points to one example embodiment of a releasably locking driver using cams from the provisional application 60/484,658 as support for their definition. Dkt. 46 (referencing Dkt. 46-7 at pg. 4). This is just one example type of locking mechanism described in the intrinsic evidence. As discussed, the nonprovisional patent applications that issued as the '650 and '668 Patents also describe an example embodiment of the invention that uses a gas driven piston driver (that uses internal gas pressure to releasably lock the driver). Contrary to Defendant's arguments, nowhere in the provisional patent application or the nonprovisional '650 Patent did the patentee ever redefine the term "releasably lock" or disclaim coverage over drivers that do not use pins, latches or other mechanical impediments to motion, much less clearly and unmistakably. In fact, the excerpt of the provisional application pasted in Defendant's opening brief even states that the spring loaded cam driver is an "example" of the invention. *See also*, Dkt. 46-7, pg. 8, para. 7 (describing other ways to practice the invention including the ability to "use spring loaded pistons to substitute for the cam").

evidence supporting Plaintiff's proposed plain and ordinary definition. Plaintiff also cited to various District Court cases where other Federal District Courts defined the claim term "releasably lock" or "lock" consistent with Plaintiff's proposed definition and refusing to limit the terms to one specific type of lock as Defendant attempts to do. The intrinsic and extrinsic evidence discussed in Plaintiff's opening brief provide concrete evidence that the term "releasably lock/position" has a well-understood plain and ordinary meaning in and that the term is not limited to any specific type of locking mechanism (*e.g.*, pins and latches).

5. "work platform:"

As stated in Plaintiff's opening brief, Plaintiff believes that the term "work platform" should be construed to aid a future jury because the term is not a commonplace term for a lay person. Although the terms "work" and "platform" have plain and ordinary meanings, it is arguable that the combined word "work platform" does not have a well-known plain and ordinary meaning, or it has multiple possible meanings. Thus, Plaintiff respectfully submits that the term should be construed to clarify the meaning for a jury (especially in this case where the jury might be confused as there are multiple terms at-issue with the word "platform" in them, *e.g.*, "movable platform"). Although Defendant argues that the terms "work" and "platform" have plain and ordinary meanings when individually construed, Defendant provides no evidence of what the plain and ordinary meaning of the combined term "work platform" is. Defendant fails to cite to any sources of evidence such as a dictionary definition of "work platform" for its allegedly "plain and ordinary meaning." In fact, after reading Defendant's arguments regarding the definition of "work platform," there is still no clarity on what the plain and ordinary meaning of "work platform" is.[6]

[6] Defendant again argues that it is overly broad because it would read on other devices like scaffolding platforms. Again, Defendant's argument is misplaced as Defendant engages in an improper infringement analysis of one term "work platform" in isolation as opposed to determining infringement by comparing the entire claim to the accused device.

For example is it Defendant's position that "work platform" is just a platform for doing work?" If so, their proposed definition would also read on components like scaffolding, hospital gurneys, scissor lifts, etc. Defendant's position leaves many unanswered questions. Plaintiff has fully briefed its position in its opening brief and will not rehash them here. In Plaintiff's opening brief, Plaintiff pointed to a list of intrinsic and extrinsic evidence supporting Plaintiff's proposed definition.

6. "movable platform:"

Again, Plaintiff has fully briefed its position in its opening brief and will not rehash them here. In Plaintiff's opening brief, Plaintiff pointed to a list of intrinsic and extrinsic evidence supporting Plaintiff's proposed definition. For example, one example embodiment of the claimed "movable platform" described in the '650 Patent is a laptop platform that extends in the forward and back direction. This laptop platform is a structure or component that has a surface but is not equal to a surface as urged by Defendant. Defendant's proposed definition redefines the term "movable platform" to mean a "movable surface at the top of the cart" without any evidence, much less clear evidence, that the patentee redefined the term or disclaimed coverage over platforms that are not at the top of the cart. For example, Defendant argues that disclaimed/disavowed coverage over movable platforms that are not at the top of the cart during prosecution of the '650 Patent citing to Dkt. 46-10, Ex. 5, pgs. 15-16 (Examiner's Interview Summary) attached to Defendant's opening brief. First, this is an Examiner's summary of what was discussed during an interview with the patentee – this excerpt relates to the Examiner's general comments and is not a statement of disclaimer by the *patentee*. *Salazar v. Procter & Gamble Co.,* 414 F.3d 1342, 1345 (Fed. Cir. 2005); *3M Innovative Props. Co. v. Avery Dennison Corp.*, 350 F.3d 13656, 1373-74 (Fed. Cir. 2003) ("***Prosecution history…cannot be used to limit the scope of a claim unless the applicant took a position*** before the 'PTO"). What the Defendant conveniently fails to point out, is that in

the same Examiner's Interview Summary, the Examiner states that the Applicant "tentatively proposed" amending claims 1, 9, and 16 as follows:

> Continuation of Substance of Interview including description of the general nature of what was agreed to if an agreement was reached, or any other comments: The inventive cart was briefly discussed with a view to the specific elements constituting the various movable work surfaces at the top of the cart (elements 370 and 350). Further, applicant has tentatively proposed amending each of the independent claims to include:
> a. [claim 1]: "wherein the work surface is disposed above a top of the at least one compartment…wherein the work surface is movable relative to a remainder of the work platform from an extended position to a non-extended position"
> b. [claim 9]: "wherein the movable platform and the work surface are disposed above a top of the at least one compartment."
> c. [claim 16]: "wherein the secondary work surface and the movable platform are positioned above a top of the at least one compartment."

Dkt. 46-10, Ex. 5, pgs. 15-16. There was ***no statement made (or "position" taken) with respect to dependent claim 6 of the '650 Patent which is the only claim at-issue in the present case that recites the term "movable platform."*** Subsequent to this interview, Applicant followed through with the tentatively proposed amendments by amending claim 1 to read that the "wherein the work surface is disposed above a top of the at least one compartment." Ex. B, excerpt from '650 File History, pgs. 2-5, Applicant's Remarks, dated March 28, 2012 (and amended claims). The Applicant also amended claims 9 and 16 to require that the "movable platform" be disposed/positioned "above a top of the at least one compartment." *Id*. at pg. 52. However, what is crucial and what Defendant fails to mention is that the Applicant did *not* amend dependent claim 6 which recites ("6. The cart of claim 1, wherein the work platform further comprises a movable platform configured to move in at least one of the forward direction and the rearward direction"). *Id*. Nowhere in dependent claim 6 does it require that "movable platform" to be at the top of the cart or over the top of the at least one compartment. *Id*. Thus, the Applicant/patentee made it clear that the "movable platform" recited in dependent claim 6 did not need to be disposed above a top of the at least one compartment." Thus, the only claim at at-issue in the present case that recites the "movable platform" is silent as to the location of the movable platform. Again, different claims are presumed to have different scope. By amending claims 9 and 16 to require the "movable

platform" to be disposed "over the top of the at least one compartment" but leaving those limitations out of dependent claim 6, Applicant made it clear that the "movable platform" recited in claim 6 is not so limited. Thus, contrary to Defendant's arguments, there is no evidence, much less unmistakable evidence, that the Applicant/Patentee of the '650 Patent limited the "movable platform" recited in dependent claim 6 to be disposed at the top of the cart or above the at least one compartment as Defendant urges. In fact, the evidence demonstrates that the Applicant took steps to ensure that dependent claim 6 would *not* be so limited.

7. "work surface:"

In Plaintiff's opening brief, Plaintiff points to a list of intrinsic and extrinsic evidence supporting Plaintiff's proposed plain and ordinary definition. Defendant's proposed definition redefines the term "work surface" to a specific curved shape and size without any evidence, much less clear evidence, that the patentee redefined the term or disclaimed coverage over work surfaces of other shapes and sizes. As explained in Plaintiff's opening brief, the standard for finding redefinition or disclaimer of claim scope is "exacting" and the Defendant has the burden of showing by clear and unmistakable evidence that the patent Applicant intended to redefine the claim term. None of the citations to the prosecution history of the '650 Patent by Defendant comes close to meeting this exacting standard. In fact, as extensively briefed throughout Plaintiff's briefing, Applicant went out of the way to ensure the term "work surface" would not be so limited as argued by Defendant. Defendant points to descriptions of one example embodiment of a work surface **350** described in the '650 and '668 Patents and in conclusory fashion, concludes that this must somehow indicate that all "work surfaces" must be located at the "top of the cart," have a "curved" surface and be large enough to dispense medication or hold work papers." For example:

a. Defendant argues the Applicant made statements limiting the "work surface" as being located at the "top of the cart." First, the Applicant never recited the words "top

of the cart" in any of the claims at-issue. As summarized above in the discussion of the "moveable platform" term, after the interview with the Examiner, the Applicant did "tentatively propose" to amend *certain* claims to require the work surface to be "disposed above a top of the at least one compartment," (which the Applicant did), however the Applicant never agreed to redefine the term "work surface" as being located "at the top of the cart" as Defendant alleges. In fact, the '650 and '668 Patents never use the term "at the top of cart" anywhere. Thus, Defendant's proposed definition is not only not supported but it is vague as it is unclear what exactly "at the top of the cart" refers to.

b. Defendant argues that Applicant of the '650 and '668 Patents acted as a lexicographer by redefining the term "work surface" to be curved by citing to various portions of the '650 and '668 Patents. Dkt. 46, pg. 13 (referencing Figures 4A, 4B of the '650 Patent showing an example curved work surface **350**).[7] However, these portions of the patent descriptions relied upon by Defendant are merely descriptions of one example embodiment ("first embodiment") of the invention and not "*the* invention." *See* '650 Patent, col. 3:13-59 (description of Figures 1-15 as the "first embodiment of a medical cart" and Figure 16 as a "second embodiment of the invention"). The Patentee then explicitly states that the invention of the '650 and '668 Patent is not "restricted" to the disclosed embodiments, and that other medical carts are "fully within the scope of the claimed invention." '650 Patent, col. 14:5-18.

In other words, the '650 and '668 Patents merely describe that the "first [example] embodiment of a medical cart" has a work surface that that is arcuate in shape– but never states, clearly or otherwise, that *the invention* of the '650 and '668 Patent or *all* embodiments of the

[7] Similar to Defendant's arguments for the term "driver," Defendant argues that the lack of permissive language when describing one embodiment of the invention is enough evidence to support a redefinition of the term "work surface" as being "curved."

invention *must* include a curved work surface. The patentee never stated in the ’650 and ’668 Patents, clearly or otherwise, that the a “curved” work surface was the only type of work surface that could be used in the invention. On the contrary, as discussed, the patentee wrote the ’650 and ‘668 Patents in ways to ensure that the term “work surface” should *not* be limited to a curved. Defendant’s argument also fails because Defendant the ’650 and ’668 Patents also describe other work surfaces disclosed in the ’650 and ’668 Patents that are not curved (e.g., the non-curved secondary work surface **379** recited in claim 16 and the surface of the laptop platform **370,** which can also move to an extended position, are not curved). *See*, *e.g.,* ’650 Patent, Fig. 2b. *Bell Atl. Network Serv. v. Covad Communs. Grp.,* 262 F.3d 1258, 1270 (Fed. Cir. 2001) (reasoning that the “varied use of a disputed term in the written description demonstrates the breadth of the term rather than providing a limited definition”).

The Defendant also cites to sections of provisional application in support of its argument that the claimed “work surface” must be “curved.” Dkt. 46, pgs. 13-15. Again, these references from the *provisional* application describe one example arcuate or curved work surface but there are no statements, much less clear and unmistakable statements, that all “work surfaces” described in the later-filed and more complete *nonprovisional* ’650 and ’668 Patents must be curved.

Initially, the statement that “the work surface must curve around the user for better ergonomics” were only made in the provisional patent application, however, this statement, and other similar statements, were left out of the subsequently filed nonprovisional application that issued into the ’650 and ’668 Patent which demonstrates that the Applicant did not intend the claims of the ’650 and ’668 patents be so limited. It is clear that patent Applicant first filed a “less formal” provisional patent application by submitting a corporate “Invention Disclosure Form” but included more details of other “non-curved” work surfaces when converting the provisional patent application to a nonprovisional patent application (the nonprovisional patent application

subsequently issued as the '650 and '668 Patents).[8] As discussed, when converting the provisional application into the more complete nonprovisional application, the Applicant broadly claimed the "work surface" in claim 1, then claimed that it was "arcuate"/curved in dependent claim 7 evidencing that the Applicant clearly intended to recite the "curved" work surface in dependent claim 7 but not in independent claim 1. Second, these statements in the provisional application merely describe one of the example work surfaces **350**, but does not state, clearly or otherwise, that all work surfaces must be curved (e.g., work surface **379** and the surface of the laptop platform **370** are not curved).

The commonplace act of incorporating by reference the provisional application(s) and all other earlier filed related applications by the nonprovisional patent cannot overcome the fact that when the inventors finalized the specification and claims of the '650 Patent, they did not limit the "work surface" of the independent claims to any given shape (e.g., claim 1 of the '650 Patent). *Cf. Modine Mfg. Co. v. U.S. Int'l Trade Comm'n*, 75 F.3d 1545, 1553 (Fed. Cir. 1996) (refusing to read language of incorporated reference as "overriding" the incorporating reference, because "incorporation by reference does not convert the invention of the incorporated patent into the invention of the host patent"); *Finjan LLC v. ESET, LLC*, 51 F. 4th 1377, 1382 (Fed. Cir. 2022); *Smartphone Techs., LLC v, Research in Motion Corp*., Civil Action No. 6:10-CV-74-LED-JDL, 2012 U.S. Dist. LEXIS 19242, at *11 (E.D. Tex. Feb. 13, 2012) (refusing to narrowly limit the claim term because the later-filed incorporating patent described the term more broadly than the incorporated patent). "[T]he most relevant specification is the one in which the disputed *claim* is

[8]Provisional applications are informal that are filed to preserve the filing date. 35 U.S.C. 111(a); Ex. A, at para. 25. Reply Decl. of Ben-Tzvi. The provisional patent applications are then converted into a nonprovisional patent application within a year of filing the provisional patent application, that is then examined by the Patent Office. *Id*. Thus, the later-filed nonprovisional patent application is the more complete, and most current, patent filing that demonstrates the true intent of the patent Applicant and the true scope of the claims. *Id*.

contained." *ActiveVideo Networks, Inc. v. Verizon Communs., Inc*. 801 F. Supp. 2d 465, 486 (E.D. Va. 2011). Similarly, following the reasoning of the cases cited above, Defendant Howard provides no argument why one embodiment of curved work surface from the incorporated provisional application should override the patentee's clear intent to claim the term "work surface" broadly in claim 1 of the '650 (nonprovisional) Patent to read on non-curved work surfaces.

When construing the term "work surface" in light of the more complete description and submitted claims of the later-filed nonprovisional application, it becomes clear that Defendant's attempt to redefine the term "work surface" to a specific "curved" shape is not supported by clear statements of redefinition or disclaimer.

c. Defendant argues the patent Applicant disclaimed coverage over "work surfaces" that are not large enough to dispense medications or hold large papers. There are no statements in the intrinsic evidence, much less clear and unmistakable, demonstrating that the patent Applicant intended the claimed "work surface" of claim 1 of the '650 Patent to be limited to a specific size as Defendant urges. As previously discussed, the broad independent claims of the '650 and '668 Patents recite a "work surface" but are silent as to the size of the work surface thus evidencing the intent of the inventor to prevent the claimed invention from being so restricted. The statements relied upon by Defendant in the '650 and '668 Patents relate to descriptions of one example embodiment of the invention and do not rise to the level of clear redefinition or disclaimer of claim scope. For example, the '650 Patent states that prior art carts suffer from a lack of work space, but never redefines the term "work surface" as being a specific size. Additionally, there is no evidence that the patent Applicant clearly disclaimed work surfaces of other sizes. Mere criticism of a particular embodiment encompassed in the plain meaning of a claim term is not sufficient to rise to the level of clear disavowal. *Thorner v. Sony Comput. Entm't Am. LLC*, 669 F.3d 1362, 1366 (Fed. Cir. 2012). The patent Applicant of the '650 and '668 Patents certainly

recognized that there was a problem with existing cart technology having limited work space but this does not amount to a clear and unmistakable redefinition of the term "work surface" to mean a specific work surface large enough to dispense medications or hold work papers. In fact, the later-filed nonprovisional '650 and '668 Patents that incorporate the less formal provisional applications by reference describe other solutions to the lack of workspace that do not amount to making the claimed "work surface" bigger in size. For example, one other possible solution, as described in the '650 and '668 Patents to solve the problem of limited work space is to include more work spaces (e.g., multiple work surfaces shown generally at **350, 370**, **379**). '650 Patent, Figs. 2A, 2B, 4A.

The Defendant also cites to sections of provisional application in support of its argument that the claimed "work surface" must be restricted to a specific size. Dkt. 46, pgs. 15-17. Again, these references from the *provisional* application describe one example work surface but there are no statements, much less clear and unmistakable statements, that all "work surfaces" described in the later-filed and more complete *nonprovisional* '650 and '668 Patents must be large enough to dispense medication or hold work papers. Initially, the statements cited from the provisional applications that state that prior carts do not have sufficient work space for medication preparation or to hold work papers were only made in the provisional patent application, however, these statements, and other similar statements, were left out of the subsequently filed nonprovisional application that issued into the '650 and '668 Patent which demonstrates that the Applicant did not intend the claims of the '650 and '668 patents be so limited. Nowhere in the '650 or '668 Patents does it state that the work surface(s) are large enough to dispense medication or to hold work papers. When converting the provisional application into the more complete nonprovisional application, the Applicant broadly claimed the "work surface" in claim 1 without specifying a specific size. Following the reasoning of the cases cited above, Defendant Howard provides no

argument why one specific embodiment of work surface described in the incorporated provisional application should override the patentee's clear intent to claim the term "work surface" broadly in claim 1 of the '650 (nonprovisional) Patent without specifying or limiting the size of the work surface.

Defendant has failed to overcome the presumption that the term "work surface" should be afforded its plain and ordinary meaning by failing to provide evidence of clear and unmistakable redefinition or disclaimer. Defendant has also failed to overcome the presumption that different claims have different meanings (claim differentiation).

8. "wherein the work surface is movable:"

As stated in Plaintiff's opening brief, the parties' proposed definitions for this term poses the same issues as the term "work surface" discussed above. Defendant Howard argues for essentially the same definition as proposed for the term "work surface" - e.g., that it be "curved" and "large enough to dispense medications or hold work papers." For the same reasons provided above for the term "work surface," Plaintiff respectfully submits that the plain and ordinary meaning of this term/phrase should apply and a no construction is necessary as a jury would have no problem understanding the scope of this term/phrase.

9. "compartment(s):"

As explained in detail in Plaintiff's opening brief, Plaintiff Capsa's definition of "compartment" is more accurate as it is more consistent with the plain and ordinary meaning of the term "compartment" as it used in the intrinsic evidence (e.g., claims and description of the '650 and '668 Patents). Defendant Howard's definition is imprecise and vague as it is unclear what a "small" chamber is (versus a medium or large size compartment) and does not distinguish between types of containers that are enclosed (compartments) and other kinds of unenclosed containers (e.g., side bins, cup holders, barcode scanner holders) discussed in the '650 and '668 Patents.

Plaintiff's definition of "compartment(s)" is consistent with the plain and ordinary meaning of the term, *including dictionary definitions that define the term using the word "enclosed*," while Defendant's proposed definition limits the term to only "small" compartments without providing any clear evidence demonstrating that the patent Applicant intended to redefine "compartment" to cover only "small" compartments. None of the claims of the '650 and '668 Patents recite limitations to the size of the claimed compartments or limit the compartments to only "small" compartments. There are no statements in the intrinsic evidence, clear or otherwise, that demonstrates that the patent Applicant redefined the term "compartments" to disclaim coverage over medium size or large size compartments. Defendant has failed to overcome the heavy presumption of applying the plain and ordinary meaning of the term "compartment(s)" as proposed by Plaintiff.

10. "at least one compartment," "disposed above the compartment(s)"/"disposed above a top of the at least one compartment:"

Term/Phrase (claims)	Plaintiffs' Proposed Construction	Defendants' Proposed Construction
"at least one compartment" ('650 patent (cl. 1)	Plain and ordinary meaning	One or more compartments.
"disposed above the compartment(s)" / "disposed above a top of the at least one compartment" ('668 patent (cl. 3, 4) ('650 patent (cl. 1)	Plain and ordinary meaning (in view of other proposed definitions)	Above all the one or more compartments.

Defendant's proposed definition of these terms results in an illogical and impossible claim and result. Defendant proposes that all of these differently worded claim terms should be construed exactly the same as being disposed "above all the one or more compartments." Defendant's proposed definition also violates principal of claim construction that differently

worded claims are presumed to have different meanings. In particular:

- Claim 3 of the '668 Patent claim a *plurality* of "compartments" and then recites the actuator is "disposed above the *compartments*." '668 Patent, claim 3 (emphasis added).

- Claim 4 of the '668 Patent claims "at least one compartment" and later recites the actuator is "disposed above *the* compartment." '668 Patent, claim 4 (emphasis added).

- Claim 1 of the '650 Patent claims "at least one compartment" and later recites the work surface is "disposed above a top of the *at least one* compartment," and also recites "the actuator is "disposed above *the* compartment." '650 Patent, claim 1 (emphasis added).

Thus, three different claims from the '650 and '668 Patents at-issue and each worded differently yet Defendant proposed definitions defines all these different terms the same: as being disposed "above all the one or more compartments." Accepting Defendant's proposed definition results in an impossible claim and result. For example, if claim 3 of the '668 Patent recites that there are a plurality of "compartments" then it follows that the language of claim 3 that recites that the actuator is "disposed <u>above the compartments</u>" cannot mean disposed "<u>above all the *one* or more compartments</u>" as urged by Defendant. In other words, there cannot be just "one" compartment in the embodiment of the invention claimed in claim 3 of the '668 Patent. Accepting Defendant's proposed definition would lead to an illogical and impossible result.[9]

---

[9] Applying Defendant's proposed definition also results in illogical claim scope in other places of the claims. For example, claim 3 of the '668 Patent and claim 1 of the '650 further claims: "at least one compartment for containing *an item* within *the compartment*…". Substituting Defendant's proposed definition of "one or more compartments" for the claim term "at least one compartment" into this claim language would result in the following illogical claim:

"[one or more compartments] for containing an item within the compartment…"

Defendant's proposal to define all these different worded claim phrases exactly the same also violates the established principles of claim differentiation. It is presumed that the patent Applicant when drafting the claims of the '650 and '668 Patents intended to word claims differently to have different meanings. The patent Applicant clearly wrote claim 3 of the '668 Patent to include a plurality of compartments and that the actuator is "disposed above the *compartments* [plural]." Yet the patent Applicant wrote claim 4 of the '668 Patent and claim 1 of the '650 Patent differently by claiming "disposed above *the* compartment" and "disposed over the above a top of the *at least one* compartment," - or in other words referring back to at least one requisite compartment – not all the compartments as Defendant urges. These claims were worded differently by the patent Applicant and it is presumed they have different meanings. Plaintiff's proposal to apply the plain and ordinary meanings of these terms gives weight to the differences in the worded claims.

There is no need to further define these terms as these terms as a jury would have no problem understanding the scope of these words. These terms mean exactly what they say. For example, "the compartments" means a plurality of compartments and thus the claim phrase "disposed above the compartments" means a disposed over the plurality of compartments – there is no need to further define these terms. '668 Patent, claim 3. Similarly, the terms "at least one compartment" and "disposed above *the* compartment" means what it says also. For example, the claim term reads on a cart having an actuator disposed over at least one compartment – not all the compartments. '668 Patent, claim 4 (emphasis added). This is consistent with the ruling of *Howmedica* case which has almost the same fact pattern as the present case**.** *Howmedica Osteonics Corp. v. Wright Medical Technology, Inc*., 540 F.3d 1337, 1347, 1352 (Fed. Cir. 2008). The Court in *Howmedica* found that the plain language of a claim requiring "at least one" condylar element and then imposing geometric requirements for "the condylar element" means that "only *one* condylar element meeting the geometric limitations of the claim is required to bring [the accused

device] within the scope of the claim." *Id*. at 1347 (emphasis added). Consistent with Plaintiff's Capsa's position, the *Howmedica* Court then found that the terms did not require further construction and that the plain and ordinary meanings applied. *Id*.

11. "drawer slides:"

As explained in Plaintiff's opening brief, Defendant's proposed definition of "drawer slides" cannot be correct as it would exclude all embodiments described in the '650 and '668 patents (in other words, none of the example embodiments described in the '650 and '668 Patents would infringe the claims found in the '650 and '668 Patents). Such a result cannot be correct. A construction which excludes the preferred embodiment is rarely, if ever correct. PPC *Broadband, Inc. v. Corning Optical Communs. RF, LLC*., 815 F.3d 747, 755 (Fed. Cir. 2016).

Again, Defendant merely points to one example embodiment of a drawer slide disclosed in the '650 and '668 Patents and argues that the claimed invention is limited to this described example even though claims do not recite such limitations. The portions of the '650 and '668 Patents Defendant cites to do not even support their own proposed definition. For example, the drawer slides described in the '650 and '668 Patents allow the telescoping portions of the height adjustment mechanism to slide with respect to each other and are not "configured to support a drawer" at all as required by Defendant's definition.

Based on the foregoing, Plaintiff respectfully submits that the Court adopt the plain and ordinary meaning of the term "drawer slides" and submits that Defendant's alternative definition is improper and incorrect as it limits the term "drawer slides" to one example type of drawer slide and excludes all embodiments of the invention described in the '668 Patent.

B. Disputed Claim Terms from the ’016 Patent:

1. “means for automatically adjusting a height of the platform:”

The only question to resolve is to identify all the corresponding structure(s) described in the ’016 Patent for performing the stated function of “automatically adjusting a height of the platform.” Contrary to Defendant’s arguments, the “embodiment 3” described in the ’016 Patent, is a structure associated with the stated function. Defendant’s entire argument is based on the wrong meaning of “automatically adjusting.” Defendant argues that the function of “automatically adjusting” requires the use of a user’s height, however, this is contrary to the explicit definition of the term “automatically adjusting” provided in the ’016 Patent. The ’016 Patent clearly defines the phrase “automatically adjusting” as “moving by a non-manual force to a predetermined position, the predetermined position being based on information obtained by or contained within a device such as a controller, processor, computer, or database.” ’016 Patent, col. 9:16-21 (putting the term “automatically adjusting” in quotation marks in the patent description and giving an explicit definition). This explicit definition says nothing about using the user’s height to automatically adjust the platform height. Using the user’s height to automatically adjust the height of the work platform is just one embodiment of the invention of the ’016 Patent. ’016 Patent, col. 1:49-61. Defendant’s definition of “automatically adjusting” also violates the rule of claim differentiation because using the height of the user to automatically adjust the platform is recited in dependent claims 2 and 3 – not independent claim 1.

When using the explicit definition of “automatically adjusting” given in the ’016 Patent, it follows that the “embodiment 3” structure disclosed in the ’016 Patent also accomplishes the function of automatically adjusting the platform height (e.g., the processor is programmed to automatically (or non-manually) adjust the work platform based on the user’s stored preferred *platform* height – as opposed to using the stored height of the *user*). Defendant’s proposed

definition is incomplete and inaccurate as it completely leaves out the "Embodiment 3" structure. Based on the foregoing, Plaintiff respectfully submits that Plaintiff's definition is the correct and complete definition under 35 U.S.C. § 112, para. 6.

C. Disputed Claim Terms from the '527 Patent:

1. "platform:"

As explained in Plaintiff's opening brief, although Plaintiff argues for the plain and ordinary meaning of the word "platform," as does Defendant, Plaintiff respectfully requests that this term should be construed to clarify to the jury that the term "platform" has a different meaning than "work platform" as used in the '527 Patent.

Defendant argues in its reply, that use of the word "substantially" in a claim adds confusion. Many federal courts have found that the use of the word "substantially" in patent claims is not ambiguous or vague. Relative terms, such as "substantially," do not automatically render a claim indefinite. In fact, there are many cases (more recent than the cases cited by Defendant) from the Federal Circuit Court of Appeals, and other federal District Courts, that hold that the term "substantially," and other terms of degree are proper and definite. *Deere & Co. v. Bush Hog, LLC*, 703 F.3d 1349, 1359 (Fed. Cir. 2012); *Edgewell Pers. Care Brands, LLC v. Albaad Massuot Yitzhak, Ltd.*, Civil Action No. 15-1188-RGA, 2017 U.S. Dist. LEXIS 70242, at *5-6 (D. Del. May 9, 2017); *Ansell Healthcare Prods. LLC v. Reckitt Benckiser LLC*, 2017 U.S. Dist. LEXIS 38297, at * *6-7 (D. Del. Mar. 16, 2017); *Cree, Inc. v. SemiLEDs Corp.*, 2012 U.S. Dist. LEXIS 39582, at *56 (D. Del. Mar. 21, 2012) (the Court finding: "Federal Circuit law is clear that "substantially" is not prohibitively indefinite: "the term 'substantially' is a meaningful modifier implying 'approximate,' rather than 'perfect.'") Based on the foregoing, use of the term "substantially flat"

in Plaintiff's proposed plain and ordinary meaning of "substantially flat" means what it says – approximately flat.[10]

2. "track:"

As explained in detail in Plaintiff's opening brief, Plaintiff proposes a plain and ordinary meaning of "track" whereas Defendant's definition is limited one specific example of a "track" described in the '527 Patent without evidence of clear redefinition or disclaimer from the intrinsic evidence. Plaintiff submits that its proposed definition would not read on a mouse sliding on a mouse tray because a mouse tray is not a mechanical component that another component slide "along." However, if the Court believes that Plaintiff's proposed definition is too broad, the Court may choose to add the further limitations to Plaintiff's proposed definition that the mechanical component "serves as a guide to the other component as it slides on the track."

3. "arm:"

As explained in Plaintiff's opening brief, Plaintiff is merely proposing a plain and ordinary meaning of the term "arm" supported by the intrinsic evidence and dictionary definitions cited by Plaintiff. Defendant argues in its brief that Plaintiff's proposed definition is incorrect as it uses the word "device" in the definition even though "device" is not used in the '527 Patent to describe the "arm."[11] Defendant points to no case law to support its proposition that a court must construe a claim term with only words explicitly used in a patent. If this were the rule, some of Defendant's proposed definitions would also be automatically eliminated. For example, Defendant uses the term "slender part" in its definition of "arm" but neither of those terms are found in the '527 Patent.

---

[10] If the Court disagrees, Plaintiff respectfully submits that the Court may choose to delete the word "substantially" from Plaintiff's proposed definition and adopt the rest of the definition.

[11] The dictionary definition cited to by Defendant in its opening brief even defines an "arm" as a part of a "structure," "machine," or "instrument," words that are similar to the word "device" as used in Plaintiff's proposed definition. Dkt. 46, pg. 43.

As another example, Defendant uses the term "chamber" and "receptacle" in its definition of "compartment" yet those terms are not used in the '650 or '668 Patents to describe the compartments. Notwithstanding, contrary to Defendant's allegations, Figure 4 of the '527 Patent reproduced in Defendant's opening brief does show the arm projecting from the track (and the track is a device).

Plaintiff's definition excludes the preferred embodiment of the described invention of the '527 Patent as the described "arm" is arguably not slender but relatively wide when compared to other components of the cart. Arms can also be "wide" or "thick" and it is improper to limit the invention to a specific shape. Additionally, Defendant's proposed definition is too broad as it would read on other components like flag poles and or radio antennas.

4. "substantially coextensive:"

As explained in detail in Plaintiff's opening brief, Defendant Howard has failed to rebut the heavy presumption that patent claim terms should be construed according to their plain and ordinary meanings. None of Defendant's arguments submitted in its reply brief provide evidence of clear redefinition or disclaimer of the term "substantially coextensive" but limits the term to one example embodiment of the invention.[12]

[12] Although Plaintiff agrees with Defendant's argument that the invention of the '527 Patent does not relate to a "period of time," Plaintiff proposed definition states "the same space *or* period of time." This is the plain and ordinary meaning of the term and it does read on the described embodiments of the '527 Patent. If the Court disagrees, Plaintiff respectfully submits that the Court may choose to delete the words "or period of time" from Plaintiff's proposed definition while keeping the rest of the language.

RESPECTFULLY SUBMITTED, this the 16th day of June, 2023.

CAPSA SOLUTIONS LLC

BY: */s/ James L. Kwak*
JAMES L. KWAK

Jeffrey S. Standley (Ohio Bar #0047248)
James Lee Kwak (Ohio Bar #0066485)
F. Michael Speed, Jr. (Ohio Bar #0067541)
Standley Law Group LLP
6300 Riverside Drive
Dublin, Ohio 43017
Telephone: (614) 792-5555
Facsimile: (614) 792-5536
Email: jstandley@standleyllp.com
jkwak@standleyllp.com
mspeed@standleyllp.com
litigation@standleyllp.com

Matthew D. Miller (MSB #99210)
Copeland, Cook, Taylor, and Bush, PA
P.O. Box 17619
Hattiesburg, MS 39404
110 Sheffield Loop, Hattiesburg, MS 39402
Telephone: (601) 264-6670
Facsimile: (601) 264-5660
Email: mmiller@cctb.com

Attorneys for Plaintiff
Capsa Solutions LLC