UNITED STATES PATENT AND TRADEMARK OFFICE

BEFORE THE PATENT TRIAL AND APPEAL BOARD

HOWARD INDUSTRIES, INC.

Petitioner,

v.

CAPSA SOLUTIONS LLC

Patent Owner.

IPR2023-01275

U.S. Patent No. 8,215,650

PATENT OWNER'S RESPONSE

UNDER 37 C.F.R. § 42.120

TABLE OF CONTENTS

I. Introduction 1
- **A. Statement of the Relief Requested** 1
- **B. Summary of Patent Owner's Argument** 2

II. Background 3
- **A. Summary of the Technology at Issue** 3
- **B. Overview of the '650 Patent** 3
- **C. Litigation** 16

III. Legal Standards 16

IV. Level of Ordinary Skill in the Art 17

V. Claim Construction 18
- **A. "Compartment(s)"** 19
- **B. "[C]ompartment is *disposed in* the portion of the work platform projecting [relative to the height adjustment mechanism] in the *forward* direction, and the compartment is configured to permit a user facing in the rearward direction to access the item within the compartment"** 23
  - **1. Implicit Redefinition/Disclaimer of "Disposed In" (in context of other claim terms)** 24
    - **a. All embodiments described describe the compartments entirely in or contained in the forward projecting portion of the work platform** 24
    - **b. Accepting Petitioner's argument would lead to an impossible result that is inconsistent with the other claim terms that require a user "facing in the rearward direction to access the item within the compartment"** 25

2. "Forward" Means "in Front" 28
C. "Work Surface" 31

VI. GROUNDS 1 and 2: Petitioner Fails to Show that any Challenged Claim Is Unpatentable Under Grounds 1-2 31
A. None of the cited references, including Clark, discloses compartment(s) "disposed in the portion of the work platform projecting [relative to the height adjustment mechanism] in the forward direction" 32
1. Even assuming the keyboard tray cavity of Clark is a "compartment", the keyboard tray is not contained in the portion of the work platform projecting in front of the height adjustment mechanism 32
2. The vague, one-sentence, mention of a "drawer" in Clark does not specify that it is "disposed in the portion of the work platform projecting [relative to the height adjustment mechanism] in the forward direction" 34
B. Petitioner has failed to articulate a motivation to combine/modify Clark to reach the claimed invention 37
C. The Other Cited References of Manner, Gillis, and Hartman do not Cure the Deficiencies of Clark 47

VII. GROUND 3: Petitioner Fails to Show that any Challenged Claim is Unpatentable under Ground 3 48
A. General Overview of Reeder 48
B. None of the cited references, including Reeder, discloses compartment(s) "disposed in" a height adjustable work platform 52
C. None of the cited references, including Reeder, discloses compartment(s) "disposed in the portion of the work platform projecting [relative to the height adjustment mechanism] in the forward direction" 54

D. Petitioner has failed to articulate a motivation to combine/modify Reeder to reach the claimed invention 57

E. The Other Cited References of Manner, and Gillis do not Cure the Deficiencies of Reeder 60

VIII. Secondary Considerations of Nonobviousness

A. Commercial Success and Praise 61

B. Copying 62

C. Long Felt Need and Failure of Others 62

IX. Conclusion 63

TABLE OF AUTHORITIES

Cases

Cao Lighting, Inc. v. GE, No. 20-681 (MN)
2022 U.S. Dist. LEXIS 84058 (D. Del. May 10, 2022) 28

In re Hedges
783 F.2d 1038 (Fed. Cir. 1986) 59

Iredto Access, Inc. v. Echostar Satellite Corp.
383 F.3d 1295 (Fed. Cir. 2004) 28

Richmond v. Forever Gifts, Inc.
(Tex.) No. 3:14-CV-0583-K, 2015 U.S. Dist. LEXIS 68809 (N.D. Tex. May 27, 2015).....21

SkinMedica, Inc. v. Histogen Inc.
727 F.3d 1187 (Fed. Cir. 2013) 21, 22

Johns Manville Corp. v. Knauf Insulation, Inc.
(IPR2018-00827, Paper 9) at 13 38

Phillips v. AWH Corp.
415 F.3d 1303 (Fed. Cir. 2005) 20

TQ Delta LLC v. Cisco Sys.
942 F.3d 1352 (Fed. Cir. 2019) 58

Tris Pharma Inc. v. Actavis Laboratories FL, Inc.
No. 21-1495, 2022 U.S. App. LEXIS 18630 (Fed. Cir. July 7, 2022).....34

Volvo Penta of the Ams., LLC v. Brunswick Corp.
81 F.4th 1202 (Fed. Cir. 2023) 63

W.L. Gore & Assocs., Inc. v. Garlock, Inc.
721 F.2d 1540 (Fed. Cir. 1983) 59

Statutes

35 U.S.C. § 282(b) 17

Regulations

37 CFR § 42.73 1

37 CFR § 42.100(b) 17

37 CFR § 42.120 1

Other

Consolidated Trial Practice Guide, 73-74 14

https://www.schoolphysics.co.uk/age11-14/Mechanics/Statics/text/Stability_/index.html 45

Merriam-Webster.com Dictionary, Merriam-Webster, https://www.merriam-webster.com/dictionary/compartment 20

Merriam-Webster.com Dictionary, Merriam-Webster, https://www.merriam-webster.com/dictionary/forward 29

TABLE OF EXHIBITS

EX. #	EXHIBIT DESCRIPTION
2001	Declaration of Ben-Tzvi in Support of Patent Owner's Preliminary Response to '668 and '650 IPR Petitions.
2002	US Pat. 6,721,178 to Clark, which is a continuation of the '220 Clark reference cited by Petitioner.
2003	Office Action Response of 3/28/2012 in '650 Patent File History at pgs. 8-12 (the entire OAR is attached).
2006	Declaration of James Kwak, with Attachment A (email from Howard counsel agreeing to the definition of "compartment(s)" proposed by Patent Owner in the parallel litigation).
2007	'650 File History, Notice of Allowance, 5/14/2012.
2008	Report and Recommendations of the Special Master regarding claim construction.
2009	PLACEHOLDER
2010	Transcript of Deposition of Ronald Kemnitzer
2011	U.S. Patent No. 5,961,134 to Kemnitzer et al. (including Congleton)
2012	Declaration of Ben-Tzvi in Support of Patent Owner's Response to '668 and '650 IPR Petitions.
2013	Declaration of James Kwak (authenticating documents attached to '650 and '668 IPR Responses and authenticating dictionary definitions cited herein).
2014	Excerpts of Dictionary Definitions Cited Herein

2015	https://www.schoolphysics.co.uk/age11-14/Mechanics/Statics/text/Stability_/index.html Website pages
2016	RESERVED
2017	U.S. Patent No. 9,367,061 to Miller
2018	Declaration of Craig Rydingsward
1001	U.S. Patent No. 8,215,650 ("the '650 Patent")
1002	Prosecution File History of U.S. Patent No. 8,215,650
1003	Declaration of Mr. Ronald B. Kemnitzer ("Kemnitzer") (filed by Petitioner with Petition for *Inter Partes* Review)
1004	CV of Mr. Ronald Kemnitzer
1006	U.S. Patent Publication No. 2002/0044059 to Reeder et al. ("Reeder")
1010	U.S. Patent No. 6,493,220 to Clark ("Clark")
1013	Claim Construction Order for U.S. Patent No. 8,215,650 in Rubbermaid Inc. v. Ergotron, Inc., No. 3:12-cv-416-RJC-DSC, Dkt. 42 (W.D.N.C. Mar. 11, 2014)

Abbreviations:

When citing to deposition transcripts, the format **page#:line number**s will be used. For example, "Ex. 2010 at 9:5-15" means deposition exhibit 2010 at page 9, lines 5-15.
"Ex. 2010 at 10:3-11:12" means deposition exhibit 2010 at page 10, line 3 through page 11, line 12.

When citing to patents, the format **column, line numbers** will be used. For example, '668 Patent, col. 7 ll. 33-35 refers to column 7, lines 33-35.

I. Introduction

Patent Owner, Capsa Solutions LLC (hereinafter also "Capsa" or "Patent Owner"), hereby provides a Response under 37 CFR § 42.120 to the Petition for *Inter Partes* Review filed on August 3, 2023 (hereinafter also the "Petition") by Petitioner, Howard Industries, Inc. (hereinafter also "Howard" or "Petitioner"). The Petition submitted by Howard requests *inter parties* review and cancellation of claims 1-3, 5-6, and 8 of US Pat. No. 8,215,650 (hereinafter also "the '650 Patent"), entitled "Medical cart, medication module, height adjustment mechanism, and method of medication transport". The earliest priority date listed on the face of the '650 Patent is February 24, 2003[1]. The only independent claim at issue is claim 1.

A. Statement of the Relief Requested

Patent Owner respectfully requests that the Board deny all of the grounds for unpatentability asserted by Petitioner relating to the '650 Patent. Pursuant to 37 CFR § 42.73, Petitioner's challenges to the claims should be rejected in this case because Petitioner fails to demonstrate that any of the claims of the '650 Patent challenged are unpatentable. Petitioner has failed to meet its burden of proving by a preponderance of the evidence that the claims at-issue are obvious in view of the

[1] While the effective filing date of the '650 Patent is not stipulated at this stage, the Petition does not turn on the assigned priority date.

prior art cited.

B. Summary of Patent Owner's Argument

Petitioner seeks to invalidate the '650 Patent based on the same prior art (Clark) and substantially the same arguments overcome during the original prosecution of the Patents-at-issue. A review of the intrinsic record demonstrates that the Examiner got it right when allowing the patents-at-issue in view of Clark. In arguing that the original Examiner made a mistake in allowing the patent over Clark, Petitioner ignores the arguments made in overcoming Clark over 12 years ago, applies an impossibly broad interpretation of the claim phrase ("compartment is disposed in the portion of the work platform projecting [relative to the height adjustment mechanism] in the forward direction"), and primarily relies on one vague sentence in Clark relating to a possible drawer that lacks any specific details on its location or configuration. Overturning the grant of the '650 Patent would be a disservice to the prior examination by the USPTO over 12 years ago and the public notice function of patents and their prosecution histories.

None of the prior art relied on by Petitioner teaches or suggests the claimed limitations of compartment(s) "disposed in the portion of the work platform projecting [relative to the height adjustment mechanism] in the forward direction". Because the claimed cart of the '650 Patent contains the compartment(s) in a front-projecting portion of the work platform, the patented cart has a lower center of

gravity ("COG"), increased stability, and is less prone to toppling/tipping over when compared to the primary references of Clark and Reeder that mount the workstation entirely to the top of the height adjustment mechanism (e.g., outside of the front-projecting portion).[2] Because none of the references teach or suggest this limitation recited in the only independent claim at-issue, and because there is no evidence of a motivation to modify the references to reach the claimed invention, or that there is a reasonable expectation of success to do so, Petitioner has failed to meet its burden to prove obviousness.

II. Background

A. Summary of the Technology at Issue

At a high level, the '668 and '650 Patents are directed to medical carts which improve workplace efficiency and ergonomics. *See e.g.,* '650 Patent, col. 1 ll. 42-col. 2 ll. 5.[3] These carts are quickly movable about a medical facility, such as room to room in a hospital, and facilitate many important functions such as accessing and dispensing medications or medical supplies at the cart, and performing other duties

[2] The other secondary references relied upon by Petitioner (e.g., Manner and Gillis) are not relied upon by Petitioner for the limitation relating to disposing the compartment in the forward-projecting portion of the work platform and thus do not cure the deficiencies of Clark and Reeder.
[3] The specifications/descriptions of the '650 and '668 Patent are the same.

at the cart. *See e.g., id.* Prior carts lacked ergonomic and efficient designs and some of the advanced capabilities of today's carts. *E.g., id.*

B. Overview of the '650 Patent

The claimed invention provides a mobile medical cart station with enhanced ergonomics for nurses and other medical staff. *E.g.,* '650 Patent, Abstract. Prior to the '650 and '668 patents, no one in the industry had invented a mobile medical cart with height adjustable compartments and work surface(s) as part of a unified, compact work platform as recited in the claims at-issue or knew how to realize the same. *See* '650 Patent, claim 1. Although carts with height adjustable work surfaces and keyboard trays (e.g., workstations for computers) were known, these known carts lacked enclosed storage compartments (e.g., for storing medications and medical supplies) that are also adjustable in height. Because these carts have to be mobile and light enough for nurses to easily move them around a hospital, nobody in the industry, prior to the '668 and '650 Patents, knew how to integrate relatively heavy compartments, and stored items within them, into a height adjustable work platform without sacrificing mobility, stability and weight constraints. In other words, the top-mounted (top-heavy) prior art carts do not have the needed stability for supporting compartments in a height adjustable workstation due to their higher center of gravity (COG). Ex. 2012, ¶ 25.

The inventors of the '650 Patent were the first to successfully incorporate *compartment(s) into a height adjustable work platform while maintaining a stable configuration with a lower COG,* allowing the compartments to be adjustable in height so nurses and other healthcare providers do not have to constantly bend over to obtain items stored in the compartments.

The height adjustment mechanism that allows the work platform, including compartments, to move up and down in height is described in one embodiment as a gas piston driver encased in a telescoping casing. See '650 Patent, col. 8:15-32, Figure 10b (perspective view showing inner telescoping casing 420 that moves in and out of the outer casing 410).

Fig. 10B

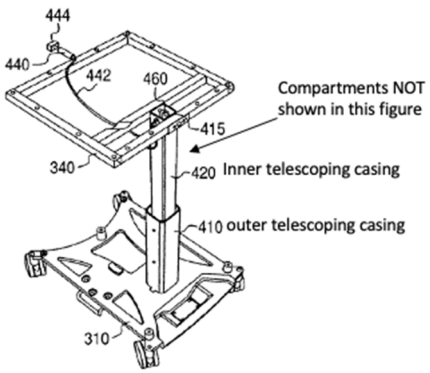

The inventors of the '650 Patent were the first to solve the problems of the top-heavy prior art carts by configuring the cart so that the compartment is "*disposed in* the portion of the work platform projecting [relative to the height adjustment mechanism] in the *forward* direction" as recited in the claims at issue. Configuring the inventive cart in this specifically claimed fashion allows the cart to be more compact with a lower COG unlike the top-mounted carts of the Clark and Reeder references relied upon by Petitioner. The Patent Office agreed with this reasoning

during the prosecution of the related '650 Patent in overcoming the Clark reference.

Ex. 2012, ¶ 26-28.

The only independent claim of the '650 Patent at-issue (claim 1) is reproduced below.

What is claimed is:

1. A cart comprising:

a work platform including a work surface and at least one compartment for containing an item within the compartment, wherein the work surface is disposed above a top of the at least one compartment;

a base configured to be movable in at least a rearward direction; and

a height adjustment mechanism for adjusting a height of the work platform relative to the base, wherein the height adjustment mechanism is configured to releasably position the work platform at a plurality of heights, the height adjustment mechanism comprising:

a driver configured to releasably position the work platform; and

an actuator for controlling the driver,

wherein the base includes a portion projecting, relative to the height adjustment mechanism, in a forward direction that is substantially opposite to the rearward direction,

wherein the work platform includes a portion projecting, relative to the height adjustment mechanism, in the forward direction, wherein the compartment is disposed in the portion of the work platform projecting in the forward direction, and the compartment is configured to permit a user facing in the rearward direction to access the item within the compartment,

wherein the actuator is disposed above the compartment and on the portion of the work platform projecting in the forward direction, and

wherein the work surface is movable relative to a remainder of the work platform from an extended position to a non-extended position.

The challenged claims require, among other limitations, a height adjustable work platform that includes a compartment and a work surface. *E.g.,* '650 Patent, claim 1. The compartment(s) of the work platform project in a forward direction

from/relative to a height adjustment mechanism so that a medical provider may stand in front of the cart ("facing in the rearward direction") to access items stored within the compartment(s). *Id., see also e.g.,* '650 Patent, col. 4 ll. 33-37. Exemplary figures with annotations from the '650 Patent in this regard are provided below to provide a generalized understanding of certain important claim features:

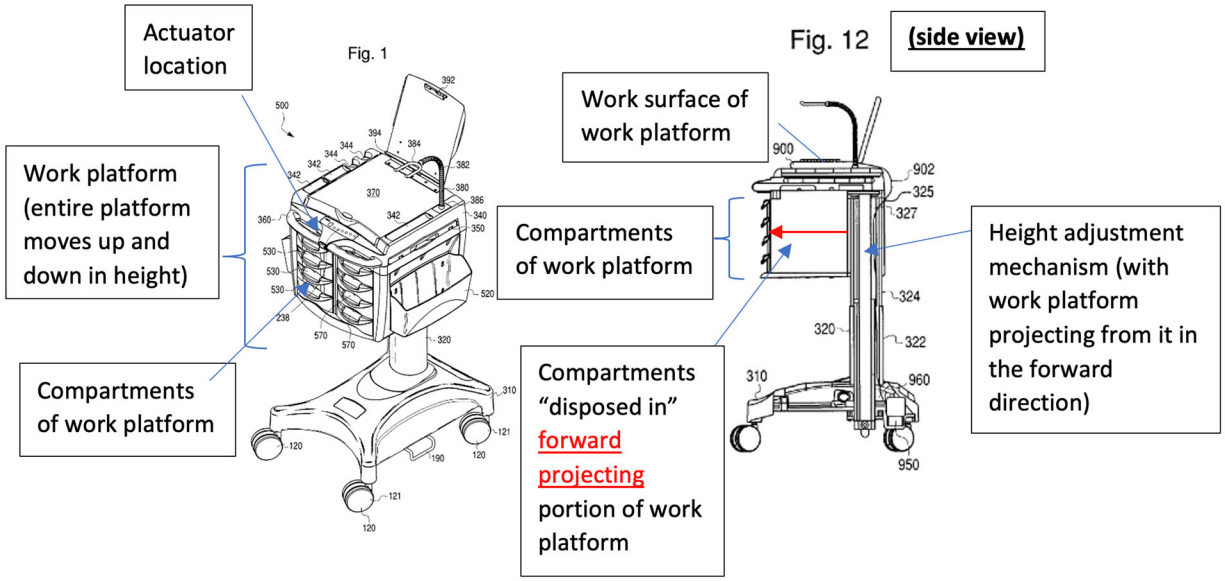

As particularly visible in the side view of Fig. 12 of the '650 Patent (annotated), the compartment(s) are "disposed in the portion of the work platform projecting [relative to the height adjustment mechanism] in the forward direction" (see annotated red arrow pointing in the forward (front) direction).[4] Placing the compartments in front of the height adjustment mechanism results in a more stable cart with a centralized,

[4] There is no embodiment described in the '650 Patent where the compartments, or any part of the compartments, are disposed outside of a front-projecting portion of the work platform.

lower COG unlike the prior art carts of Clark and Reeder that have workstations mounted entirely to the top of the height adjustment mechanism. Ex. 2012, ¶ 33-34.

To demonstrate this advancement, an exemplary, hypothetical, embodiment of the cart of the '650 Patent, derived from figure 12, is reproduced below with the compartments highlighted in orange and the height adjustment mechanism highlighted in yellow. If the cart of the '650 invention was configured, hypothetically, to be top-heavy like the carts of Clark and Reeder, the resulting arrangement would be essentially as depicted on the left (showing work platform, including compartments, mounted on top of the centrally located height adjustment mechanism). The exemplary inventive design of the '668 and '650 Patents is depicted on the right, which is more compact and balanced and has a lower COG. In other words, because the compartment(s) of the patented '650 cart are contained in the portion of the work platform projecting in front of the height adjustment mechanism, they are positioned lower on the cart which lowers the COG providing more stability to the cart. The annotated embodiment shown on the left has a higher COG that is more prone to toppling over, similar to the carts of Clark and Reeder that mount the entire workstation to the top of the centrally positioned height adjustment mechanism.

Fig. 12 of '650 Patent annotated to, hypothetically, show compartments (orange) mounted on top of height adjustment mechanism (yellow) and not "forward" or to the "front" of it as claimed. Top-mounting the workstation leads to a top heavy configuration more prone to tipping over.

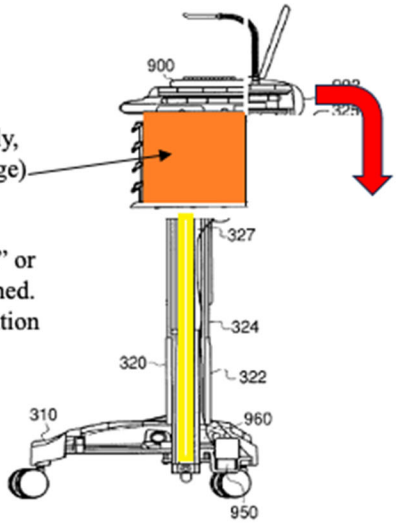

Fig. 12

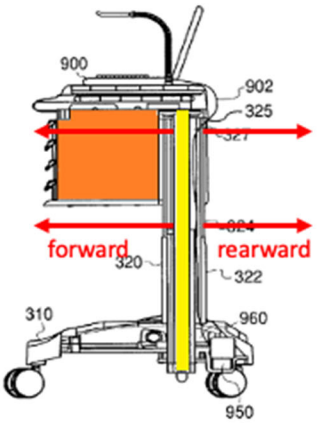

Fig. 12 showing compartments disposed in "forward" or front projecting portion which leads to a cart having a lower center of gravity then top mounted carts like Clark.

Ex. 2012, ¶ 35-36.

U.S. Patent No. 9,367,061 to Miller, another patent to a medical cart filed well *after* the '650 Patent, also discusses similar problems with medical carts tipping over when "maneuvered over uneven or slanted surfaces", and how "a lower center of gravity" can "enhance the stability of the cart and reduce the likelihood of the cart tipping over". Ex. 2017, col. 18:4-24; Ex. 2013, Kwak Decl., para. 4. One solution to lower the COG of the cart proposed by this patent to Miller is to increase the weight of the base portion. *Id*. This is not an ideal solution as it increases the weight of the cart making it harder for nurses to push the cart around the hospital. Notably, this patent also copies the invention of

Fig. 21a, Miller patent (filed well after the '650 and '668 Patents) showing compartments/drawers contained in front of the height adjustment column to lower COG and increase stability to prevent tipping of the cart when moving over uneven surfaces. Ex. 2017, col. 18:4-50.

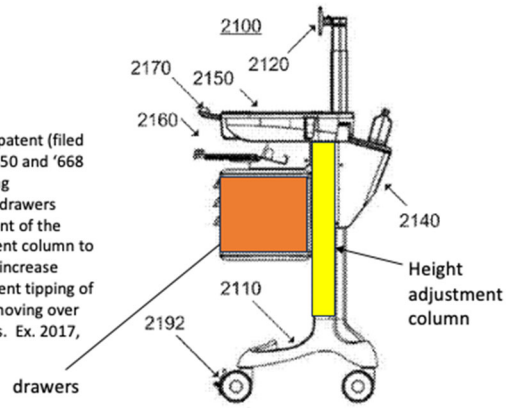

FIG. 21a

the '650 Patent in disposing the compartments entirely in front of the height adjustment mechanism **112** in order to lower the COG to increase stability of the cart. Ex. 2017 at Figure 1 and 21a; col. 18:18-50; Ex. 2012, ¶ 37.

<u>'650 File History</u>:

A review of the '650 File History demonstrates that the Petitioner makes substantially the same arguments made and overcome during the original prosecution of the '650 Patent. As discussed in more detail throughout this response, the Clark reference (relied upon Petitioner as a primary reference) was effectively cited during the original prosecution and was overcome. Clark is cited on the face of the '668 Patent and an equivalent[5] was extensively discussed and overcome during prosecution of the related and co-challenged '650 Patent.

Figure 1 below from Clark illustrates a side view of the workstation of Clark (work surface and keyboard tray **12**) centrally mounted to the top of a height adjustment column **22**.

[5] Ex. 2002, US Pat. 6,721,178 to Clark, which is a continuation of the Clark reference cited by Petitioner. The claims at issue in the '650 IPR Petition filed concurrently with the '668 IPR are substantially similar to the claims at issue from the '668 Patent. Thus, Petitioner's arguments made in the '668 IPR are very similar to the arguments made in the '650 IPR. For example, all independent claims at issue in the related '650 and '668 Patents recite limitations to a cart having a height adjustable work platform, including compartment(s), where the compartment(s) are disposed in a forward-projecting portion of the work platform. 650 Patent, claim 1.

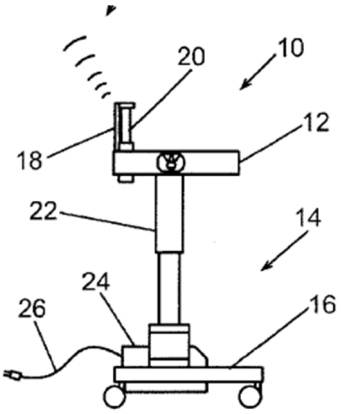

During the original prosecution, the Applicant of the '650 Patent and the Examiner conducted an interview where the Applicant discussed proposed amendments to the pending claims as well as an argument that there were "structural compatibility" issues with combining the teachings of the Clark and Ellefson references. See Ex. 1002, Interview Summary, 3/21/2012. In Examiner's summary of the interview, the Examiner noted that if the Applicant amended the claims as proposed and provided an argument "directed to the structural issues associated with the combination of Clark et al. and Ellefson" that these steps "would likely be persuasive in overcoming the rejections." *Id*. (see below excerpt).

Continuation of Substance of Interview including description of the general nature of what was agreed to if an agreement was reached, or any other comments: The inventive cart was briefly discussed with a view to the specific elements constituting the various movable work surfaces at the top of the cart (elements 370 and 350). Further, applicant has tentatively proposed amending each of the independent claims to include:
a. [claim 1]: "wherein the work surface is disposed above a top of the at least one compartment…wherein the work surface is movable relative to a remainder of the work platform from an extended position to a non-extended position"
b. [claim 9]: "wherein the movable platform and the work surface are disposed above a top of the at least one compartment."
c. [claim 16]: "wherein the secondary work surface and the movable platform are positioned above a top of the at least one compartment."
The examiner commented that as regards the proposed amendment to claim 1, that the combined base and modifying references (e.g., Clark et al. and Rice et al.) would not reasonably meet a claim with these further limitations. As regards the claims initially including some recitations directed to movable work surfaces (which claim 1 initially did not include), the examiner noted that currently the critical modifying reference would be the reference to Ellefson, and there was some further discussion directed to the structural compatability of the Ellefson reference, with the examiner suggesting that in combination with the amendment, an argument directed to the structural issues associated with the combination of Clark et al. and Ellefson would likely be persuasive in overcoming the rejections as currently set forth.

In the next response, the Applicant amended the claims as proposed in the interview and made the arguments relating to the structural incompatibility of Clark with Ellefson and the other cited references. For example, the Applicant argued:

Furthermore, one of ordinary skill in the art would not incorporate the teachings of Rice, Murphy, and Ellefson into the workstation of Clark so as to arrive at a height-adjustable work platform with a movable work surface located above a compartment. For example, if one of ordinary skill in the art had tried to incorporate the pivotal trays 48, 50, and 52 of Ellefson into the workstation of Clark, the resulting work station would be top heavy if the trays were deployed. The result is that the deployed trays would make the workstation of Clark unstable so that it would be easily knocked over. The reason that the pivotal trays can work in the tool chest of Ellefson is that a tool chest contains heavy tools so as to prevent the instability, a condition that is lacking in Clark. In other words, the overall design of the tool chest of Ellefson (including its lower center of gravity) permits the use of pivotal trays while the workstation of Clark (with its higher center of gravity) does not. Accordingly, one of ordinary skill in the art would not combine the teachings of Clark, Rice, and Ellefson so as to arrive at a height-adjustable work platform with a movable work surface located above a compartment. Thus, claim 1 is allowable over Clark, Rice, and Ellefson.

> Similarly, one of ordinary skill in the art would not have had a reason to incorporate any particular feature on Murphy into the workstation of Clark because Murphy is designed to be low to the ground (that is, a lower center of gravity) and modifying the workstation of Clark (with its high center of gravity) based on the teachings of Murphy would likely make the resulting workstation top heavy such that it would be easily knocked over. Accordingly, one of ordinary skill in the art would not combine the teachings of Clark, Rice, and Murphy so as to arrive at a height-adjustable work platform with a movable work surface located above a compartment. Thus, claim 1 is allowable over Clark, Rice, and Murphy.

See e.g., Ex. 2003, OAR of 3/28/2012 in '650 Patent File History at pgs. 8-12. The next action was a notice of allowance. *Id*., *see* Ex. 2007, '650 File History, Notice of Allowance.[6]

The carts of Clark (and now Reeder) were overcome during prosecution because the Examiner accepted the argument that 1. the top-mounted workstation of Clark, with its higher COG, does not have the adequate stability to support additional components/"features" because it would become top heavy and more easily knocked over, and, thus 2. a PHOSITA, concerned about cart stability, would not be motivated to modify the cart of Clark, with its higher COG, to make it even more top-heavy by adding additional components into the workstation because the carts

[6] These arguments made during original prosecution overcoming Clark provides evidence that the '650 Applicant disclaimed coverage over carts like Clark (and now Reeder) that have a workstation/components mounted entirely on top, and to the rear, of a height adjustment mechanism (e.g., disposed outside a forward-projecting portion of the work platform) because they have a higher COG and are not as stable (more easily knocked over). Petitioner ignores these arguments made by the '650 Applicant and attempts to invalidate the '650 Patent with the same art and arguments previously overcome. *See infra* section V.B.

modified in this manner would be more unstable and would not work for their intended purposes (*e.g.,* they would be more susceptible to toppling over from the extra weight). In other words, prior to the '650 invention, *conventional wisdom was to keep the top workstation portion as light and unencumbered as possible in order to keep the cart's COG lower and more stable*. Because the inventive carts of the '650 and '668 patents have a lower COG, they are more stable and can support a heavier work platform that may also include extendable work surfaces and compartments. This is a distinction argued before the Office with regard to Clark – an argument the Office rightfully agreed with.

The Petitioner ignores[7] these findings by the original Examiner and now similarly argues that the '650 Patent is obvious in view of modifying the workstation of Clark by adding alleged compartments into the height adjustable workstation of Clark. Thus, Petitioner makes substantially the same arguments that were overcome during the prosecution of the related '650 Patent (*i.e.*, Petitioner's argument merely

[7] Petitioner's expert testified that he failed to address these issues relating to COG (top-heavy and instability arguments) in the '650 file history in his declarations submitted in support of the IPRs and that he wished he would have addressed them in hindsight. Ex. 2010, pg. 9:17-24; 10:22-11:4. Because Petitioner failed to address the stability issues and the higher COG ("top heavy") arguments made in the '650 file history in its Petition, even though they could have, Petitioner is barred from raising new arguments such as citing to new prior art or making new arguments relating to a motivation to combine in their reply brief. Consolidated Trial Practice Guide, 73-74. In other words, Petitioner is barred from raising new evidence or arguments necessary to make out a *prima facie* case for obviousness. *Id*.

substitutes other alleged compartments for the pivotal trays and other components of the Ellefson/Murphy references cited by the patent Examiner during original prosecution.) Petitioner and Petitioner's expert simply ignore these prior arguments made in overcoming Clark. For example, Petitioner completely fails to even address how Petitioner's proposed modification of adding compartments to the workstation of Clark (and Reeder) is different than the Examiner's prior consideration of Clark in combination with Ellefson or Murphy and fails to address, much less overcome, critical arguments made during prosecution in overcoming Clark (e.g., Clark's unstable/top-heavy design which is prone to toppling due to additional weight from alleged modifications to the workstation). As the Petition fails to reasonably distinguish the Examiner's prior consideration of Clark, and Reeder is, in pertinent part, substantially the same as Clark, the Board should reject Petitioner's obviousness arguments against the challenged claims.

The remaining secondary references are cited by Petitioner for other reasons and do nothing to cure these fundamental distinctions (*i.e.,* the addition of the secondary references does not amount to new arguments that cure the higher COG/instability deficiencies of Clark previously considered nor does Petitioner cite

to them for such purposes).[8] Because independent claim 1 is not obvious in view of the alleged combinations, as argued herein, the dependent claims at-issue are also not obvious. Ex. 2012, ¶ 38-44.

C. Litigation

The '650 Patent is currently involved in litigation between Petitioner and Capsa. The litigation was instituted by Capsa filing a Complaint on May 12, 2022 in the U.S. District Court for the Southern District of Mississippi, which has been assigned Case No. 2:22-cv-00065-HSO-BWR. A *Markman* Hearing, including for many of the claim terms discussed herein, has been fully briefed by the Parties and a hearing before an appointed special master took place on October 18, 2023. The Special Master provided his Report and Recommendations Regarding Claim Construction.[9] Ex. 2008. The related and co-challenged '668 Patent is part of the same parallel litigation. The case has been administratively closed pending the outcome of these IPRs.

III. Legal Standards

[8] *I.e.*, Petitioner relies on the secondary reference of Manner only for the limitation relating to the location of the actuator, Gillis for the arcuate work surface limitations, and Hartman for the gas spring only recited in dependent claim 6.
[9] This case was administratively closed prior to receiving a claim construction order from the District Court.

In an *inter partes* review, claims are "construed using the same claim construction standard that would be used to construe the claim in a civil action under 35 U.S.C. § 282(b), including construing the claim in accordance with the ordinary and customary meaning of such claim as understood by one of ordinary skill in the art and the prosecution history pertaining to the patent." 37 CFR § 42.100(b).

The Parties have fully briefed the Court in the parallel litigation and a *Markman* hearing has been held on the disputed claim terms. The parties are waiting on a claim construction order. Notably, the claim construction order from the Western District of North Carolina cited by Petitioner was subsequently vacated. Petition at pg. 8.

For the sake of completeness, Patent Owner further notes that various claim terms remain disputed by the Parties as evidenced in the arguments below. Especially when properly construed, the cited art clearly fails to teach or suggest the elements in the manner claimed.

IV. Level of Ordinary Skill in the Art

Patent Owner's position on the definition of a Person of Ordinary Skill in the Art (PHOSITA or POSA) as submitted in the parallel litigation is essentially re-submitted herewith.

A PHOSITA in the 2003-2004 timeframe of the '668 and '650 Patents would have had a bachelor's degree in a pertinent discipline involving mechanical

> product design, such as mechanical engineering, with 2-3 years of experience in in the design, manufacture, or analysis of mechanical devices. Alternatively, a POSITA would have been a person with a 2-year mechanical engineering diploma and had 4-6 years of experience in in the design, manufacture, or analysis of mechanical components and devices.

Petitioner submits a somewhat different, and broader, definition. Petition at pg. 7. The difference is notable particularly as it supports fields, such as industrial design, that do not require the same level of hard sciences as Patent Owner's definition. In this regard, Petitioner's supplied expert testimony from Mr. Kemnitzer comes from an industrial designer. *E.g.,* Ex. 1004 at ¶ 4-6. Patent Owner respectfully submits that its definition of a PHOSITA should be adopted. Notwithstanding, the Petition should be denied under either party's definition of a PHOSITA as Petitioner has failed to meet its burden of establishing a *prima facie* case of obviousness. Ex. 2012, ¶ 45-47.

V. Claim Construction

Petitioner fails to expressly adopt or set forth any claim definitions. While certain claim construction briefing documents are provided for "reference", it is unclear if Petitioner actually intends for the Board to adopt such definitions, aside from the "work surface" term. *E.g.,* Petition at pg. 7-9. Ironically, this is a term that need not be construed for purposes of this preliminary response. Patent Owner

expressly sets forth appropriate definitions herewith for certain key claim terms below including the term "compartment(s)" which the Petitioner agreed to in the ongoing, parallel litigation. Ex. 2006; Ex. 2008, Report and Recommendations Regarding Claim Construction, pg. 15.[10] Because Petitioner has agreed to the definition of "compartment(s)" in the ongoing, parallel litigation, this definition requiring "enclosure" should be applied for this IPR proceeding. *Id*., Ex. 2012, ¶ 48.

A. "Compartment(s)"

After the Petitioner filed the '668 and '650 IPR Petitions at-issue, Petitioner agreed to adopt the following definition for this term in the on-going parallel litigation: "[a]n enclosed space for containing an item." *See*, *e.g.,* Ex. 2006, Ex. 2008, pg. 15. This proposed definition of "compartment" as being *"enclosed"* is consistent with the definition adopted by the Western District of North Carolina. *See* Petition Exhibit 1013, pg. 6 (the W.D.N.C. defining "compartment" as used in the '650 Patent as "a drawer or other type of container that is enclosed when inserted into the work platform of which it forms a part.") The Petitioner should not be allowed to argue for a broader construction in the filed IPR Petitions in arguing for invalidity (*e.g*., Petitioner arguing that "compartments" read on unenclosed storage

[10] This case was administratively closed prior to receiving a claim construction order from the District Court.

trays and keyboard tray cavities), especially when Petitioner subsequently agreed to a more narrow definition in the parallel litigation.

Patent Owner submits that this definition of "compartment" requiring it to be "enclosed" (not open) is the correct definition under claim construction principles under the *Phillips* standard that applies to this proceeding.[11] *Phillips v. AWH Corp.*, 415 F.3d 1303 (Fed. Cir. 2005). This definition is consistent with the teachings of the intrinsic evidence and is consistent with the ordinary meaning of "compartment" as being "enclosed".

Although extrinsic evidence is not needed to construe the term "compartment" as the term is not ambiguous in view of the intrinsic evidence, Plaintiff cites to the dictionary definitions that confirm the plain and ordinary meaning of the term as proposed by Capsa as an "enclosed" space. *See, e.g.,* "Compartment: 2. One of the parts into which an enclosed space is divided." *Merriam-Webster.com Dictionary, Merriam-Webster*, https://www.merriam-webster.com/dictionary/compartment. Accessed Apr. 2023 and May 2023. See Ex. 2014 (dictionary excerpts); Ex. 2013, ¶2.

Based on the foregoing, Plaintiff respectfully submits that "compartment" should be afforded its plain and ordinary meaning, or as "an enclosed space for

[11] The Patent Examiner applied the broadest reasonable interpretation to the claim terms during the original prosecution of the '650 and '668 Patents-at-issue.

containing an item" as the definition that one of ordinary skill in the art would understand as the meaning of the term based on a review of the intrinsic evidence. *See, e.g., Richmond v. Forever Gifts, Inc.* (Tex.), No. 3:14-CV-0583-K, 2015 U.S. Dist. LEXIS 68809, at *25 (N.D. Tex. May 27, 2015) (defining "battery compartment" as an "*enclosure* for holding a cell or cells that furnish electricity") (emphasis added).

Alternatively, assuming an ordinary meaning of "compartment" does not require enclosure, Patent Owner's definition should be adopted because the term has been redefined by the '650 Patent by implication and consistent usage throughout the '650 Patent. *See SkinMedica, Inc. v. Histogen Inc*., 727 F.3d 1187, 1203-04 (Fed. Cir. 2013) (finding redefinition can come from consistent usage of the term throughout the description in a manner consistent with only a single meaning and through implicit disclaimer by distinguishing the term from other terms). For example, the '650 Patent never describes the compartments as anything but enclosed. The '650 Patent teaches that the "… compartments 530 enable a user (e.g., a nurse) to separately maintain medication for particular patients or for a particular room." '650 Patent, col. 7 ll. 34-36. The '650 Patent goes on to explain, over and over, that the compartments may be lockable (*e.g.,* col. 8 ll. 1-5), may be labeled drawers (e.g., col. 2 ll. 15, col. 7 ll. 30-35), and states the work platform "houses the at least one compartment". (col. 2:38-39).

The description of the '650 and '668 Patents repeatedly distinguishes the claimed "compartment" from unenclosed storage spaces. '650 patent, Figure 1 (showing compartments **530** as pull-out enclosure-type containers or drawers); col. 3:14-15; 33-37; col. 4:30-34 (expressly distinguishing the "compartment" from other unenclosed storage spaces such as top bins **342**, side bins **520,** cup holders **344**, and barcode scanner holder **380**). Similar to the *SkinMedica* case, the '650 Applicant went even further to distinguish their disclaimed embodiment then using a disjunctive "or" by explicitly describing Figure 7 (reproduced here below) as a medical cart "*without* compartments" yet the unenclosed side bin **520** storage unit and unenclosed cavities are shown as part of the medical cart in Figure 7. *Id*. at col. 3:33-35. This unambiguous, explicit description confirms that unenclosed items like side bins and open cavities are distinguishable and implicitly disclaimed from "compartments".[12]

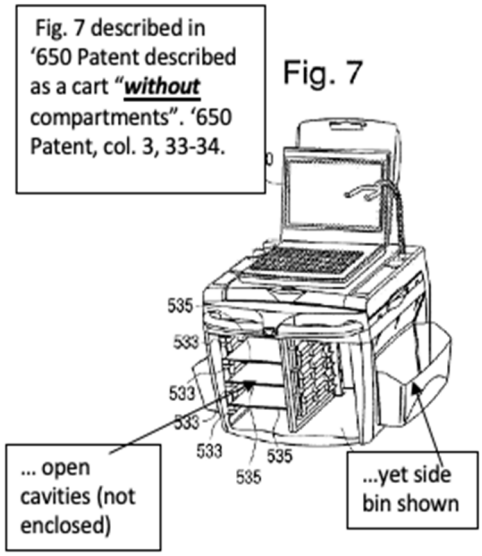

Based on the foregoing, Patent Owner respectfully submits that the definition of "compartment" as **"an enclosed space for containing an item"** is

[12] In the *SkinMedica* case, the patentee used the distinctive phrase "as opposed to" when differentiating between bead and 3-dimensional cultures.

the definition that one of ordinary skill in the art would understand as the meaning of the term based on a review of the intrinsic evidence. Ex. 2012, ¶ 50-54.

B. "[C]ompartment is *disposed in* the portion of the work platform projecting [relative to the height adjustment mechanism] in the *forward* direction, and the compartment is configured to permit a user facing in the rearward direction to access the item within the compartment"

Regardless of whether "compartment" is defined as "enclosed" or not, none of the cited references relied upon by Petitioner teach or suggest the claimed limitations of a compartment "disposed in the portion of the work platform projecting [relative to the height adjustment mechanism] in the forward direction". The issues for the PTAB to decide in construing this claim phrase are:

1. whether this phrase at issue, particularly the terms "disposed in" means the compartment is partially in or is entirely in (i.e., "contained in") the portion of the work platform projecting in the forward direction; and

2. whether the phrase at issue, particularly the term "forward" means in front of the height adjustment mechanism or whether it can include portions that are over or on top of the height adjustment mechanism.

Patent Owner respectfully submits that the Applicant of the '650 Patent, in the context of the rest of the claim terms, redefined the term "disposed in" to mean entirely in or "contained in" by clear, implicit redefinition/disclaimer and the term

"forward" means "in front" (either because it is the plain and ordinary meaning or in the alternative by clear disclaimer by disclaiming workstations that are mounted entirely on top of the height adjustment mechanism based on their high COG and unstable design). Ex. 2012, ¶ 55-56.

1. Implicit Redefinition/Disclaimer of "Disposed In" (in context of other claim terms)

There are multiple reasons supporting Patent Owner's position that the phrase at issue means that the compartment is contained in (or is entirely in) the portion of the work platform projecting in the forward direction.

a. All embodiments described describe the compartments entirely in or contained in the forward projecting portion of the work platform

First, all embodiments described in the '650 and '668 Patents show that the compartments are disposed entirely in the portion of the work platform projecting from the height adjustment mechanism in the forward direction. '650 and '668 Patents, Figure 12 (annotated side view here showing no part of the compartments (shown in orange) extending outside the portion of the work platform projecting [relative to the height adjustment mechanism (shown in yellow)] in the forward direction or to the front of the height adjustment mechanism.

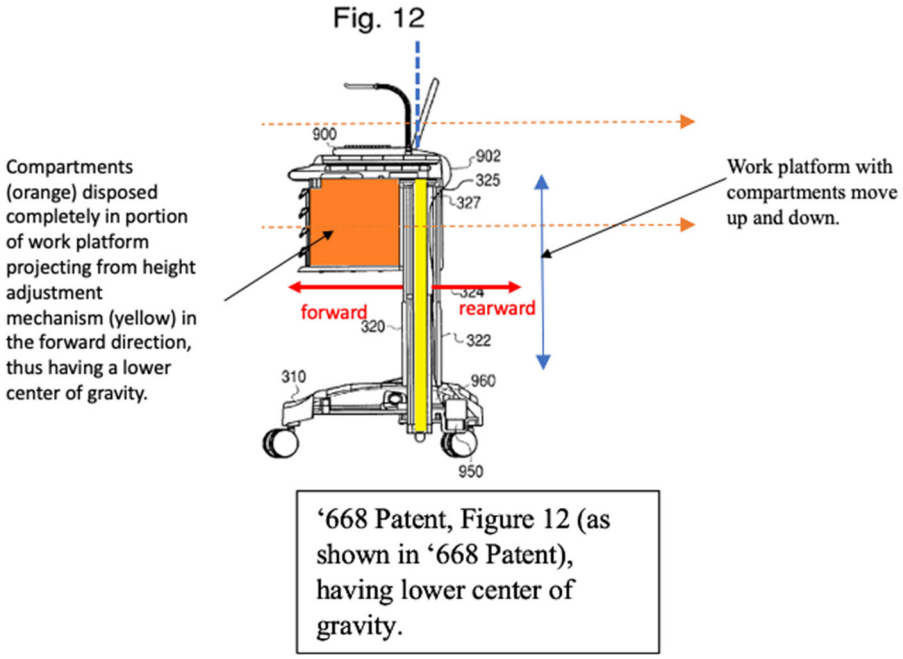

'668 Patent, Figure 12 (as shown in '668 Patent), having lower center of gravity.

There are no embodiments of the invention described in the '650 Patent where the compartments are disposed outside the portion of the work platform projecting [relative to the height adjustment mechanism] in the forward direction. For example, there are no embodiments described in the '650 Patent having an enclosed compartment disposed on top of the height adjustment mechanism (as taught by Clark and Reeder) or that extends rearward or to the sides of the height adjustment mechanism.

b. Accepting Petitioner's argument would lead to an impossible result that is inconsistent with the other claim terms that require a user "facing in the rearward direction to access the item within the compartment"

In fact, it is impossible for the compartments in the cart of the '650 and '668 Patents to extend outside the forward (front) projecting portion of the work platform (e.g., to the rearward direction from the height adjustment mechanism) because the height adjustment mechanism would be in the way thus preventing a user from accessing items stored in the compartment as required by the claims at issue. In order to extend the compartments in the rearward-projecting portion of the work platform would require a large hole to be bored through the middle of the compartments for the height adjustment mechanism to go through which would prevent access to items stored in the compartments. For example, the compartments/drawers as shown in the annotated, hypothetical, Figure 12 below would not be functional as they could not be pulled open in such a configuration as the height adjustment mechanism goes through the middle of the drawers preventing them from being pulled out by the user. Additionally, if the drawers were extended, hypothetically, so that they projected in the rearward direction as shown below, users standing in front of the cart would not be able to access those items as the claims of the '650 Patent at-issue envision because the height adjustment mechanism would block access to that rearward portion.

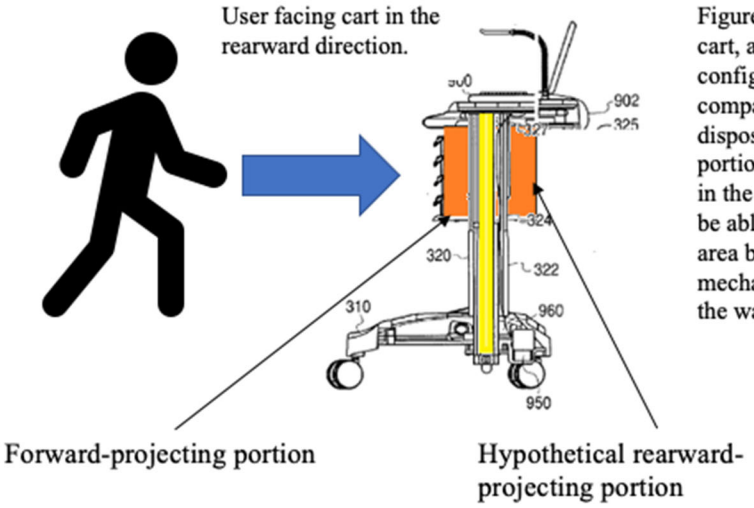

Figure 12, '650 Patent (side view of cart, altered to show impossible configuration). In other words, if the compartments (in orange) are disposed in a rearward-projecting portion here as shown, users facing in the rearward direction would not be able to access items stored in this area because the height adjustment mechanism (in yellow) would be in the way.

Petitioner's expert also agreed that Figure 12 of the '650 Patent illustrates a cart where it would be impossible for a user to access items positioned rearward of the height adjustment mechanism as the height adjustment mechanism would be in the way. Ex. 2010 at pg. 103:19-104:6; 134:15-135:7 (Petitioner's expert also stating, in discussing the cart of Clark, that a PHOSITA would understand the drawers to be in the forward position in order to be accessible by the user).

Thus, the Applicant clearly disclaimed compartments that have portions that extend outside the portion of the work platform that projects from the height adjustment mechanism in the forward direction as evidenced by the '650 description and claims that require a user to able to access stored items from the front of the cart. Based on the foregoing, it is clear from the intrinsic evidence that "disposed in" in the context of claim 1 means entirely in or "contained in". Ex. 2012, ¶ 57.

The District Court of Delaware similarly found that the claim phrase "within" meant "entirely within" or "contained in", even though the Court acknowledged that the ordinary meaning of "within" does "not require that an object 'within' another thing be entirely within that thing". *Cao Lighting, Inc. v. GE*, No. 20-681 (MN), 2022 U.S. Dist. LEXIS 84058, at *15 (D. Del. May 10, 2022). The District of Delaware construed the term "within" more narrowly because the context of the other claim terms and specification demonstrated that applying the ordinary meaning would lead to an impossible result. *Id*. (finding that if "the [claimed] 'interior volume' extends outside of the enclosure, it would extend into space – and there'd be no possibility of creating a vacuum or container for gas, as the specification envisions"). "Even when guidance is not provided in explicit definitional format, the specification may define terms by implication…" *In re Abbott Diabetes Care, Inc*., 696 F.3d 1142, 1148-50 (Fed. Cir. 2012) citing to *Iredto Access, Inc. v. Echostar Satellite Corp*., 383 F.3d 1295, 1300 (Fed. Cir. 2004) (finding that nothing in the specification suggests or hints that the claimed sensor can include external wires while "repeatedly, consistently, and exclusively" depicting sensor without external wires).

2. "Forward" Means "in Front"

Patent Owner respectfully submits that the plain and ordinary meaning of "forward" as meaning "in front" applies. "Forward" defined as "to or toward what

is ahead or in front". Merriam-Webster.com Dictionary, Merriam-Webster, https://www.merriam-webster.com/dictionary/forward; "Forward" defined as "toward the front: or toward what is ahead or in front". The Britannica Dictionary, https://www.britannica.com/dictionary/forward. Ex. 2014 (dictionary excerpts); Ex. 2013, Kwak declaration, ¶2. See, e.g., *Fin Control Sys. Pty v. Oam,* 265 F.3d 1311, 1317-18 (Fed. Cir. 2001) (defining terms "lateral" and "side" consistent with their plain and ordinary dictionary definition); Ex. 2010, at 105:7-21 (Petitioner's expert agreeing that "forward" means "towards the front").

Alternatively, if "in front" is not considered the plain and ordinary meaning of "forward", the Applicant clearly redefined the term as such by disclaiming workstations that are mounted on top of or over the height adjustment mechanism. First, as discussed above in *supra* section V.A., all embodiments disclosed in the '650 dispose the compartments in the portion of the work platform in front of the height adjustment mechanism.

Additionally, as discussed throughout this response, the Applicant of the '650 Patent consistently asserted that a key aspect of the invention is a lower GOG (which as discussed above is realized by disposing the compartments in the portion of the work platform projecting in front of the height adjustment mechanism as opposed to mounting the workstation on top of it). *See supra*, section II.B. of this IPR Response (discussing '650 file history statements). Specifically, the Applicant overcame Clark

during prosecution by criticizing Clark because it is "top-heavy" (i.e., the workstation of Clark, with keyboard tray, is mounted entirely on top of the height adjustment mechanism) resulting in a cart having a higher COG without adequate stability to support additional components without it being more easily knocked over.[13] Patent Owner respectfully submits that the file history arguments in overcoming Clark demonstrate that the '650 Patent Applicant explicitly disclaimed carts having workstations mounted entirely to the top of the height adjustment mechanism (e.g., carts like Clark and Reeder).

Based on the foregoing, the claim phrase "compartment is *disposed in* the portion of the work platform projecting [relative to the height adjustment mechanism] in the forward direction" in the context of the other claim terms means **"compartment is *contained in* the portion of the work platform projecting in front of the height adjustment mechanism"**. Ex. 2012, ¶ 58-61.

[13] For the purposes of claim construction, it is not necessary to determine if the cart of Clark has a higher COG or is more top-heavy and more unstable than the present invention. It is enough that the '650 Applicant made those arguments for the purpose of determining the scope of the claim (e.g., the Applicant disclaimed coverage over carts like Clark that mount the workstation to the top of the height adjustment mechanism). The expert technical explanation of why the cart of Clark is top-heavy and more unstable when compared to the cart claimed in the '650 Patent will be explained in detail in a later section of this response discussing the motivation to combine/modify and the expectation of success.

C. "Work Surface"

In the parallel litigation, the Parties dispute the definition that should be provided to the term "work surface". *E.g.,* Ex. 1013 at pg. 32. Essentially, Petitioner argues for a narrower definition and Patent Owner argues for plain and ordinary meaning. *Id*. This is the only definition expressly adopted by Petitioner in its Petition. Petition at pg. 9. While Patent Owner maintains its position that plain and ordinary meaning should by adopted, for purposes of this preliminary response the Board need not reach the construction of this claim term for at least the reasons further outlined herein. In other words, the definition of "work surface" (e.g., whether it is curved or not) is not dispositive here as there are other terms recited in the independent claims at-issue that are not taught or suggested by the prior art relied upon by the Petitioner.

VI. GROUNDS 1 and 2: Petitioner Fails to Show that any Challenged Claim Is Unpatentable Under Grounds 1-2

The Petitioner fails to raise a *prima facie* case of obviousness as none of the cited references, including the primary references of Clark and Reeder, teach or suggest all of the limitations of the claims at-issue, because no articulated reasons are provided as to why a PHOSITA would modify the cited references to reach the claimed inventions, and because there would be no reasonable expectation of success in modifying the primary reference of Clark and Reeder as proposed. For example,

Petitioner provides no reasons as to why a PHOSITA would modify the carts of Clark or Reeder to dispose compartment(s) entirely in ("contained in") a forward-projecting portion of the height adjustable work platform or any evidence that there would be a reasonable expectation of success in this regard – instead mistakenly arguing that these references teach such claim elements based on overly broad claim interpretations. Ex. 2012, ¶ 62.

A. None of the cited references, including Clark, discloses compartment(s) "disposed in the portion of the work platform projecting [relative to the height adjustment mechanism] in the forward direction"

1. Even assuming the keyboard tray cavity of Clark is a "compartment", the keyboard tray is not contained in the portion of the work platform projecting in front of the height adjustment mechanism

The Petition fails to raise a *prima facie* case of obviousness as none of the cited references, including the primary reference of Clark, teaches or suggest a compartment "disposed in the portion of the work platform projecting [relative to the height adjustment mechanism] in the forward direction" as required by claim 1.

The side views of the cart of Clark illustrate that the keyboard tray of Clark (even assuming it is a "compartment")[14] is mounted on top of the height adjustment

[14] *This open keyboard tray cavity does not meet definition for the "compartment(s)" as "an enclosed space for containing an item" as agreed to by Petitioner in the ongoing, parallel litigation. See, supra,* section V.A. Clearly, this open keyboard

mechanism and thus is disposed outside a portion that is forward (or in front) of the height adjustment mechanism.[15]

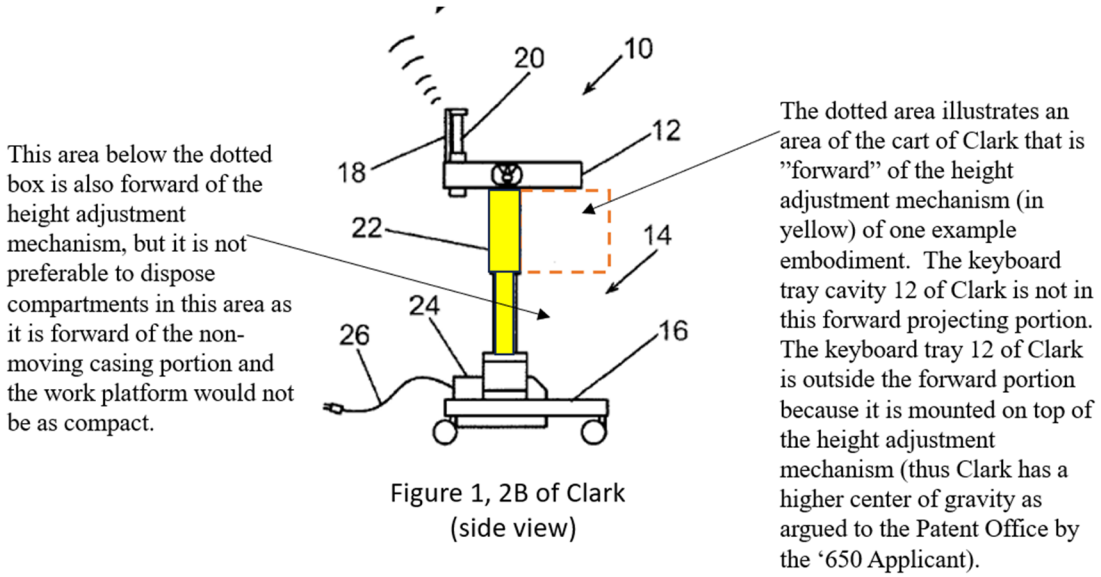

Figure 1, 2B of Clark (side view)

Ex. 2010 at 106:8-25 (Petitioner's expert admitting that placing the compartments forward of the height adjustment mechanism would have a lower COG when compared to a unit that has the compartments mounted entirely on top of the height adjustment mechanism); 94:17-23; 95:5-96:9 (Petitioner's expert admitting that

---

cavity of Clark is not enclosed. Additionally, the keyboard cavity of Clark is not provided for the purpose of separately storing medical items as intended by the '668 and '650 Patents, *e.g.,* medications and medical supplies, because it is already occupied by a pull-out keyboard tray 70, 424 and computer keyboard.

[15] Even if the keyboard tray of Clark is considered to have a forward-projecting portion (which it does not as it is mounted entirely on top of the height adjustment mechanism), ***it is not "disposed in" or entirely contained in a forward-projecting portion because the keyboard tray would also extend in the rearward direction***. In other words, only an air pocket of the keyboard tray would be in a forward-projecting portion.

lowering the horizontal tray 12 of Clark would lower the COG and help make it more stable).

Based on the foregoing, the keyboard tray 12 of Clark, assuming it is an enclosed compartment, does not meet this limitation as it is not contained entirely in the portion of the work platform projecting in front of the height adjustment mechanism. Ex. 2012, ¶ 63-66.

2. The vague, one-sentence, mention of a "drawer" in Clark does not specify that it is "disposed in the portion of the work platform projecting [relative to the height adjustment mechanism] in the forward direction"

While Clark makes an unclear and passing reference to alternatively moving the vertically mounted computer docking station 18 (and attached computer terminal 20) to a supporting drawer or pull-out tray, the details are vague, hypothetical, and aspirational.[16] *E.g.,* '650 IPR Petition at pg. 22 (citing col. 10, ll. 30-33 of Clark). The drawer in question is not illustrated or described in any detail. *See id.* See *Tris Pharma Inc. v. Actavis Laboratories FL, Inc.*, No. 21-1495, 2022 U.S. App. LEXIS 18630 (Fed. Cir. July 7, 2022) (non-precedential), (finding that such aspirational and

[16] For example, the docketing station 18 supports a wireless computer terminal 20 which is displayed to the user, yet it is unclear why or how such a docketing station would be placed into a drawer or how this would be accomplished.

hypothetical references without any data or explanations or why or how the claimed limitations could be accomplished would be dismissed by a skilled artisan).

For example, this one sentence relied upon in Clark does not explain or suggest that such a hypothetical, aspirational, and unillustrated drawer be contained in a *forward* projecting portion of a height adjustable work platform as claimed or how it would be configured or accomplished. *E.g.,* '650 IPR Petition at pg. 22 (citing col. 10, ll. 30-33 of Clark). Instead, this one sentence in Clark vaguely states that such a drawer could be located above or under the tray 12 (in other words "somewhere on the cart"). *Id.* Placing this alleged drawer over the keyboard tray 12 would not reach the claimed invention of the '650 Patent because the alleged tray would be above and outside the forward-projecting portion of the work platform (again top-heavy). As to being placed "under" the tray, Clark never explains specifically where or how such a drawer should be attached. In other words, this one sentence in Clark never explains how far under the tray the drawer should be placed, or whether it is disposed in the alleged work platform as claimed, much less *contained in the portion of the work platform projecting in front of the height adjustment mechanism*. On the contrary, Clark states that the docking station 18 (*without* the drawer) can be mounted to the underside of the horizontal tray, but says nothing about the specific location of the alleged drawer. Clark at col. 10: 34-38. By explicitly stating that the docking station 18 (with attached computer terminal

20) can be mounted to the underside of the tray, but not a drawer, indicates that the inventors of Clark also appreciated that adding a drawer to the computer workstation of Clark was not feasible or desired.[17]

Petitioner's expert admits that this one sentence fails to explicitly state that the alleged drawer should be placed directly under/attached to the keyboard tray 12 as part of a compact work platform and fails to explicitly state the alleged drawer should be contained entirely in a forward-projecting portion of the workstation of Clark as required by the '650 claims at issue as properly construed. Ex. 2010 at 132:1-135:7 (e.g., admitting that the battery at the base of Clark described is "under" the tray 12 and that "under" can mean there is space in between the drawer and the horizontal tray).

[17] Additionally, on page 33 of the '650 IPR Petition, in discussing the claimed limitation of the actuator location, Petitioner draws in a red drawer at the bottom of the alleged work platform of Clark, but nowhere in Clark does it state or suggest that the drawer be disposed in this manner or location and nowhere does Petitioner provide any articulated reason why a PHOSITA would make such a modification or that there is a reasonable expectation of success. This amounts to a conclusory argument. For example, this vaguely described drawer could be placed under the horizontal tray but mounted entirely on top of the center height adjustment mechanism and not disposed in the portion projecting from the height adjustment mechanism in the forward direction. Or a PHOSITA, to maintain stability, could configure the cart similar to Figures 32 and 33 of Reeder where the compartments/drawers are placed as the stationary base of the cart that does not project from the height adjustment mechanism at all.

Based on the foregoing, Patent Owner respectfully submits that Clark fails to teach or suggest a compartment contained in the portion of the work platform projecting in front of the height adjustment mechanism as required by the challenged claims. Ex. 2012, ¶ 67-70.[18]

B. Petitioner has failed to articulate a motivation to combine/modify Clark to reach the claimed invention

Petitioner fails to provide any argument for why a PHOSITA would be motivated to modify the cart of Clark to include compartment(s) "disposed in the portion of the work platform projecting [relative to the height adjustment mechanism] in the *forward direction"* as claimed. Petitioner mistakenly argues that Clark teaches this limitation based on an overly broad claim construction, and thus completely fails to articulate a motivation to combine or modify Clark to reach this limitation or explain how there would be a reasonable expectation of success in doing so. *See* '650 IPR Petition at 30-32, Kemnitzer, 80-81.

[18] In an attempt to read the Clark reference onto the claims at issue, Petitioner improperly attempts to read the alleged drawer or pull-out tray of Clark on both the claimed "work surface" and the "compartment". '650 IPR Petition, pg. 23. Clearly, Clark states the docking station 18 can be supported by a drawer *or* pull-out tray, but not both. Clark, 10:30-33. Petitioner cannot have it both ways - the Examiner did not make a mistake as Petitioner alleges. Notwithstanding, Petitioner's arguments do not cure the other deficiencies of Clark discussed herein.

For example, no articulated reasons are provided as to why a PHOSITA would be motivated to dispose enclosed storage compartments in the workstation portion of Clark at all, much less contained in the portion of the work platform projecting in front of the height adjustment mechanism, or how such a modification would be successful in view of the fact that the workstation of Clark is mounted to entirely on top of the height adjustment mechanism resulting in a design with a higher center of gravity (or "COG").[19] This failure alone amounts to a basis for denying the Petition. *Johns Manville Corp. v. Knauf Insulation, Inc.* (IPR2018-00827, Paper 9) at 13. Because Petitioner fails to articulate any reasons for why a PHOSITA would modify Clark to include a "compartment disposed in the portion of the work platform projecting [relative to the height adjustment mechanism] in the forward direction" as claimed and properly construed, ***Petitioner has failed to meet their burden to demonstrate a prima facie case of obviousness even if Patent Owner does not provide rebuttal arguments. Although a rebuttal argument is not required, Patent Owner has provided counter arguments below***. Ex. 2012, ¶ 71-73.

A PHOSITA would not have been motivated to modify Clark to reach the claim invention, especially the limitations to a "compartment disposed in the portion

[19] This failure is even more glaring because the Examiner, during the original prosecution of the related '650 Patent, found the workstation of Clark could not support additional components in the workstation while maintaining stability due to its top-heavy design (higher center of gravity).

of the work platform projecting [relative to the height adjustment mechanism] in the forward direction" as claimed because:

1. the prior art or other appropriate evidence did not provide a basis for the modification (hindsight is improper);

2. the prior art relied upon by Petitioner did not recognize the unsolved problem or the solution in lowering COG and increasing stability (Petitioner and Petitioner's expert do not even mention stability or center of gravity in the filed Petitions);

3. there is no reasonable expectation of success in modifying the prior art to reach the claimed invention.

As discussed, Clark teaches the opposite of the claimed invention by mounting the workstation entirely on top of the height adjustment mechanism instead of in the forward/front direction. Thus, nowhere in Clark does it teach the containing the compartment(s) in a front-projecting portion as claimed. Clark does not even recognize, or even mention, stability/higher COG of the cart as a problem, much less offer a solution.

Again, as previously discussed and as successfully argued in the '650 file history in overcoming Clark, a PHOSITA would not be motivated to modify the carts of Clark to reach the claimed invention because the entire workstation of Clark is mounted on top of the height adjustment mechanism. Adding relatively heavy

compartments to the workstation of Clark (with its higher COG) would render the cart more unstable and more prone to being knocked over (e.g., thus unsatisfactory for its intended purpose). In other words, a PHOSITA, concerned with cart stability, would side with conventional wisdom at the time and try to keep the top-mounted workstation of Clark, with its higher COG, as light and unencumbered as possible to maintain stability. Thus, not only does Clark fail to teach or suggest such limitations, but a PHOSITA would avoid modifying the top-mounted workstation of Clark with drawers/compartments to preserve balance and stability.

Again, Petitioner makes the same arguments relating to the Clark reference that were overcome during the original prosecution. The Clark reference was similarly overcome during the prosecution of the patents-at-issue in view of other secondary references (like the Ellefson reference) that allegedly taught pivotal trays. *See*, Ex. 2003, '650 file history, Applicant Response and Amendment dated 3/28/2012, pgs. 8-10 (overcoming the Clark reference by stating that a PHOSITA would not modify Clark in this manner because if an additional component (e.g., pivotal tray) was added to the workstation of Clark, with its higher COG, it would be top-heavy, unstable and more susceptible to being knocked over).

Mirroring the arguments made in the prosecution of the '650 Patent in overcoming Clark, if a PHOSITA had tried to incorporate compartments into the height adjustable workstation of Clark, the resulting workstation would be more

unstable and top-heavy, resulting in a workstation of Clark that is more easily knocked over. The compartments can be so located in the cart of the claimed invention because the cart has a lower COG, a condition that is lacking in Clark. Accordingly, a PHOSITA would not be motivated to modify or combine the teachings of Clark so as to arrive at a height-adjustable work platform with compartment(s) "disposed in a portion of the work platform projecting [relative to the height adjustment mechanism] in the forward direction". Ex. 2012, ¶ 74-78.

As a sidenote, in its Order granting institution, the PTAB stated, in reference to Figure 2B of Clark, "the height adjustment mechanism, which supports the modified platform, is located closer to the frontward extended drawer providing a smaller moment arm than if the support is located at the rear of the modified platform. The smaller moment arm appears, based on the present record, to make the platform less susceptible to toppling/knocked over when the drawers are extended." *See* IPR2023-01275 Decision re Institution, pg. 33. Patent Owner respectfully submits that even assuming this is true, this does not change the fact that Clark, with its workstation mounted entirely on top of the height adjustment mechanism, has a higher COG and is less stable when compared to the present invention which has the compartments "disposed in the portion of the work platform projecting [relative to the height adjustment mechanism] in the forward direction." Furthermore, even assuming there is a shorter moment arm in the front, horizontal,

direction, this results in a longer moment arm to the rearward direction which would cause the cart of Clark to be more susceptible to toppling over in the rearward direction which is undesirable. In other words, because these mobile medical cars are designed to roll/move in all directions, stability on all four sides of the cart is desired (not just the front). Ex. 2010, pg. 90:4-22; 91:18-92:20 (Petitioner's expert admitting this fact). Thus, the more relevant consideration here is not the horizontal moment arm as emphasized by the PTAB in its Decision re Institution, but the carts' relative COG and the lever arm through which *gravity* can exert force on the object which is relevant to the tipping angles of objects (e.g., carts) relative to the ground. In other words, as explained in detail below using technical formulas, by disposing the compartments in the forward-projecting portion (and not mounted on top) of the height adjustment mechanism, the COG of the '650 cart is lower, resulting in a smaller lever arm which increases stability of the '650 cart in all directions. Ex. 2012, ¶ 79-80.

Technical Discussion: The stability of an object is closely related to its center of gravity (COG).

Center of Gravity (COG): The COG of an object is the point around which its mass is evenly distributed in all directions. For simple, symmetrical objects like a uniform rod or a sphere, the COG is easy to determine. However, for irregularly shaped objects, it may be more complex to pinpoint.

Stability: The stability of an object refers to its ability to resist tipping over (i.e., toppling/knocked over) when subjected to external forces or disturbances. Stability is influenced by factors such as the base area of the object, the mass distribution, and the position of the COG.

Stability and COG: The relationship between stability and the COG can be understood through the concept of torque. Torque is the tendency of a force to rotate an object about an axis, and it depends on both the magnitude of the force and the distance from the axis of rotation. Ex. 2012, ¶ 81.

Torque Formula: The torque (τ) acting on an object is given by the formula:

$$\tau = mg * d * \sin(\theta)$$

Where:

- mg is the gravitational force applied emanating from Center of Gravity (COG) location of the cart
- d is the distance from the pivot point to the point where the gravitational force is applied (see Figure I created below) –geometrical formulas for calculating d as a function of the tilt angle and object geometry (width and height) can be generated, but this is not necessary to show that the tilt angle at the point the object will tip over will increase as the COG is lowered.
- θ is the angle between the gravitational force vector and the vector pointing from the pivot point to the point of application (the point where the gravitational force line of action intersects with the ground).

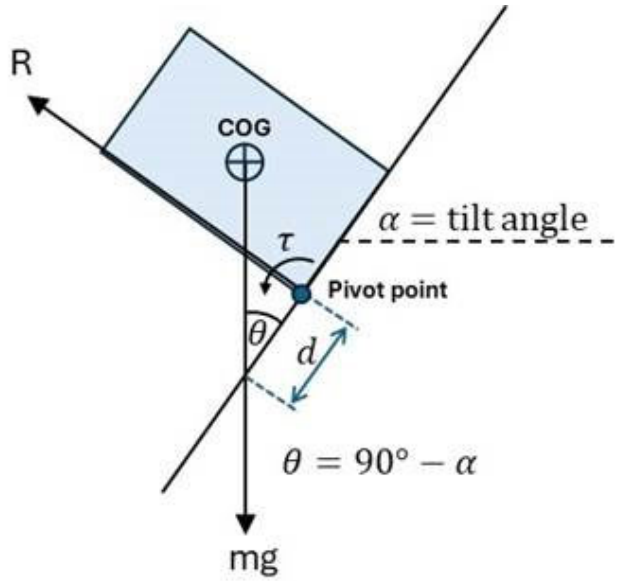

Explanation:

- When an object is disturbed or tilted, gravity exerts a torque (τ) on it, trying to rotate it further in the direction of the tilt.
- The greater the distance between the COG and the pivot (tipping) point, the greater the torque exerted by gravity.
- A lower COG means that the distance between the COG and the base of the object is reduced. Consequently, the torque produced by the force of gravity is minimized.
- With a lower COG, the object is less likely to tip over because it requires a larger external force to generate enough torque to overcome its stability.

In essence, by lowering the COG, the lever arm through which gravity can exert a torque on the object is effectively decreased, making it more stable and resistant to tipping over.

These principles can be illustrated through the tipping angles of automobiles. Ex. 2015, https://www.schoolphysics.co.uk/age11-14/Mechanics/Statics/text/Stability_/index.html

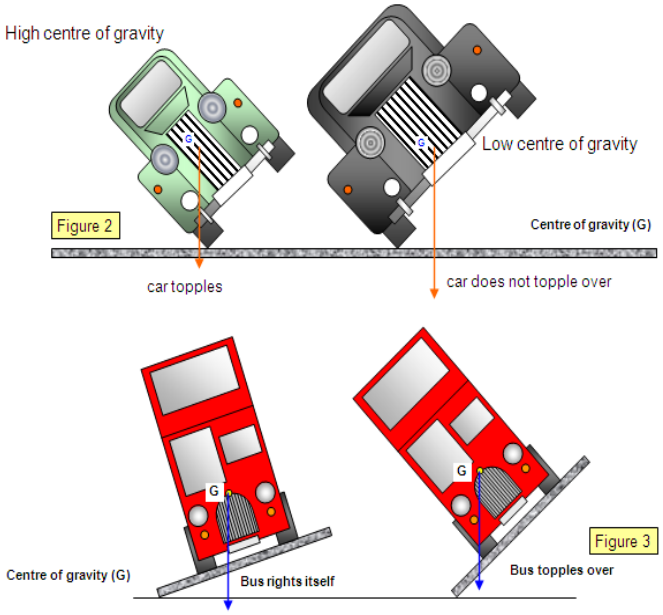

For example, racing cars have a lower COG than buses or truck so they can corner more rapidly without turning over. Another way to increase stability is to increase the area of the base - the bigger the base area the more stable the object. If an object is tilted, it will tip over if a vertical line from its COG falls outside the base (see illustration here showing the point the bus will tip over). The diagrams show that the position of the COG is important in tipping over. *Id*. The higher the COG, the more likely an object is to tip over if it is tilted. For example, the car on the upper left, having a higher COG, will tip easier than the car on the upper right. *Id*.; Ex. 2015; Ex. 2013, ¶3; Ex. 2012, ¶ 82-85.

In fact, Petitioner's own expert Ronald Kemnitzer obtained a patent (U.S. Patent No. 5,961,134 to Kemnitzer) that recognizes the instability of a portable computer workstation when the height adjustable workstation is raised to an upright position and deployed. Ex. 2011; Ex. 2013, ¶5. The '134 Patent, filed in 1997 before

the priority date of the '650 Patent at issue, envisions the use of support members **330, 360** that fold out of the base in order to act as a sort of kickstand to "offset the instability" created by raising a height adjustable computer tray to its upright position (which causes an "upward movement of the center of mass of the entire unit"). *Id*. at col. 5:28-50.

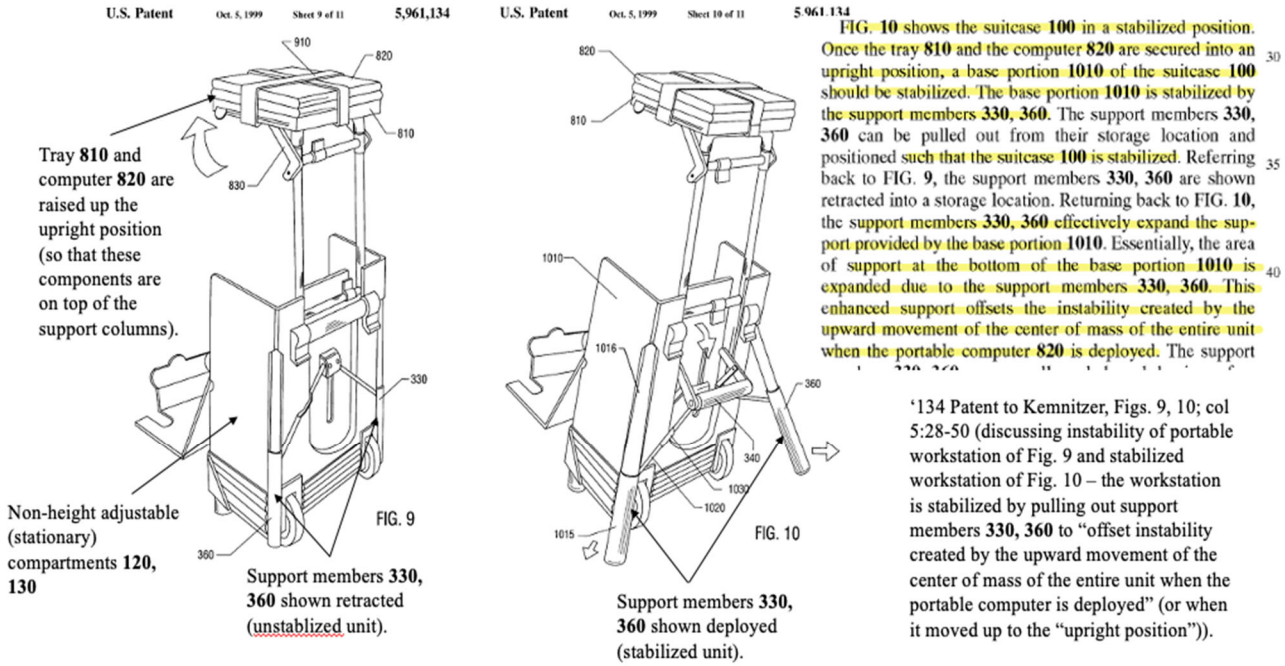

Notably, like the Reeder reference relied upon by Petitioner, the enclosed compartments **120, 130** are placed in a *stationary* base portion as far from the height adjustable workstation as possible while keeping the top-mounted workstation as light and unencumbered as possible in order to keep the COG lower. *Id*. at Figure 1; col. 3:27-33. This provides further evidence that at the time of the '650 invention, nobody in the industry knew how to incorporate enclosed compartments into a height

adjustable work platform while maintaining stability of the portable device. Mr. Kemnitzer expanded the base of his patented cart, and placed the compartments into the stationary base, to offset the instability caused by deploying the tray 810 "into an upright position", but failed to come up with the solution of the '650 Patent of increasing stability by disposing the compartments in a *forward*-projecting portion of the height adjustable work platform in order to lower the COG. *Id*. at col. 5:28-50. Mr. Kemnitzer's invalidity opinions and allegations in support of invalidity of the '650 Patent are now based only on hindsight and by using the teachings of '650 Patent as a blueprint to piece together his invalidity allegations.[20] Ex. 2012, ¶ 86-87.

C. The Other Cited References of Manner, Gillis, and Hartman do not Cure the Deficiencies of Clark

[20] Contrary to the incorrect statements of Petitioner, the Clark reference never states that the opening/cavity for the keyboard tray 70 can be *converted* to a drawer. *See* '650 IPR Petition, pg. 24. Notwithstanding, a PHOSITA would not be motivated to make such a modification to the keyboard cavity of Clark as such a modification would render the Clark reference unsatisfactory for its intended purpose, *i.e.,* converting the keyboard tray cavity to a drawer for supporting a docking station 18 and computer 20 would leave no area for holding the keyboard, and, adding additional drawers to the already-top-heavy cart of Clark would cause it to be more susceptible to toppling over. *See* IPR2023-01275 Decision re Institution, pg. 24-25 (agreeing with this position).

For Grounds 1 and 2, the Petitioner only relies on the Clark reference as teaching the limitation of a "compartment disposed in the portion of the work platform projecting [relative to the height adjustment mechanism] in the forward direction". Petitioner relies on the secondary references of Manner, Gillis, and Hartman for other limitations and/or other dependent claims and, therefore, these references do not cure the deficiencies of the Clark reference discussed above. Ex. 2012, ¶ 88.

VII. GROUND 3: Petitioner Fails to Show that any Challenged Claim Is Unpatentable under Ground 3

A. General Overview of Reeder

Reeder, like Clark, teaches a height adjustable computer *workstation*, but does not teach or suggest disposing enclosed compartments (e.g., drawers) in the height adjustable workstation or how it can be accomplished while maintaining stability of the cart. Reeder is generally directed to a patient monitoring cart/system. *E.g.,* Reeder, Abstract. While a large number of embodiments are provided in Reeder, only a select few are relied upon by Petitioner. *E.g.,* Petition (citing embodiments of figure 31, 45-46 of Reeder).

Exemplary figures from Reeder (annotated with color) are reproduced below for reference (showing work surface/workstation in orange and height adjustment mechanism in yellow). As illustrated, there are no enclosed compartments disposed

in the height adjustable workstation of Reeder. The workstation of Reeder (in orange) is only comprised of a work surface (e.g., for a laptop) and a computer display.

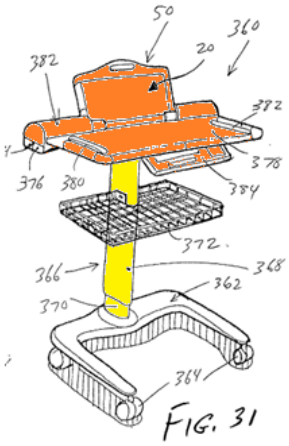

FIG. 31

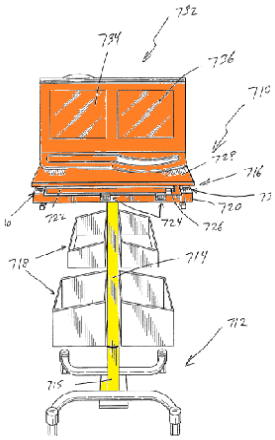

Fig. 45

These figures of Reeder, showing unenclosed wire trays and storage bins hanging off the support column significantly below the workstation demonstrates that Reeder did not envision or know how to dispose compartments in the height adjustable workstation portion of the device as claimed in the patents-at-issue.

Again, the cart of Reeder, like Clark, has a higher COG as compared to the '650 carts because it is also configured with a workstation/work surface mounted entirely on top of the height adjustment mechansim (not in a forward-projecting portion). *See* Reeder, paras. [0118], [0147]-[0148] (describing "center" vertical support member 714 with workstation 710 mounted entirely to the top of the center height adjustment mechanism). As previously discussed with respect to Clark, the '650 Applicant disclaimed carts with workstations that are mounted entirely on top

of the height adjustment mechanism arguing they are less stable due to their higher COG.

In fact, the only carts with enclosed compartments described in Reeder (embodiments of Figures 32, 33 of Reeder reproduced here) utilize the compartments as the stationary base of the cart that does not adjust up and down in height at all (the drawers in this embodiment of Reeder do not project from a height adjustment mechanism at all as required by the claims of the '650 Patent). Ex. 2010 at 142:15-143:20 (Petitioner's expert admitting this embodiment of Reeder disposes the compartments in a stationary base portion that is not height adjustable). The only component that projects forward from the height adjustment mechanism (annotated in yellow) in this embodiment of Reeder is the computer display (in orange) – not the compartments.[21] *Id*.

[21] This embodiment of Reeder merely provides height adjustability to a computer 10 by way of a telescoping arm 408, such as highlighted in the annotated version of figure 33 shown here. *E.g., Id.* at para. [0119].

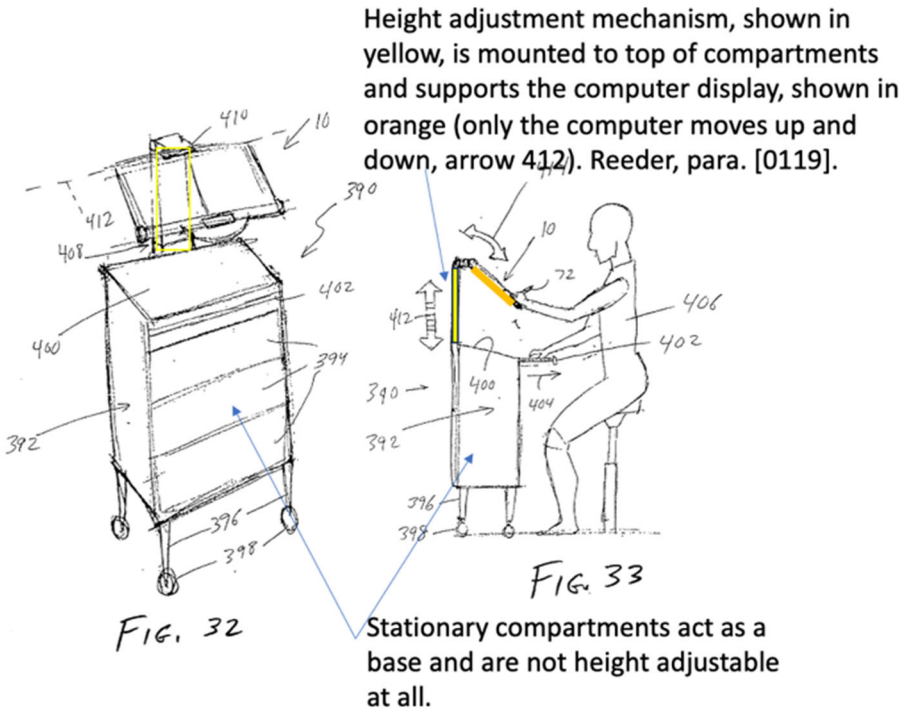

Thus, Reeder teaches the exact opposite of what the '650 and '668 patents teach and fails to solve the same problems in the art. In other words, in this embodiment, the height adjustment mechanism of Reeder is supported by the compartments and not the other way around as provided by the inventive carts of the '668 and '650 Patents. See arrow 412 in Figures 32, 33 of Reeder, Reeder at para. [0119]. In other words, the compartments of Reeder are not projecting forward from anything (instead, they serve as the base unit). Thus, the embodiments of Figures 32, 33 of Reeder do not teach or suggest the claim limitations of compartment(s) "*disposed in* the portion of the work platform projecting [relative to the height adjustment mechanism] in the forward direction". Because the only embodiment of Reeder having enclosed

compartments/drawers disposes them in a stationary base cabinet (as far from the top-mounted workstation as possible), this provides further evidence that at the time of filing of the '668 and '650 Patents at-issue, no one in the industry had incorporated enclosed compartments into a height adjustable work platform or knew how to accomplish it while maintaining a lower COG and adequate stability. Ex. 2012, ¶ 89-94.

B. None of the cited references, including Reeder, discloses compartment(s) "disposed in" a height adjustable work platform

While Patent Owner disputes that Reeder teaches any height adjustable "compartments" when properly construed (as being "enclosed"), even if the Board finds that the unenclosed wire trays and side bins are "compartments", they are not disposed in a height adjustable work platform – they merely hang off the support column far below the alleged work platform.

Reeder, like Clark, teaches a height adjustable computer workstation, but does not teach or suggest enclosed compartments (e.g., drawers) as part of the workstation or how it can be accomplished. Petitioner points to various other components of Reeder as the alleged compartments, none of which meet the requirements of the challenged claims (in embodiments of Figures 31, 45-46 of Reeder). More specifically, Petitioner's citations to the unenclosed wire storage tray 372 and/or storage containers 718 are unavailing as they fail to meet the proper definition of

"compartments" – *e.g..,* the definition agreed to by the Patent Owner and Petitioner in the on-going Litigation and the W.D.N.C. claim construction order – which requires the compartments to be enclosed.[22] '650 IPR Petition at pg. 58 (citing figure 31 of Reeder).

Additionally, these wire trays and storage bins are not "disposed in" anything, much less a height adjustable work platform as recited in the claims at-issue. Ex. 2010 at 136:11-137:6 (Petitioner's expert agreeing there are no drawers in the workstation portion 378 of Reeder).

The only brief mention in Reeder of using drawers 346, 394 is with regard to the embodiment shown in figures 30 and 32-33, none of which are height adjustable. Reeder, Figs. 30, 32, 33*, e.g.,* para. [0117]-[0119].[23] Thus, the only embodiment of Reeder disclosing enclosed compartments/drawers, dispose them in a stationary base cabinet and not in a height adjustable work platform as required by the '650 Patent claims at issue. Ex. 2012, ¶ 95-98.

---

[22] *See, supra*, section V.A. above relating to the claim construction of "compartment" providing evidence that the '650 Applicant distinguished and implicitly disclaimed unenclosed side bins and other storage containers from the meaning of "compartment".

[23] Reeder fails to make any reference to use of drawers 346, 394 with respect to the top-mounted embodiments of figures 31 or 45-46. *See id*. Notably, while beginning with a discussion of figures 30-33, Reeder expressly move away from figure 31 in its discussion regarding the drawers 344, 392. *See id*.

In view of the foregoing, Patent Owner respectfully submits that Reeder fails to teach or suggest compartment(s) disposed in a height adjustable work platform as claimed.

C. None of the cited references, including Reeder, discloses compartment(s) "disposed in the portion of the work platform projecting [relative to the height adjustment mechanism] in the forward direction"

A quick look at the figures of Reeder shows that there are no enclosed compartments/drawers disposed in the height adjustable workstation portion at all. Even assuming that Reeder teaches "compartments", none of the cited wire storage tray 372 and storage containers 718 or drawers 394 are disposed in the alleged height adjustable work platform, much less contained in a portion of an alleged work platform projecting in front of the height adjustment mechanism. Petitioner incorrectly interprets the teachings of Reeder and wrongly assumes that Reeder teaches this limitation (relying on Figures 31, 45). *See* '650 IPR Petition, pgs. 75-78, Kemnitzer, at 166-169.

Again, Petitioner takes an unreasonably broad and unsupported interpretation of the claim terms the compartment(s) are "disposed in the portion of the work platform projecting [relative to the height adjustment mechanism] in the forward direction." For example, Petitioner essentially argues that a front area (or front pocket of space) of their alleged compartment meets this limitation because it is

partially in the forward-projecting portion. *See* '650 IPR Petition, pgs. 76-77 (arguing that the front space of the wire trays and side bins of Reeder meets this limitation). In an attempt to stretch Reeder's teaching to meet the claims, Petitioner's argument essentially divides the alleged compartments into separate, fractional pockets of space/air. Again, such an interpretation is unsupported and contrary to a reasonable interpretation of the intrinsic evidence that demonstrates the '650 Applicant disclaimed embodiments where the compartments have portions disposed outside of the forward-projecting portion. *Supra* section V.B.

Inspection of the side view of the cart of Reeder illustrates that these wire trays and side bins of Reeder merely hang off the center support column and are not "disposed in" anything. Reeder at figures 31, 45-46. Additionally, the wire tray and side bins of Reeder hang off the sides and to the rear of the central support 714, and therefore are not contained in the portion of the work platform projecting in front of the height adjustment mechanism. The annotated versions of figures 31 and 45 from the Petition are reproduced below with further annotations to demonstrate this distinction. '650 IPR Petition at pgs. 76-77.

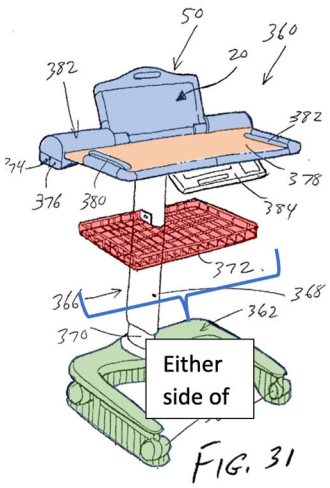

FIG. 31

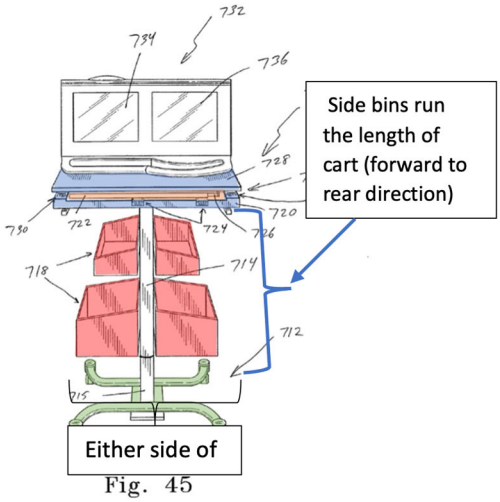

Fig. 45

This distinction is better illustrated in the perspective view of Figure 46 of Reeder. As illustrated in the annotated Figure 46 of Reeder shown here, even if the wire tray and side bins of Reeder are considered "compartments" (which they are not as they are not enclosed in anything), they hang off the side of the height adjustment mechanism (center vertical support 714) and run the entire length (forward to rear) of the cart and thus are not contained in the portion of the work platform projecting in front of the height adjustment mechanism. Thus, Reeder fails to identify the solution of the '650 Patent of containing the

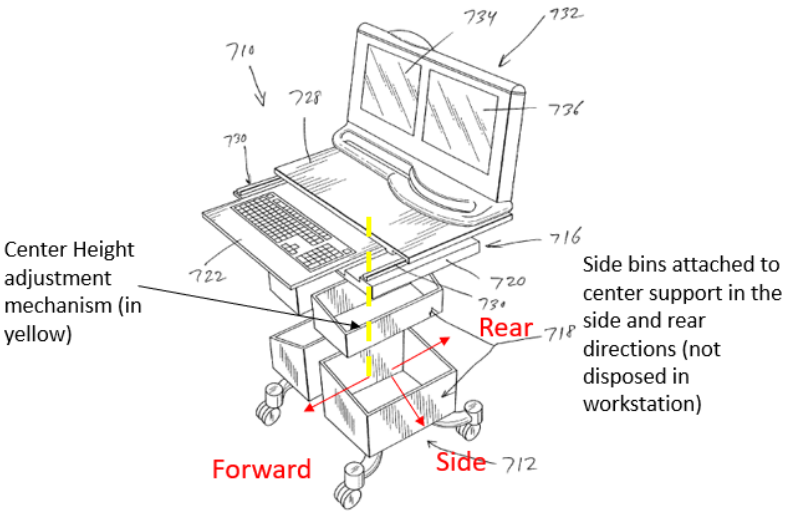

Fig. 46

compartment(s) entirely in the portion of the work platform projecting in front of the height adjustment mechanism in order to lower the COG of the cart for the purpose of increasing stability. Reeder fails to teach or suggest all of the claimed embodiments, alone or in combination. Ex. 2012, ¶ 99-102.

D. Petitioner has failed to articulate a motivation to combine/modify Reeder to reach the claimed invention

Petitioner fails to articulate any basis for why a PHOSITA would be motivated to modify the cart of Reeder to include compartment(s) "disposed in the portion of the work platform projecting [relative to the height adjustment mechanism] in the *forward direction*" as claimed. Petitioner instead mistakenly assumes that side bins and wire trays or substituted drawers[24] of Reeder meet this limitation based on an incorrect claim construction and thus Petitioner completely fails to articulate a motivation to combine or modify Reeder to reach this limitation.[25] *See* '650 IPR Petition at 75-78, Kemnitzer, 166-169. For example, Petitioner generally alleges in conclusory fashion that a PHOSITA would know to add drawers to the "bottom side

[24] Petitioner states in conclusory fashion that a PHOSITA would know to substitute drawers for the side bins or trays shown in Reeder, yet this substitution, if even successful, would also not reach the invention as any substituted drawers, like the side bins and trays, would also be disposed outside the portion of the work platform projecting in front of the height adjustment mechanism '650 IPR Petition, pg. 60.
[25] Petitioner cites to the Ellman reference for support, but Ellman does not teach height adjustable compartments at all much less *contained* in a portion of the work platform projecting in front of the height adjustment mechanism. *Id*.

of the work platform" but never opines specifically that a PHOSITA would be motivated to contain the drawers in the portion of the work platform projecting in front of the height adjustment mechanism as required by the claims at issue. *TQ Delta LLC v. Cisco Sys.*, 942 F.3d 1352, 1360 (Fed. Cir. 2019) (Petitioner must provide evidence why a PHOSITA would combine references "in the way the claimed invention does.") This failure alone amounts to a basis for denying the Petitioner's arguments as Petitioner has failed to demonstrate all the required proof for meeting a *prima facie* case of obviousness. Ex. 2012, ¶ 103.

As discussed, even though no rebuttal is necessary here as Petitioner has not met its burden, there is no motivation or reasonable expectation of success of modifying Reeder to include compartments in a forward-projecting portion of a height adjustable work platform for the same reasons provided against Clark (Grounds 1 and 2). For example, as successfully argued during the prosecution of the related '650 Patent in overcoming Clark, a PHOSITA would not be motivated to add additional, heavy components, such as storage compartments into the height adjustable workstation of Reeder (with its higher COG) as doing so would further destabilize the cart of Reeder, rendering the workstations more readily prone to toppling over. A PHOSITA would side with conventional wisdom at the time, and would keep the top-mounted workstation portion of Reeder as light and unencumbered as possible to keep the COG down in order to maintain stability.

In fact, the prior art relied upon by Petitioner would have led PHOSITA in a different direction than the claimed invention. In other words, both primary references of Clark and Reeder (and even Mr. Kemnitzer's '134 Patent) mount the workstation entirely on top of the height adjustment column without any description or detail of how to incorporate enclosed compartments into the top-mounted workstation. In fact, the only compartments disclosed in Reeder are located in a stationary base portion (as far away from the height adjustable work platform as possible). Thus, the state of the art at the time of the effective filing date of the invention, as shown by the prior art, demonstrates that nobody in the industry had gone the direction of the '650 Applicant who was the first to contain the compartment(s) entirely in the portion of the work platform projecting in front of the height adjustment mechanism. Thus, the state of the art at the time of the invention of the '650 and '668 patents would have pointed a PHOSITA in a different direction than that followed by the inventor. In other words, instead of following the prior art's lead of mounting the workstation entirely on top of the height adjustment mechanism, the '650 Applicant went a different, novel, direction. The Federal Circuit has repeatedly recognized that proceeding contrary to the accepted wisdom in the art represents "strong evidence of unobviousness." *See, e.g., In re Hedges*, 783 F.2d 1038, 1041 (Fed. Cir. 1986); *W.L. Gore & Assocs., Inc. v. Garlock, Inc.*, 721 F.2d 1540, 1552 (Fed. Cir. 1983).

As discussed above in discussing Clark, Mr. Kemnitzer's (Petitioner's expert) own '134 patent recognizes that in order to keep the portable workstation more stable, the compartments should be located at the *stationary* base portion (like Reeder) while keeping the top-mounted workstation as light and unencumbered as possible (thus keeping the COG lower). Mr. Kemnitzer also opined that from a design perspective, it is desirable to keep the COG of a portable computer workstation lower in order to increase the stability of the cart. Ex. 2010, pg. 70:15-25; 72:1-17; 75:4-76-3.

Based on the foregoing, a PHOSITA would not be motivated to modify or combine the teachings of Reeder so as to arrive at a height-adjustable work platform with compartment(s) "disposed in a portion of the work platform projecting [relative to the height adjustment mechanism] in the forward direction". The inventor of the '650 Patent was the first to solve the problem of how to incorporate compartments into a height adjustable work platform while maintaining stability of the cart by containing the compartments in the portion of the work platform projecting in front of the height adjustment mechanism resulting in cart with a lower COG when compared to top-mounted carts like Clark and Reeder. Ex. 2012, ¶ 104-107.

E. The Other Cited References of Manner, and Gillis do not Cure the Deficiencies of Reeder

For Ground 3, the Petitioner only relies on the Reeder reference as teaching the limitation of a "compartment…disposed in the portion of the work platform projecting [relative to the height adjustment mechanism] in the forward direction". Petitioner relies on the secondary references of Manner, Gillis, and Hartman for other limitations and/or other dependent claims and, therefore, these references do not cure the deficiencies of the Clark reference discussed above. Ex. 2012, ¶ 108.

VIII. Secondary Considerations of Nonobviousness

The following objective indicia of nonobviousness (factor 4 of the case of *Graham v. John Deere*) also provide further support that the claims at issue are not obvious.

A. Commercial Success and Praise

The commercial success of Capsa's patented carts (under the '668 and '650 Patents) and the praise received from customers over the years is directly related to the patented features. Specifically, customers love the fact that drawers of the patented M38 and M48 Capsa carts are height adjustable, and yet the carts have maintained their stability (e.g., certified under UL60601's strict stability requirements). Ex. 2018, Rydingsward dec., paras. 1-17 (stating that the placement of the drawers in front of the height adjustment mechanism is a major reason the carts have a lower COG, are stable, and sell so well).

B. Copying

Prior to the invention of the '668 and '650 Patents, nobody in the medical cart industry had carts with compartments contained in the portion of the work platform projecting from the height adjustment mechanism in the front direction. After Rubbermaid filed the patent applications that issued into the '668 and '650 Patents, and after Rubbermaid started commercially selling medical carts incorporating the patented features, all of the major players in the medical cart industry, including Capsa (Patent Owner), and Howard (Petitioner), and Enovate Medical, LLC (Applicant of the '061 Patent to Miller), copied the patented features and started commercially selling medical carts having compartments/drawers contained in the portion of the work platform projecting from the height adjustment mechanism in the forward direction. *Id*. at para. 18.

C. Long Felt Need and Failure of Others

As evidenced by the prior art references of Clark, Reeder, and the '134 Patent to Kemnitzer, people have been trying to figure out a better way to stabilize portable (mobile), computer workstations and carts by lowering the cart's COG. Again, each of these prior art patents, went with conventional wisdom at the time prior to the '650 and '668 Patents of placing the workstation portion entirely on top of the height adjustment mechanism while keeping it as light and unencumbered as possible.

These prior art carts were configured with weights at the base portions or expanded bases for lowering the COG, but they all failed to come up with the solution of the '650 Patent. The state of the art at the time of the effective filing date of the invention, as shown by the prior art, demonstrates that nobody in the industry had gone the direction of the '650 Applicant who was the first to contain the compartment(s) entirely in the portion of the work platform projecting in front of the height adjustment mechanism. Configuring the compartment(s) in this fashion allows the compartments to be included in the height adjustable work platform while keeping the COG lower and maintaining the needed stability of the cart. These factors provide further support that the claims at issue are not obvious. *Volvo Penta of the Ams., LLC v. Brunswick Corp.,* 81 F.4th 1202, 1213 (Fed. Cir. 2023) (the CAFC recently finding that secondary considerations of nonobviousness should be given more than merely "some weight").

IX. Conclusion

In summary, none of Petitioner's cited references teach or suggest at least one element that is found in each of the independent claims of the subject patent, namely: the compartment(s) are "disposed in the portion of the work platform projecting [relative to the height adjustment mechanism] in the forward direction" – a feature that provides the inventive cart of the '668 and '650 Patents with a lower

COG for providing more stability to support the height adjustable compartments. For these and other reasons more fully set forth herein, Petitioner fails to carry its burden of prevailing on its challenge against the claims at-issue in the '650 Patent.

Date: May 28, 2024

Respectfully submitted,

By: /Jeffrey S. Standley/

Jeffrey S. Standley, Lead Counsel
Registration No.: 34,021
jstandley@standleyllp.com
James L. Kwak
Registration No.: 41,133
jkwak@standleyllp.com
F. Michael Speed, Jr.
Registration No.: 53,627
mspeed@standleyllp.com
Adam J. Smith
Registration No.: 72,962
asmith@standleyllp.com
Standley Law Group LLP
6300 Riverside Drive
Dublin, Ohio 4307
Telephone: (614)792-5555
Facsimile: (614)792-5536

Attorneys for Patent Owner

CERTIFICATE OF COMPLIANCE

In accordance with 37 C.F.R. 42.24, the undersigned certifies that according to the Microsoft Word application used to prepare Patent Owner's Response under 37 C.F.R. § 42.120, the word count of this document, excluding portions exempt from the word count rules, is less than 14,000 words and is, in fact, 13,258 words (including footnotes).

Dated: May 28, 2024

By: /Jeffrey S. Standley/
Jeffrey S. Standley (Reg. 34,021)
An Attorney for Patent Owner

CERTIFICATE OF SERVICE

Pursuant to 37 C.F.R. § 42.6(e), the undersigned hereby certifies that the foregoing Patent Owner's Response under 37 C.F.R. § 42.120 was served via electronic mail on May 28, 2024, on the following counsel of record for Petitioner as follows:

Michael V. Young, Sr.
michael.young@finnegan.com

John M. Mulcahy
john.mulcahy@finnegan.com

Daniel M. Jordan
dan.jordan@finnegan.com

Howard-Capsa-IPRs@finnegan.com

Dated: May 28, 2024

By: /Jeffrey S. Standley/
Jeffrey S. Standley (Reg. 34,021)
An Attorney for Patent Owner