CAPSAHEALTHCARE

EXHIBIT

1043

exhibitsticker.com

SlimCart™

Assembly & Operating Manual

Elevating performance, every day.

Warnings

Severity	Hazard Meaning
	CAUTION – Indicates a hazardous situation - if not avoided, could result in minor or moderate injury
	WARNING – Indicates a hazardous situation - if not avoided, could result in death or serious injury
	DANGER – Indicates a hazardous situation - if not avoided, will result in death or serious injury

Symbol	Meaning
	IMPORTANT – Indicates a situation that does not present any hazard but is very important in maintaining a well functioning workstation
	ATTENTION – Indicates a potentially hazardous situation which may result in minor or moderate injury
	ELECTRICAL – Indicates an impending electrical hazard which, if not avoided, may result in personal injury, fire and/or death
kg	**SAFE WORKING LOAD** - Indicates the safe working load of a loaded cart
	REFER TO MANUAL - Indicates to consult the manual

Howard Exhibit 1043 - Page 2 of 32
Howard v. Capsa - IPR2023-01275

Statement of Use

SlimCart is designed and manufactured by Capsa Healthcare. Capsa Healthcare is dedicated to providing innovative quality products. Our goal is to increase the capacity to care by improving productivity, ergonomics and compliance while enhancing your facility image.

- SlimCart is a non-powered, ultralight mobile computing workstation cart designed for safe use in general patient areas for the purpose of clinical data entry and retrieval and medication delivery
- SlimCart is not intended for home use
- SlimCart has no potential electromagnetic or other interference risks when operated according to guidelines covered in this instruction manual

To ensure safety, please read this manual carefully before installation and follow the instructions herein. Store this manual in a secure place for future reference.

The manufacturer shall not be legally responsible for any equipment damage or personal injury caused by incorrect installation or operation other than that covered in this manual.

While Capsa Healthcare strives to provide complete and accurate information, it will not be held liable for any editorial errors or omissions.

Capsa Healthcare reserves the right to make changes to the documentation without advanced notice to the customer.

Specifications and product attributes are subject to change without notice.

Environmental Operating Conditions

Condition	Unit of Measure
Temperature	10°C to 40°C
Humidity	0% to 90% RH
Air Pressure	700 hPa to 1060 hPa
Altitude	3000m

Howard Exhibit 1043 - Page 3 of 32
Howard v. Capsa - IPR2023-01275

Table of Contents

Warnings **2**
Statement of Use ... 3
Environmental Operating Conditions ... 3
Introduction **5**
Overall View ... 5
Weight Capacities ... 6
Ballast Capacity Table ... 7
Cart Assembly **8**
Removing the Work Surface & Mouse Tray ... 8
Fastening the Work Surface, Column and Latch Lever ... 9
Mouse Tray Assembly ... 10
Work Surface and Base Sub-Assembly ... 12
Installing Accessories **14**
Attaching the Leg Ballasts ... 14
Attaching a Single Base Ballast ... 15
Attaching Multiple Base Ballasts ... 16
Fastening the Top Drawer ... 17
Fastening the Bottom Drawer ... 18
Mounting the Monitor Column to the Work Surface ... 19
Fastening the VESA and Tablet Mounts to the Monitor Column ... 20
Attaching the Laptop Lock Mounting Bracket ... 22
Securing a Laptop ... 23
Operation and General Use **24**
Height Adjustment ... 24
Locking the Casters ... 25
Transportation Mode **26**
Lock Drawers ... 26
Swivel Monitor to Avoid View Obstruction ... 26
Stow Cords and Wires ... 26
Cleaning **27**
Cleaning Information ... 27
Recommendations ... 27
Recommended Cleaning Solutions ... 28
Cleaning Agents and Chemicals to Avoid ... 28
Preventive Maintenance **29**
Inspection Checklist ... 29
Troubleshooting **29**
Transport, Storage & Disposal **30**
Transport ... 26
Storage ... 30
Disposal ... 30
Service **30**
Service Request ... 30
Standards Compliance **31**
Test Compliance ... 31
Product Classification ... 31

Howard Exhibit 1043 - Page 4 of 32
Howard v. Capsa - IPR2023-01275

Introduction

Overall View

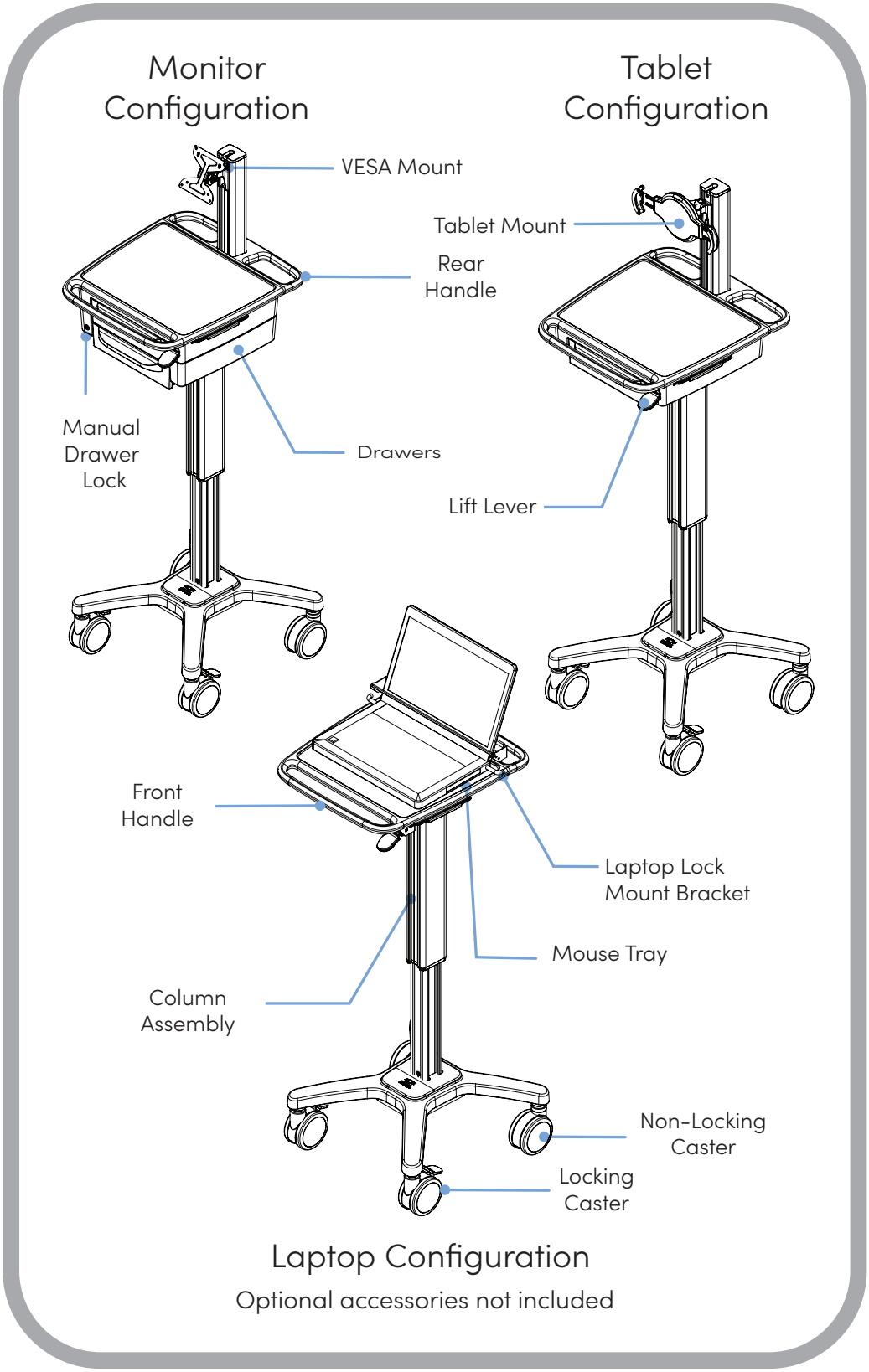

Introduction

Weight Capacities

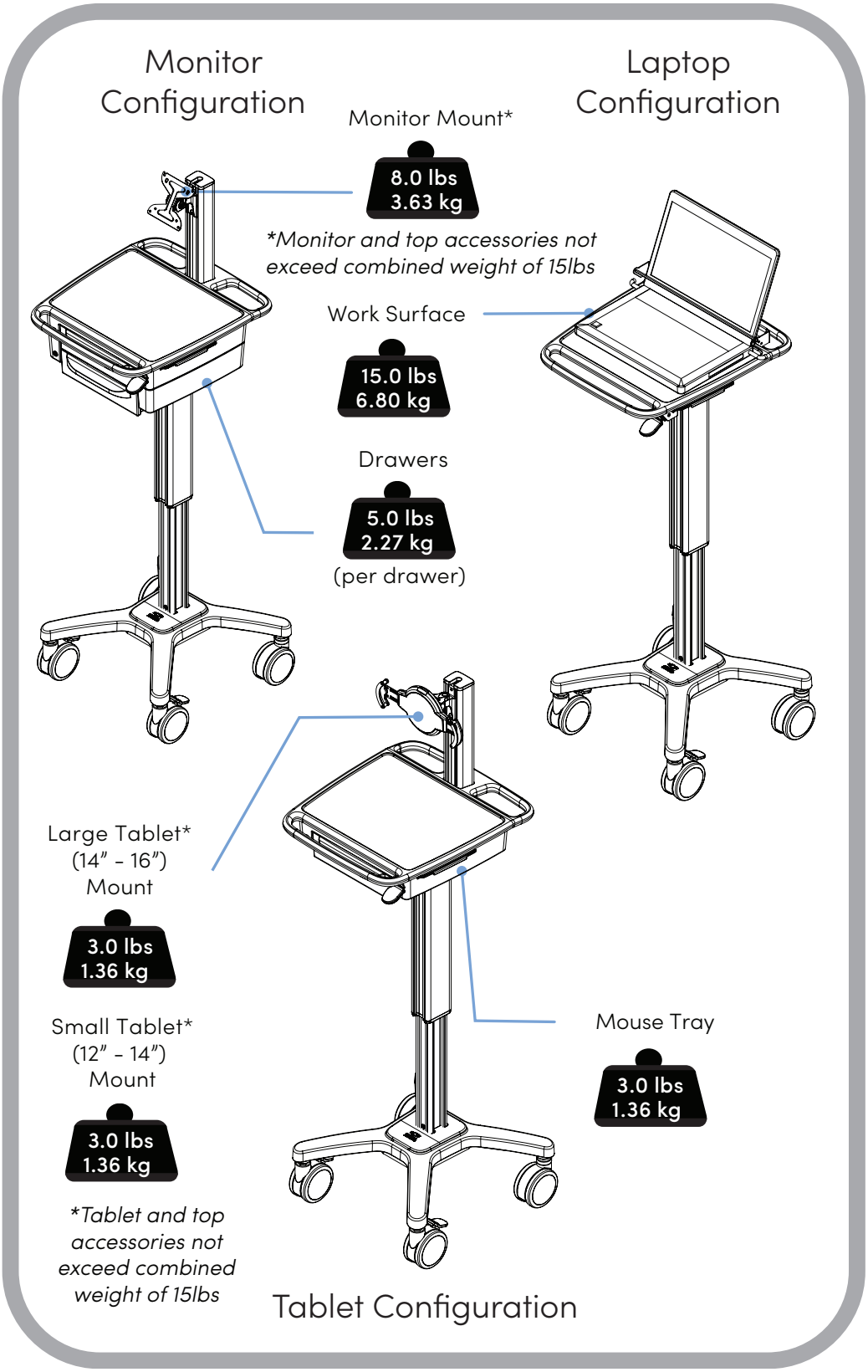

Introduction

Ballast Capacity Table

Mounting Options	# of Drawers	4 Leg Ballast	1 Base Ballast	2 Base Ballasts
Laptop	0			
	1		●	
	2			●
Monitor	0	●		
	1	●	●	
	2	●		●
Tablet	0	●		
	1	●	●	
	2	●		●

NOTE: Adding drawers and/or an LCD or tablet mount to the cart will require additional counterweights (ballasts) to prevent the cart from tipping over.

Howard Exhibit 1043 - Page 7 of 32
Howard v. Capsa - IPR2023-01275

Cart Assembly

Removing the Work Surface and the Mouse Tray

1. Remove the work surface and the mouse tray from the packaging. Set the work surface aside.

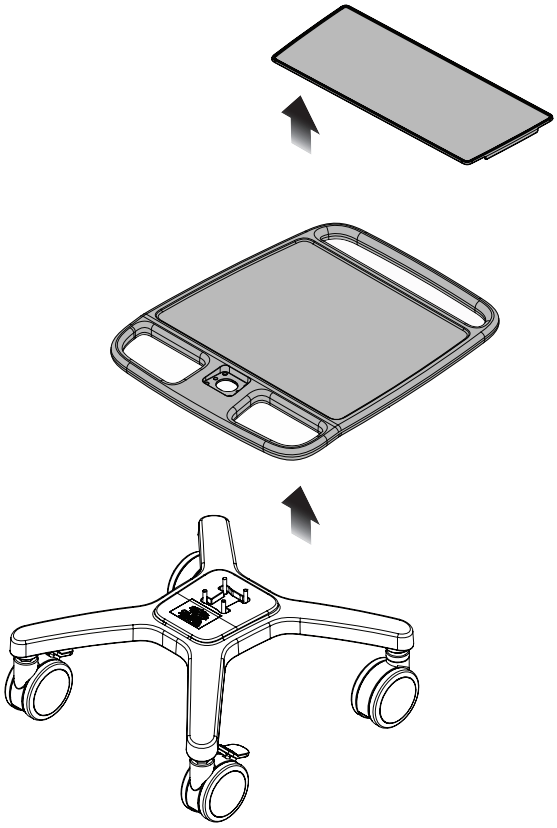

Cart Assembly

Fastening the Work Surface, Column and Latch Lever

CAUTION: IMPACT HAZARD!

DO NOT actuate the lift lever! Doing so may cause unintended riser motion which may result in injury or damage to the cart.

MISE EN GARDE: RISQUE D' IMPACT!

NE PAS actionner le levier de levage! Cela pourrait causer un déplacement accidentel de la colonne de réglage de la hauteur qui pourrait causer des blessures ou endommager le chariot.

Howard Exhibit 1043 - Page 8 of 32
Howard v. Capsa - IPR2023-01275

Cart Assembly

Fastening the Work Surface, Column and Latch Lever

CAUTION: PINCH POINT HAZARD!

Be aware of pinch points when fastening the column assembly to the underside of the work surface.

MISE EN GARDE: RISQUE DE PINCEMENT!

Tenir compte des points de pincement lors de la fixation de la colonne au dessous de la surface de travail.

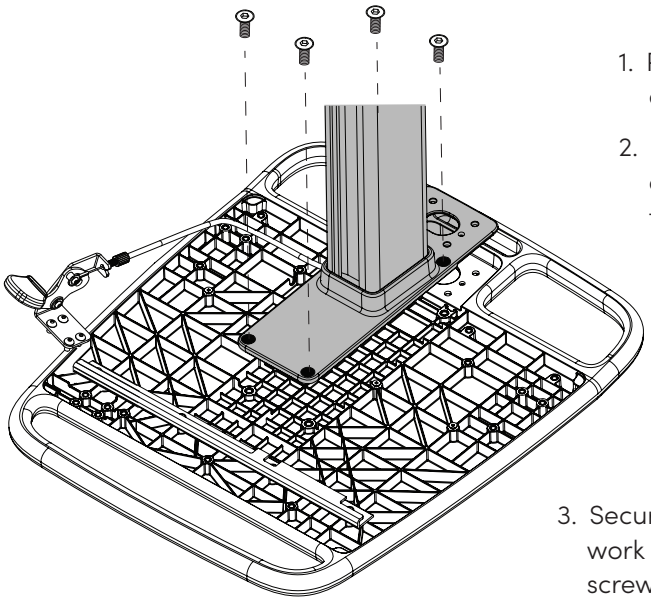

1. Place the work surface upside down on a clean flat surface.
2. Align the four holes in the column assembly plate with the four work surface holes.
3. Secure the column assembly to the work surface using four 4mm hex screws, (**Bag A**).

4. Route the cable as shown and align the four holes in the latch lever assembly plate with the 4 hole pattern on the work surface (located in the lower left hand corner of the front handle).

5. Fasten the latch lever plate to the work surface using four 4mm hex screws, (**Bag B**).

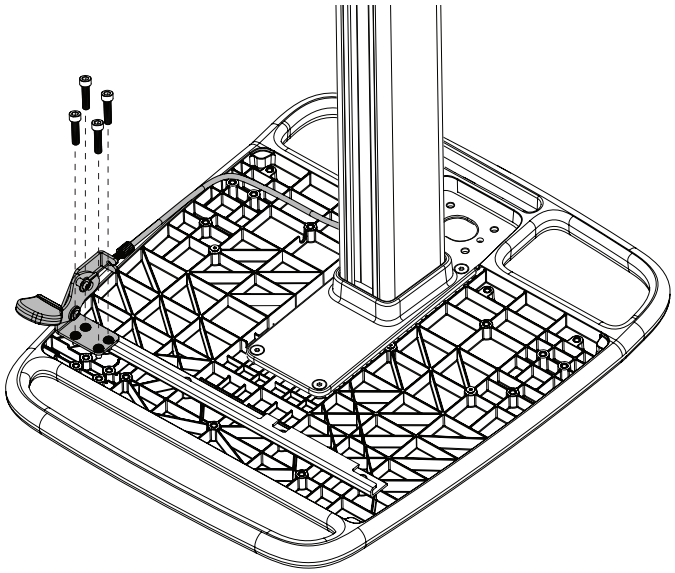

Howard Exhibit 1043 - Page 9 of 32
Howard v. Capsa - IPR2023-01275

Cart Assembly

Mouse Tray Assembly

1. Turn the mouse tray over. Slip the bracket (with the tab side facing the left) over the long edge of the mouse tray as shown.

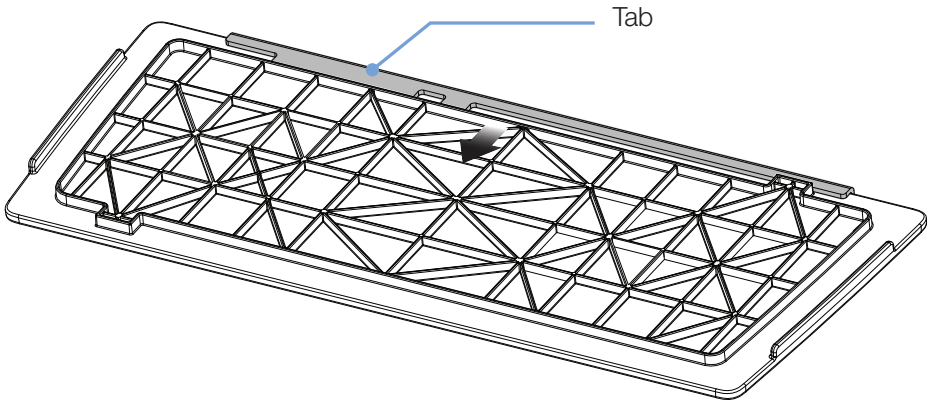

2. Holding onto the mouse tray and bracket, insert the long edge of the non bracket side of the mouse tray into the bracket already fastened to the underside of the work surface. Align the two holes in the loose bracket with the two holes on the work surface.

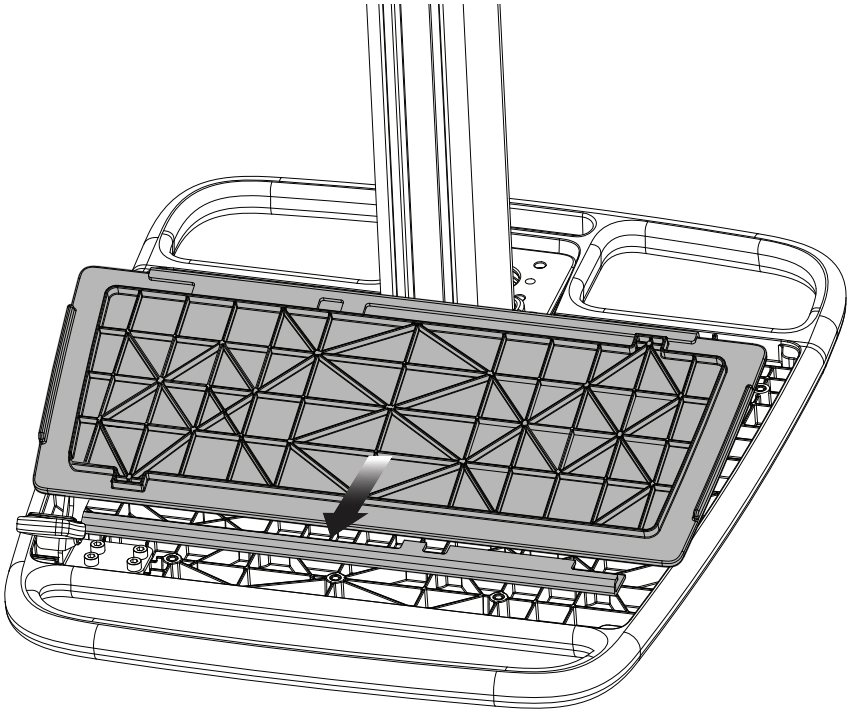

Howard Exhibit 1043 - Page 10 of 32
Howard v. Capsa - IPR2023-01275

Cart Assembly

Mouse Tray Assembly

3. Slide the mouse tray to the left enough to access the two mounting holes. Secure the bracket into place with two flat head 2.5mm hex screws, (**Bag C**).

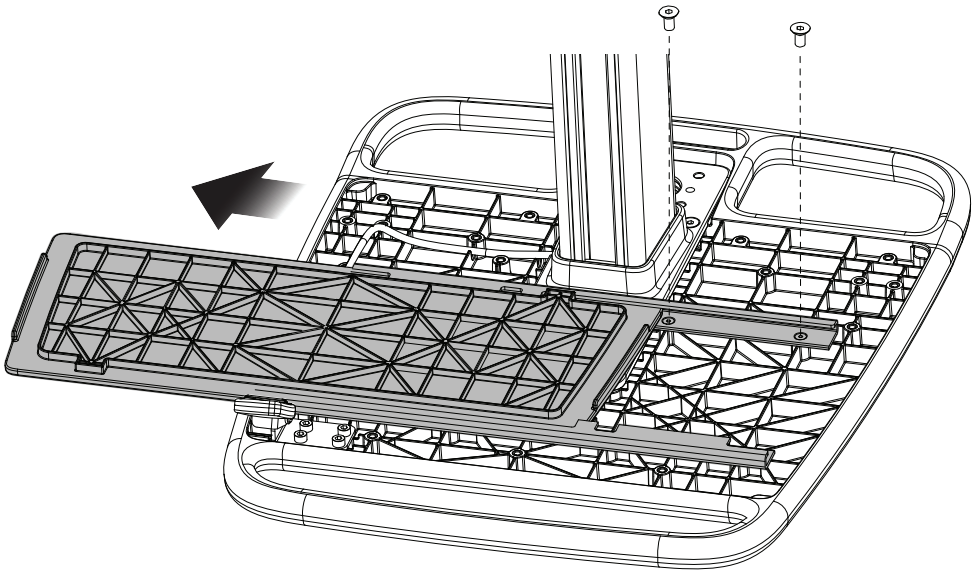

4. Slide the mouse tray to the right to access the two mounting holes. Secure the bracket into place using two flat head 2.5mm hex screws, (**Bag C**).

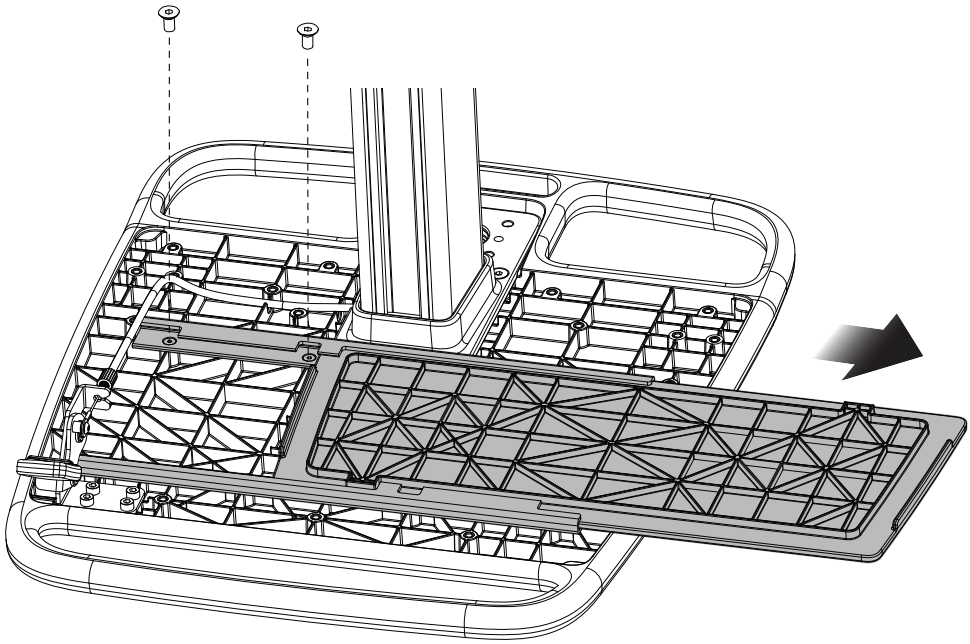

Howard Exhibit 1043 - Page 11 of 32
Howard v. Capsa - IPR2023-01275

Cart Assembly

Work Surface and Base Sub-Assembly

CAUTION: PINCH POINT HAZARD!

Be aware of pinch points while placing the base assembly onto the work surface/column assembly.

MISE EN GARDE: RISQUE DE PINCEMENT!

Tenir compte des points de pincement lors de l'installation du socle sur l'ensemble surface de travail/colonne.

CAUTION: SHARP EDGES!

The column assembly may contain burrs or sharp edges. Be mindful of this when fastening the base assembly to the column.

MISE EN GARDE: BORDS COUPANTS!

La colonne peut comporter des bavures ou des bords coupants. Faire preuve de prudence lors de la fixation du socle à la colonne.

Howard Exhibit 1043 - Page 12 of 32
Howard v. Capsa - IPR2023-01275

Cart Assembly

Work Surface and Base Sub-Assembly

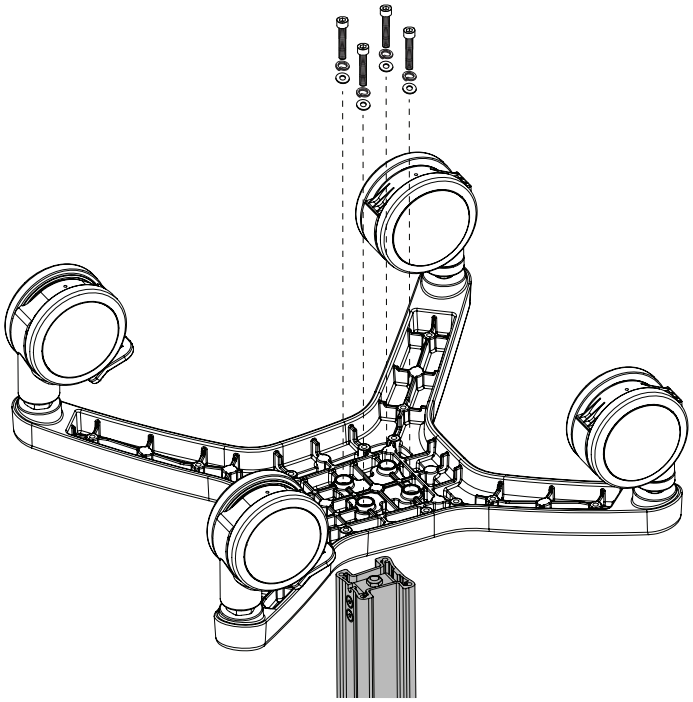

1. Place the base onto the column (caster side up). Align the 4 holes on the base with the 4 holes on the column end.
2. Secure the base to the column with the four lock washers, washers and 5mm hex bolts (in that order), (**Bag D**).

NOTE: The casters will rotate freely.

Howard Exhibit 1043 - Page 13 of 32
Howard v. Capsa - IPR2023-01275

Installing Accessories (If Applicable)

Attaching the Leg Ballasts

CAUTION: PINCH POINT HAZARD!

Be aware of pinch points between the leg ballasts and the base assembly when fastening the leg ballasts.

MISE EN GARDE: RISQUE DE PINCEMENT!

Éviter les points de pincement entre les poids des pieds et le socle lors de la fixation des poids des pieds.

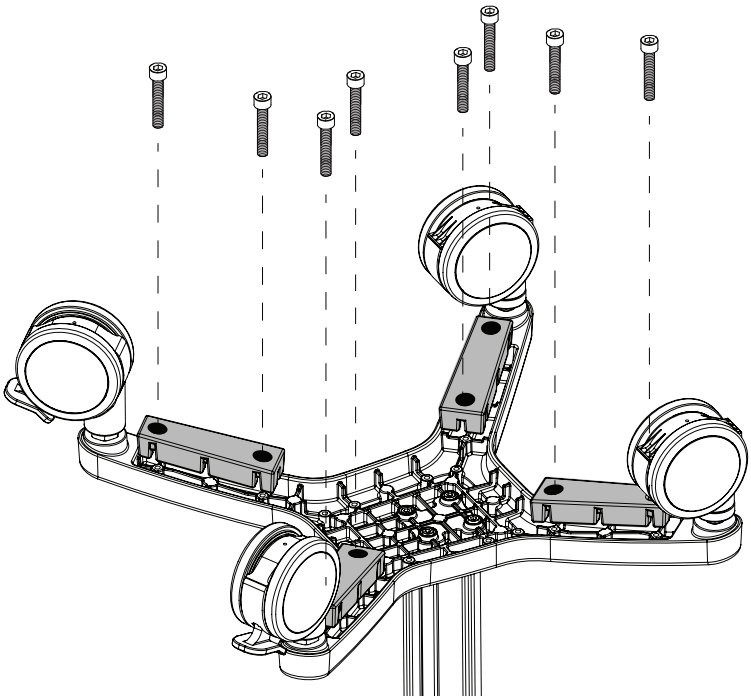

1. Insert one of the leg ballasts into one of the legs. Keep in mind they are tapered.
2. Align the holes in the ballast with the holes in the base.
3. Secure the ballast into place with two 3mm hex screws, (**Bag E**).
4. Repeat steps 1 through 3 for the three remaining ballasts.

Howard Exhibit 1043 - Page 14 of 32
Howard v. Capsa - IPR2023-01275

Installing Accessories (If Applicable)

Attaching a Single Base Ballast

CAUTION: PINCH POINT HAZARD!

Be aware of pinch points between the ballast and base when fastening the ballasts to the base assembly.

MISE EN GARDE: RISQUE DE PINCEMENT!

Éviter les points de pincement entre les poids et le socle lors de la fixation des poids sur le socle.

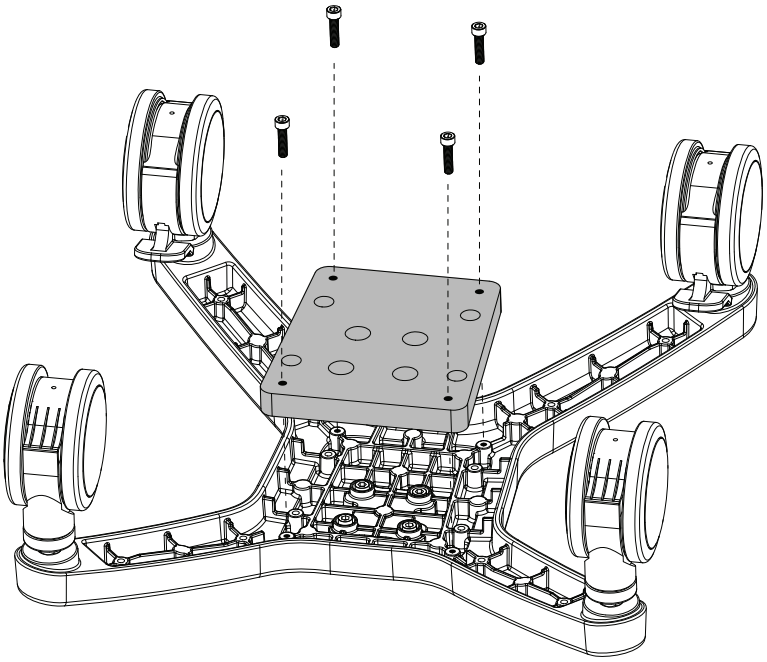

1. Insert the ballast into the center of the base assembly and align the hole patterns.
2. Secure the ballast into place using four 5mm hex screws. Use the smaller inner holes to fasten the first ballast, (**Bag F**).

Howard Exhibit 1043 - Page 15 of 32
Howard v. Capsa - IPR2023-01275

Installing Accessories (If Applicable)

Attaching Multiple Base Ballasts

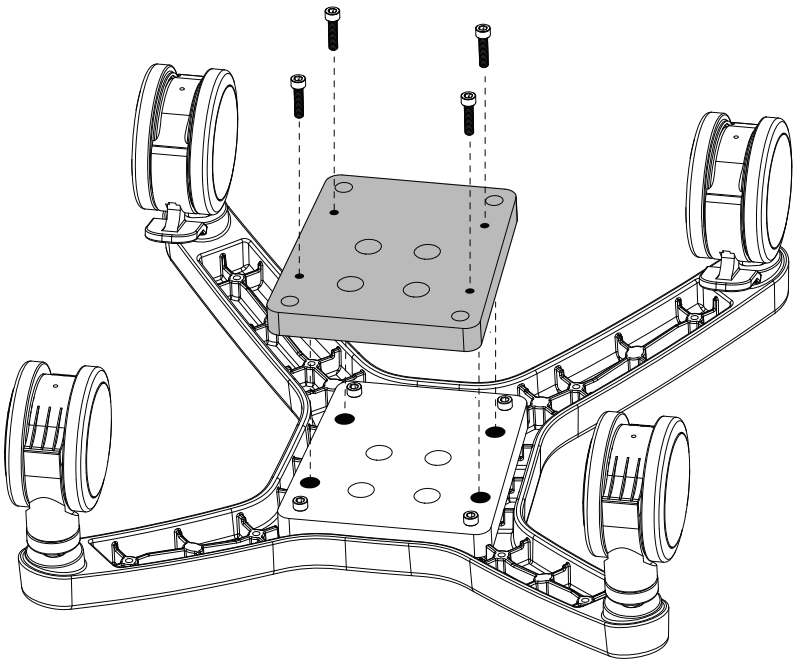

1. Align the second ballast on top of the first ballast.

2. Secure it into place using four 5mm hex screws, (**Bag G**). Use the larger outer most holes for mounting the second ballast.

Howard Exhibit 1043 - Page 16 of 32
Howard v. Capsa - IPR2023-01275

Installing Accessories (If Applicable)

Fastening the Top Drawer

CAUTION: PINCH POINT HAZARD!

Be aware of pinch points between the housing and the drawer as well as the housing and the work surface during assembly.

MISE EN GARDE: RISQUE DE PINCEMENT!

Éviter les points de pincement entre le boîtier et le tiroir et entre le boîtier et la surface de travail durant l'assemblage.

1. Remove the drawer by pushing in on the side tabs and pulling it out. Set it aside.

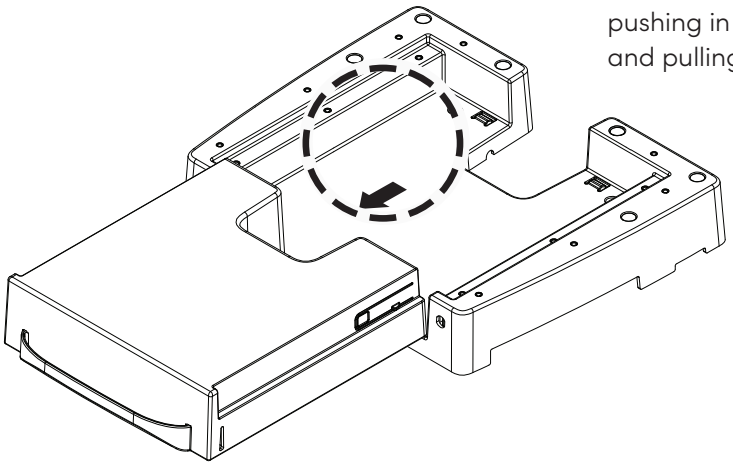

2. Place the housing onto the work surface with the cutout flush against the column. Make sure the screw holes between the housing and the work surface are aligned properly.

3. Secure the drawer housing into place using six 4mm cap head screws, (**Bag H**).

4. Slide the drawer back into place.

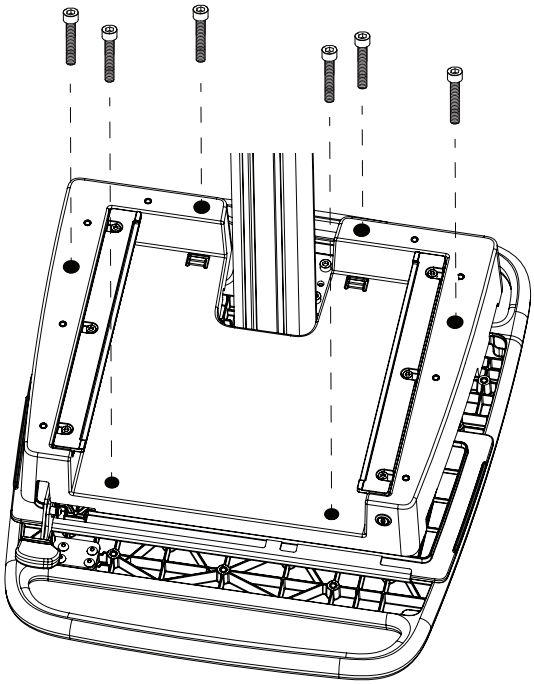

Howard Exhibit 1043 - Page 17 of 32
Howard v. Capsa - IPR2023-01275

Installing Accessories (If Applicable)

Fastening the Bottom Drawer

CAUTION: IMPACT HAZARD!

DO NOT actuate the lift lever! Doing so may cause unintended riser motion which may result in personal injury or damage to the cart.

MISE EN GARDE: RISQUE D'IMPACT!

NE PAS actionner le levier de levage! Cela pourrait causer un déplacement accidentel de la colonne de réglage de la hauteur pouvant causer des blessures ou endommager le chariot.

CAUTION: PINCH POINT HAZARD!

Be aware of pinch points between the housing and the drawer as well as the housing and the work surface during assembly.

MISE EN GARDE: RISQUE DE PINCEMENT!

Éviter les points de pincement entre le boîtier et le tiroir et entre le boîtier et la surface de travail durant l'assemblage.

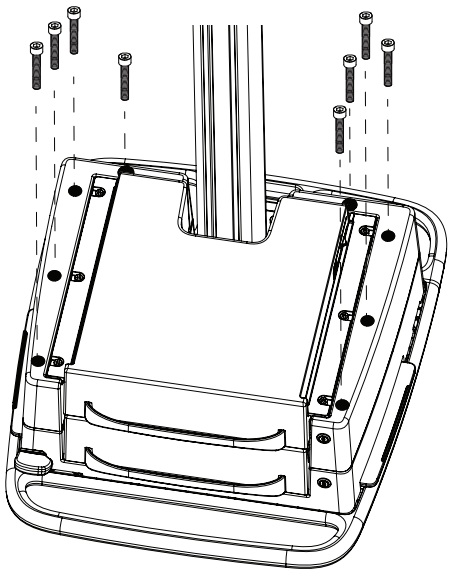

1. Remove the drawer by pushing in on the side tabs and pulling it out. Set it aside.
2. Place the housing onto the work surface with the cutout flush against the column. Make sure the screw holes between the housing and the work surface are aligned properly.
3. Secure the bottom left and right housings into place using eight 4mm cap head hex screws, (**Bag I**).
4. Slide the drawer back into place.

Howard Exhibit 1043 - Page 18 of 32
Howard v. Capsa - IPR2023-01275

Installing Accessories (If Applicable)

Mounting the Monitor Column to the Work Surface

CAUTION: PINCH POINT HAZARD!

Be aware of pinch points between the extrusion and work surface when fastening the monitor column onto the work surface.

MISE EN GARDE: RISQUE DE PINCEMENT!

Éviter les points de pincement entre le profilé et la surface de travail lors de la fixation de la colonne du moniteur sur la surface de travail.

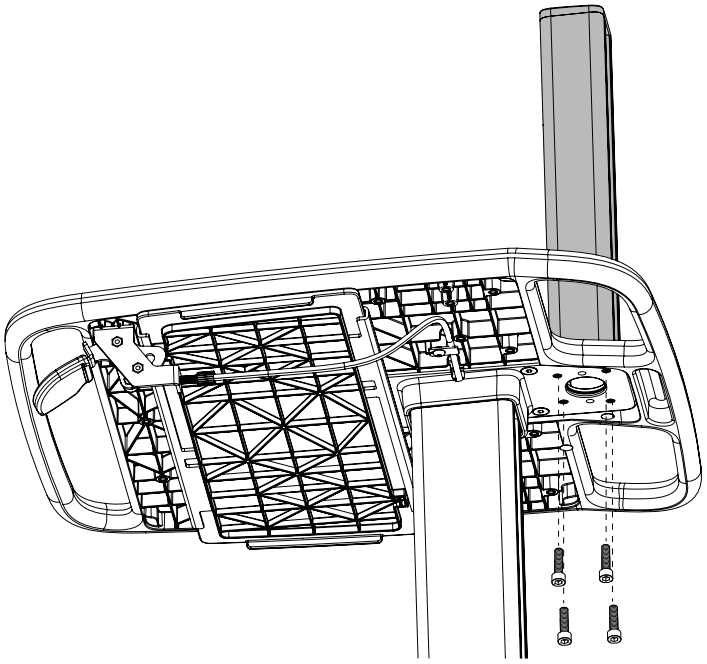

1. Place the tapered end of the monitor column into the recessed cutout between the two bin pockets at the rear of the cart.
2. Secure the monitor column into place using four 5mm hex screws (insert them from underneath as shown), (**Bag J**).

NOTE: Raise the cart so it is easier to access the underside of the work surface.

Howard Exhibit 1043 - Page 19 of 32
Howard v. Capsa - IPR2023-01275

Installing Accessories (If Applicable)

Fastening the VESA and Tablet Mounts to the Monitor Column

CAUTION: SHARP EDGES!

The extrusion may contain burrs or sharp edges. Be mindful of this when fastening the mount to the extrusion.

MISE EN GARDE: BORDS COUPANTS!

Le profilé peut comporter des bavures ou des bords coupants. Faire preuve de prudence lors de la fixation du montant sur le profilé.

CAUTION: PINCH POINT HAZARD!

Be aware of pinch points when inserting the mount assembly into the mount extrusion channel.

MISE EN GARDE: RISQUE DE PINCEMENT!

Éviter les points de pincement lors de l'insertion du montant dans le canal du profilé du montant.

1. Remove the cap from the extrusion by inserting your finger into the cap cutout and pulling up on the cap. Remove the four pre-threaded M6 x 16 cap head screws from the bottom end of the extrusion and set them aside.

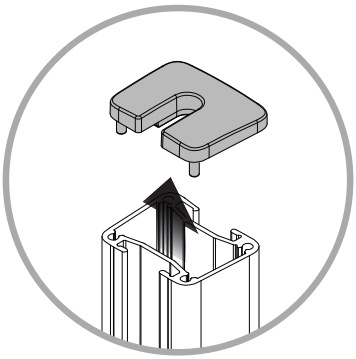

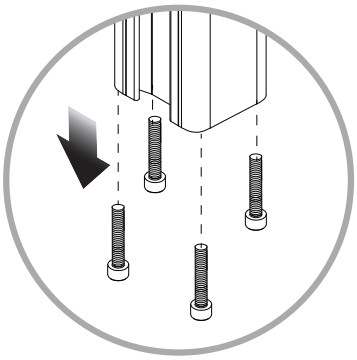

Howard Exhibit 1043 - Page 20 of 32
Howard v. Capsa - IPR2023-01275

Installing Accessories (If Applicable)

Fastening the VESA and Tablet Mounts to the Monitor Column

2. Slide the mount assembly into the center channel on the tapered (front) side of the extrusion.

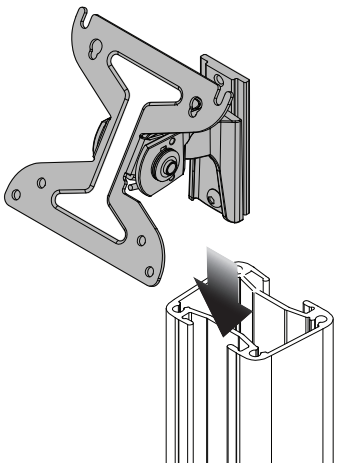

VESA Mount

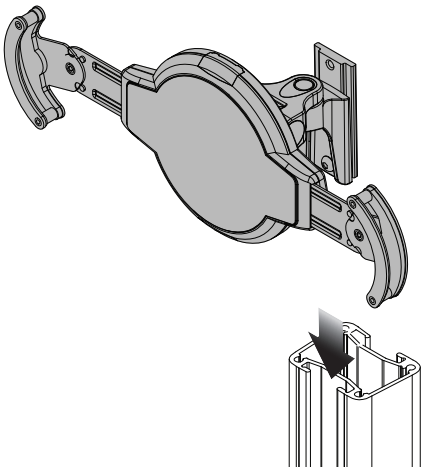

Tablet Mount

3. Secure the mount assembly to the extrusion by tightening the two 4mm hex screws on the T nut. Snap the cap back into place by pushing down on it.

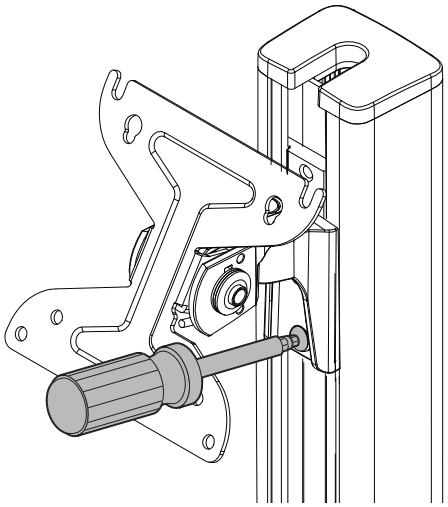

NOTE: Ensure the notch in the cap is facing towards the front of the cart.

Howard Exhibit 1043 - Page 21 of 32
Howard v. Capsa - IPR2023-01275

Installing Accessories (If Applicable)

Attaching the Laptop Lock Mounting Bracket

1. Remove the two nylon nuts from the underside of the lock assembly and set them aside.

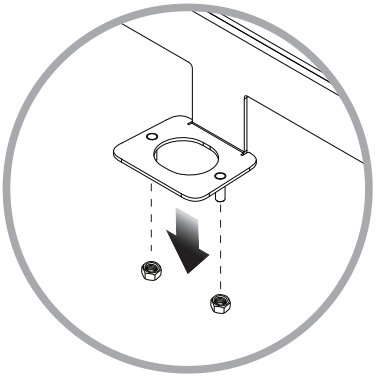

2. Insert the two bracket pem studs into the center holes located between the two bin pockets at the rear of the cart. The rod side of the bracket should be facing the front.

3. Secure the lock into place using the two nuts and a 8mm wrench.

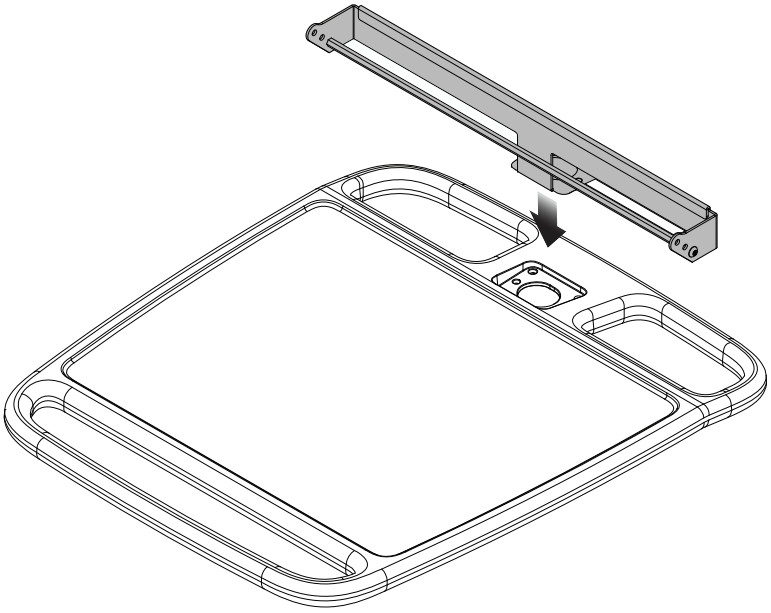

Howard Exhibit 1043 - Page 22 of 32
Howard v. Capsa - IPR2023-01275

Operation and General Use

Securing a Laptop

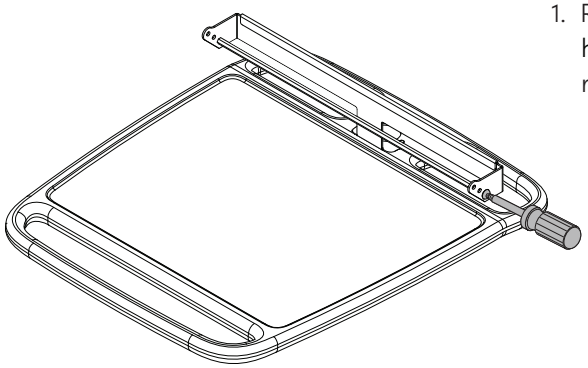

1. Remove the two tamper resistant hex screws from the ends of the rod.

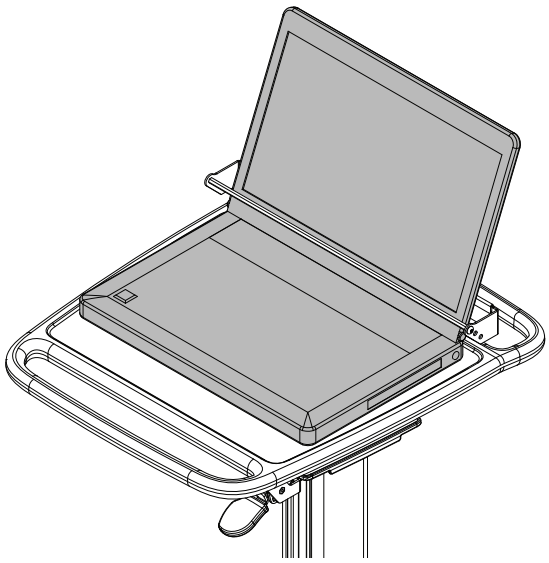

2. Position the open laptop at the rear of the work surface.
3. Re-fasten the rod in front of the screen using the two tamper proof hex screws.

Height Adjustment

WARNING: DO NOT LEAN ON DRAWERS!

DO NOT lean or pull on open drawers or use them as a support! The drawers are not designed to handle this type of load!

DO NOT overload. cart!

AVERTISSEMENT: NE PAS S'APPUYER SUR LES TIROIRS!

NE PAS s'appuyer ou tirer sur les tiroirs ouverts ni ne les utiliser comme un support! Les tiroirs ne sont pas conçus pour supporter ce type de charge!

Howard Exhibit 1043 - Page 23 of 32
Howard v. Capsa - IPR2023-01275

Operation and General Use

Height Adjustment

CAUTION: PINCH POINT HAZARD!

Be aware of pinch points between the base and column when lowering the work surface!

MISE EN GARDE: RISQUE DE PINCEMENT!

Éviter les points de pincement entre le socle et la colonne lors de l'abaissement de la surface de travail!

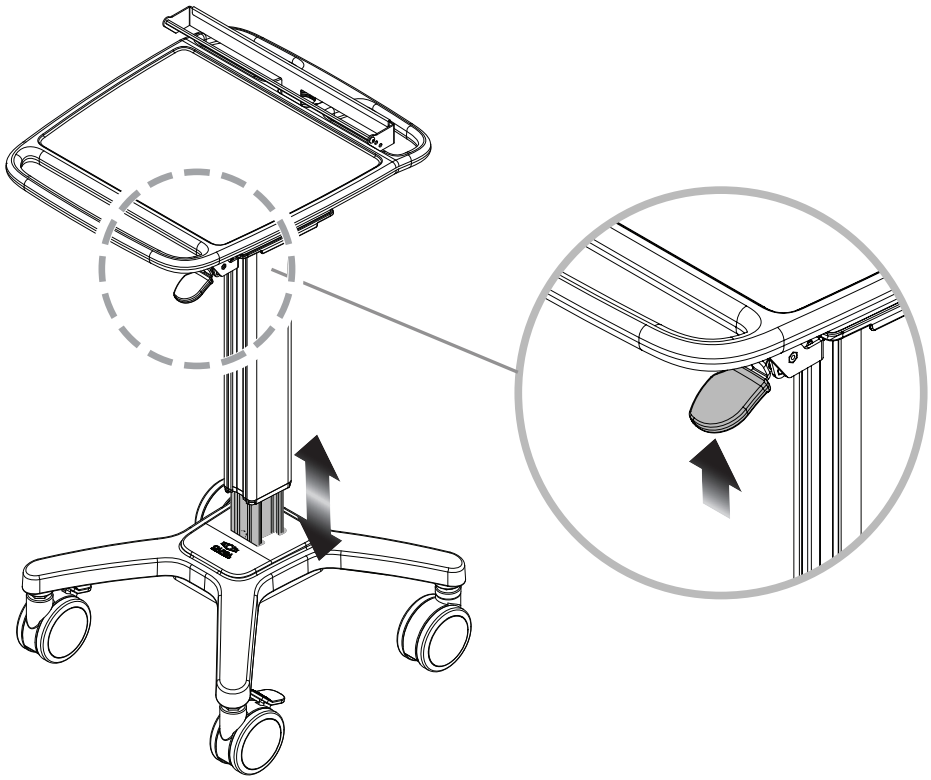

1. Hold the work surface steady and lift up on the lever.
2. Raise or lower the work surface to the desired height, then release the lever.

NOTE: Only open one drawer at a time! Cart is not designed to handle multiple drawers open simultaneously!

Howard Exhibit 1043 - Page 24 of 32
Howard v. Capsa - IPR2023-01275

Operation and General Use

Locking the Casters

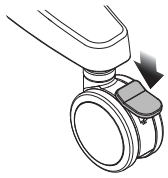

CAUTION: LOCK CASTERS ON INCLINES!

Lock casters on inclines! Failure to do so may result in personal injury and/or damage to the cart!

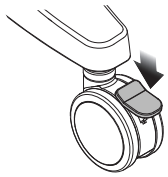

MISE EN GARDE: VERROUILLER LES ROULETTES SUR LES PENTES!

Verrouiller les roulettes sur les pentes! Le non-respect de cette mise en garde pourrait causer des blessures ou endommager le chariot!

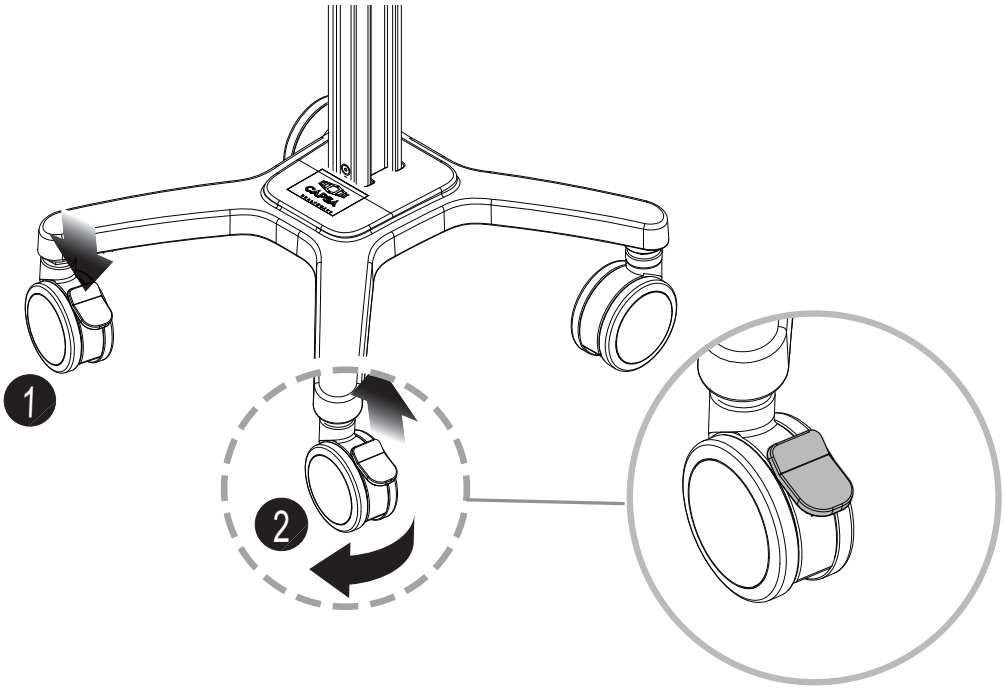

1. Press down on the tab to lock the caster.
2. Lift up on the tab to unlock the caster.

Howard Exhibit 1043 - Page 25 of 32
Howard v. Capsa - IPR2023-01275

Transportation Mode

Lock Drawers

Lock the drawers prior to moving the cart to prevent potential injury or damage to the cart.

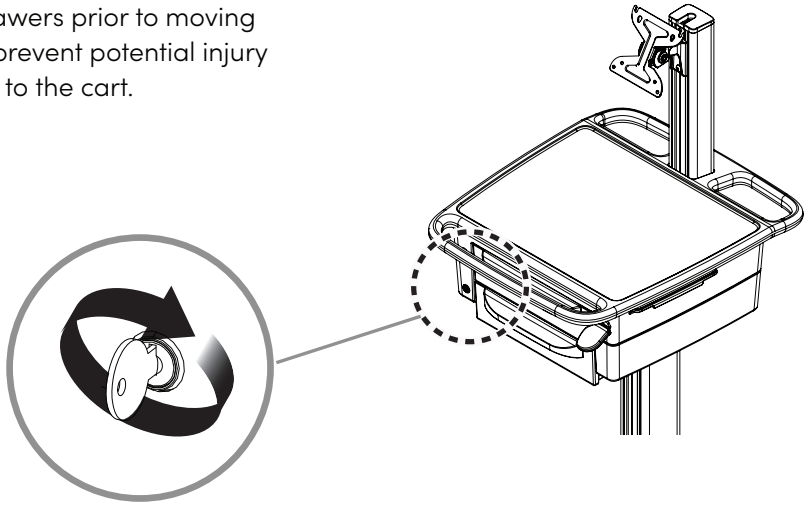

Swivel Monitor to Avoid View Obstruction

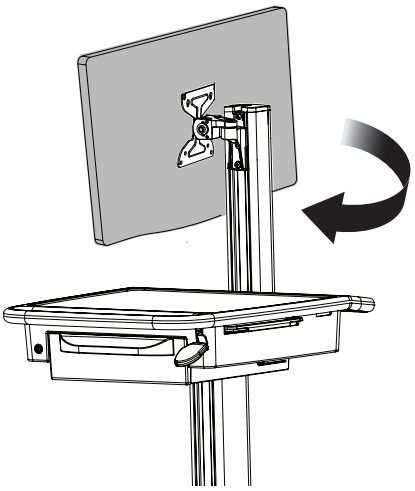

Rotate the monitor prior to moving the cart to avoid view obstruction and potential injury or damage to the cart!

Stow all Cords and Wires

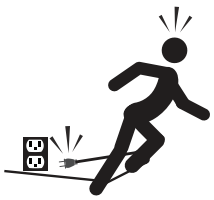

Ensure all cords and wires are properly stowed at all times to avoid potential tripping hazards!

Howard Exhibit 1043 - Page 26 of 32
Howard v. Capsa - IPR2023-01275

Cleaning

Cleaning Information

Clean Capsa Healthcare products regularly according to infection control guidelines and protocols. Capsa Healthcare products are designed to be chemical and spill-resistant and easy to clean. Components are manufactured from the highest grade, non-porous, chemical resistant ABS (acrylonitrile, butadiene and styrene) plastic, and from smooth, chemical resistant powder-coated steel and aluminum. Although high-touch components (work surface, handles, wrist rest) on certain Capsa Healthcare products incorporate anti-microbial additives, it is not recommended to rely solely on those additives for infection control and proper hygiene.

Most common disinfectant wipes and diluted cleaning solutions that are safe to use in patient care environments are also acceptable to use for cleaning Capsa Healthcare products' exterior surfaces.

Recommendations

- Wear the required PPE (Personal Protective Equipment)
- Understand the precautionary statements
- Follow the directions for use, including pre-cleaning instructions
- Follow the contact guidelines
- Refer to the SDS (Safety Data Sheet) as necessary
- Consult your Infection Control Administrator for cleaning procedures and processes
- Clean plastic components with diluted, non-abrasive solutions
- Remove pen and dry erase marker stains with a soft cloth and 91% isopropyl alcohol
- Remove iodine stains with a soft cloth and any of the suggested cleaners
- Allow your cart to dry completely before plugging the power cord into a wall outlet
- When cleaning the cart, wipe off the surface with a damp cloth and thoroughly dry
- Avoid excess dampness and never immerse the cart or its components in liquid or allow liquids to flow into the cart
- Never use steel wool or other abrasive materials as these could damage the surface finish
- Before using any cleaner on the cart, first test it on a small area to ensure that the surface is not harmed
- Rear bins can be removed by grabbing the outside edge of the bin and lifting up

Howard Exhibit 1043 - Page 27 of 32
Howard v. Capsa - IPR2023-01275

Cleaning

Recommended Cleaning Solutions

Quaternary Ammonium	Bleach-Based	Peroxide-Based	Alcohol-Based
• Metrex™ CaviWipes™ • Metrex™ CaviCide™ • PDI® Sani-Cloth® AF/Plus • PDI® Super Sani-Cloth® • EnVerros SaniMaster 4® • Virex® 256 • DisCide® • Safetec® SaniZide Disposable Wipe Products • Envirocide®	• Bleach dilution (10%) • Clorox® Dispatch®	• Hydrogen Peroxide • Virox® 5 • Steriplex SD® • Accel® TB	• Isopropyl Alcohol • Simple Green®

Cleaning Agents and Chemicals to Avoid

- Non-Diluted Bleach or Chemicals
- Acetone
- Mineral Spirits
- Abrasive Cleaners
- Baking Soda
- Paint Thinners/Solvents
- Any Flammable or Toxic Chemicals

Howard Exhibit 1043 - Page 28 of 32
Howard v. Capsa - IPR2023-01275

Preventative Maintenance

Inspection Checklist

To protect optimal performance, Capsa Healthcare recommends a periodic inspection and preventative maintenance of your computing cart fleet. These simple steps can safeguard against breakdowns and help you realize uninterrupted workflow and cart availability.

Items	Action	Benefit
Device Cables	Inspect wires and components for any damage; ensure there are no loose connectors.	Identifies potential safety issues, optimizes workstation runtime.
Casters	Check casters for proper tightness, ensure casters are free of dirt and grime and operate smoothly.	Mitigates risk of injury due to loose casters. Ensures proper maneuverability of workstation.
Inspect Hardware	Check for loose or broken hardware, drawers	Prevents unexpected power failure; mitigates chance for interrupted workflow and clinical processes.
Inspect Work Surface area	Inspect work surface for cleanness and damage.	Promotes proper infection control practices and maintains function
Inspect Height Adjustment	Check height adjustment for proper function, including full range of motion. The column and gas spring contain no user serviceable parts inside and should **NOT** be disassembled.	Facilitates simple height and ergonomic adjustments; ensures comfortable use by clinical staff.
Inspect all Bins, Drawers and Locks	Check functionality of bins and drawers including locking function.	Smooth operation of bins and drawers provides secure, organized storage.
Inspect Mounted Accessories	Check for secure fit to mount area and tighten if necessary.	Ensure stable accommodation of peripheral device holders and other accessories and supplies.

Troubleshooting

Problem	Solution
Cart Is Hard To Push	Verify the caster locks are in the unlocked (up) position.
	Examine the casters for any foreign debris.
Will Not Raise or Lower	Inspect for cable obstructions.

Howard Exhibit 1043 - Page 29 of 32
Howard v. Capsa - IPR2023-01275

Transport, Storage & Disposal

Transport

The shipping weight of the SlimCart is approximately 33 - 66 lbs (15 - 30 kg). Use lifting aids and proper lifting techniques to avoid muscle strain or back injury.

Storage

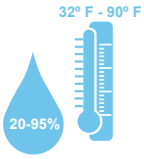

Care should be taken to transport and store this system within a temperature range of 32º F to 90º F (0º C to 32º C); humidity 20% RH to 95% RH non-condensing.

Disposal

Cart Disposal
Dispose of this cart according to local guidelines and regulations for disposal of equipment (and accessories). For more information contact Capsa Healthcare Customer Service at: 1-800-437-6633.

Service

Service Request

Capsa Healthcare is committed to providing best-in class service. Our service department consists of technicians qualified to conduct all service repairs and has access to all component parts lists and descriptions. Please contact them directly for all service repairs by submitting a service request.

To make a service request, contact our service department at:

Web Request

www.capsahealthcare.com/request-service

Email

parts.support@capsahealthcare.com
8:00 a.m. to 8:00 p.m. EST Monday through Friday

Phone

800.437.6633

Standards Compliance

Test Compliance

- ANSI/AAMI ES60601-1:2005 + A2:2010 + A1:2012 Medical Electrical Equipment - Part 1: General Requirements for Basic Safety and Essential Performance
- CAN/CSA-C22.2 No. 60601-1:2014
  Standard for Safety Medical Electrical Equipment, Part 1: General Requirements for Basic Safety and Essential Performance

Product Classification

- Class 1/ Internally powered device with no applied parts
- This equipment is designed for continuous operation
- Class A, Group 1 ISM Equipment
- This device is classified IPXO for water ingress

Howard Exhibit 1043 - Page 31 of 32
Howard v. Capsa - IPR2023-01275

800.437.6633
www.CapsaHealthcare.com

07/2019 Part # 810306 SlimCart Assembly & Operating Manual Rev D
© 2019 Capsa Healthcare
Portland, OR 97230