US 20100088100A1

(19) United States

(12) Patent Application Publication

Lindahl

(10) Pub. No.: US 2010/0088100 A1

(43) Pub. Date: Apr. 8, 2010

(54) ELECTRONIC DEVICES WITH VOICE COMMAND AND CONTEXTUAL DATA PROCESSING CAPABILITIES

(76) Inventor: **Aram M. Lindahl**, Menlo Park, CA (US)

Correspondence Address:
Treyz Law Group
870 Market Street, Suite 984
SAN FRANCISCO, CA 94102 (US)

(21) Appl. No.: **12/244,713**

(22) Filed: **Oct. 2, 2008**

Publication Classification

(51) **Int. Cl.**
G10L 11/00 (2006.01)
G10L 21/00 (2006.01)
G10L 15/00 (2006.01)

(52) **U.S. Cl.** **704/270.1**; 704/275; 704/E15.044; 704/E15.04

(57) **ABSTRACT**

An electronic device may capture a voice command from a user. The electronic device may store contextual information about the state of the electronic device when the voice command is received. The electronic device may transmit the voice command and the contextual information to computing equipment such as a desktop computer or a remote server. The computing equipment may perform a speech recognition operation on the voice command and may process the contextual information. The computing equipment may respond to the voice command. The computing equipment may also transmit information to the electronic device that allows the electronic device to respond to the voice command.

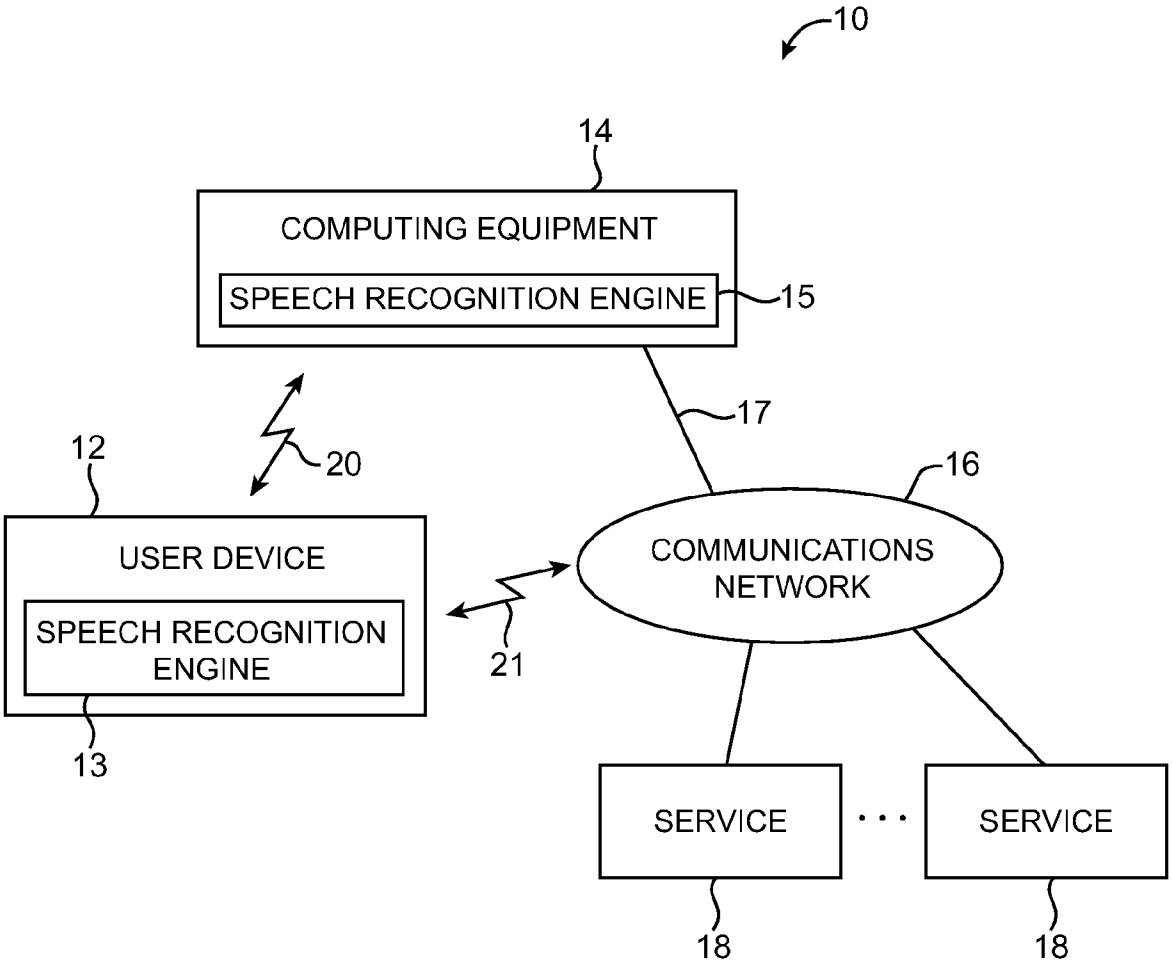

SONOS EXHIBIT 1011

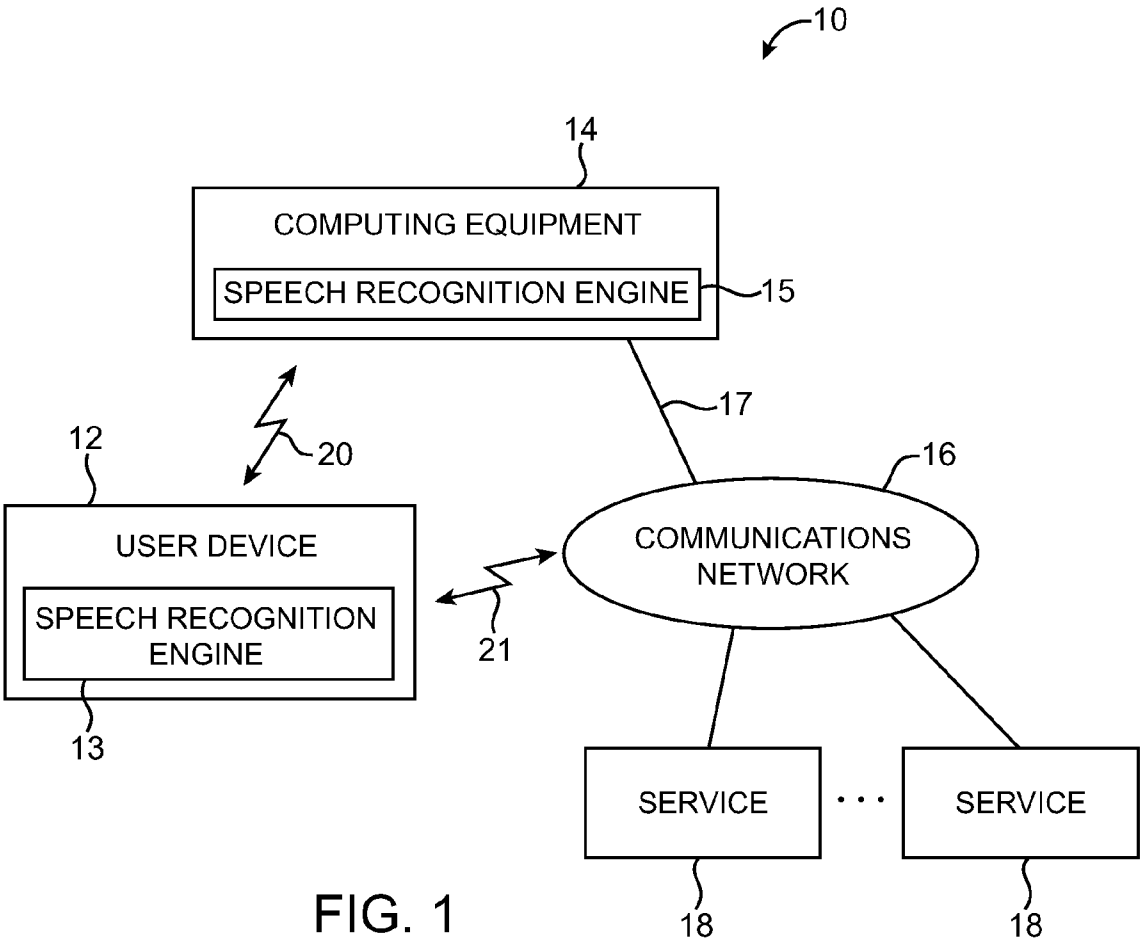
10
14
COMPUTING EQUIPMENT
SPEECH RECOGNITION ENGINE
15
17
12
20
16
USER DEVICE
SPEECH RECOGNITION ENGINE
COMMUNICATIONS NETWORK
21
13
SERVICE
SERVICE
18
18

FIG. 1

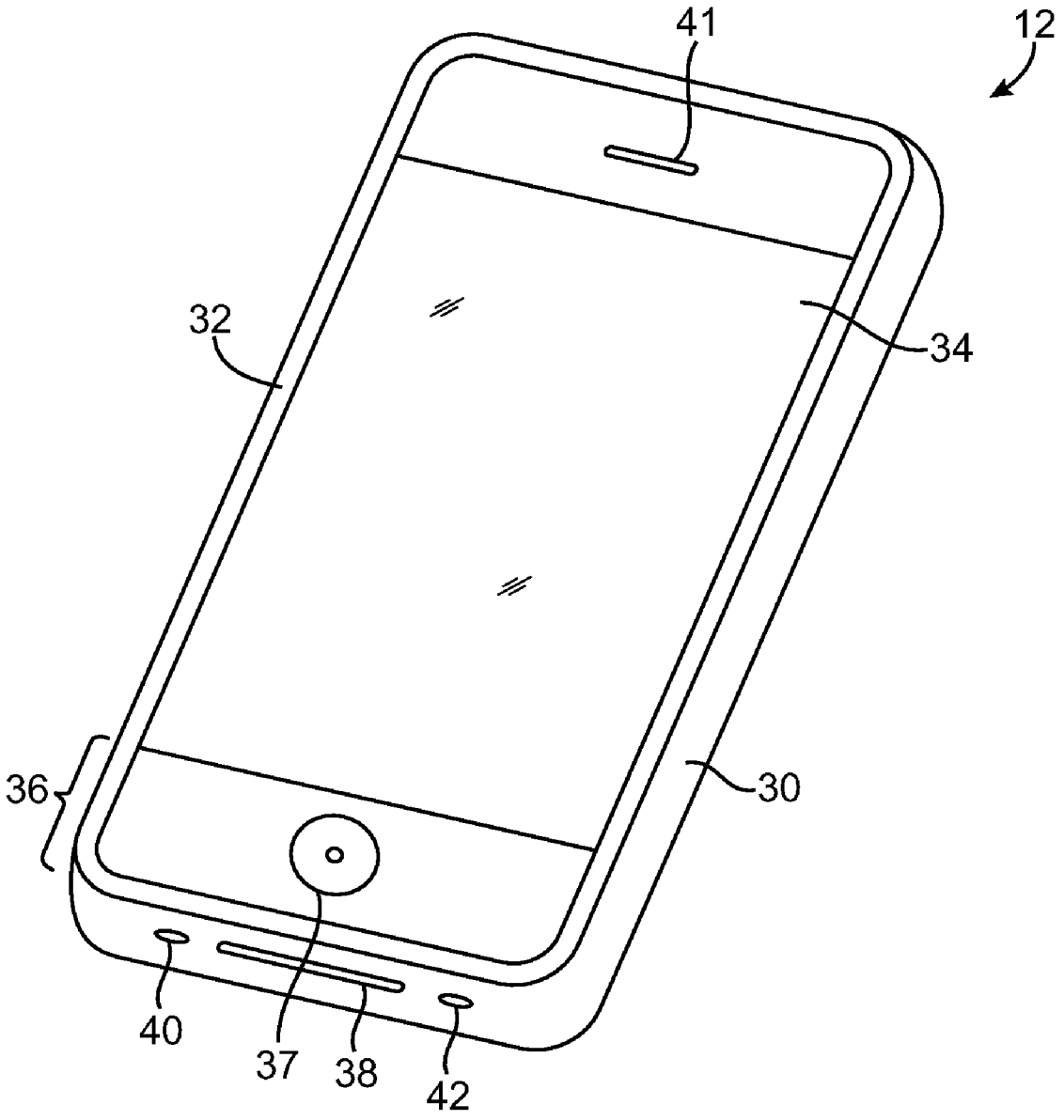

FIG. 2

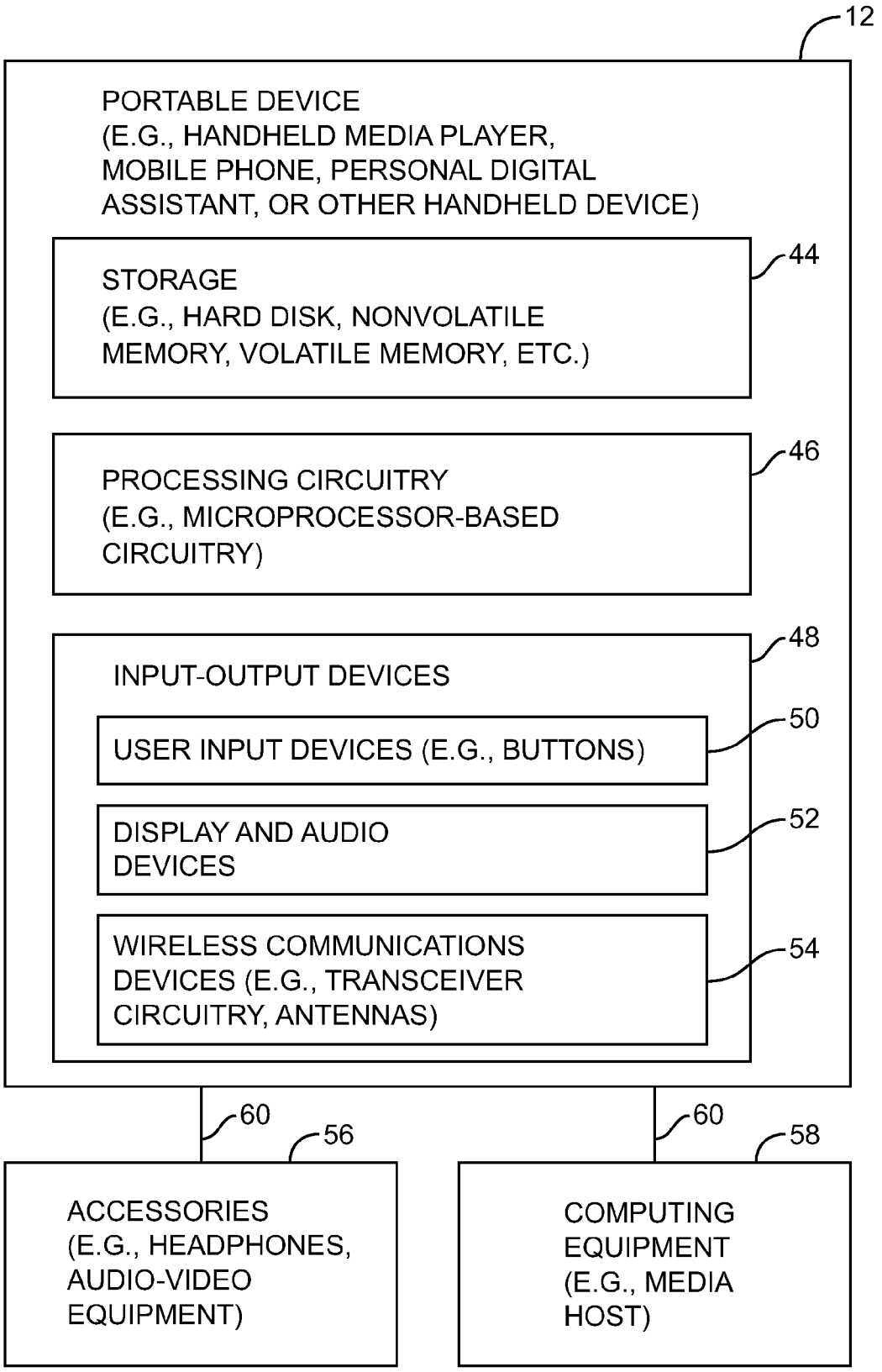
12
PORTABLE DEVICE
(E.G., HANDHELD MEDIA PLAYER,
MOBILE PHONE, PERSONAL DIGITAL
ASSISTANT, OR OTHER HANDHELD DEVICE)
STORAGE
(E.G., HARD DISK, NONVOLATILE
MEMORY, VOLATILE MEMORY, ETC.)
44
PROCESSING CIRCUITRY
(E.G., MICROPROCESSOR-BASED
CIRCUITRY)
46
INPUT-OUTPUT DEVICES
48
USER INPUT DEVICES (E.G., BUTTONS)
50
DISPLAY AND AUDIO
DEVICES
52
WIRELESS COMMUNICATIONS
DEVICES (E.G., TRANSCEIVER
CIRCUITRY, ANTENNAS)
54
60
56
60
58
ACCESSORIES
(E.G., HEADPHONES,
AUDIO-VIDEO
EQUIPMENT)
COMPUTING
EQUIPMENT
(E.G., MEDIA
HOST)

FIG. 3

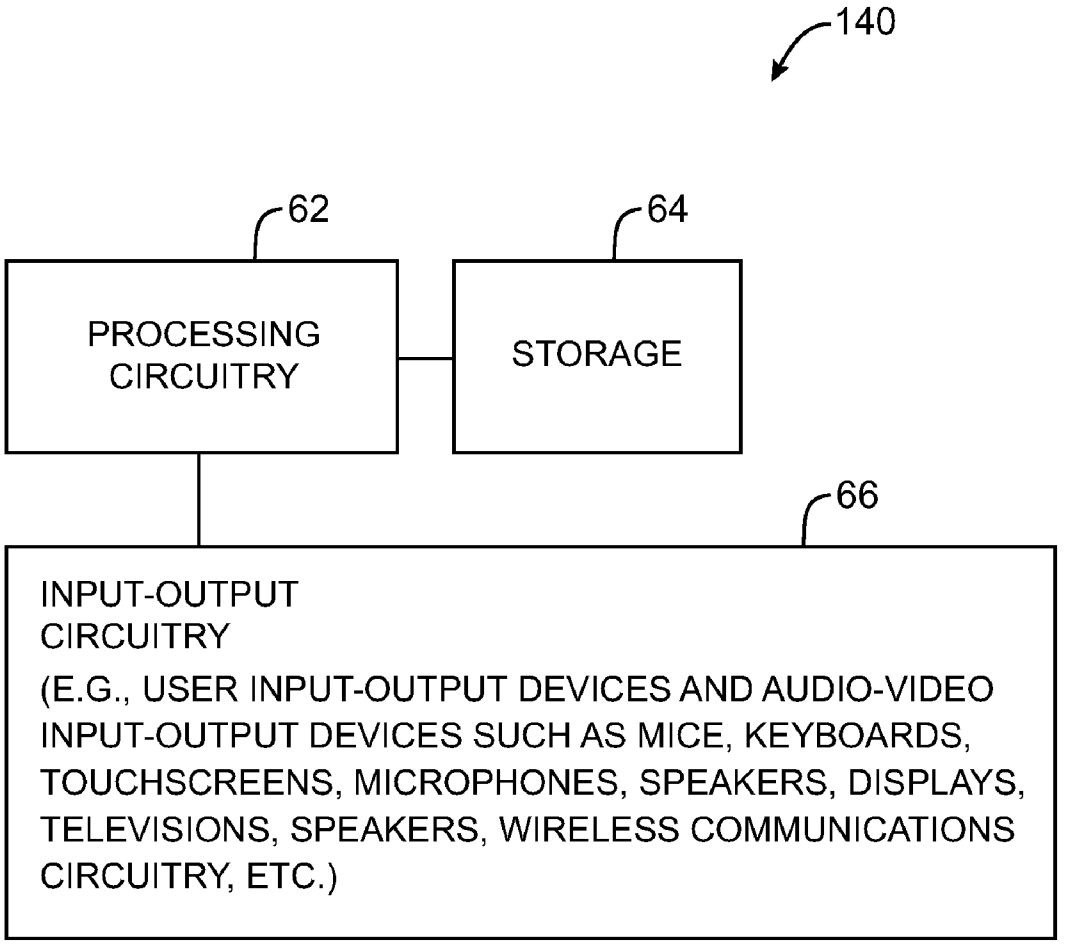
140
62
64
PROCESSING CIRCUITRY
STORAGE
66
INPUT-OUTPUT CIRCUITRY
(E.G., USER INPUT-OUTPUT DEVICES AND AUDIO-VIDEO INPUT-OUTPUT DEVICES SUCH AS MICE, KEYBOARDS, TOUCHSCREENS, MICROPHONES, SPEAKERS, DISPLAYS, TELEVISIONS, SPEAKERS, WIRELESS COMMUNICATIONS CIRCUITRY, ETC.)

FIG. 4

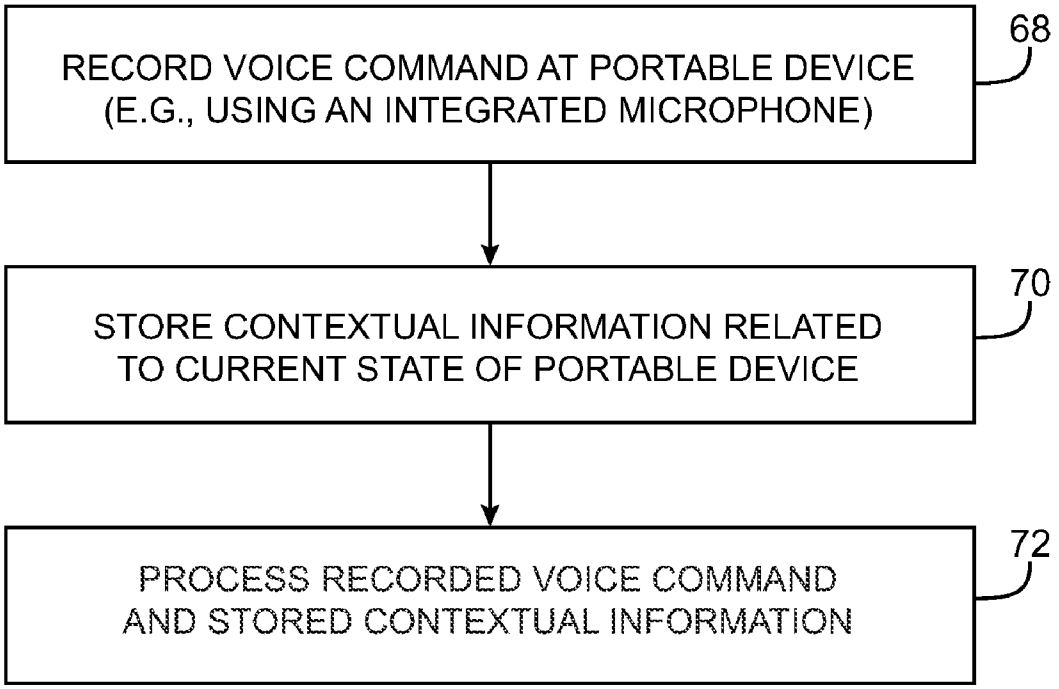
RECORD VOICE COMMAND AT PORTABLE DEVICE (E.G., USING AN INTEGRATED MICROPHONE)
68
STORE CONTEXTUAL INFORMATION RELATED TO CURRENT STATE OF PORTABLE DEVICE
70
PROCESS RECORDED VOICE COMMAND AND STORED CONTEXTUAL INFORMATION
72

FIG. 5

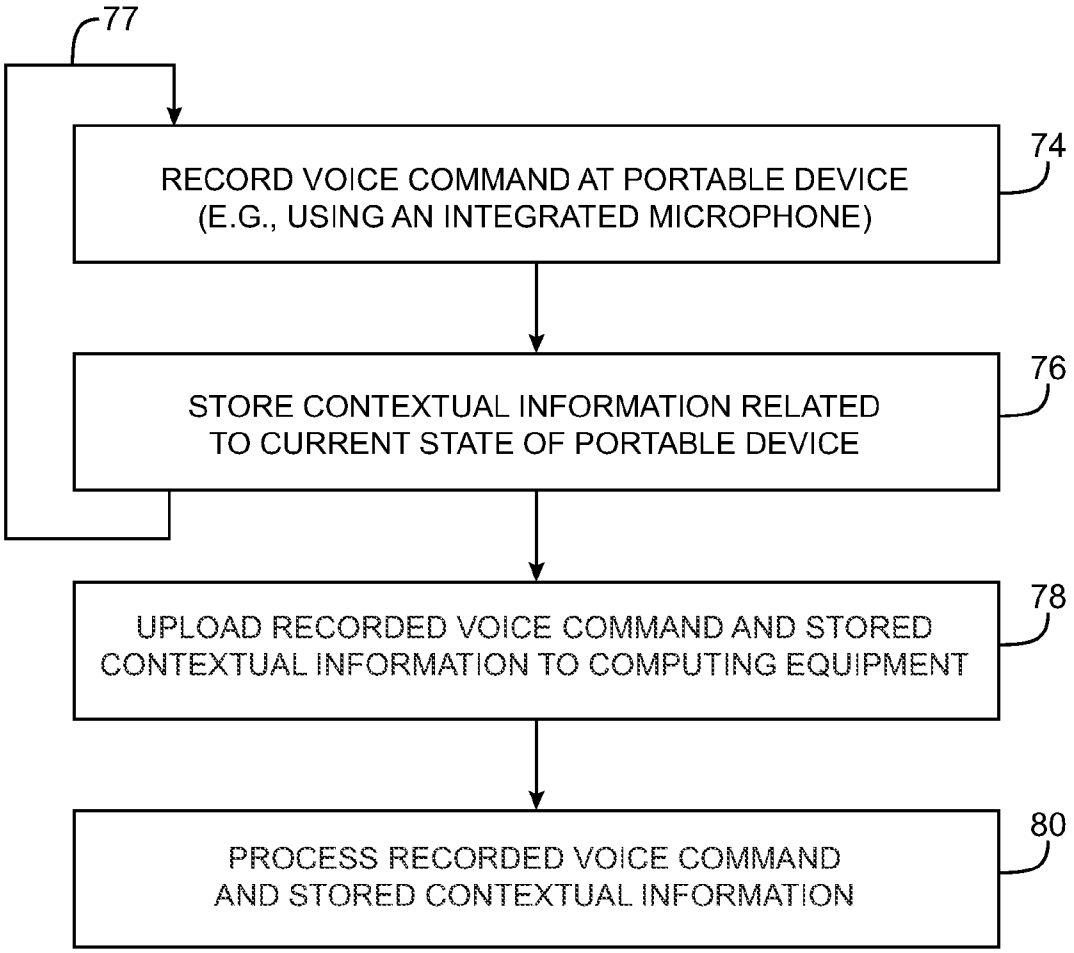
77
RECORD VOICE COMMAND AT PORTABLE DEVICE (E.G., USING AN INTEGRATED MICROPHONE)
74
STORE CONTEXTUAL INFORMATION RELATED TO CURRENT STATE OF PORTABLE DEVICE
76
UPLOAD RECORDED VOICE COMMAND AND STORED CONTEXTUAL INFORMATION TO COMPUTING EQUIPMENT
78
PROCESS RECORDED VOICE COMMAND AND STORED CONTEXTUAL INFORMATION
80

FIG. 6

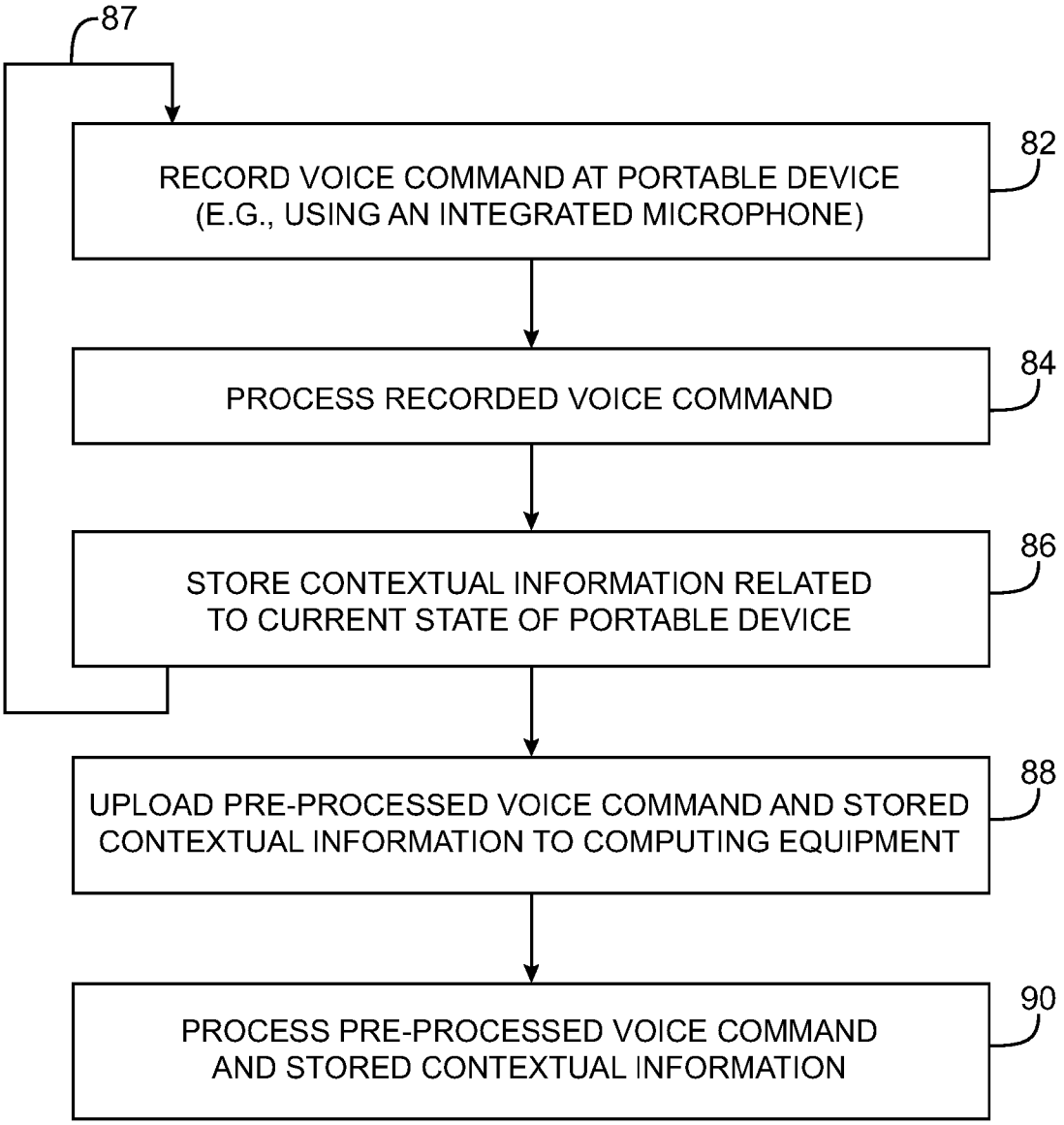
87
RECORD VOICE COMMAND AT PORTABLE DEVICE (E.G., USING AN INTEGRATED MICROPHONE)
82
PROCESS RECORDED VOICE COMMAND
84
STORE CONTEXTUAL INFORMATION RELATED TO CURRENT STATE OF PORTABLE DEVICE
86
UPLOAD PRE-PROCESSED VOICE COMMAND AND STORED CONTEXTUAL INFORMATION TO COMPUTING EQUIPMENT
88
PROCESS PRE-PROCESSED VOICE COMMAND AND STORED CONTEXTUAL INFORMATION
90

FIG. 7

ELECTRONIC DEVICES WITH VOICE COMMAND AND CONTEXTUAL DATA PROCESSING CAPABILITIES

BACKGROUND

[0001] This invention relates generally to electronic devices, and more particularly, to electronic devices such as portable electronic devices that can capture voice commands and contextual information.

[0002] Electronic devices such as portable electronic devices are becoming increasingly popular. Examples of portable devices include handheld computers, cellular telephones, media players, and hybrid devices that include the functionality of multiple devices of this type. Popular portable electronic devices that are somewhat larger than traditional handheld electronic devices include laptop computers and tablet computers.

[0003] Portable electronic devices such as handheld electronic devices may have limited speech recognition capabilities. For example, a cellular telephone may have a microphone that can be used to receive and process cellular telephone voice commands that control the operation of the cellular telephone.

[0004] Portable electronic devices generally have limited processing power and are not always actively connected to remote databases and services of interest. Conventional devices are often not contextually aware. These shortcomings can make it difficult to use conventional portable electronic devices for sophisticated voice-based control functions.

[0005] It would therefore be desirable to be able to provide improved systems for electronic devices such as portable electronic devices that handle voice-based commands.

SUMMARY

[0006] A portable electronic device such as a handheld electronic device is provided. The electronic device may have a microphone that is used to receive voice commands. The electronic device may use the microphone to record a user's voice. The recording of the user's voice may be stored as a digital audio file in storage associated with the electronic device.

[0007] When the electronic device receives a voice command, the electronic device may store information about the current state of the electronic device and its operating environment as contextual information (metadata). With one suitable arrangement, stored contextual information may include information about the operational state of the electronic device such as which applications are running on the device and their status. The electronic device may determine which portions of the information on the state of the device are relevant to the voice command and may store only the relevant portions. If desired, the electronic device may determine which contextual information is most relevant by performing a speech recognition operation on the recorded voice command to look for specific keywords.

[0008] The electronic device may process voice commands locally or voice commands processing may be performed remotely. For example, the electronic device may transmit one or more recorded voice commands and associated contextual information to computing equipment such as a desktop computer. Captured voice commands and contextual information may also be uploaded to server computing equipment over a network. The electronic device may transmit recorded voice commands and the associated contextual information at any suitable time such as when instructed by a user, as each voice command is received, immediately after each voice command is received, whenever the electronic device is synched with appropriate computing equipment, or other suitable times.

[0009] After a recorded voice command and associated contextual information have been transferred to a desktop computer, remote server, or other computing equipment, the computing equipment may process the voice command using a speech recognition operation. The computing equipment may use the results of the speech recognition operation and any relevant contextual information together to respond to the voice command properly. For example, the computing equipment may respond to the voice command by displaying search results or performing other suitable actions). If desired, the computing equipment may convey information back to the electronic device in response to the voice command.

[0010] In a typical scenario, a user may make a voice command while directing the electronic device to record the voice command. The user may make the voice command while the electronic device is performing a particular operation with an application. For example, the user may be using the electronic device to play songs with a media application. While listening to a song, the user may press a record button on the electronic device to record the voice command "find more like this." The voice command may be processed by the electronic device (e.g., to create a code representative of the spoken command) or may be stored in the form of an audio clip by the electronic device. At an appropriate time, such as when the electronic device is connected to a host computer or a remote server through a communications path, the code or the audio clip corresponding to the spoken command may be uploaded for further processing. Contextual information such as information on the song that was playing in the media application when the voice command was made may be uploaded with the voice command.

[0011] A media playback application on a computer such as the iTunes program of Apple Inc. may take an appropriate action in response to an uploaded voice command and associated contextual data. As an example, the media playback application may present a user with recommended songs for purchase. The songs that are recommended may be songs that are similar to the song that was playing on the electronic device when the user captured the audio clip voice command "find more like this."

[0012] The computer to which the voice command audio clip is uploaded may have greater processing power available than that available on a handheld electronic device, so voice processing accuracy may be improved by offloading voice recognition operations to the computer from the handheld electronic device in this way. The computer to which the audio clip is uploaded may also have access to more extensive data that would be available on a handheld electronic device such as the contents of a user's full home media library. The computer that receives the uploaded command may also have access to online resources such as an online server database. This database may have been difficult or impossible for the user to access from the handheld device when the voice command was captured.

[0013] If desired, the contextual information that is captured by the electronic device in association with a captured voice command may include audio information. For example,

a user may record a spoken phrase. Part of the spoken phrase may represent a voice command and part of the spoken phrase may include associated contextual information. As an example, a user may be using a mapping application on a handheld electronic device. The device may be presenting the user with a map that indicates the user's current position. The user may press a button or may otherwise instruct the handheld electronic device to record the phrase "I like American restaurants in this neighborhood." In response, the electronic device may record the spoken phrase. The recorded phrase (in this example), includes a command portion ("I like") that instructs the mapping application to create a bookmark or other indicator of the user's preference. The recorded phrase also includes the modifier "American restaurants" to provide partial context for the voice command. Additional contextual information (i.e., the phrase "in this neighborhood) and accompanying position data (e.g., geographic coordinates from global positioning system circuitry in the device) may also be supplied in conjunction with the recorded voice command. When uploaded, the audio clip voice command and the associated audio clip contextual information can be processed by speech recognition software and appropriate actions taken.

[0014] Further features of the invention, its nature and various advantages will be more apparent from the accompanying drawings and the following detailed description of the preferred embodiments.

BRIEF DESCRIPTION OF THE DRAWINGS

[0015] FIG. **1** is a diagram of an illustrative system environment in which a portable electronic device and computing equipment with speech recognition functionality may be used in accordance with an embodiment of the present invention.

[0016] FIG. **2** is a perspective view of an illustrative portable electronic device in accordance with an embodiment of the present invention.

[0017] FIG. **3** is a schematic diagram of an illustrative portable electronic device in accordance with an embodiment of the present invention.

[0018] FIG. **4** is a schematic diagram of illustrative computing equipment that may be used in processing voice commands from a portable electronic device in accordance with an embodiment of the present invention.

[0019] FIG. **5** is a flowchart of illustrative steps involved in using a portable electronic device to receive and process voice commands in accordance with an embodiment of the present invention.

[0020] FIG. **6** is a flowchart of illustrative steps involved in using a portable electronic device to receive and upload voice commands and using computing equipment to process the voice commands in accordance with an embodiment of the present invention.

[0021] FIG. **7** is a flowchart of illustrative steps involved in using a portable electronic device to receive, process, and upload voice commands and using computing equipment to process the voice commands in accordance with an embodiment of the present invention.

DETAILED DESCRIPTION

[0022] The present invention relates to using voice commands to control electronic systems.

[0023] Voice commands may be captured with an electronic device and uploaded to computing equipment for further processing. Electronic devices that may be used in this type of environment may be portable electronic devices such as laptop computers or small portable computers of the type that are sometimes referred to as ultraportables. Portable electronic devices may also be somewhat smaller devices. Examples of smaller portable electronic devices include wrist-watch devices, pendant devices, headphone and earpiece devices, and other wearable and miniature devices. With one suitable arrangement, the portable electronic devices may be wireless electronic devices.

[0024] The wireless electronic devices may be, for example, handheld wireless devices such as cellular telephones, media players with wireless communications capabilities, handheld computers (also sometimes called personal digital assistants), global positioning system (GPS) devices, and handheld gaming devices. The wireless electronic devices may also be hybrid devices that combine the functionality of multiple conventional devices. Examples of hybrid portable electronic devices include a cellular telephone that includes media player functionality, a gaming device that includes a wireless communications capability, a cellular telephone that includes game and email functions, and a portable device that receives email, supports mobile telephone calls, has music player functionality and supports web browsing. These are merely illustrative examples.

[0025] An illustrative environment in which a user may interact with system components using voice commands is shown in FIG. **1**. A user in system **10** may have an electronic device such as user device **12**. User device **12** may be used to receive voice commands (e.g., to record a user's voice). If device **12** has sufficient processing power, the voice commands may be partly or fully processed by user device **12** (e.g., using a speech recognition engine such as speech recognition engine **13**). If desired, the voice commands may be transmitted by user device **12** to computing equipment **14** over communications path **20**. Voice commands may also be conveyed to remote services **18** over network **16** (e.g., via path **21** or via path **20**, equipment **14**, and path **17**).

[0026] When user device **12** transmits voice commands to computing equipment **14**, the user device may include contextual information along with the voice commands. User device **12**, computing equipment **14**, and services **18** may be connected through a network such as communications network **16**. Network **16** may be, for example, a local area network, a wide area network such as the Internet, a wired network, a wireless network, or a network formed from multiple networks of these types. User device **12** may connect to communications network **16** through a wired or wireless communications path such as path **21** or may connect to network **16** via equipment **14**. In one embodiment of the invention, user device **12** may transmit voice commands and contextual information to computing equipment **14** through communications network **16**. User device **12** may also transmit voice commands and contextual information to computing equipment **14** directly via communications path **20**. Path **20** may be, for example, a universal serial bus (USB®) path or any other suitable wired or wireless path.

[0027] User device **12** may have any suitable form factor. For example, user device **12** may be provided in the form of a handheld device, desktop device, or even integrated as part of a larger structure such as a table or wall. With one particularly suitable arrangement, which is sometimes described herein as an example, user device **12** may be provided with a handheld form factor. For example, device **12** may be a handheld elec-

tronic device. Illustrative handheld electronic devices that may be provided with voice command recording capabilities include cellular telephones, media players, media players with wireless communications capabilities, handheld computers (also sometimes called personal digital assistants), global positioning system (GPS) devices, handheld gaming devices, and other handheld devices. If desired, user device **12** may be a hybrid device that combines the functionality of multiple conventional devices. Examples of hybrid handheld devices include a cellular telephone that includes media player functionality, a gaming device that includes a wireless communications capability, a cellular telephone that includes game and email functions, and a handheld device that receives email, supports mobile telephone calls, supports web browsing, and includes media player functionality. These are merely illustrative examples.

[0028] Computing equipment **14** may include any suitable computing equipment such as a personal desktop computer, a laptop computer, a server, etc. With one suitable arrangement, computing equipment **14** is a computer that establishes a wired or wireless connection with user device **12**. The computing equipment may be a server (e.g., an internet server), a local area network computer with or without internet access, a user's own personal computer, a peer device (e.g., another user device **12**), any other suitable computing equipment, and combinations of multiple pieces of computing equipment. Computing equipment **14** may be used to implement applications such as media playback applications (e.g., iTunes® from Apple Inc.), a web browser, a mapping application, an email application, a calendar application, etc.

[0029] Computing equipment **18** (e.g., one or more servers) may be associated with one or more online services.

[0030] Communications path **17** and the other paths in system **10** such as path **20** between device **12** and equipment **14**, path **21** between device **12** and network **16**, and the paths between network **16** and services **18** may be based on any suitable wired or wireless communications technology. For example, the communications paths in system **10** may be based on wired communications technology such as coaxial cable, copper wiring, fiber optic cable, universal serial bus (USB®), IEEE 1394 (FireWire®), paths using serial protocols, paths using parallel protocols, and Ethernet paths. Communications paths in system **10** may, if desired, be based on wireless communications technology such as satellite technology, radio-frequency (RF) technology, wireless universal serial bus technology, and Wi-Fi® or Bluetooth® 802.11 wireless link technologies. Wireless communications paths in system **10** may also include cellular telephone bands such as those at 850 MHz, 900 MHz, 1800 MHz, and 1900 MHz (e.g., the main Global System for Mobile Communications or GSM cellular telephone bands), one or more proprietary radio-frequency links, and other local and remote wireless links. Communications paths in system **10** may also be based on wireless signals sent using light (e.g., using infrared communications) or sound (e.g., using acoustic communications).

[0031] Communications path **20** may be used for one-way or two-way transmissions between user device **12** and computing equipment **14**. For example, user device **12** may transmit voice commands and contextual information to computing equipment **14**. After receiving voice commands and contextual information from user device **12**, computing equipment **14** may process the voice commands and contextual information using a speech recognition engine such as speech recognition engine **15**. Engine **15** may be provided as a standalone software component or may be integrated into a media playback application or other application. If desired, computing equipment **14** may transmit data signals to user device **12**. Equipment **14** may, for example, transmit information to device **12** in response to voice commands transmitted by device **12** to system **14**. For example, when a voice command transmitted by device **12** includes a request to search for information, system **14** may transmit search results back to device **12**.

[0032] Communications network **16** may be based on any suitable communications network or networks such as a radio-frequency network, the Internet, an Ethernet network, a wireless network, a Wi-Fi network, a Bluetooth network, a cellular telephone network, or a combination of such networks.

[0033] Services **18** may include any suitable online services. Services **18** may include a speech recognition service (e.g., a speech recognition dictionary), a search service (e.g., a service that searches a particular database or that performs Internet searches), an email service, a media service, a software update service, an online business service, etc. Services **18** may communicate with computing equipment **14** and user device **12** through communications network **16**.

[0034] In typical user, user device **12** may be used to capture voice commands from a user during the operation of user device **12**. For example, user device **12** may receive one or more voice commands during a media playback operation (e.g., during playback of a music file or a video file). User device **12** may then store information about its current operational state as contextual information. User device **12** may record information related to the current media playback operation. Other contextual information may be stored when other applications are running on device **12**. For example, user device **12** may store information related to a web-browsing application, the location of user device **12**, or other appropriate information on the operating environment for device **12**. Following the reception of a voice command, user device **12** may, if desired, perform a speech recognition operation on the voice command. User device **12** may utilize contextual information about the state of the user device at the time the voice command was received during the associated speech recognition operation.

[0035] In addition to or in lieu of performing a local speech recognition operation on the voice command using engine **13**, user device **12** may forward the captured voice command audio clip and, if desired, contextual information to computing equipment **14** for processing. Computing equipment **14** may use engine **15** to implement speech recognition capabilities that allow computing equipment **14** to respond to voice commands that user device **12** might otherwise have difficulties in processing. For example, if user device **12** were to receive a voice command to "find Italian restaurants near me," user device **12** might not be able to execute the voice command immediately for reasons such as an inability to perform adequate speech processing due to a lack of available processing power, an inability to perform a search requested by a voice command due to a lack of network connectivity, etc. In this type of situation, device **12** may save the voice command (e.g., as a recorded audio file of a user's voice) and relevant contextual information (e.g., the current location of user device **12**) for transmission to computing equipment **14** for further processing of the voice command. Device **12** may transmit voice commands and contextual information to computing equipment **14** at any suitable time (e.g., when device

12 is synched with computing equipment 14, as the voice commands are received by device 12, whenever device 12 is connected to a communications network, etc.). These transmissions may take place simultaneously or as two separate but related transmissions.

[0036] With one suitable arrangement, device 12 may save all available contextual information. With another arrangement, device 12 may perform a either a cursory or a full speech recognition operation on voice commands to determine what contextual information is relevant and then store only the relevant contextual information. As an example, user device 12 may search for the words "music" and "location" in a voice command to determine whether the contextual information stored in association with the voice command should include information related to a current media playback operation or should include the current location of user device 12 (e.g., which may be manually entered by a user or may be determined using a location sensor).

[0037] An illustrative user device 12 in accordance with an embodiment of the present invention is shown in FIG. 2. User device 12 may be any suitable electronic device such as a portable or handheld electronic device.

[0038] User device 12 may handle communications over one or more wireless communications bands such as local area network bands and cellular telephone network bands.

[0039] Device 12 may have a housing 30. Display 34 may be attached to housing 30 using bezel 32. Display 34 may be a touch screen liquid crystal display (as an example).

[0040] Device 12 may have a microphone for receiving voice commands. Openings 42 and 40 may, if desired, form microphone and speaker ports. With one suitable arrangement, device 12 may have speech recognition capabilities (e.g., a speech recognition engine that can be used to receive and process voice commands from a user). Device 12 may also have audio capture and playback capabilities. Device 12 may be able to receive voice commands from a user and other audio though a microphone (e.g., formed as part of one or more ports such as openings 40 and 42). Port 41 may be, for example, a speaker sport. If desired, device 12 may activate its audio recording and/or speech recognition capabilities (e.g., device 12 may begin recording audio signals associated with a user's voice with a microphone) in response to user input. For example, device 12 may present an on-screen selectable option to the user to activate speech recognition functionality. Device 12 may also have a user input device such as button 37 that is used to receive user input to activate speech recognition functionality.

[0041] User device 12 may have other input-output devices. For example, user device 12 may have other buttons. Input-output components such as port 38 and one or more input-output jacks (e.g., for audio and/or video) may be used to connect device 12 to computing equipment 14 and external accessories. Button 37 may be, for example, a menu button. Port 38 may contain a 30-pin data connector (as an example). Suitable user input interface devices for user device 12 may also include buttons such as alphanumeric keys, power on-off, power-on, power-off, voice memo, and other specialized buttons, a touch pad, pointing stick, or other cursor control device, or any other suitable interface for controlling user device 12. In the example of FIG. 2, display screen 34 is shown as being mounted on the front face of user device 12, but display screen 34 may, if desired, be mounted on the rear face of user device 12, on a side of user device 12, on a flip-up portion of user device 12 that is attached to a main body portion of user device 12 by a hinge (for example), or using any other suitable mounting arrangement. Display 34 may also be omitted Although shown schematically as being formed on the top face of user device 12 in the example of FIG. 2, buttons such as button 37 and other user input interface devices may generally be formed on any suitable portion of user device 12. For example, a button such as button 37 or other user interface control may be formed on the side of user device 12. Buttons and other user interface controls can also be located on the top face, rear face, or other portion of user device 12. If desired, user device 12 can be controlled remotely (e.g., using an infrared remote control, a radio-frequency remote control such as a Bluetooth® remote control, etc.). With one suitable arrangement, device 12 may receive voice commands and other audio through a wired or wireless headset or other accessory. Device 12 may also activate its speech recognition functionality in response to user input received through a wired or wireless headset (e.g., in response to a button press received on the headset).

[0042] Device 12 may use port 38 to perform a synchronization operation with computing equipment 14. With one suitable arrangement, device 12 may transmit voice commands and contextual information to computing equipment 14. For example, during a media playback operation, device 12 may receive a voice command to "find more music like this." If desired, device 12 may upload the voice command and relevant contextual information (e.g., the title and artist of the media file that was playing when the voice command was received) to computing equipment 14. Computing equipment 14 may receive and process the voice command and relevant contextual information and may perform a search for music that is similar to the media file that was playing when the voice command was received. Computing equipment 14 may then respond by displaying search results, purchase recommendations, etc.

[0043] Device 12 may receive data signals from computing equipment 14 in response to uploading voice commands and contextual information. The data received by device 12 from equipment 14 in response to voice commands and contextual information may be used by device 12 to carry out requests associated with the voice commands. For example, after processing the voice command and contextual information, computing equipment 14 may transmit results associated with the voice command to user device 12 which may then display the results.

[0044] A schematic diagram of an embodiment of an illustrative user device 12 is shown in FIG. 3. User device 12 may be a mobile telephone, a mobile telephone with media player capabilities, a media player, a handheld computer, a game player, a global positioning system (GPS) device, a combination of such devices, or any other suitable electronic device such as a portable device.

[0045] As shown in FIG. 3, user device 12 may include storage 44. Storage 44 may include one or more different types of storage such as hard disk drive storage, nonvolatile memory (e.g., flash memory or other electrically-programmable-read-only memory), volatile memory (e.g., battery-based static or dynamic random-access-memory), etc. Storage 44 may be used to store voice commands and contextual information about the state of device 12 when voice commands are received.

[0046] Processing circuitry 46 may be used to control the operation of user device 12. Processing circuitry 46 may be based on a processor such as a microprocessor and other

suitable integrated circuits. With one suitable arrangement, processing circuitry **46** and storage **44** are used to run software on user device **12**, such as speech recognition applications, internet browsing applications, voice-over-internet-protocol (VOIP) telephone call applications, email applications, media playback applications, operating system functions (e.g., operating system functions supporting speech recognition capabilities), etc. Processing circuitry **46** and storage **44** may be used in implementing analog-to-digital conversion functions for capturing audio and may be used to implement speech recognition functions.

[0047] Input-output devices **48** may be used to allow data to be supplied to user device **12** and to allow data to be provided from user device **12** to external devices. Display screen **34**, button **37**, microphone port **42**, speaker port **40**, speaker port **41**, and dock connector port **38** are examples of input-output devices **48**.

[0048] Input-output devices **48** can include user input devices **50** such as buttons, touch screens, joysticks, click wheels, scrolling wheels, touch pads, key pads, keyboards, microphones, cameras, etc. A user can control the operation of user device **12** by supplying commands through user input devices **50**. Display and audio devices **52** may include liquid-crystal display (LCD) screens or other screens, light-emitting diodes (LEDs), and other components that present visual information and status data. Display and audio devices **52** may also include audio equipment such as speakers and other devices for creating sound. Display and audio devices **52** may contain audio-video interface equipment such as jacks and other connectors for external headphones, microphones, and monitors.

[0049] Wireless communications devices **54** may include communications circuitry such as radio-frequency (RF) transceiver circuitry formed from one or more integrated circuits, power amplifier circuitry, passive RF components, one or more antennas, and other circuitry for handling RF wireless signals. Wireless signals can also be sent using light (e.g., using infrared communications circuitry in circuitry **54**).

[0050] User device **12** can communicate with external devices such as accessories **56** and computing equipment **58**, as shown by paths **60**. Paths **60** may include wired and wireless paths (e.g., bidirectional wireless paths). Accessories **56** may include headphones (e.g., a wireless cellular headset or audio headphones) and audio-video equipment (e.g., wireless speakers, a game controller, or other equipment that receives and plays audio and video content).

[0051] Computing equipment **58** may be any suitable computer such as computing equipment **14** or computing equipment **18** of FIG. **1**. With one suitable arrangement, computing equipment **58** is a computer that has an associated wireless access point (router) or an internal or external wireless card that establishes a wireless connection with user device **12**. The computer may be a server (e.g., an internet server), a local area network computer with or without internet access, a user's own personal computer, a peer device (e.g., another user device **12**), or any other suitable computing equipment. Computing equipment **58** may be associated with one or more online services. A link such as link **60** may be used to connect device **12** to computing equipment such as computing equipment **14** of FIG. **1**.

[0052] Wireless communications devices **54** may be used to support local and remote wireless links. Examples of local wireless links include infrared communications, Wi-Fi® (IEEE 802.11), Bluetooth®, and wireless universal serial bus (USB) links.

[0053] If desired, wireless communications devices **54** may include circuitry for communicating over remote communications links. Typical remote link communications frequency bands include the cellular telephone bands at 850 MHz, 900 MHz, 1800 MHz, and 1900 MHz, the global positioning system (GPS) band at 1575 MHz, and data service bands such as the 3G data communications band at 2170 MHz band (commonly referred to as UMTS or Universal Mobile Telecommunications System). In these illustrative remote communications links, data is transmitted over links **60** that are one or more miles long, whereas in short-range links **60**, a wireless signal is typically used to convey data over tens or hundreds of feet.

[0054] A schematic diagram of an embodiment of illustrative computing equipment **140** is shown in FIG. **4**. Computing equipment **140** may include any suitable computing equipment such as a personal desktop computer, a laptop computer, a server, etc. and may be used to implement computing equipment **14** and/or computing equipment **18** of FIG. **1**. Computing equipment **140** may be a server (e.g., an internet server), a local area network computer with or without internet access, a user's own personal computer, a peer device (e.g., another user device **12**), other suitable computing equipment, or combinations of multiple pieces of such computing equipment. Computing equipment **140** may be associated with one or more services such as services **18** of FIG. **1**.

[0055] As shown in FIG. **4**, computing equipment **140** may include storage **64** such as hard disk drive storage, nonvolatile memory, volatile memory, etc. Processing circuitry **62** may be used to control the operation of computing equipment **140**. Processing circuitry **62** may be based on one or more processors such as microprocessors, microcontrollers, digital signal processors, application specific integrated circuits, and other suitable integrated circuits. Processing circuitry **62** and storage **64** may be used to run software on computing equipment **140** such as speech recognition applications, operating system functions, audio capture applications, other applications with voice recognition and/or audio capture functionality, and other software applications.

[0056] Input-output circuitry **66** may be used to gather user input and other input data and to allow data to be provided from computing equipment **140** to external devices. Input-output circuitry **66** can include devices such as mice, keyboards, touch screens, microphones, speakers, displays, televisions, speakers, wired communications circuitry, and wireless communications circuitry.

[0057] Illustrative steps involved in using an electronic device such as user device **12** to gather voice commands and contextual information are shown in FIG. **5**.

[0058] At step **68**, an electronic device such as user device **12** of FIG. **1** may receive a voice command. Voice commands may be received from a user using an integrated microphone such as a microphone in microphone port **42**. If desired, voice commands may be received using an external microphone (e.g., a microphone in an accessory such as a wired or wireless headset).

[0059] Voice commands may be recorded (e.g., stored) in storage such as storage **44** of FIG. **3**. Voice commands may be stored as a digital audio recording (e.g., an MP3 audio clip). With one suitable arrangement, voice commands may be stored in long-term storage (e.g., nonvolatile memory, hard

disk drive storage, etc.) so that the voice commands may be processed at a later time. If desired, voice commands may be stored in short-term storage (e.g., volatile memory).

[0060] At step **70**, user device **12** may store contextual information related to the current state of the user device. The contextual information may include any information that is available about the current state of the user device. For example, the contextual information may include information related to a current media playback operation (e.g., media attributes such as a track name, a title, an artist name, an album name, year, genre, etc.), a current web-browsing operation (e.g., a current web-address), the geographic location of the user device (e.g., a location determined using a location sensor, a location derived from information associated with communications path **20** and **21** such as which cellular telephone network or other network the device is connected to, or location data manually entered by a user), the current date and time, a telephone operation (e.g., a telephone number or contact information associated with a current or previous telephone call), information from other software applications running on device **12** such as mapping applications, business productivity applications, email applications, calendar applications, calendar applications, games, etc. The contextual information may include contextual information related to operations occurring in the background of the operation of device **12**. For example, contextual information may include media playback information in addition to web browsing information when user device **12** is being used to browse the Internet while listening to music in the background.

[0061] With one suitable arrangement, user device **12** may store voice commands as audio clips without performing local voice recognition operations. If desired, user device **12** may perform a speech recognition operation on a voice command. The results of this operation may be used to convert the command into a code or may be used to determine which contextual information is most relevant. Device **12** may then store this most relevant contextual information. For example, user device **12** may perform a preliminary speech recognition operation to search for specific keywords such as "music," "location," "near," and other suitable keywords to determine which contextual information would be most relevant. With this type of arrangement, keywords such as "location" and "near" may indicate that location information is relevant while keywords such as "music" may indicate that information associated with a current media playback operation is most likely to be relevant.

[0062] A voice command that has been recorded in step **68** may be processed at step **70**. User device **12** may process the voice command using a speech recognition engine. When user device **12** processes the voice command, user device **12** may also process contextual information stored in step **70**. With one suitable arrangement, user device **12** may process each voice command with a speech recognition application that runs on processing circuitry such as circuitry **46**. If the speech recognition application is able to successfully recognize the speech in the voice command, user device **12** may attempt to perform the action or actions requested by the voice command using any relevant contextual information. For example, the voice command "find more music like this" may be interpreted by user device **12** to mean that the user device should perform a search for music that has the same genre as music that was playing when the voice command was received. User device **12** may therefore perform a search for music using the genre of the currently playing music as a search criteria.

[0063] With one suitable arrangement, voice commands may be associated with a list of available media files on user device **12** so that the list of media files serve as contextual information. Image captures and captured audio and/or video clips can also serve as contextual information. For example, user device **12** may have an integrated camera that can be used to take pictures. In this example, user device **12** may allow a user to supply a voice command and to associate the voice command with one or more pictures so that the pictures serve as contextual information. In one example of this type of arrangement, if user device **12** receives the voice command "identify this car" and receives information associating the voice command with a picture containing a car, user device **12** may transmit the picture to a service capable of identifying cars from pictures.

[0064] Illustrative steps involved in using a portable electronic device such as user device **12** to receive and upload voice commands and in using computing equipment such as computing equipment **14** to process the uploaded voice commands are shown in FIG. **6**.

[0065] At step **74**, user device **12** may record a voice command. The voice command may be recorded as an audio clip when a user pressed and releases a record button or supplies other user input directing device **12** to capture the voice command. The voice command may be digitized by device **12** and stored in storage associated with user device **12** such as storage **44**.

[0066] At step **76**, user device **12** may store contextual information in storage. If desired, user device **12** may store only the contextual information that is relevant to the captured voice command. As indicated by line **77**, the operations of steps **74** and **76** may be repeated (e.g., user device **12** may record numerous voice commands each of which may be associated with corresponding contextual information).

[0067] If desired, user device **12** may present the user with an opportunity to record an audio clip that includes both a voice command and contextual information. An example of a possible audio clip that includes both a voice command and contextual information and that could be received by user device **12** is "create new event for Sunday, July 18th: James's Birthday." In this example, the voice command corresponds to the user's desire for user device **12** to create a new calendar event and the relevant contextual information is included in the audio clip (e.g., the date of the new event "Sunday, July 18th" and the title of the new event "James's Birthday").

[0068] At step **78**, user device **12** may upload recorded voice commands and stored contextual information to computing equipment such as equipment **14** or equipment **18**. User device **12** may upload recorded voice commands and stored contextual information to computing equipment **14** or equipment **18** using any suitable communications path. For example, user device **12** may transmit voice commands and contextual information to equipment **14** directly over communications path **20**, indirectly through communications network **16** over paths **17** and **21**, or may upload them to equipment **18** over network **16**.

[0069] The operations of step **78** may be performed at any suitable time. For example, user device **12** may upload stored voice commands and contextual information whenever user device **12** is coupled to the computing equipment directly (e.g., through a communications path such as path **20** which

may be a Universal Serial Bus® communication path), whenever user device **12** is coupled to computing equipment indirectly (e.g., through communication network **16** and paths **17** and **21**), whenever voice commands are recorded at step **74** and a communications link to the computing equipment is available, on demand (e.g., when user device **12** receives a command from a user to process voice commands by uploading them to the computing equipment), at regular intervals (e.g., every ten minutes, every half hour, every hour, etc.), and at combinations of these and other suitable times.

[0070] At step **80**, computing equipment such as computing equipment **14** or **18** may process voice commands and contextual information from user device **12**. Computing equipment **14** or **18** may process voice commands using speech recognition software (e.g., speech recognition engines) running on processing circuitry **62** of FIG. **4**, as an example. Computing equipment **14** or **18** may utilize contextual information in processing the associated voice command. For example, when a voice command requests that more music be found that is similar to a given media file, computing equipment **14** or **18** may perform a search of music based on information about the given media file. In another example, the voice command "find nearby retail establishments" may be interpreted by user device **12**, computing equipment **14**, or equipment **18** to mean that a search should be performed for retail establishments that are within a given distance of user device **12**. The given distance may be any suitable distance such as a pre-specified distance (e.g., walking distance, one-half mile, one mile, two miles, etc.) and a distance specified as part of the voice command. The voice command may also specify which types of retail establishments the search should include. For example, the voice command "find Italian restaurants within three blocks" specifies a type of retail establishment (restaurants), a particular style of restaurant (Italian), and the given distance over which the search should be performed (within three blocks of the geographical location of the user device that received the voice command).

[0071] If desired, computing equipment **14** or **18** may fulfill a voice command directly. For example, when user device **12** is connected to computing equipment **14** or **18** (e.g., when device **12** is synched with the equipment), the computing equipment may display results related to the voice command (e.g., a list of similar music) and may perform any appropriate action (e.g., transmit a picture to a car-identification service and then display any results returned by the car-identification service).

[0072] With another suitable arrangement, computing equipment **14** or **18** may transmit information related to processing and responding to the voice command to user device **12**. In response, user device **12** may then respond to the voice command. This type of arrangement may be particularly beneficial when user device **12** and the computing equipment are not physically located near each other (e.g., when user device **12** is only connected to computing equipment **14** or **18** through long-range communications paths such as through a communications network such as the Internet).

[0073] Illustrative steps involved in using a portable electronic device such as user device **12** to receive, process, and upload voice commands and in using computing equipment such as computing equipment **14** or **18** to process the voice commands are shown in FIG. **7**.

[0074] At step **82**, user device **12** may record a voice command. The voice command may be stored in storage such as storage **44**.

[0075] Following step **82**, user device **12** may process the recorded voice command at step **84**. User device **12** may process the voice command at any suitable time (e.g., as the voice command is received or at any later time). If desired, user device **12** may perform a preliminary speech recognition operation to determine which portions of the available contextual information are relevant to the voice command. Device **12** may search for specific keywords in the voice command to determine which portions of the available contextual information are relevant, as an example. With another suitable arrangement, device **12** may perform a more thorough speech recognition operation. In this type of arrangement, device **12** may determine that it is able to respond to the voice command immediately (e.g., by executing an operation or by retrieving appropriate information from an appropriate service **18**).

[0076] If desired, user device **12** may be trained to one or more users' voices. For example, user device **12** may instruct each user to speak a specific set of sample words in order to train its speech recognition operations to be as accurate as possible for each particular user.

[0077] When device **12** is not able to fulfill the voice command at the time the voice command is received, device **12** may store contextual information related to the state of user device **12** at the time the voice command was received in storage (step **86**).

[0078] As illustrated by line **87**, the operations of steps **82**, **84**, and **86** may optionally be repeated as user device **12** receives numerous voice commands that it is not able to fulfill (e.g., respond to) without further processing by computing equipment **14** or **18**.

[0079] At step **88**, user device **12** may upload one or more voice commands and contextual information associated with each of the voice commands to computing equipment **14** or **18**. User device **12** may upload the voice commands to computing equipment **14** or **18** at any suitable time.

[0080] At step **90**, computing equipment **14** or **18** may process voice commands received from user device **12**. Computing equipment **14** or **18** may utilize the contextual information associated with each voice command in processing each of the voice commands (e.g., in using a speech recognition engine to process each voice command and associated contextual information).

[0081] If desired, computing equipment **14** or **18** may be trained to one or more users' voices. For example, computing equipment **14** or **18** may instruct each user to speak a specific set of sample words in order to train its speech recognition operations to be as accurate as possible for each particular user. With one suitable arrangement, computing equipment **14** or **18** and user device **12** may share information related to training speech recognition operations to particular users.

[0082] The voice commands processed and stored by user device **12** and processed by computing equipment **14** or **18** may include any suitable voice commands. With one suitable arrangement, user device **12** and computing equipment **14** or **18** may each have a respective dictionary of voice commands that can be recognized using the speech recognition capabilities of user device **12** and computing equipment **14** or **18**. Because computing equipment **14** or **18** may include any type of computing equipment including desktop computers and computer servers which generally have relatively large amount of processing and storage capabilities compared to portable devices such as user device **12**, computing equipment **14** or **18** will generally have a larger dictionary of voice

commands that the equipment can recognize using speech recognition operations. By uploading voice commands and contextual information from user device **12** to computing equipment **14** or **18**, the probability that a given voice command can be successfully processed and fulfilled will generally increase. With one suitable arrangement, user device **12** may have a closed dictionary (e.g., a dictionary containing only specific keywords and phrase) whereas computing equipment **14** or **18** may have an open dictionary (e.g., a dictionary that can include essentially any word or phrase and which may be provided by a service such as one of services **18**).

[0083] When user device **12** is not connected to communications networks such as network **16** or to computing equipment **14** or **18** over path **20**, user device **12** may not always have the capabilities required to satisfy (e.g., fulfill) a particular voice command at the time the voice command is received. For example, if user device **12** is not connected to a communications network and receives a voice command to "find more music like this," user device **12** may be able to determine, using a speech recognition dictionary associated with device **12**, that a user wants device **12** to perform a search for music that matches the profile of music currently playing through device **12**. However, because user device **12** is not currently connected to a communications network, device **12** may not be able to perform the search immediately. In this situation, device **12** may store the voice command and perform the requested action later at an appropriate time (e.g., when device **12** is connected to computing equipment **14** or **18** or when device **12** connects to a service at equipment **18** through a communications network such as network **16**).

[0084] Because user device **12** can upload voice commands and contextual information to computing equipment **14** or **18**, user device **12** may be able to support an increased amount of voice commands and may be able to respond in a more complete manner than if user device **12** performed speech recognition operations without the assistance of equipment **14** or **18**. For example, user device **12** can record voice commands that it is unable to comprehend using its own speech recognition capabilities and can transmit the voice commands and relevant contextual information to computing equipment **14** or **18**, which may be more capable and therefore more able to comprehend and respond to the voice commands.

[0085] As the foregoing demonstrates, users can capture voice commands on device **12** for immediate processing in a device that includes a speech recognition (voice processing) engine. In the event that no speech recognition processing functions are implemented on device **12** or when it is desired to offload voice recognition functions to remote equipment, device **12** may be used to capture an audio clip that includes a voice command.

[0086] Any suitable user interface may be used to initiate voice command recording operations. For example, a dedicated button such as a record button may be pressed to initiate voice command capture operations and may be released to terminate voice command capture operations. The start and end of the voice command may also be initiated using a touch screen and on-screen options. The end of the voice command clip may be determined by the expiration of a timer (e.g., all clips may be three seconds long) or device **12** may terminate recording when the ambient sound level at the microphone drops below a given threshold.

[0087] Recorded audio clips may be digitized in device **12** using any suitable circuitry. As an example, device **12** may have a microphone amplifier and associated analog-to-digital converter circuitry that digitizes audio clips. Audio clips may be compressed (e.g., using file formats such as the MP3 format).

[0088] Contextual information may be captured concurrently. For example, information may be stored on the current operating state of device **12** when a user initiates a voice command capture operation. Stored contextual information may include information such as information on which applications are running on device **12** and their states, the geographic location of device **12** (e.g., geographic coordinates), the orientation of device **12** (e.g., from an orientation sensor in device **12**), information from other sensors in device **12**, etc.

[0089] Because voice command processing can be deferred until device **12** is connected to appropriate computing equipment, it is not necessary for device **12** to immediately communicate with the computing equipment. As user may, for example, capture voice commands while device **12** is offline (e.g., when a user is in an airplane without network connectivity). Device **12** may also be used to capture voice commands that are to be executed by the user's home computer, even when the user's home computer is not powered.

[0090] Later, when device **12** is connected to the user's home computer and/or an online service, the captured voice commands can be uploaded and processed by this external computing equipment. The contextual information that was captured when the voice command was captured may help the external computing equipment (e.g., the user's computer or a remote server) properly process the voice command. The computing equipment to which the voice command is uploaded may be able to access data that was unavailable to device **12** when the command was captured, such as information on the contents of a user's media library or other database, information that is available from an online repository, etc. The computing equipment to which the voice command and contextual information were uploaded may also be able to take actions that are not possible when executing commands locally on device **12**. These actions may include actions such as making adjustments to a database on the computing equipment, making online purchases, controlling equipment that is associated with or attached to the computing equipment, etc.

[0091] The foregoing is merely illustrative of the principles of this invention and various modifications can be made by those skilled in the art without departing from the scope and spirit of the invention.

What is claimed is:

1. A method for using a portable electronic device to handle voice commands, wherein the portable electronic device can communicate with remote computing equipment over a communications path, comprising:

in response to user input, recording a voice command on the portable electronic device;

when recording the voice command on the portable electronic device, storing contextual information related to a current operational state of the portable electronic device; and

after recording the voice command and storing the contextual information at the portable electronic device, uploading the recorded voice command and the stored contextual information from the portable electronic device to the remote computing equipment over the communications path.

2. The method defined in claim **1** wherein the user input comprises a button press and wherein recording the voice command comprises:

recording the voice command on the portable electronic device in response to the button press.

3. The method defined in claim **2** wherein a media player application on the portable electronic device plays media files and wherein storing the contextual information comprises:

storing information on a given media file being played by the media player application as part of the contextual information stored on the portable electronic device.

4. The method defined in claim **3** wherein the remote computing equipment comprises a computer running a media player application, and wherein uploading the recorded voice command and the contextual information comprises:

uploading the stored information on the given media file and the recorded voice command to the media player application on the computer.

5. The method defined in claim **1** wherein storing the contextual information comprises:

recording an audio clip that contains contextual information.

6. The method defined in claim **5** wherein recording the audio clip comprises:

recording words spoken by a user of the portable electronic device.

7. A method for processing a voice command received by a portable electronic device using computing equipment that may communicate with the portable electronic device over a communications path, the method comprising:

at the computing equipment, receiving the voice command and contextual information that is associated with an operational state of the portable electronic device over the communications path.

8. The method defined in claim **7** further comprising:

at the computing equipment, processing the voice command and the contextual information using a speech recognition engine.

9. The method defined in claim **7** wherein the voice command is associated with a request from a user to perform a search, the method further comprising:

at the computing equipment, performing the search; and

at the computing equipment, generating search results.

10. The method defined in claim **9** further comprising:

at the computing equipment, displaying the search results associated with the request from the user.

11. The method defined in claim **9** further comprising:

transmitting the search results from the computing equipment to the portable electronic device over the communications path.

12. The method defined in claim **7** wherein the portable electronic device comprises an electronic device with media playback capabilities, wherein the portable electronic device was being used to playback a given media file when the voice command was received by the portable electronic device, wherein the voice command is associated with a request from a user to perform a media search, and wherein the contextual information comprises information about the given media file, the method further comprising:

at the computing equipment, performing the media search using the information about the given media file.

13. The method defined in claim **7** wherein the portable electronic device comprises an electronic device with media playback capabilities, wherein the portable electronic device was being used to playback a given media file when the voice command was received by the portable electronic device, wherein the voice command is associated with a request from a user to perform a search for media files that share a media attribute with the given media file, wherein the contextual information comprises at least one given attribute of the given media file, and wherein the given attribute is selected from the group consisting of: a title, an artist name, an album name, and a genre, the method further comprising:

at the computing equipment, performing a search for media files that share the given attribute with the given media file using the contextual information.

14. The method defined in claim **7** wherein the portable electronic device has a location sensor that is used to determine the location of the portable electronic device, wherein the voice command is associated with a request from a user to perform a search for retail establishments that are located within a given distance of the location of the device, and wherein the contextual information comprises the location of the device, the method further comprising:

at the computing equipment, performing the search for retail establishments using the location of the device; and

generating a list of retail establishments that are located within the given distance of the location of the device.

15. A method for processing a voice command using a portable electronic device, wherein contextual information is associated with an operational state of the portable electronic device, the method comprising:

at the portable electronic device, processing the voice command using a speech recognition engine to determine which portion of the contextual information is relevant to the voice command.

16. The method defined in claim **15** wherein the contextual information is associated with the state of the portable electronic device when the voice command is received by the portable electronic device, the method further comprising:

at the portable electronic device, storing the portion of the contextual information that is relevant to the voice command.

17. The method defined in claim **15** wherein the contextual information is associated with the state of the portable electronic device when the voice command is received by the portable electronic device, the method further comprising:

transmitting the voice command and the portion of the contextual information that is relevant to the voice command to computing equipment.

18. The method defined in claim **17** further comprising:

at the computing equipment, processing the voice command and the portion of the contextual information that is relevant using an additional speech recognition engine.

19. The method defined in claim **15** wherein the voice command comprises a request from a user to perform a search and wherein processing the voice command and the portion of the contextual information that is relevant comprises performing the search using the portion of the contextual information that is relevant.

* * * * *