Maintenance Manual

EDACS®

C3 MAESTRO™ CONSOLE SYSTEM WITH ENHANCED AUDIO ENCLOSURE

TABLE OF CONTENTS

INSTALLATION AND SET-UP LBI-39101
I/O BACKPLANE BOARD LBI-39102
AUDIO SYSTEM BOARD..... LBI-39103
SPEAKER KITS AND ASSEMBLIES..... LBI-39104

ERICSSON

CREDITS

EDACS is a registered trademark of Ericsson Inc.
C3 Maestro is a trademark of Ericsson Inc.
Hewlett-Packard and HP are registered trademarks of Hewlett-Packard Company.
IBM is a registered trademark of International Business Machines Corporation.
PC-AT is a trademark of International Business Machines Corporation.
MS-DOS is a registered trademark of Microsoft Corporation.

NOTICE!

This manual covers Ericsson and General Electric products manufactured and sold by Ericsson Inc.

NOTICE!

Repairs to this equipment should be made only by an authorized service technician or facility designated by the supplier. Any repairs, alterations or substitution of recommended parts made by the user to this equipment not approved by the manufacturer could void the user's authority to operate the equipment in addition to the manufacturer's warranty.

NOTICE!
The software contained in this device is copyrighted by Ericsson Inc. Unpublished rights are reserved under the copyright laws of the United States.

This manual is published by **Ericsson Inc.,** without any warranty. Improvements and changes to this manual necessitated by typographical errors, inaccuracies of current information, or improvements to programs and/or equipment, may be made by **Ericsson Inc.,** at any time and without notice. Such changes will be incorporated into new editions of this manual. No part of this manual may be reproduced or transmitted in any form or by any means, electronic or mechanical, including photocopying and recording, for any purpose, without the express written permission of **Ericsson Inc.**

Copyright© March 1995, Ericsson Inc.

TABLE OF CONTENTS

	Page
SPECIFICATIONS	**3**
INTRODUCTION	7
DESCRIPTION	**7**
PERSONAL COMPUTER	**7**
Video Display Monitor ("CRT")	7
Standard PC Keyboard	9
CEC/IMC Serial Link	9
Enhanced Audio Enclosure Serial Link	9
DISPATCH KEYBOARD ("CUSTOM KEYBOARD")	**9**
ENHANCED AUDIO ENCLOSURE	**10**
Enhanced Audio Enclosure Contrast From Earlier Design Audio Tower	10
Case Assembly	10
Power Supply	11
I/O Backplane Board	11
Audio System Board	11
SPEAKERS KITS AND ASSEMBLIES	**12**
CALL DIRECTOR PATCH	**13**
OPERATING PROCEDURES	**13**
INSTALLATION AND SET-UP	**13**
MAINTENANCE	**13**
DISASSEMBLY INSTRUCTIONS	**13**
Enhanced Audio Enclosure	13
Speaker Assembly	14
OUTLINE DIAGRAM	
C3 MAESTRO CONSOLE SYSTEM	**15**
Parts List	15
ASSEMBLY DIAGRAM	
ENHANCED AUDIO ENCLOSURE	**16**
Parts List	17
INSTALLATION INSTRUCTIONS	
ENHANCED AUDIO ENCLOSURE RACK-MOUNT KIT; OPTIONAL	**18**

SPECIFICATIONS *

GENERAL

AC Power Operating Voltage	100 – 240 Vac (automatic 115/230 Vac selection)
AC Power Operating Frequency	47 – 63 Hz
AC Power Consumption	
Complete Console System	375 watts maximum
Enhanced Audio Enclosure & Speakers	80 watts maximum
Personal Computer System	(See manufacturer's specifications)
Temperature Range (ambient air temperature)	
Operating	50° to 104° Fahrenheit (10° to 40° Celsius)
Storage	-30° to 122° Fahrenheit (-34° to 50° Celsius)

Motorola Solutions, Inc., Ex1015, p. 3

Relative Humidity (Enhanced Audio Enclosure only)	
Operating	20% to 80%, non-condensing
Storage	10% to 90%, non-condensing
Dimensions (height x width x depth; approximate)	
Enhanced Audio Enclosure	3.25 x 15 x 9.8 inches (8.26 x 38.10 x 24.98 cm)
Speakers	
Desk-Top (less volume knob)	6.38 x 6.25 x 3.69 (16.3 x 15.8 x 9.3 cm)
Rack-Mount (less volume knob)	5.25 x 19 x 3.38 (13.34 x 48.26 x 8.59 cm)
Personal Computer System	(See manufacturer's specifications)
Rack-Mount Height; Optional (EIA 19-Inch std.)	
Enhanced Audio Enclosure	2 rack units (3.5 inches / 8.89 cm)
Rack-Mount Speaker	3 rack units (5.25 inches / 13.34 cm)
Weight (approximate)	
Enhanced Audio Enclosure	11.7 lbs. (5.31 Kg)
Enhanced Audio Enclosure w/ Rack Mount Option	14.0 lbs. (6.35 Kg)
Speakers	
Desk-Top	2.1 lbs. (0.95 Kg)
Rack-Mount with two Speaker Assemblies	4.2 lbs. (1.91 Kg)
Cabling	6.0 lbs. (2.72 Kg)
Personal Computer System	(see manufacturer's specifications)
Enhanced Audio Enclosure Case Construction	0.060-inch sheet metal construction capable of supporting up to 80 pounds (36.3 kilograms) when free-standing on a flat surface (not rack mounted)
REGULATORY	
Power Supply Safety and Performance	
115 Vac Operation	Meets ANSI/UL 1950 and CSA C22.2 No. 950-M89 requirements
230 Vac Operation	Meets EN 60950-1992 and BS 7002 requirements
Leased Line Interface	Meets UL 1459, IEC 950, EN 60950 and BS 7002 requirements
Radio Frequency Interference (RFI)	Meets requirements of FCC Part 15 and EN 55022 for Class A equipment
Electro-Magnetic Immunity (EMI)	Meets IEC 801 Parts 2, 3 and 4 for ESD, radiated RF immunity and power line bursts respectively
CONTROL DATA LINKS	
CEC/IMC ⇔ Personal Computer (PC)	9.6k or 19.2k baud RS-232 or RS-422 full-duplex serial connection between the console's Personal Computer (PC) and the Console Interface Module (CIM) within the CEC/IMC. Full-duplex 4-wire data modems may be employed between the PC and CIM in a remote console installations.
Personal Computer ⇔ Enhanced Audio Enclosure	9600 baud RS-232 full-duplex serial connection
Enhanced Audio Enclosure ⇔ Optional Equipment	RS-422 serial I/O port provided at rear panel of Enhanced Audio Enclosure for control data interfacing to optional equipment (for future expansion use)
AUDIO INPUTS	
Microphones	
Supervisor and Operator Headsets	Inputs for two simulated carbon telephone-style headset microphones similar to Plantronics model HS-0309-1. Approx. input impedance = 150 ohms. Typical input = 100 mV rms (-12 dBm). Nominal input range = -18 to -6 dBm. ALC controlled. DC mic bias = 3.0 ±0.5 Vdc with 50-ohm load.

Motorola Solutions, Inc., Ex1015, p. 4

Desk Mic	Input for an electret-type microphone similar to part number 19C851086P10 or P11. Approx. input impedance = 600 ohms. Typical input = 70 mV rms (-21 dBm). Nominal input range = -27 to -15 dBm. ALC controlled. DC mic bias = 3.7 ±0.5 Vdc with 1000-ohm load.
Boom or Gooseneck Mic	Input for a dynamic microphone similar to Shure Bros. model VR300 (part number 19C337100P1). Approx. input impedance = 10K ohms. Typical input = 5 mV rms (-56 dBm). Nominal input range = -68 to -44 dBm. ALC controlled. No dc mic bias present.
Line 1, 2, 3 & 4	Balanced 2-wire 600-ohm inputs each designed to receive voice bandwidth audio from one pair of a 4-wire 600-ohm twisted-pair transmission system provided by the CEC/IMC. Transformer isolated. Typical input = 436 mV rms (-5 dBm). Nominal input range = -20 to +10 dBm. Ground isolation = greater than 1500 Vdc.
Call Director Patch	Balanced 2-wire 600-ohm input designed to accept audio from a Call Director device similar to Plant Equipment model 3780-L1-TT-010. Transformer isolated. Typical input = 78 mV rms (-20 dBm). Nominal input range = -26 to -14 dBm.
Paging Encoder	Balanced 2-wire 600-ohm input designed to accept audio from a paging tone encoder or similar device. Typical input = 436 mV rms (-5 dBm). Nominal input range = -11 to +1 dBm. Ground isolation = greater than 1500 Vdc.
OTHER INPUTS	
Microphone PTT And Monitor Switch	Active-low inputs used to detect "dry-contact" switch closures of the type found in standard microphones, footswitches and headset jacks. Typical open-circuit voltage = 12 Vdc. Max. open-circuit voltage = 16 Vdc. Max. short-circuit current = 30 mA. Low-pass filtering prevents undesirable signals such as switch contact bounce or static charges from triggering microcontroller circuits; typical microcontroller response time = input must be valid for greater than 5 milliseconds.
Microphone Sense	Active-low inputs used to sense the connection of a microphone. Typical open-circuit voltage = 12 Vdc. Max. open-circuit voltage = 16 Vdc. Max. short-circuit current = 30 mA. Low-pass filtering prevents undesirable signals such as switch contact bounce or static charges from triggering microcontroller circuits; typical microcontroller response time = input must be valid for greater than 5 milliseconds.
Page PTT	Active-low input used to signal presence of paging signal on paging audio input. Typical open-circuit voltage = 12 Vdc. Max. open-circuit voltage = 16 Vdc. Max. short-circuit current = 30 mA. Low-pass filtering prevents undesirable signals such as switch contact bounce or static charges from triggering microcontroller circuits; typical microcontroller response time = input must be valid for greater than 5 milliseconds.
Call Director Hook Sense & Jack Sense	Single-ended logic inputs used to sense CD off-hook and handset connection status. Each internally pulled to +12 Vdc via 470-ohm resistor.

Motorola Solutions, Inc., Ex1015, p. 5

AUDIO OUTPUTS	
Earphones	
Supervisor and Operator Headsets	Outputs for telephone-style headset earphones similar to Plantronics model HS-0309-1 or ACS model XW/AT. Approx. output impedance = 300 ohms. Unbalanced. Typical output level = 100 mV rms. (-15 dBm). Nominal output range = -21 to -9 dBm. Sidetone provided.
Speakers	
Select and Unselect(s)	Typical Enhanced Audio Enclosure output level to Speaker Assembly = 436 mV rms (-5 dBm). Maximum speaker audio output power = 2 or 5 watts; selectable via internal switch at each Speaker Assembly. Each Speaker Assembly is equipped with a volume control. Minimum volume level provided; enable/disable switch provided at each Speaker Assembly. Maximum number of unselect speakers = 3.
Line 1, 2, 3 & 4	Balanced 2-wire 600-ohm outputs each designed to transmit voice bandwidth audio to one pair of a 4-wire 600-ohm twisted-pair transmission system provided by the CEC/IMC. Transformer isolated. Typical output = -5 dBm. Nominal output range = -20 to +10 dBm. Ground isolation = 1500 Vdc and greater than 5M ohms.
Call Director Patch	Balanced 2-wire 600-ohm output designed to deliver audio to a Call Director device similar to Plant Equipment model 3780-L1-TT-010. Typical output = -5 dBm. Nominal output range = -11 to +1 dBm.
Select & Unselect Recorders	Unbalanced outputs each designed to drive audio inputs of an external recording device. Approx. output impedance = 350 ohms. Capacitively coupled. Typical output = -5 dBm. Nominal output range = -8 to -2 dBm.
AUDIO INPUTS AND OUTPUTS	
Total Harmonic Distortion	Less than 1% from 300 to 3000 Hz
Hum and Noise	Less than or equal to -55 dB at 1 kHz
Crosstalk	Less than or equal to -55 dB at 1 kHz
Level Adjustment	All audio input and output levels adjustable via digital potentiometers using application program running on PC
RELAY CONTACT OUTPUTS	
Standard	Form-C (SPDT dry contacts) relay connections isolated from ground and all other signals. One relay activates on console PTTs. Two others are activated via reserved keystrokes at the Dispatch Keyboard. Contact rating = 0.75 amps at 26 Vdc. Ground isolation = 500 Vrms (60 Hz). Open contact isolation = 500 Vrms (60 Hz).
Call Director On-Hook	Form-A (SPST normally-open dry contacts) relay connections isolated from ground and all other signals. Activates (closes) when console disconnects CD from CEC/IMC. Contact rating = 0.75 amps at 26 Vdc. Ground isolation = 500 Vrms (60 Hz). Open contact isolation = 500 Vrms (60 Hz).

* These specifications are intended primarily for the use of the serviceman. See the appropriate Specifications Sheet for complete specifications.

Motorola Solutions, Inc., Ex1015, p. 6

INTRODUCTION

The EDACS® C3 Maestro™ console system is a state-of-the-art CRT-based dispatch console system designed to interface to an EDACS® CEC/IMC Digital Audio Switch. Equipped with an Enhanced Audio Enclosure, the C3 Maestro™ provides advanced console dispatch features for EDACS radio system networks. The complete system consists of:

- an IBM® PC-AT™ compatible Personal Computer (PC) system running MS-DOS® operating system software and custom C3 Maestro application software developed by Ericsson Inc., a color video display monitor ("CRT") and a standard PC keyboard
- a Dispatch Keyboard (sometimes referred to as the "Custom Keyboard")
- an Enhanced Audio Enclosure which provides audio conditioning, routing and amplification functions for the console's audio signals, and interface/control of external devices such the Dispatch Keyboard and for example, if the console is so equipped, a Call Director (optional equipment) for telephone patch operations
- desk-top or rack-mounted speakers (typically two – one "select" and one "unselect")
- other optional accessories such as headsets, microphones and footswitches
- cabling which interconnects the Enhanced Audio Enclosure to the PC and speakers
- cabling which interconnects the Enhanced Audio Enclosure and the PC to the CEC/IMC (control data and audio links; 100-foot cables supplied)
- if the console is a remote console (not co-located with the CEC/IMC), optional data modem equipment for the CEC/IMC ⇔ C3 Maestro control data link is required

NOTE

Refer to LBI-38662 for a complete description of the EDACS CEC/IMC Digital Audio Switch.

The C3 Maestro console's video display monitor ("CRT") and keyboard replace the array of controls and indicators found on traditional modular/desktop-type consoles. Standard console-type headsets, microphones, and footswitches can be connected to the C3 Maestro. Also, a variety of other external inputs and outputs are supported from items such as a pager, call-check recorders and Call Director telephone patch equipment.

Using the C3 Maestro console, a dispatcher can monitor and communicate with a large number of personnel on the EDACS CEC/IMC wide area network. Just like an EDACS mobile or portable radio, each EDACS C3 Maestro console is assigned a unique logical ID (LID) number. A typical C3 Maestro console installation is shown in the outline diagram on page 15.

The PC's video display monitor displays graphical representations of the radios being monitored or controlled by the dispatcher. Using the Dispatch Keyboard, a dispatcher can issue commands to control receive and transmit audio signal routing between the CEC/IMC and audio devices connected to the C3 Maestro such as microphones and speakers. The C3 Maestro application software program running on the PC in-turn controls circuitry inside the Enhanced Audio Enclosure. This is accomplished via an RS-232 serial link between the PC and the Enhanced Audio Enclosure.

DESCRIPTION

PERSONAL COMPUTER

The PC within the C3 Maestro console system provides most computer processing functions for the console. Software includes the Microsoft's MS-DOS® operating system and a custom C3 Maestro application program developed by Ericsson Inc. This custom program automatically starts when the computer is "booted". PC components also include the video display monitor ("CRT") and a standard PC keyboard.

Video Display Monitor ("CRT")

The PC's video display monitor provides all visual dispatch control indications to the operating dispatcher. This color monitor is typically of a VGA or super-VGA resolution. Basic screen layout is shown in Figure 1. Screen areas include:

- **Module Display Area** – Fourteen (14) communication modules are displayed at all times in the upper portion of the screen. Each module provides instant communication access to a talk group, an individual unit, a conventional channel, or another console. Eight (8) pages of fourteen (14) modules are available for a total of 112 unique communication modules. Each module can be programmed by the console operator.

Motorola Solutions, Inc., Ex1015, p. 7

maintained by the CEC/IMC Manager (MOM PC). Therefore, all CEC/IMC consoles' clocks are synchronized to the CEC's/IMC's time thus providing consistent time displays at all consoles.

Standard PC Keyboard

During dispatch operations, the standard PC keyboard is not used. However, during the console set-up process, access to this keyboard is required for basic file management, configurations and maintenance operations. This keyboard is also used to exit and re-execute the C3 Maestro's application program if/when additional configuration, diagnostic and/or maintenance procedures are required.

CEC/IMC Serial Link

Normally, a C3 Maestro console system equipped with an Enhanced Audio Enclosure uses the PC's COM1 serial port for control data interfacing to the Console Interface Module (CIM) within the CEC/IMC Digital Audio Switch. This serial data link can be wired for RS-232 (3-wire) or RS-422 (4-wire) operation. Typically, a C3 Maestro is co-located with the CEC/IMC and wired for RS-422 operation at 19,200 baud. In a co-located installation, console ⇔ CIM serial control data links up to 4000 feet (1219 meters) in length may be employed if RS-422 interfacing is utilized.

If the console is not co-located with the CEC/IMC, full-duplex 4-wire data modems and dedicated 4-wire data grade phone lines (or equivalent) may be employed between the CEC/IMC and the remote C3 Maestro console. In an installation of this type, both the local serial link at the console (PC's COM1 port ⇔ console's modem) and the local serial link at the CEC/IMC (CIM ⇔ CIM's modem) are typically wired via RS-232 hook-ups. Normally, these RS-232 links are configured for 9600 baud operation.

Detailed console ⇔ CEC/IMC wiring and configuration information is contained within the *Installation And Set-Up* manual, LBI-39101. LBI-39101 is included with this manual set.

Enhanced Audio Enclosure Serial Link

In most cases, the PC's COM2 serial port is used for control data communications between the PC and the Enhanced Audio Enclosure. This serial port is wired for RS-232 operation at 9600 baud. Control data transferred over this duplex serial link includes Enhanced Audio Enclosure-to-PC messages such as Dispatch Keyboard keystrokes and VU meter data, and PC-to-Enhanced Audio Enclosure messages such as start-up initialization commands, recorder audio switching, and Call Director audio switching. See the *Installation And Set-Up* manual, LBI-39101 for wiring and configuration information.

DISPATCH KEYBOARD ("CUSTOM KEYBOARD")

The C3 Maestro's specially designed Dispatch Keyboard provides tactile feedback button operation for dispatch speed equal to a modular-type console. In addition, the keyboard provides easy control for the advanced features of the C3 Maestro console. Keys with similar functions are grouped together and the most frequently used key groups

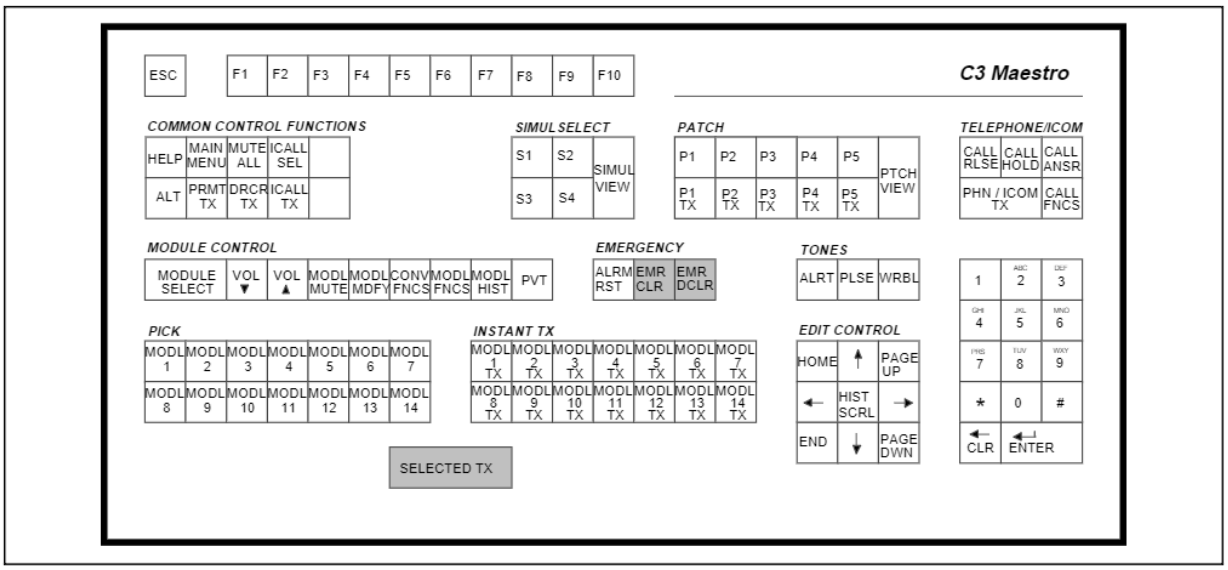

Figure 2 − C3 Maestro Dispatch Keyboard

Motorola Solutions, Inc., Ex1015, p. 9

are located near the bottom of the keyboard for quick and easy access. For example, transmit and module pick keys are at the bottom. Seldom used keys are located near the top of the keyboard. Key groups include:

- a selected transmit (PTT) key
- fourteen (14) module pick keys
- fourteen (14) instant module transmit keys
- nine (9) module control keys
- three (3) emergency keys
- nine (9) edit control keys
- three (3) tone keys
- a numeric keypad (telephone style)
- eight (8) common control function keys
- five (5) simulselect keys
- eleven (11) patch keys
- five (5) telephone/intercom keys
- ten (10) function keys and an escape key

ENHANCED AUDIO ENCLOSURE

The C3 Maestro's Enhanced Audio Enclosure contains all audio interface, audio routing and Dispatch Keyboard interface circuitry for the console system. Basically, the unit consists of:

- a metal case assembly
- an ac-to-dc power supply located inside the case
- an I/O Backplane Board located inside the case
- an Audio System Board located inside the case
- operating firmware which is part of the Audio System Board
- 19-inch EIA rack-mount hardware (optional)

Case Assembly

The Enhanced Audio Enclosure's case provides housing for all major components within the unit. As shown in the assembly diagram in this manual (page 16) the Enhanced Audio Enclosure's case assembly basically consists of a lower steel frame assembly which includes the rear panel, a upper steel frame (top cover), a molded plastic front panel and miscellaneous assembly hardware. The case is constructed with heavy-gauge sheet metal so heavy items such as the console's video display monitor can be placed on its top without causing case distortion.

Enhanced Audio Enclosure Contrast From Earlier Design "Audio Tower"

Earlier-design C3 Maestro console systems utilized an audio unit referred to as the "Audio Tower". When compared to the Audio Tower, the Enhanced Audio Enclosure provides additional features in a neater package than the earlier-design Audio Tower. In addition, the Enhanced Audio Enclosure is considerably smaller and more durable than the Audio Tower. This size reduction eases installation space requirements which, in many installations, reduces system costs when compared to a C3 Maestro console equipped with an Audio Tower.

An optional rack-mount hardware kit is available which allows installation of the Enhanced Audio Enclosure into a standard 19-inch rack-mount cabinet or case. The Audio Tower was not rack mountable. Speakers used with the Enhanced Audio Enclosure may also be rack mounted.

As previously stated, the Enhanced Audio Enclosure utilizes an RS-232 serial control data link between it and the PC. This is in contrast to the earlier Audio Tower design which utilized a specialized Logic Board within the PC and a large, bulky interconnect cable between the Logic Board and the Audio Tower. This Logic Board-to-Audio Tower interface was parallel, not serial.

The specialized Dispatch Keyboard ("custom keyboard") used with the C3 Maestro console system operates on a serial data link. A C3 Maestro console equipped with an Audio Tower utilized a serial port at the Logic Board for Dispatch Keyboard interfacing. A C3 Maestro console equipped with an Enhanced Audio Enclosure utilizes a serial port provided by the Enhanced Audio Enclosure.

For complete information on an earlier C3 Maestro console system equipped with an Audio Tower, refer to maintenance manual LBI-39062 or LBI-38715.

Motorola Solutions, Inc., Ex1015, p. 10

Assemblies inside the case include the I/O Backplane Board mounted on the rear panel, the power supply unit mounted to the bottom of the case, and the Audio System Board. With the top cover removed, the Audio System Board slides into and out of the case between two (2) plastic printed circuit board guides attached to the left and right inner sides of the case. When fully-inserted, rectangular 96-pin DIN-type connectors on the Audio System Board mate with 96-pin DIN connectors on the I/O Backplane Board.

All cable interconnections to and from external equipment are made via connectors at the Enhanced Audio Enclosure's rear panel. Openings in the rear panel expose the I/O Backplane Board's connectors so they may be mated with connectors on the cables to and from external equipment. For example, the desk mic's cable is equipped with a male DB-9 connector which mates with a female DB-9 connector labeled "DESK MIC" at the Enhanced Audio Enclosure's rear panel. This female DB-9 connector is J5 on the I/O Backplane Board.

As previously mentioned, the Enhanced Audio Enclosure may be rack mounted in a standard 19-inch cabinet or case. An optional rack-mount kit is required. When rack-mounted, the Enhanced Audio Enclosure occupies two (2) vertical rack units or 3.5 inches.

Power Supply

As shown in the assembly diagram (page 16), the power supply is mounted to the bottom of the Enhanced Audio Enclosure's case. It converts ac line power (nominal 115 Vac or 230 Vac, 50/60 Hz) to regulated 12 Vdc power for use by the Audio System Board and the attached Speaker Assemblies. The supply is ***not*** a field-serviceable unit.

The ac on/off power switch is located on the Enhanced Audio Enclosure's rear panel just above the detachable IEC-320 type ac power cord connector. As viewed from the back of the case, this switch and connector are located on the left-hand side of the Enhanced Audio Enclosure's rear panel.

A two-wire power cable between the power supply and the I/O Backplane Board delivers twelve-volts dc (12 Vdc) power to the I/O Backplane. The I/O Backplane Board distributes this dc power to the Audio System Board via the 96-pin DIN interconnections and to its four (4) DB-9 speaker connectors at the Enhanced Audio Enclosure's rear panel. Consequently, the power supply unit within the Enhanced Audio Enclosure supplies dc operating power to Speaker Assemblies connected to the Enhanced Audio Enclosure. As described later in this manual and in LBI-39104, this dc power is utilized by the audio power amplification circuitry within the Speaker Assembly.

I/O Backplane Board

Inside the Enhanced Audio Enclosure, the I/O Backplane Board is vertically-mounted on the enclosure's rear panel. This board is the junction point for all audio interconnections into and out of the Enhanced Audio Enclosure to and from external audio devices. Microphones, headsets, speakers, CEC/IMC audio lines, etc., all terminate at the I/O Backplane Board. In addition other interconnections made at the I/O Backplane Board include control-type connections such as the PC's serial control data link, the Dispatch Keyboard serial link and interconnections to Call Director telephone equipment.

The I/O Backplane Board consists of twenty-one (21) connectors, nineteen (19) of which extend through Enhanced Audio Enclosure's rear panel for external device connections. Of the three (3) internal connectors, two directly mate with the Audio System Board. These two 96-pin rectangular DIN-type connectors carry all audio and control signals between the Audio System Board and the I/O Backplane Board's externally exposed connectors. The remaining internal connector provides dc connections for the power supply located under the Audio System Board. As previously described, the I/O Backplane Board distributes this dc power to the Audio System Board via DIN interconnections. See LBI-39101 and LBI-39102 for I/O Backplane Board connector pin-out and interconnection details.

Audio System Board

The Audio System Board is the heart of the Enhanced Audio Enclosure. It accommodates all audio and logical processing circuitry for the Enhanced Audio Enclosure. Major circuits and functions:

- **Audio Input Circuits** – These circuits provide amplification, filtering and level-adjustment for all audio signals applied to the Enhanced Audio Enclosure's audio inputs. Input signals include mic audio signals, balanced-line audio signals from the CEC/IMC, balance-line audio signals from Call Director equipment, and audio signals from a pager (or similar device).

- **Audio Switching Matrix Circuits** – The audio switching matrix routes or switches conditioned (amplified, filtered, level-adjusted) input audio signals to the appropriate audio output circuits. This matrix consists of ten (10) "cross-point switch" integrated circuits or "chips" which each have an 8 x 8 switch matrix. All console audio signals are routed through the matrix chips. Input audio signals are applied to the "y" side of the

Motorola Solutions, Inc., Ex1015, p. 11

matrix and output signals are sent out from the "x" side. Audio matrix and all other logical circuitry on this board is controlled by the on-board microcontroller circuits.

- **Audio Output Circuits** – Prior to application to the appropriate Enhanced Audio Enclosure output, each audio signal on the output side of the audio matrix (a switched-in signal) is applied to an audio output circuit. Each audio output circuit provides amplification/attenuation, impedance matching and/or level-adjustment in the output path. Output paths include headset earphone audio, low-power speaker audio ("select" and "unselect" audio), balanced-line audio signals to the CEC/IMC, balance-line audio signals to Call Director patch equipment, and single-ended audio signals to call-check recorders.

- **Microcontroller Circuits** – Intel 80C32-based microcontroller circuits on the Audio System Board control and process all logical data signals to and from the Audio System Board's I/O logic circuits. These circuits include (non-inclusive listing) the audio switching matrix, several serial ports, bi-state logical inputs, and bi-state logical outputs. The microcontroller circuits also read the on-board analog-to-digital converter circuits used for VU meter indications.

- **PC Serial Port Circuit** – An RS-232 port for control data communication with the Personal Computer (PC).

- **Dispatch Keyboard Serial Port Circuit** – This serial port receives keystroke data from the Dispatch Keyboard. Operating dc power is also delivered to the Dispatch Keyboard via this serial port.

- **Expansion Serial Port Circuit** – An RS-422 serial port which permits control data interfacing to serially-interfaced external equipment. (Reserved for future use.)

- **Bi-State Logic Input Circuits** – These circuits interface bi-state logical sense lines from external equipment connected to the Enhanced Audio Enclosure to the Audio System Board's microcontroller circuits. Examples include mic PTT sense lines, mic connected/not connected sense lines, Call Director off hook, and Call Director jack sense lines. Each circuit includes a pull-up resistor for the external device and low-pass filtering.

- **Bi-State Logic Output Circuits** – These circuits interface the microcontroller circuits to bi-state logical output devices such as relay contacts. The Audio System Board has a total of seven (7) on-board relays.

- **Analog-to-Digital Converter Circuit** – The analog-to-digital (A/D) converter circuit's primary function is to provide VU (Volume Unit) data on various Enhanced Audio Enclosure audio output signal levels. The microcontroller reads the A/D converter and it sends the read data to the PC via the serial control data link. VU indications are displayed within the system status area on PC's monitor. The A/D converter circuit is also utilized during automated test and alignment procedures.

SPEAKERS KITS AND ASSEMBLIES

Speaker Kits used with the Enhanced Audio Enclosure consist of mechanical hardware, one or more Speaker Assemblies, and cables which interconnect each Speaker Assembly to the Enhanced Audio Enclosure. For a given Enhanced Audio Enclosure, one Speaker Assembly is the "select speaker" and the remaining are the "unselect speakers."

Speaker Kit mechanical hardware may be of several different varieties providing either desktop speaker operation in the form of a self-contained single-speaker case or a rack-mount version in the form of a standard 19-inch EIA rack mount assembly. Normally, rack-mount Speaker Kits are factory equipped with two (2) Speaker Assemblies – one select speaker and one unselect speaker. If additional unselect speakers are required for a given console, up to two additional Speaker Assemblies may be added for a total of four (4) speakers in a 3-rack-unit-high assembly.

NOTE

See the table and parts lists in LBI-39104 for Speaker Kits' contents.

Each Speaker Assembly consists of a high-quality magnetically-shielded speaker, a Speaker Amp Board which accommodates audio power amplification circuitry, a front panel, a panel-mounted volume control potentiometer, and mechanical hardware. This unit may be installed in the desktop case or in the rack-mount frame. Since a magnetically-shielded speaker is employed, this assembly may be located near a video display monitor ("CRT") without causing monitor distortion. The difference between

Motorola Solutions, Inc., Ex1015, p. 12

the select and unselect Speaker Assemblies is front panel labeling.

The Speaker Amp Board is mounted just behind the speaker on long metal stand-offs fastened to the assemblies front panel. It amplifies low-power speaker audio signals from the Enhanced Audio Enclosure and drives the speaker with the amplified signal. It can drive the speaker with up to five (5) watts of audio power. The interconnect cable between the Enhanced Audio Enclosure and the Speaker Assembly delivers both 12 Vdc operating power and the low-power speaker audio to the Speaker Amp Board.

CALL DIRECTOR PATCH

In addition to normal dispatch operations, the C3 Maestro console system can be connected to Call Director (CD) telephone equipment. This feature allows the C3 Maestro to "patch" a telephone line to a specific unit, talk group, conventional channel or radio patch in the CEC/IMC network. See Figure 3.

The term *patch* or *patched,* derived from *phone patch*, is used to convey the CD is connected to the CEC/IMC. A *Call Director patch* should not be confused with a *radio patch* in which a collection of radio talk groups are interconnected for common communications as one group. Radio patches include standard radio patches set-up at consoles and Causeway patches (hard patches) set-up at the CEC/IMC Manager (MOM PC).

Call Director patch operates independently of normal console-to-radio dispatch communications. Using the CD interface, the dispatcher is only required to connect the CD with the target entity (unit, group, etc.). After this operation, no other dispatcher intervention is required until the CD patch must be disconnected.

Audio connections between the CD and the CEC/IMC are accomplished by the Enhanced Audio Enclosure. Microcontroller circuits on the Audio System Board have primary control. The console's application program running on the PC has minimal involvement in the control of CD patch audio switching.

As with other telephone interconnect calls, CD patch calls operate in the message trunked mode. From the standpoint of the radio user, a CD patch operates identically to any other telephone interconnect call.

The console uses a secondary LID (Logical ID) for the patch channel requests, thus allowing CD patch operation to work separately from, and concurrently with, the normal console-to-radio dispatch communications. This LID is referred to as the "Call Director ID".

OPERATING PROCEDURES

Refer to the *C3 Maestro Training Manual* LBI-38660 for complete C3 Maestro console operating details. This manual includes *User Training Study Guide* ECR-4488 and *Administrators Training Manual* ECR-4489.

INSTALLATION AND SET-UP

Refer to maintenance manual LBI-39101 for complete console installation and set-up (configuration) information. LBI-39101 is included with this manual set.

MAINTENANCE

Enhanced Audio Enclosure and Speaker Assembly disassembly instructions follow. Refer to the appropriate maintenance manual included with this manual set for detailed board-level maintenance information. These manuals include board outline and schematic diagrams, parts lists and circuit analysis descriptions:

DISASSEMBLY INSTRUCTIONS

Enhanced Audio Enclosure

Disassemble an Enhanced Audio Enclosure in accordance with the following instructions.

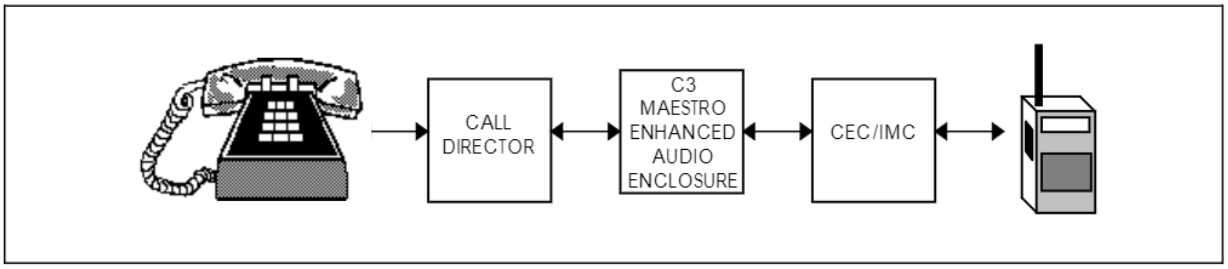

Figure 3 − Basic Call Director Patch Audio Routing

Motorola Solutions, Inc., Ex1015, p. 13

- **Power-down the Enhanced Audio Enclosure by turning the on/off power switch on the back of the unit to the OFF position.**
- **Disconnect the detachable ac power cord from the back of the Enhanced Audio Enclosure.**
- Disconnection of other cables from the back of the Enhanced Audio Enclosure is optional, as the top cover may be removed with these cables connected.
- Lay the unit upside-down on a flat surface with the front panel facing you.
- Using both index fingers, simultaneously depress the two (2) recessed latching buttons on the sides of the unit.
- With the latching buttons fully depressed, slide the bottom of the unit approximately one (1) inch by pushing the two (2) rubber feet nearest the front panel ***away from*** the front panel.
- Carefully return the unit to an upright position. Use caution as the top cover and front panel assembly may easily separate (slide) from the bottom assembly at this time.
- Remove the top cover and front panel assembly away from the bottom assembly by sliding the two assemblies apart.
- Refer to LBI-39103 for Audio System Board service information. Refer to LBI-39102 for I/O Backplane Board service information. The power supply is a non-serviceable unit; it should be replaced in whole if a failure occurs.

Speaker Assembly

Disassemble a Speaker Assembly in accordance with the following instructions.

- If necessary, disconnect the Speaker Assembly from the Enhanced Audio Enclosure by unplugging the cable at the rear of the Speaker Assembly. If tightened, the cable's DB-9 connector securing screws may need to be loosened using a small screwdriver.
- If the Speaker Assembly is a desktop version, disassemble it to gain access to the Speaker Amp Board as follows: Remove the four (4) screws from the back of the case and separate the case's front and rear sections.
  - If the Speaker Assembly is a rack-mount version, removal of the assembly from the rack-mount frame is recommended: Remove the screws that secure the Speaker Assembly to the rack-mount frame.
- Refer to LBI-39104 for service information.

Motorola Solutions, Inc., Ex1015, p. 14

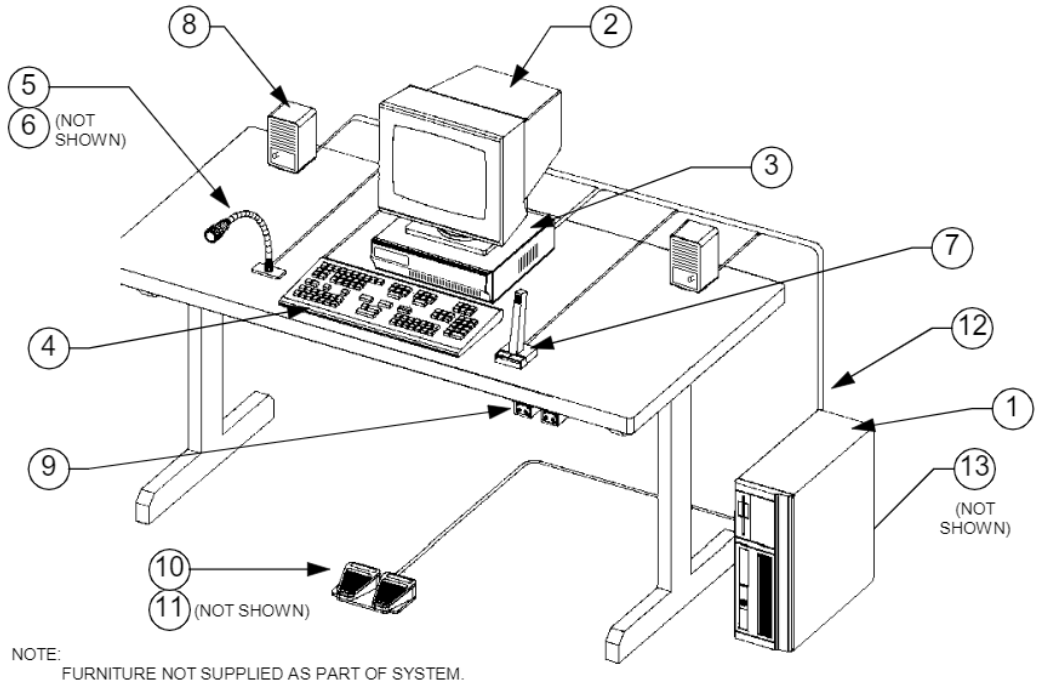

NOTE:
FURNITURE NOT SUPPLIED AS PART OF SYSTEM.

C3 MAESTRO CONSOLE SYSTEM WITH ENHANCED AUDIO ENCLOSURE

(Made from 903-0001-000 Rev. 0)

C3 MAESTRO CONSOLE SYSTEM
WITH ENHANCED AUDIO ENCLOSURE
P29/7720045009 (350A1371P1) ERICSSON - 2 DESKTOP SPKRS.
P29/7720045010 (350A1371P2) ERICSSON - 4 DESKTOP SPKRS.
ISSUE 1

ITEM	PART NUMBER	DESCRIPTION
1	P29/7720046000 (350A1371P11)	Personal Computer, C3 Maestro: Includes RS-422/485 board, DOS 6.x and C3 Maestro application software installed. Less monitor. Not upgradeable to NT.
1	P29/7720046001 (350A1371P12)	Personal Computer, C3 Maestro: Includes RS-422/485 board, DOS 6.x and C3 Maestro application software installed. Less monitor. Upgradeable to NT. (Optional equipment NOT included with P29/7720045009 or P29/7720045010. Listed here for reference only.)
2	P29/7590287000 (350A1371P14 or 344A3927P37)	Monitor: 14-inch VGA.
2	P29/7590297000 (350A1371P15)	Monitor: 17-inch SVGA. (Optional equipment NOT included with P29/7720045009 or P29/7720045010. Listed here for reference only.)
3	P29/7720040001 (350A1371P4)	Enhanced Audio Enclosure: Ericsson; Includes Item 12 cable.
3	P29/7720040000 (350A1371P3)	Enhanced Audio Enclosure: GE; Includes cable Item 12 cable. (NOT included with P29/7720045009 or P29/7720045010. Listed here for reference only.)
4	P29/7590182003 (350A1371P17)	Keyboard, Dispatch: with DB-9 connector.
5	CRMC3F	Microphone, Gooseneck.(Optional equipment NOT included with P29/7720045009 or P29/7720045010. Listed here for reference only.)
6	CRMC3E	Microphone, Boom.(Optional equipment NOT included with P29/7720045009 or P29/7720045010. Listed here for reference only.)
7	CRMC3D	Microphone, Desk.(Optional equipment NOT included with P29/7720045009 or P29/7720045010. Listed here for reference only.)
8	(See LBI-39104)	Speaker, Desktop. (Rack-mount speakers are optional and they are not shown in diagram; see LBI-39104.)
9	CRCN1W	Jack Box, Headset.(Optional equipment NOT included with P29/7720045009 or P29/7720045010. Listed here for reference only.)
10	CRSU3C	Footswitch, Dual.(Optional equipment NOT included with P29/7720045009 or P29/7720045010. Listed here for reference only.)
11	CRSU3B	Footswitch, Single (not shown in diagram).(Optional equipment NOT included with P29/7720045009 or P29/7720045010. Listed here for reference only.)
12	P29/5010150000 (344A1371P29)	Cable: 10-foot, male DB-9-to-female DB-9. (Used for speaker and PC-to-EAE interconnections.)
12	19B804083P2	Cable: 100-foot (Used for Console-to-CEC/IMC audio interconnections).
12	19B804083P3	Cable: 100-foot (Used for Console-to-CEC/IMC RS-422 control data interconnections).
13	P29/7590289000 (350A1371P30)	RS-422/485 Board (ESD protected).

Motorola Solutions, Inc., Ex1015, p. 15

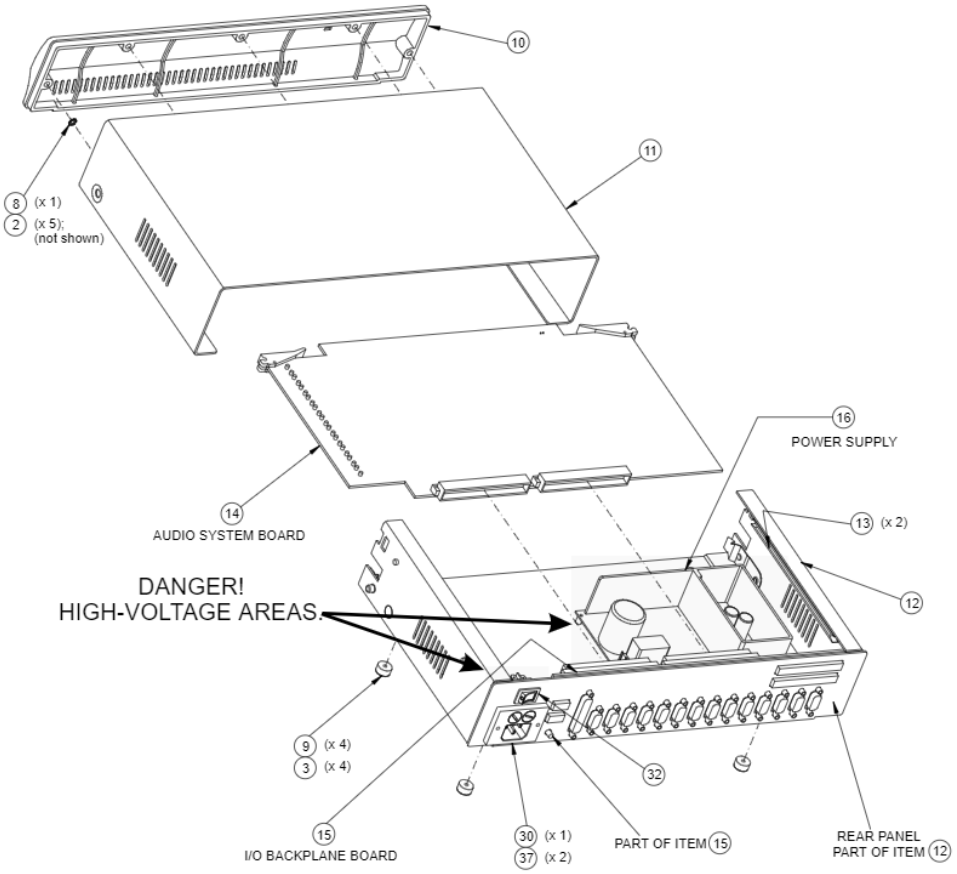

POWER SUPPLY INTERCONNECTIONS

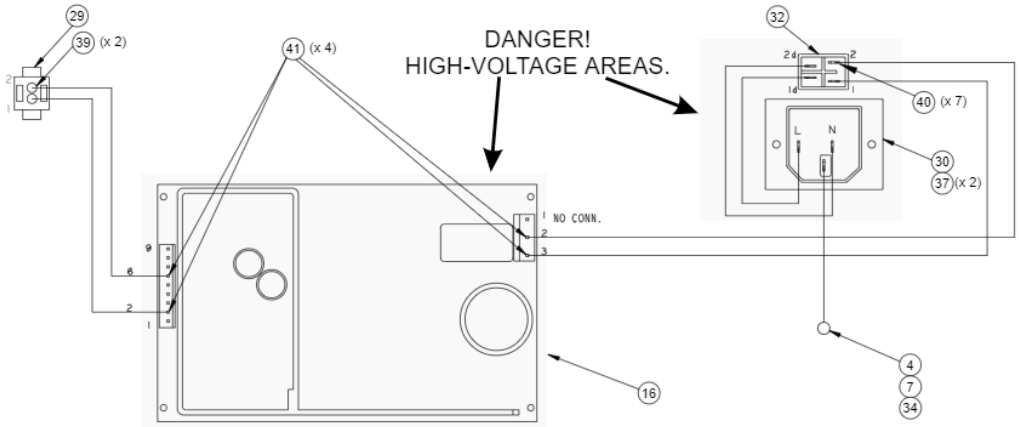

ENHANCED AUDIO ENCLOSURE
P29/7720040000 & P29/7720040001

(Made From 772-0040-XXX-HD, Rev. A)

Motorola Solutions, Inc., Ex1015, p. 16

ENHANCED AUDIO ENCLOSURE
P29/7720040001 (350A1371P4) ERICSSON
P29/7720040000 (350A1371P3) GE

ISSUE 1

ITEM	PART NUMBER	DESCRIPTION
1	P29/2A104C2404	Screw, machine: 4-40 x 1/4-inch, pan head Phillips. (Qty. required = 4)
2	P29/2A106C2403	Screw, machine: 6-32 x 3/16-inch, pan head Phillips. (Qty. required = 5)
3	P29/2A106C2404	Screw, machine: 6-32 x 1/4-inch, pan head Phillips. (Qty. required = 9)
4	P29/2A104C2402	Screw, machine: 4-40 x 1/8-inch, pan head Phillips. (Secures ground wire.)
5	P29/208A104020	Washer, lock: No. 4, spring, stainless steel. (Qty. required = 4)
6	P29/208A106020	Washer, lock: No. 6, spring, stainless steel. (Qty. required = 5)
7	P29/2080106000	Washer, lock: No. 4, internal tooth, stainless steel. (Qty. required = 3)
8	P29/2080028000	Washer, lock: No. 6, external tooth.
9	P29/6110101000	Feet, rubber. (Qty. required = 4)
10	P29/6050030000	Panel, front: molded.
11	P29/6090546000	Enclosure, top.
12	P29/6090547000	Enclosure, bottom.
13	P29/6110100000	Guides, PCB: 6-inch (Qty. required = 2)
14	(See LBI-39103 for part number)	Board, Audio System.
15	(See LBI-39102 for part number)	Board, I/O Backplane.
16	P29/3860036000	Supply, Power: 12 Vdc @ 4.3 amp output.
17	P29/6140231001	Label, Ericsson.
17	P29/6140231000	Label, GE.
29	P29/3800133000	Connector: 2-position plug.
30	P29/3800188000	Receptacle: Fused IEC.
32	P29/3650049000	Switch, rocker: Lighted green.
34	P29/3710088000	Terminal, ring: No. 6 stud, 18-14 AWG.
35	P29/2010116000	Screw, machine: 4-40 x 1/4-inch, flat head Phillips, stainless steel. (Qty. required = 2)
36	P29/2070073000	Nut, keeper: No. 4. (Qty. required = 2)
37	P29/3250077000	Fuse: 2.5 amp slow-blow, 5 x 20 mm. (Qty. required = 2)
38	P29/3820021000	Cord, ac power: Right-angle IEC-320.
39	P29/3710007000	Terminal. (Qty. required = 2)
40	P29/3250003000	Terminal, quick disconnect: 0.187-inch. (Qty. required = 7)
41	P29/1050034000	Tubing, heat shrink: 1/8-inch x 0.75-inch (Qty. required = 4)
42	P29/5010150000 (350A1371P29)	Cable: DB-9 male/DB-9 male, 10-feet. (Used for PC-to-EAE control data link.)

Motorola Solutions, Inc., Ex1015, p. 17

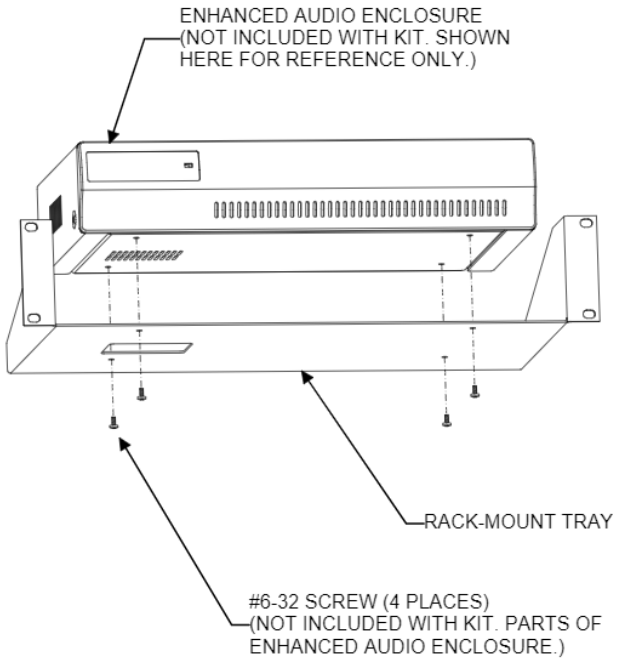

INSTALLATION INSTRUCTIONS

1. MOUNT TRAY (P29/6090561000) IN 19-INCH CABINET OR CASE USING FOUR (4) #10-24 x 3/4 PHILLIPS PAN-HEAD SCREWS (P29/2040011000), FOUR (4) #10 LOCK-WASHERS (P29/2080005000), AND FOUR (4) #10 SPRING NUTS (P29/2070098000). THESE ITEMS ARE NOT SHOWN IN DIAGRAM.
2. REMOVE THE FOUR (4) #6-32 PHILLIPS-HEAD SCREWS SECURING THE RUBBER FEET TO THE BOTTOM OF THE ENHANCED AUDIO ENCLOSURE. RETAIN THESE SCREWS. DISCARD RUBBER FEET UNLESS REVERSION BACK TO DESK-TOP USE MAY BE NECESSARY IN FUTURE.
3. MOUNT THE ENHANCED AUDIO ENCLOSURE TO THE TRAY USING FOUR (4) SCREWS REMOVED IN STEP 2.

ENHANCED AUDIO ENCLOSURE RACK-MOUNT KIT; OPTIONAL
P29/7720044000 (350A1371P19)
(772-0044-XXX-HD)

Ericsson Inc.
Private Radio Systems
Mountain View Road
Lynchburg, Virginia 24502
1-800-528-7711 (Outside U.S.A., 804-528-7711)

Printed in U.S.A.