UNITED STATES PATENT AND TRADEMARK OFFICE

BEFORE THE PATENT TRIAL AND APPEAL BOARD

MOTOROLA SOLUTIONS, INC.,

Petitioner,

v.

STA GROUP LLC,

Patent Owner.

IPR2023-01292
U.S. Patent No.: 7,324,802 B2

DECLARATION OF DAVID HILLIARD WILLIAMS IN SUPPORT OF PETITION FOR *INTER PARTES* REVIEW OF CLAIMS 1-21 OF U.S. PATENT NO. 7,324,802 B2

TABLE OF CONTENTS

Page

I. INTRODUCTION 1

II. PROFESSIONAL BACKGROUND AND QUALIFICATIONS 2

III. MATERIALS CONSIDERED 11

IV. LEGAL STANDARDS 16

A. Claim Construction 16

B. Obviousness 18

V. LEVEL OF ORDINARY SKILL IN THE ART 22

VI. OVERVIEW OF THE '802 PATENT 23

A. Priority Date 23

B. The Subject Matter of the Challenged Patent 24

C. The Challenged Claims of the '802 Patent 26

D. Prosecution History 31

E. Level of Ordinary Skill in the Art 35

F. Claim Construction of Terms in the Challenged Claims 37

1. Terms Governed By 35 U.S.C. § 112, ¶6 38

VII. TECHNOLOGY BACKGROUND AND STATE OF THE ART 41

A. Communication Management Centers 41

B. Receiving Overlapping Messages 43

C. Prioritizing Messages 46

D. Storing Messages 49

E. Playing Messages in Priority Order 51

VIII. SUMMARY OF PRIOR ART 53

A. Ohel (Ex[1004]) 53

1. Status of Ohel 53

2. Overview of the Disclosure of Ohel 53

B. Nigawara (Ex[1007]) 58

1. Status of Nigawara 58

2. Overview of the Disclosure of Nigawara 58

C. Doolin (Ex[1008]) 61

1. Status of Doolin 61

2. Doolin's Priority Date 62

3. Overview of the Disclosure of Doolin 64

IX. APPLICATION OF THE PRIOR ART TO THE CHALLENGED CLAIMS 66

A. Grounds of Unpatentability 67

B. Ground 1: Claims 1-21 are obvious over Ohel. 67

1. Claim 1 67

a. 1[Pre]: A method of managing communication in a communication system, the communication system receiving messages from a plurality of channels, the method comprising: 68

b. 1[a]: receiving a first message on a first dedicated channel from amongst the plurality of channels at the communication system, the plurality of channels being dedicated to different entities, the first dedicated channel being dedicated to receiving messages from a first entity; 69

c. 1[b]: receiving a second message on a second dedicated channel being dedicated to receiving messages from a second entity from amongst the plurality of channels at the communication system, the second message overlapping with the first message in time; 73

d. 1[c]: determining one or more priorities for the first message received on the first dedicated channel from the first entity and the second message received on the second dedicated channel from the second entity based on at least one pre-defined parameter; 76

e. 1[d]: determining which message out of the first message and the second message should be stored and subsequently played based on the second message overlapping with the first message in time and one or more priorities assigned to the first and the second message; 80

f. 1[e]: playing the message having a higher priority between the first and the second message; 82

g. 1[f]: storing at least one message having a lower priority between the first and the second message based on the determination; and..... 83

h. 1[g]: playing the stored message subsequent to completing playing of the message having higher priority. 85

2. Claim 2 87

a. 2[pre] 87

b. 2[a]: calculating the priorities of the received messages; and..... 87

c. 2[b]: comparing the priorities of the received messages. 90

3. Claim 3: The method of claim 1, wherein the predefined parameter comprises a bandwidth requirement of the received messages.....92

4. Claim 4: The method of claim 1, wherein the predefined parameter comprises a type of the received messages.....94

5. Claim 5: The method of claim 4, wherein the type of received messages being one of a group comprising audio, video, text, and image. 95

6. Claim 6: The method of claim 1, wherein determining the priority comprises assigning priorities to the first message and the second message based on inputs from a user.....95

7. Claim 7: The method of claim 1, further comprising informing an operator the time of receipt of a message while playing the first message and the second message. 97

8. Claim 8: The method of claim 1, wherein a message includes voice over internet protocol communications.....99

9. Claim 9: The method of claim 1, wherein a message includes mobile phone communications. 100

10. Claim 10: The method of claim 1, wherein a message includes radio communications. 101

11. Claim 11: A method of managing communication in a communication system, the communication system receiving messages from a plurality of channels, the method comprising: receiving a first message on a first dedicated channel from amongst the plurality of channels at the communication system, the plurality of channels being dedicated to different entities, the first dedicated channel being dedicated to receiving messages from a first entity; receiving a second message on a second dedicated channel being dedicated to receiving messages from a second entity from amongst the plurality of channels at the communication system, the second message overlapping with the first message in time; prioritizing the first and second messages based on at least one predefined parameter; determining which message out of the first message and the second message should be stored and subsequently played based on the second message overlapping with the first message in time and one or more priorities assigned to the first and the second message; playing the message having the highest priority; storing the message having lower priority in a queue on the basis of the determination and the prioritization; checking periodically the status of the message being played; and playing the stored message having the highest priority.....103

12. Claim 12: The method of claim 11 further comprising informing a user the time of receipt of a message while plying the message. 105

13. Claim 13: A communication system for managing communication, the communication system receiving messages from a plurality of channels, the communication system comprising: means for receiving a plurality of messages on the plurality of channels, the plurality of messages received including a first message received from a first dedicated channel

dedicated to receiving messages from a first entity and a second message received from a second dedicated channel dedicated to receiving messages from a second entity; means for playing a received messages having the highest priority, the plurality of received messages being prioritized based on at least one predefined parameter; a central conferencing system comprising: means for prioritizing the received plurality of messages including the first message from the first dedicated channel and the second message from the second dedicated channel based on the predefined parameter; means for determining which messages out of the received messages should be stored and subsequently played based on messages overlap-ping in time and one or more priorities assigned to the first and the second message; means for sending the messages for playing based on the associate priority; and means for storing the messages other than the one sent for playing in a queue based upon the associated priority.....106

14. Claim 14: A communication system for managing communication, the communication system receiving messages from a plurality of channels, the communication system comprising: a receiver module configured to receive a plurality of messages on the plurality of channels, the plurality of messages received including a first message received from a first dedicated channel dedicated to receiving messages from a first entity and a second message received from a second dedicated channel dedicated to receiving messages from a second entity; a player module for playing a received message having the highest priority, the plurality of received messages being prioritized based on at least one predefined parameter; a central conferencing system comprising: a prioritizing module configured to prioritize of messages including the first message received on the first dedicated channel and the second message received on the second dedicated channel based on the pre-defined parameter; a determiner configured to determine which messages out of the received messages should be stored and subsequently played based on the second message overlapping with the first message in time and one or more priorities assigned to the first and the second message; a sender module to send a message for playing based on the associated priority; and a

storage medium configured to store the messages in a queue based upon the associated priority and the determination. 110

15. Claims 15-16 111

16. Claim 17: A central conferencing system for managing a plurality of messages received by a communication system, the central conferencing system comprising: a receiver module configured to receive a plurality of messages on the plurality of channels, the plurality of messages received including a first message received from a first dedicated channel dedicated to receiving messages from a first entity and a second message received from a second dedicated channel dedicated to receiving message from a second entity; a prioritizing module for prioritizing the received messages based on at least one predefined parameter, the prioritizing module comprises: a priority calculator for calculating the priority of the received messages including the first message received on the first dedicated channel and the second message received on the second dedicated channel; and a comparison module for comparing the priorities of the plurality of received messages; a sender module for sending the messages with the highest priority to the player module for playing; a determiner configured to determine which messages out of the received messages should be stored and subsequently played based on the second message overlapping with the first message in time and one or more priorities assigned to the first and the second message; a storage module for storing the messages from amongst the plurality of messages that are not being played; and an alert module for informing a user the time of receipt of a message while playing the message. 113

17. Claim 18: An apparatus for managing communication in a communication system, the communication system receiving messages on a plurality of channels, the apparatus comprising: a processing system including a processor coupled to a display and us-er input device; and a machine-readable medium including instructions executable by the processor comprising: one or more instructions for receiving a plurality of messages on the plurality of channels, the plurality of messages received including a first message received from a first dedicated channel to receiving

messages from a first entity and a second message received from a second dedicated channel dedicated to receiving messages from a second entity; one or more instructions for playing the message having the highest priority, the priority of the received messages including the first message and the second message being determined based on at least one predefined parameter; one or more instructions for determining which messages out of the received m messages should be stored and subsequently played based on messages overlapping in time and one or more priorities assigned to the first and the second message; one or more instructions for playing the stored messages subsequent to completing playing of the message having higher priority. ...115

18. Claim 19: A machine-readable medium including instructions executable by the processor comprising: one or more instructions for receiving a plurality of messages on the plurality of channels, the plurality of messages received including a first message received from a first dedicated channel dedicated to receiving messages from a first entity and a second message received from a second dedicated channel dedicated to receiving messages from a second entity; one or more instructions for playing the message having the highest priority, the priority of the received messages being including the first message and the second message being determined based on at least one pre-defined parameter; one or more instructions for determining which messages out of the received messages should be stored and subsequently played based on message overlapping in time and one or more priorities assigned to the first and the second message; one or more instructions for storing at least one message having a low-er priority; and one or more instructions for playing the stored messages subsequent to completing playing of the message having higher priority. 118

19. Claim 20: The method of claim 1, wherein playing the message comprises playing the message having a higher priority between the first and second message without storing the message having the higher priority if no other message is being played.....120

20. Claim 21: The method of claim 1, wherein determining the priority comprises determining the priority based on the

dedicated channel the first message and/or the second message is received on. 122

C. Ground 2: Claims 1-7 and 11-21 are obvious over Nigawara. 122

1. Nigawara is Analogous Art to the '802 Patent 122

2. Claim 1 126

a. 1[Pre]: A method of managing communication in a communication system, the communication system receiving messages from a plurality of channels, the method comprising:..... 127

b. 1[a]: receiving a first message on a first dedicated channel from amongst the plurality of channels at the communication system, the plurality of channels being dedicated to different entities, the first dedicated channel being dedicated to receiving messages from a first entity; 127

c. 1[b]: receiving a second message on a second dedicated channel being dedicated to receiving messages from a second entity from amongst the plurality of channels at the communication system, the second message overlapping with the first message in time; 130

d. 1[c]: determining one or more priorities for the first message received on the first dedicated channel from the first entity and the second message received on the second dedicated channel from the second entity based on at least one pre-defined parameter; 134

e. 1[d]: determining which message out of the first message and the second message should be stored and subsequently played based on the second message overlapping with the first message in time and one or more priorities assigned to the first and the second message; 138

f. 1[e]: playing the message having a higher priority between the first and the second message; 143

g. 1[f]: storing at least one message having a lower priority between the first and the second message based on the determination; and..... 144

h. 1[g]: playing the stored message subsequent to completing playing of the message having higher priority. 146

3. Claim 2 148

a. 2[pre]: The method of claim 1, wherein determining which message out of the first message and the second message should be stored and subsequently played comprises:..... 148

b. 2[a]: calculating the priorities of the received messages; and..... 149

c. 2[b]: comparing the priorities of the received messages. 150

4. Claim 3: The method of claim 1, wherein the predefined parameter comprises a bandwidth requirement of the received messages.....152

5. Claim 4: The method of claim 1, wherein the predefined parameter comprises a type of the received messages.....153

6. Claim 5: The method of claim 4, wherein the type of received messages being one of a group comprising audio, video, text, and image. 156

7. Claim 6: The method of claim 1, wherein determining the priority comprises assigning priorities to the first message and the second message based on inputs from a user.....158

8. Claim 7: The method of claim 1, further comprising informing an operator the time of receipt of a message while playing the first message and the second message. 159

9. Claim 11: A method of managing communication in a communication system, the communication system receiving messages from a plurality of channels, the method comprising: receiving a first message on a first dedicated channel from amongst the plurality of channels at the communication system, the plurality of channels being dedicated to different entities, the first dedicated channel being dedicated to receiving messages from a first entity; receiving a second message on a second dedicated channel being dedicated to receiving messages from a second entity from amongst the plurality of channels at the communication system, the second message overlapping with the first message in time; prioritizing the first and second messages based on at least one predefined parameter; determining which message out of the first message and the second message should be stored and subsequently played based on the second message overlapping with the first message in time and one or more priorities assigned to the first and the second message; playing the message having the highest priority; storing the message having lower priority in a queue on the basis of the

determination and the prioritization; checking periodically the status of the message being played; and playing the stored message having the highest priority.....161

10. Claim 12: The method of claim 11 further comprising informing a user the time of receipt of a message while plying the message. 164

11. Claim 13: A communication system for managing communication, the communication system receiving messages from a plurality of channels, the communication system comprising: means for receiving a plurality of messages on the plurality of channels, the plurality of messages received including a first message received from a first dedicated channel dedicated to receiving messages from a first entity and a second message received from a second dedicated channel dedicated to receiving messages from a second entity; means for playing a received messages having the highest priority, the plurality of received messages being prioritized based on at least one predefined parameter; a central conferencing system comprising: means for prioritizing the received plurality of messages including the first message from the first dedicated channel and the second message from the second dedicated channel based on the predefined parameter; means for determining which messages out of the received messages should be stored and subsequently played based on messages overlap-ping in time and one or more priorities assigned to the first and the second message; means for sending the messages for playing based on the associate priority; and means for storing the messages other than the one sent for playing in a queue based upon the associated priority.....164

12. Claim 14: A communication system for managing communication, the communication system receiving messages from a plurality of channels, the communication system comprising: a receiver module configured to receive a plurality of messages on the plurality of channels, the plurality of messages received including a first message received from a first dedicated channel dedicated to receiving messages from a first entity and a second message received from a second dedicated channel dedicated to receiving messages from a second entity; a

player module for playing a received message having the highest priority, the plurality of received messages being prioritized based on at least one predefined parameter; a central conferencing system comprising: a prioritizing module configured to prioritize of messages including the first message received on the first dedicated channel and the second message received on the second dedicated channel based on the pre-defined parameter; a determiner configured to determine which messages out of the received messages should be stored and subsequently played based on the second message overlapping with the first message in time and one or more priorities assigned to the first and the second message; a sender module to send a message for playing based on the associated priority; and a storage medium configured to store the messages in a queue based upon the associated priority and the determination. 168

13. Claims 15-16 169

14. Claim 17: A central conferencing system for managing a plurality of messages received by a communication system, the central conferencing system comprising: a receiver module configured to receive a plurality of messages on the plurality of channels, the plurality of messages received including a first message received from a first dedicated channel dedicated to receiving messages from a first entity and a second message received from a second dedicated channel dedicated to receiving message from a second entity; a prioritizing module for prioritizing the received messages based on at least one predefined parameter, the prioritizing module comprises: a priority calculator for calculating the priority of the received messages including the first message received on the first dedicated channel and the second message received on the second dedicated channel; and a comparison module for comparing the priorities of the plurality of received messages; a sender module for sending the messages with the highest priority to the player module for playing: a determiner configured to determine which messages out of the received messages should be stored and subsequently played based on the second message overlapping with the first message in time and one or more priorities assigned to the first and the second message; a storage module for storing the messages from amongst the plurality of

messages that are not being played; and an alert module for informing a user the time of receipt of a message while playing the message. 172

15. Claim 18: An apparatus for managing communication in a communication system, the communication system receiving messages on a plurality of channels, the apparatus comprising: a processing system including a processor coupled to a display and us-er input device; and a machine-readable medium including instructions executable by the processor comprising: one or more instructions for receiving a plurality of messages on the plurality of channels, the plurality of messages received including a first message received from a first dedicated channel to receiving messages from a first entity and a second message received from a second dedicated channel dedicated to receiving messages from a second entity; one or more instructions for playing the message having the highest priority, the priority of the received messages including the first message and the second message being determined based on at least one predefined parameter; one or more instructions for determining which messages out of the received m messages should be stored and subsequently played based on messages overlapping in time and one or more priorities assigned to the first and the second message; one or more instructions for playing the stored messages subsequent to completing playing of the message having higher priority. ...174

16. Claim 19: A machine-readable medium including instructions executable by the processor comprising: one or more instructions for receiving a plurality of messages on the plurality of channels, the plurality of messages received including a first message received from a first dedicated channel dedicated to receiving messages from a first entity and a second message received from a second dedicated channel dedicated to receiving messages from a second entity; one or more instructions for playing the message having the highest priority, the priority of the received messages being including the first message and the second message being determined based on at least one pre-defined parameter; one or more instructions for determining which messages out of the received messages should be stored and subsequently played based on message overlapping in time and one or more priorities assigned to the first and the second message; one or more

instructions for storing at least one message having a low-er priority; and one or more instructions for playing the stored messages subsequent to completing playing of the message having higher priority. 178

17. Claim 20: The method of claim 1, wherein playing the message comprises playing the message having a higher priority between the first and second message without storing the message having the higher priority if no other message is being played.....180

18. Claim 21: The method of claim 1, wherein determining the priority comprises determining the priority based on the dedicated channel the first message and/or the second message is received on. 181

D. Ground 3: Claims 3, and 8-10 are obvious over Nigawara in view of Doolin. 182

1. Doolin is also Analogous Art to the '802 Patent 182

2. A POSITA Would Have Combined Nigawara with Doolin...183

3. Claim 8: The method of claim 1, wherein a message includes voice over internet protocol communications.....187

4. Claim 9: The method of claim 1, wherein a message includes mobile phone communications. 188

5. Claim 10: The method of claim 1, wherein a message includes radio communications. 189

6. Claim 3: The method of claim 1, wherein the predefined parameter comprises a bandwidth requirement of the received messages.....190

X. SECONDARY CONSIDERATIONS 191

XI. CONCLUSION 192

I, David Hilliard Williams, declare as follows:

I. INTRODUCTION

1. I have been retained on behalf of Motorola Solutions, Inc. ("MSI" or "Petitioner") in connection with the above-captioned *inter partes* review ("IPR") of Claims 1-21 of U.S. Patent No. 7,324,802 (the "'802 Patent" or "Method and System for Managing Communication in Emergency Communication System," by named inventor Cullen Jennings. I understand that the '802 Patent is assigned to STA Group LLC (the "Patent Owner"). I have been asked to provide technical review, analysis, insights, and opinions regarding the '802 Patent and the prior art references that form the basis for the grounds of invalidity set forth in the Petition for *Inter Partes* Review of the '802 Patent (the "Petition"). I have been asked to provide a declaration regarding my opinions on the validity of Claims 1-21 of the '802 Patent.

2. This declaration sets forth the opinions I have formed in this IPR and provides the bases and reasons for those opinions. This declaration is based on information currently available to me. I declare that I have personal knowledge of the facts set forth in this declaration and, if called to testify as a witness, could and would do so competently.

3. I am being compensated at my usual consulting rate of $485 per hour for my work on this matter. I am also being reimbursed for any incurred expenses. My compensation is in no way dependent upon my opinions or testimony or the

outcome of this proceeding. I have no other interests in this proceeding or with Petitioner or Patent Owner.

II. PROFESSIONAL BACKGROUND AND QUALIFICATIONS

4. In formulating my opinions, I have relied upon my training, knowledge, and experience in the relevant art. A copy of my current curriculum vitae is provided as Appendix A to this declaration, and it provides a comprehensive description of my academic and employment history over the last 40 years.

5. I have nearly 40 years of experience in wireless communications services, including experience designing, implementing, and managing numerous mobile/wireless and wireline communications networks, technologies, applications, and associated infrastructure, involving working in many fields within the wireless services ecosystem including communications frequencies, channel management, bandwidth management, handset and user interface design, messaging/messaging types and prioritization mechanisms, alerts/alert types and triggers, and all aspects of location technologies, applications, and infrastructure, as well as numerous aspects of associated Information Technology systems including identification, authentication, privacy, security, and other related capabilities such as network planning, engineering and operations, including call centers.

6. I am currently the President of the company E911-LBS Consulting, and I have been with the company since 2002. As the President of E911-LBS

Consulting, I provide services across the entire wireless value chain, particularly with respect to technology and business strategic planning and product design and development associated with wireless communications services, including various forms of messaging and communications bandwidth-intensive services including location-based services (LBS), including emergency services and associated networks, technologies, user interfaces, infrastructure, and systems and methods. During this time and for almost two decades prior I have been extensively involved with many forms of communications networks, including various types of land mobile radio systems and other wireless networks, as well as various wireline networks, covering a wide range of underlying technologies, infrastructure, and topologies, and involving a wide range of voice, SMS/MMS, data, video, and other services, utilizing a wide array of user interfaces to interact with users.

7. For example, in the 1983-1985 timeframe, I was a Microprocessor system design engineer on the digitization project of the F-15 fighter jet radar system. Specifically, I designed a system for converting analog signals (radar pings, sensor measurements, etc.) to digital form, and for feeding the converted signals to various parties and subsystems remotely (e.g., carriers, other aircraft, ground control) and locally, particularly pilots and their heads-up display (HUD) interfaces. The converted signals corresponded to data relating to navigational and directional information, aircraft status, the location of other aircrafts/targets relative

to the pilot's position, and associated images. The HUD interface was integrated with the pilot's helmet or with a screen facing the pilot and allowed the pilot to look at and through the data integrated in the interface without requiring them to look down at their instrument panel, while sharing their visual, sensor, and associated information with other parties.

8. During the 1987 to 2002 timeframe, I was extensively involved in the design and implementation of communications networks and associated computing architectures for connecting computers/devices, including utilizing the Internet. For example, from 1987 to 1989 I led the design and implementation of the network and associated computer control systems for integrating hundreds of hotel and restaurant Point-of-Sale (POS) and local management systems into a brand-new data center architecture. In the early to mid-1990s, I was extensively involved in the design of next-generation intelligent network capabilities (both voice and data) for GTE, with a similar effort for Sprint shortly thereafter. In the mid to late 1990s I led a variety of engagements helping AT&T's long-distance unit launch its local services networks and helped what was then Bell Atlantic (later Verizon) launch its long-distance network. I also worked internationally for Canadian phone companies AGT and Bell Canada in modifying their system, processes, and organizations to move from a voice-centric footing to a data-centric one.

9. From 1998 to 2000, as an Associate Partner in Accenture's Communications & High Technology practice, I led the design of Nextel's first-generation location services network and developed IT capabilities for supporting location services. This involved extensive integration work with other parts of Nextel's network infrastructure and handset strategies and leveraging core capabilities such as Nextel's Push-To-Talk (PTT) capabilities. This work also including leading the development of the underlying network and Information Technology architectures that would be required to support the LBS applications product strategy and roadmap and leveraging of/integration with Nextel's E911 infrastructure.

10. In the early 2000s I advised a T-Mobile predecessor company on their post-acquisition network integration strategy, and worked with numerous startup companies develop their product, network, and user interface strategies for a variety of dot-com startups. I launched my own company focused on wireless technologies, systems, and applications in 2002.

11. A number of engagements followed involving significant experience related to E911 emergency systems. For example, in 2003-2004, I consulted with AT&T Wireless on their implementation of E911 systems and processes. Specifically, I led the development of implementation and monitoring of systems in AT&T Wireless Western Region as part of their deployment of terrestrial E911

network location infrastructure to meet the wireless E911 location requirements mandated by the FCC. This work included the development of systems, processes, and reporting infrastructure to manage and track the deployment of key wireless network infrastructure technologies. I managed the testing and Federal Communications Commission reporting of network location inaccuracies, with a particular focus on detecting and troubleshooting out-of-norm technology deployment and inaccurate location conditions.

12. In 2004-2006, I worked with NAVTEQ, a key provider of LBS and E911 and other emergency services location-related map data, in developing their application developer ecosystem and website, providing developers with access to all of NAVTEQ's product and technical resources for developing location-related applications, including data products involving emergency services GIS (Geographical Information Systems). Specifically, I designed and managed the site map and overall content, including the development of comprehensive technical and business web content for all NAVTEQ map product and service lines.

13. From 2007 to 2010 timeframe, I was intimately involved in the design, implementation, launch, and operational management and troubleshooting of AT&T Wireless' location-enabled network supporting their rollout of their initial location application portfolio including AT&T Navigator, AT&T FamilyMap, Mobile Social Networking, 411 with LBS, and various Mobile Resource Management applications

for monitoring and managing field workers and assets, as well as telematics devices and applications for monitoring and managing vehicle fleets.

14. Many of the above engagements, as well as other consulting engagements spanning this timeframe, involved the design of various computer architectures, including client/server, peer-to-peer, and mainframe-based architectures, to communicate using these various wireless and wireline networks in various network topologies (ring, star, mesh, etc.), including extensively using the Internet in enabling computer-to-human, human-to-computer, computer-to-computer, and human-to-human information transfer of voice and data in numerous forms, using a variety of methods and standards. Further, an extensive amount of the above experience utilized computers, devices, and networks to remotely monitor/control/manage other devices and systems—including their location—and in many cases also involved the design of those local—remote user control and management systems and their integration into the remote monitoring applications and associated networks. For example, the GTE "high-value network" work discussed above involved the development of its product and services strategies and designs for enabling its next generation network to facilitate the control of network terminating computers, systems, and devices, as well as internal control of company networks leveraging GTE's capabilities. My work with Nextel's wireless location products utilized various mechanisms for monitoring and managing assets and

workers. AT&T's E911 network architecture and associated systems interfaced with Public Safety Answering Points (PSAPs) to direct emergency resources to 911-callers and control their deployments.

15. The Nextel work involved balancing scarce network channel and bandwidth resources with the needs of various products and services (often bandwidth intensive such as video), and similarly in the later AT&T Wireless work. For this work I served as the lead product realization manager in charge of implementing several location-based services with extensive remote monitoring and alert generation capabilities. This work involved extensive use of various forms of alerts, triggered by a variety of time elements and events, drawing on a variety of handset capabilities, utilizing and balancing available network infrastructure capabilities, enabling the sharing of location information, and using a variety of user interfaces to convey and display the associated information. These services included for example AT&T FamilyMap, where for example you could share your location with your child (and vice versa) and monitor if your child arrived at home (or not) at a certain time or under certain conditions and generate alerts accordingly. I also led the finalization of the design and implementation and launch of AT&T's Loopt mobile social networking application, where you could share your location with friends (and vice versa), under a variety of conditions, to enable for example alerts to you if a friend was within a certain distance from you or a favorite

establishment. In connection with the development of that application, I was the only non-employee to be an inventor on a patent covering controlling user location privacy ("Method and apparatus for providing mobile social networking privacy." (U.S. Patent No. 8,613,109, issued on December 17, 2013)). I also managed a portfolio of fleet management device/application/system products for AT&T that involved sharing of location information in the monitoring/tracking/controlling of vehicle fleets, and other asset management offerings for tracking and managing capital asset inventories.

16. In addition, over the last decade plus I have worked on various locations sharing-related matters for clients such as Google's Nest smart thermostats, VIVINT security systems, Genie garage door openers, Green Mountain Grill Wi-Fi connected grills, and Heil waste haulers, and numerous other engagements involving location-related privacy/security and alerts. Many of these engagements involved use of IoT sensors, networks, and interfaces involving location sharing and more broadly the use of sophisticated communications network channel and bandwidth management, utilizing a variety of data services including video/video streaming, SMS/MMS, and others.

17. Indeed, much of the above work, including the location-based services/applications work, involved my extensive involvement in user device application design and associated user interfaces, using a variety of real-time

software development methodologies (as location services generally have extensive real-time analytical and user interface requirements), platforms (smartphones, feature phones, specialty devices, laptops, desktops, multiple operating systems, etc.), and programming languages, and utilizing the internet and wireless platforms in particular for communicating with the local control systems. It also involved numerous variations in and mechanisms for identifying, controlling, managing, and prioritizing data/data streams/messaging.

18. I have authored multiple books on wireless location, including:

- *The Definitive Guide to GPS, RFID, Wi-Fi, and Other Wireless Location-Based Services* (2005 and 2009 versions);
- *The Definitive Guide to Wireless E911*; and
- *The Definitive Guide to Mobile Positioning and Location Management* (co-author).

19. I received a B.S. degree in Electrical Engineering from Purdue University in 1983 with top honors. I received a MBA degree in Information Systems Management from The University of Texas at Austin in 1987, also with top honors. I have 8 patents (in addition to the AT&T one mentioned above), involving various implementations involving communications networks, location, context, user interfaces, and privacy/security/access mechanisms.

20. My curriculum vitae contains further details on my education, experience, publications, and other qualifications to render an expert option.

III. MATERIALS CONSIDERED

21. The analysis that I provide in this declaration is based on my education, research, experience, and professional judgment, as well as the documents I have considered, including the '802 Patent (Exhibit 1001) and its prosecution history (Exhibit 1003). I have reviewed and am familiar with the specification of the '802 Patent. I have reviewed and am familiar with the file history of the '802 Patent.

22. In preparing this declaration, I have also reviewed and am familiar with the following prior art used in the Petition and in my declaration below:

- **Exhibit 1004** – U.S. Patent Publication No. 2004/0117859 A1 ("Ohel") is entitled "Multiple Channel Data Recorder and Method for Recording Data on Multiple Channels." Ohel was filed December 16, 2002, and published June 17, 2004 which is more than one year before the January 20, 2005 priority date of the '802 Patent.[1] I understand from counsel for Petitioner that Ohel qualifies as prior art under at least pre-AIA 35 U.S.C. §§ 102(a), (b) and (e).
- **Exhibit 1007** – U.S. Patent No. 4,914,705 ("Nigawara") is entitled

[1] As discussed further below, the '802 Patent was filed on January 20, 2005. Ex[1001], Cover.

"Voice Message Announcing Method and System for Plant." Nigawara was filed September 3, 1987 and issued April 3, 1990 which is more than one year before the January 20, 2005 priority date of the '802 Patent. I understand from counsel for Petitioner that Nigawara qualifies as prior art under at least pre-AIA 35 U.S.C. §§ 102(a), (b) and (e).

- **Exhibit 1008** – U.S. Patent Publication No. 2006/0176169 A1 ("Doolin") is entitled "System for Sensing Environmental Conditions." Doolin was filed December 16, 2005, with priority to a provisional application filed December 17, 2004, and published August 10, 2006. The Doolin Provisional provides support under the subject matter I have relied on and therefore is entitled to its priority date, which is more than one year before the January 20, 2005 priority date of the '802 Patent. I understand from counsel for Petitioner that Doolin qualifies as prior art under at least pre-AIA 35 U.S.C. §§ 102(a), (b) and (e).

23. In forming the opinions expressed in this declaration, I have considered the materials listed in the table below (which includes the materials identified above) as well as any other document cited in this declaration.

Ex[No.][2]	Description of Documents
1001	U.S. Patent No. 7,324,802 **("'802 Patent")**
1003	Prosecution File History of the '802 Patent
1004	U.S. Patent Publication No. 2004/0117859 A1 to Hagai Ohel, entitled "Multiple Channel Data Recorder and Method for Recording Data on Multiple Channels" (filed Dec. 16, 2002, and published June 17, 2004) **("Ohel")**
1005	Federal Communications Commission, Report and Order and Further Notice of Proposed Rule Making, FCC 94-288 (December 9, 1994) **("FCC")**
1006	U.S. Patent Publication No. 2003/0228863 A1 to Raymond Vander Veen et al., entitled "Voicemail User Interface Methods and Apparatus for Reliable Mobile Communication Devices" (filed June 6, 2003, and issued Dec. 11, 2003) **("Vander Veen")**
1007	U.S. Patent No. 4,914,705 to Seiitsu Nigawara, entitled "Voice Message Announcing Method and System for Plant" (filed Sep. 3, 1987, and issued Apr. 3, 1990) **("Nigawara")**
1008	U.S. Patent Publication No. 2006/0176169 A1 to David M. Doolin, et al., entitled "System for Sensing Environmental Conditions" (filed Dec. 16, 2005, with priority to a provisional application filed Dec. 17, 2004, and published Aug. 10, 2006) **("Doolin")**

[2] Citations to issued patents (Exhibits 1001, 1007, 1016, 1017, 1019, and 1021) are made by column and line number. Citations to patent application publications (Exhibits 1004, 1006, 1008, 1009, 1012, 1014, and 1020) and Exhibit 1005 are made by paragraph number. Citations to Exhibit 1006, 1015, 1018, and 1023-1026 are to the original page numbering in the exhibit. Citations to Exhibits 1003, 1005, 1010-1011, 1013, and 1022 are to the page number added by the exhibit label.

Ex[No.][2]	Description of Documents
1009	U.S. Provisional Patent Appl. No. 60/637,279 to Doolin et al. **("Doolin Provisional")**
1010	File History of U.S. Patent Application Publication No. 2006/0176169 A1 to Doolin et al.
1011	Letter from James Shimota, Partner, K&L Gates to Natalie Gonzales, Partner, Baker Botts L.L.P., RE: Plaintiff's Infringement Contentions (Mar. 30, 2023).
1012	U.S. Patent Publication No. 2005/0215229 A1 to Steven D. Cheng, entitled "Call Processing System" (filed Mar. 26, 2004, and published Sep. 29, 2005) **("Cheng")**
1013	New York Radio Frequencies (June 6, 2002), (https://web.archive.org/web/20020606155134/https:/thushara.com/new-york-radio-frequencies.htm)
1014	U.S. Patent Publication No. 2003/0063714 A1 to Peggy M. Stumer et al., entitled "Internet Protocol (IP) Emergency Connections (ITEC) Telephony" (filed Sep. 26, 2001, and published Apr. 3, 2003) **("Stumer")**
1015	Ericsson, *Maintenance Manual, EDACS ® C3 Maestro™ Console System with Enhanced Audio Enclosure* (March 1995) **("C3 Manual")**
1016	U.S. Patent No. 3,133,995 to Alfred Zarouni, entitled "Call Awaiting Signal Telephone Circuits" (filed Sep. 18, 1961, and issued May 19, 1964) **("'995")**
1017	U.S. Patent No. 5,134,652 to Allan G. Brown et al., entitled "Communication Console Station with Priority Queuing" (filed Aug. 23, 1991, and issued Jul. 28, 1992) **("'652")**
1018	Motorola Inc., *CENTRACOM Gold Series Classic CRT User's Guide* (1998) **("CENTRACOM")**

Ex[No.][2]	Description of Documents
1019	U.S. Patent No. 4,959,648 to Robert L. Breeden, et al., entitled "Dual Dynamic Priority Control in a Selective Call System" (filed Feb. 10, 1989, and issued Sep. 25, 1990) **("'648")**
1020	U.S. Patent Publication No. 2002/0080928 A1 to Cary Lee Bates et al., entitled "Telephone Message System with Flexible Presentation Capability" (filed Dec. 22, 2000, and published Jun. 27, 2002) **("Bates")**
1021	U.S. Patent No. 2,800,530 to Harry R. Van Deventer et al., entitled "Telephone Answering and Recording Devices" (filed Dec. 17, 1949, and issued July 23, 1957) **("'530")**
1022	Plaintiff's First Amended Disclosure of Asserted Claims and Infringement Contentions and Document Production Accompanying Disclosure Pursuant to P.R. 3-1 & 3-2, No. 2:22-CV-0381-JRG-RSP (E.D. Tex. June 15, 2023).
1023	Katherine K. Vidal, *Memorandum: Interim Procedure for Discretionary Denials in AIA Post-Grant Proceedings with Parallel District Court Litigation* (June 21, 2022)
1024	Docket Control Order, *STA Group LLC v. Motorola Solutions, Inc.*, No. 2:22-CV-0381-JRG-RSP, Dkt. 35 (E.D. Tex. Feb. 3, 2023)
1025	Telex-Vega, *Price List* (April 1, 2003) (available at: https://web.archive.org/web/20030401105942/http://vega-signaling.com/) **("C-Soft Price List")**
1026	Motorola Inc., *Motorola Annual Report 1975* (1975) **("1975 Report")**
1027	Parties' Local P.R. 4-2 Disclosure of Preliminary Proposed Constructions of Claim Terms and Preliminary Identification of Extrinsic Evidence

IV. LEGAL STANDARDS

24. Although I am not an attorney, I have a general understanding of the applicable legal standards pertaining to the patentability issues presented in this proceeding. My understanding of legal principles as described in this section is based on communication of those principles to me by Petitioner's legal counsel. The analysis in this declaration is in accordance with the legal principles outlined below.

25. I understand that, in this IPR, Petitioner has the burden of proving that each challenged claim is unpatentable by a preponderance of the evidence.

A. Claim Construction

26. I understand that the first step in determining whether a patent claim would have been anticipated or obvious is to ascertain how a POSITA would have understood the claim terms.

27. I understand that a patent may include two types of claims: independent claims and dependent claims. An independent claim stands alone and includes only the limitations it recites. A dependent claim can depend from an independent claim, or it can further depend from another dependent claim. I understand that a dependent claim includes all the limitations that it recites, in addition to all the limitations recited in the claim(s) from which it depends.

28. It is my understanding that in proceedings before the USPTO, the claims of a patent are to be construed under what is referred to as the "*Phillips* standard." I understand that this means that claim terms of a patent are given the ordinary and customary meaning the terms would have to a POSITA, in view of the description provided in the patent itself and the patent's file history.

29. I understand that to determine how a POSITA would understand a claim term, one should look to those sources available that show what a POSITA would have understood the disputed claim language to mean. I understand that, in construing a claim term, one looks primarily to the intrinsic patent evidence, including the words of the claims themselves, the remainder of the patent, and the patent's prosecution history. I understand that extrinsic evidence, which is evidence external to the patent and the prosecution history, may also be useful in interpreting patent claims.

30. I understand that words or terms should be given their ordinary and accepted meaning unless it appears that the inventors were using them to mean something else. In making this determination, the claims, the remainder of the patent, and the prosecution history are of paramount importance. Additionally, the patent and its prosecution history must be consulted to confirm whether the patentee has acted as its own lexicographer (i.e., provided its own special meaning to any

disputed terms), or intentionally disclaimed, disavowed, or surrendered any claim scope.

B. Obviousness

31. I understand that a patent claim is unpatentable if, at the time of the invention, it would have been obvious to one of ordinary skill in the art to combine the teachings of the prior art to yield the patent claim. I also understand that it is not required (although it is acceptable) that each element of a patent claim be found in a single reference in order to find a patent claim obvious. This means that even if all of the requirements of the claim cannot be found in a single prior art reference that would anticipate the claim, the claim can still be invalid. For a patent claim to be found obvious, all the elements of the patent claim may be found in a combination of references at which a POSITA would have been reasonably expected to arrive.

32. I understand that the following factors should be considered in analyzing obviousness: (1) the scope and content of the prior art; (2) the differences between the prior art and the claims; (3) the level of ordinary skill in the pertinent art; and (4) other objective considerations identified below. I understand that an invention is obvious when the differences between the subject matter sought to be patented and the prior art are such that the subject matter as a whole would have been obvious to a POSITA at the time the invention was made. I also understand that a POSITA is not an automaton but is a person having ordinary creativity.

33. For example, I understand that two or more prior art references (e.g., prior art articles, patents, or publications) that each disclose fewer than all elements of a patent claim may nevertheless be combined to render a patent claim obvious if the combination of the prior art collectively discloses all elements of the claim and a POSITA at the time would have been motivated to combine the prior art in such a way. I understand that this motivation to combine need not be explicit in any of the prior art but may be inferred from the knowledge of a POSITA at the time the patent was filed.

34. I further understand that one or more prior art references, articles, patents, or publications that disclose fewer than all of the elements of a patent claim may render a patent claim obvious if including the missing element would have been obvious to a POSITA (e.g., the missing element represents only an insubstantial difference over the prior art or a reconfiguration of a known system). For example, I understand that a claim may be deemed invalid for obviousness in light of a single prior art reference, without the need to combine references, if the elements of the claim that are not found in the reference can be supplied by the knowledge or common sense of a POSITA.

35. I understand that a POSITA is assumed to have knowledge of all prior art references. I also understand that when considering the obviousness of a patent claim, one may consider whether a teaching, suggestion, or motivation to combine

the references exists so as to avoid impermissibly applying hindsight when considering the prior art. I understand this test should not be rigidly applied, but that the test can be important to avoiding such hindsight.

36. I understand that even if a prima facie case of obviousness is established, the final determination of obviousness must also consider objective indicia of nonobviousness, which I understand are also referred to as "secondary considerations," if presented. I understand that these objective indicia can be important evidence as to whether a patent is obvious or nonobvious. These secondary considerations of non-obviousness may include, for example:

- a long felt but unmet need in the prior art that was satisfied by the claimed invention;
- commercial success of processes claimed by the patent;
- unexpected results achieved by the invention;
- praise of the invention by others skilled in the art;
- the taking of licenses under the patent by others; and
- deliberate copying of the invention.

37. I further understand that secondary considerations evidence is only relevant if the offering party establishes a connection, or nexus, between the evidence and the claimed invention.

38. It is also my understanding that there are additional considerations that may be used as further guidance as to when the above factors will result in a finding that a claim is obvious, including the following:

- the claimed subject matter is simply a combination of prior art elements according to known methods to yield predictable results;
- the claimed subject matter is a simple substitution of one known element for another to obtain predictable results;
- the claimed subject matter uses known techniques to improve similar devices or methods in the same way;
- the claimed subject matter applies a known technique to a known device or method that is ready for improvement to yield predictable results;
- the claimed subject matter would have been "obvious to try" choosing from a finite number of identified, predictable solutions, with a reasonable expectation of success;
- there is known work in one field of endeavor that may prompt variations of it for use in either the same field or a different one based on design incentives or other market forces if the variations would have been predictable to a POSITA;
- there existed at the time of the invention a known problem for which there was an obvious solution encompassed by the patent's claims; and

- there is some teaching, suggestion, or motivation in the prior art that would have led a POSITA to modify the prior art reference or to combine prior art reference teachings to arrive at the claimed subject matter.

39. I also understand that "obviousness" is a legal conclusion based on the underlying factual issues of the scope and content of the prior art, the differences between the claimed invention and the prior art, the level of ordinary skill in the prior art, and any objective indicia of non-obviousness. For that reason, my testimony addresses the underlying facts and factual analysis that would support a legal conclusion of obviousness, and when I use the term obvious, I am referring to the perspective of a POSITA at the time of invention.

V. LEVEL OF ORDINARY SKILL IN THE ART

40. I understand that my assessment of the claims of the '802 Patent and the teachings of the prior art and my analysis and opinions herein must be undertaken from the perspective of what would have been known or understood by a person having ordinary skill in the art, reading the '802 Patent on its priority date and in light of the specification and file history of the '802 Patent. I refer to such a person as a "POSITA."

41. I further understand that in determining the level of ordinary skill in the art, I am to consider factors including:

(a) the type of problems encountered in the art or field of invention,

(b) prior art solutions to those problems,

(c) the rapidity with which innovations are made,

(d) sophistication of the technology, and

(e) the educational level of active workers in the field.

42. I understand that a person of ordinary skill in the art is not a specific real individual, but rather a hypothetical individual having the qualities reflected by the factors above. This hypothetical person has knowledge of all prior art in the relevant field and takes from each reference what it would teach to a person having the skills of a POSITA.

43. I understand that a POSITA is a person of ordinary creativity, but not an automaton, and that a POSITA can often fit multiple patents or prior art references together like pieces of a puzzle as a result of this ordinary creativity. I also understand that I may consider the inferences and creative steps that a POSITA would employ. In addition, I understand that a POSITA would necessarily have been capable of understanding the scientific and engineering principles applicable to the pertinent art.

VI. OVERVIEW OF THE '802 PATENT

A. Priority Date

44. The '802 Patent was filed as Application No. 11/039,569 on January 20, 2005. For purposes of this proceeding, I have assumed that this is the priority

date of the ’802 Patent and have applied that date in considering the prior art and the viewpoint of a POSITA.

B. The Subject Matter of the Challenged Patent

45. The ’802 Patent is titled “Method and System for Managing Communication in Emergency Communication System” and concerns the idea that when two messages arrive at the same time, the higher priority message should be listened to first, while the other message is stored and played later.

46. As shown in Figure 4 below, overlapping radio messages are re-sequenced based on “an associated priority assigned to [each message] on the basis of at least one of the pre-defined parameters,” Ex[1001], 5:28-30. In this example, “[w]hile radio message B is being played, radio message C is received”. *Id.*, 5:37-38. Because “it is found that the priority of radio message B is higher,” “radio message C is stored in the queue” and “[a]s soon as radio message B is completed, radio message C is played.” *Id.*, 5:38-44.

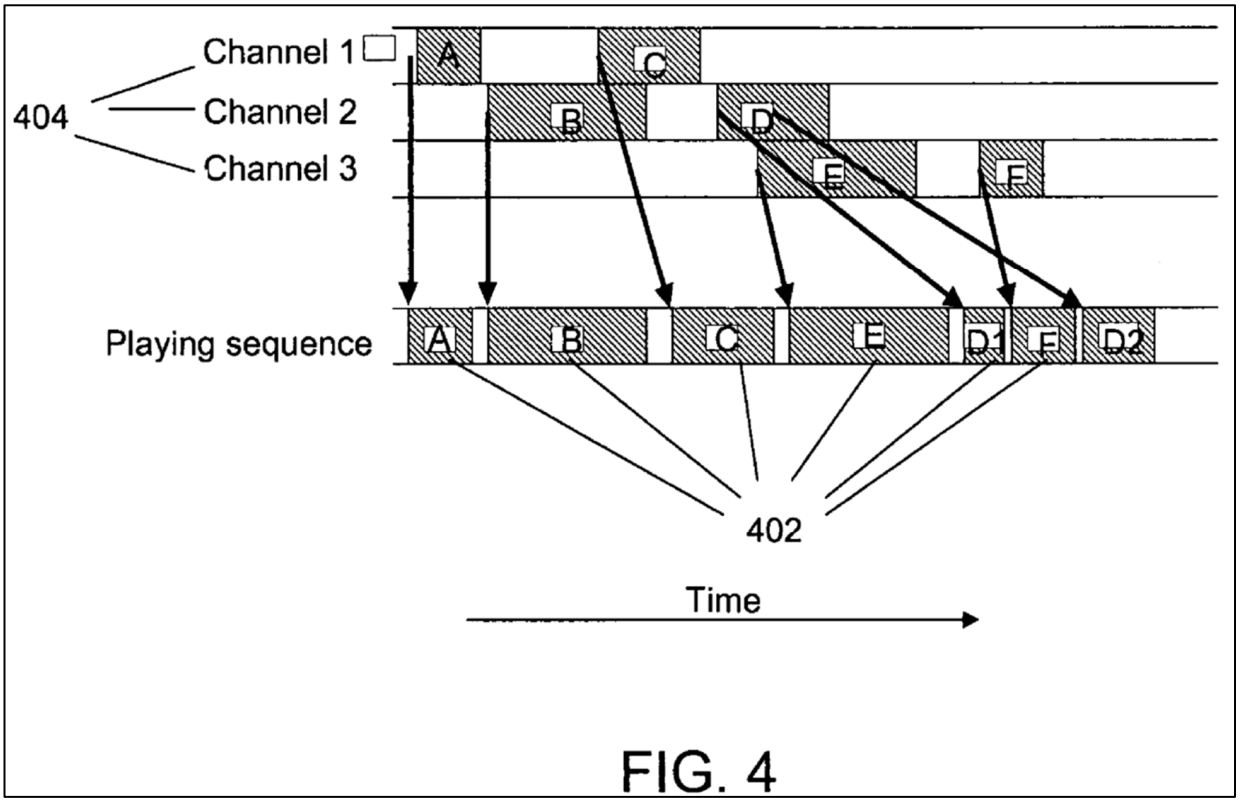

FIG. 4

47. The patent purports to be an improvement on prior systems because "[t]he invention prevents the loss of radio messages that would otherwise be lost if the operator of a conventional emergency communication system muted one of the channels in the case of overlap in the incoming radio messages." *Id.*, 6:53-56.

48. Nothing in this system or use-case was novel or non-obvious by 2005. This system is generic and could apply to any communication system that handles overlapping requests. As will be discussed, there is a long history of people recording overlapping messages and presenting them in priority order. *See* §VII. As such, none of the claimed features-individually or in combination-were new. In

my opinion, the '802 Patent combines known operations of a known communication system in a known and obvious way.

C. The Challenged Claims of the '802 Patent

49. Claims 1-21 of the '802 Patent ("Challenged Claims") are set forth below. Some of the claim elements have been further sub-divided for ease of reference. I will refer throughout this declaration to the elements of the claims with reference to the number and letter designations that have been added in the left column (e.g., "1[Pre]," "1[a]," "1[b]," etc.).

Claim Element	Claim Language from the '802 Patent
1[Pre]	A method of managing communication in a communication system, the communication system receiving messages from a plurality of channels, the method comprising:
1[a]	receiving a first message on a first dedicated channel from amongst the plurality of channels at the communication system, the plurality of channels being dedicated to different entities, the first dedicated channel being dedicated to receiving messages from a first entity;
1[b]	receiving a second message on a second dedicated channel being dedicated to receiving messages from a second entity from amongst the plurality of channels at the communication system, the second message overlapping with the first message in time;
1[c]	determining one or more priorities for the first message received on the first dedicated channel from the first entity and the second message received on the second dedicated channel from the second entity based on at least one pre-defined parameter;
1[d]	determining which message out of the first message and the second message should be stored and subsequently played based on the second message overlapping with the first message in time and one or more priorities assigned to the first and the second message;
1[e]	playing the message having a higher priority between the first and the second message;

1[f]	storing at least one message having a lower priority between the first and the second message based on the determination; and
1[g]	playing the stored message subsequent to completing playing of the message having higher priority.
2[a]	The method of claim 1, wherein determining which message out of the first message and the second message should be stored and subsequently played comprises:
2[b]	calculating the priorities of the received messages; and
2[c]	comparing the priorities of the received messages.
3	The method of claim 1, wherein the predefined parameter comprises a bandwidth requirement of the received messages.
4	The method of claim 1, wherein the predefined parameter comprises a type of the received messages.
5	The method of claim 4, wherein the type of received messages being one of a group comprising audio, video, text, and image.
6	The method of claim 1, wherein determining the priority comprises assigning priorities to the first message and the second message based on inputs from a user.
7	The method of claim 1, further comprising informing an operator the time of receipt of a message while playing the first message and the second message.
8	The method of claim 1, wherein a message includes voice over internet protocol communications.
9	The method of claim 1, wherein a message includes mobile phone communications.
10	The method of claim 1, wherein a message includes radio communications.
11[Pre]	A method of managing communication in a communication system, the communication system receiving messages from a plurality of channels, the method comprising:
11[a]	receiving a first message on a first dedicated channel from amongst the plurality of channels at the communication system, the plurality of channels being dedicated to different entities, the first dedicated channel being dedicated to receiving messages from a first entity;
11[b]	receiving a second message on a second dedicated channel being dedicated to receiving messages from a second entity from amongst the plurality of channels at the communication system, the second message overlapping with the first message in time;
11[c]	prioritizing the first and second messages based on at least one

	predefined parameter;
11[d]	determining which message out of the first message and the second message should be stored and subsequently played based on the second message overlapping with the first message in time and one or more priorities assigned to the first and the second message;
11[e]	playing the message having the highest priority;
11[f]	storing the message having lower priority in a queue on the basis of the determination and the prioritization;
11[g]	checking periodically the status of the message being played; and
11[h]	playing the stored message having the highest priority.
12	The method of claim 11 further comprising informing a user the time of receipt of a message while plying the message.
13[Pre]	A communication system for managing communication, the communication system receiving messages from a plurality of channels, the communication system comprising:
13[a]	means for receiving a plurality of messages on the plurality of channels, the plurality of messages received including a first message received from a first dedicated channel dedicated to receiving messages from a first entity and a second message received from a second dedicated channel dedicated to receiving messages from a second entity;
13[b]	means for playing a received messages having the highest priority, the plurality of received messages being prioritized based on at least one predefined parameter;
13[c]	a central conferencing system comprising:
13[d]	means for prioritizing the received plurality of messages including the first message from the first dedicated channel and the second message from the second dedicated channel based on the predefined parameter;
13[e]	means for determining which messages out of the received messages should be stored and subsequently played based on messages overlapping in time and one or more priorities assigned to the first and the second message;
13[f]	means for sending the messages for playing based on the associate priority; and
13[g]	means for storing the messages other than the one sent for playing in a queue based upon the associated priority.
14[Pre]	A communication system for managing communication, the communication system receiving messages from a plurality of channels, the communication system comprising:
14[a]	a receiver module configured to receive a plurality of messages on the

	plurality of channels, the plurality of messages received including a first message received from a first dedicated channel dedicated to receiving messages from a first entity and a second message received from a second dedicated channel dedicated to receiving messages from a second entity;
14[b]	a player module for playing a received message having the highest priority, the plurality of received messages being prioritized based on at least one predefined parameter;
14[c]	a central conferencing system comprising:
14[d]	a prioritizing module configured to prioritize of messages including the first message received on the first dedicated channel and the second message received on the second dedicated channel based on the pre-defined parameter;
14[e]	a determiner configured to determine which messages out of the received messages should be stored and subsequently played based on the second message overlapping with the first message in time and one or more priorities assigned to the first and the second message;
14[f]	a sender module to send a message for playing based on the associated priority; and
14[g]	a storage medium configured to store the messages in a queue based upon the associated priority and the determination.
15[a]	The communication system of claim 14, wherein the prioritizing module comprises:
15[b]	a priority calculator for calculating the priority of the received messages; and
15[c]	a comparison module for comparing the priorities of the plurality of received messages.
16	The communication system of claim 14, wherein the central conferencing system further comprises an alert module for informing an operator the time of receipt of a message while playing the message.
17[Pre]	A central conferencing system for managing a plurality of messages received by a communication system, the central conferencing system comprising:
17[a]	a receiver module configured to receive a plurality of messages on the plurality of channels, the plurality of messages received including a first message received from a first dedicated channel dedicated to receiving messages from a first entity and a second message received from a second dedicated channel dedicated to receiving message from a second entity;

17[b]	a prioritizing module for prioritizing the received messages based on at least one predefined parameter, the prioritizing module comprises:
17[c]	a priority calculator for calculating the priority of the received messages including the first message received on the first dedicated channel and the second message received on the second dedicated channel; and
17[d]	a comparison module for comparing the priorities of the plurality of received messages;
17[e]	a sender module for sending the messages with the highest priority to the player module for playing:
17[f]	a determiner configured to determine which messages out of the received messages should be stored and subsequently played based on the second message overlapping with the first message in time and one or more priorities assigned to the first and the second message;
17[g]	a storage module for storing the messages from amongst the plurality of messages that are not being played; and
17[h]	an alert module for informing a user the time of receipt of a message while playing the message.
18[Pre]	An apparatus for managing communication in a communication system, the communication system receiving messages on a plurality of channels, the apparatus comprising:
18[a]	a processing system including a processor coupled to a display and user input device; and
18[b]	a machine-readable medium including instructions executable by the processor comprising:
18[c]	one or more instructions for receiving a plurality of messages on the plurality of channels, the plurality of messages received including a first message received from a first dedicated channel to receiving messages from a first entity and a second message received from a second dedicated channel dedicated to receiving messages from a second entity;
18[d]	one or more instructions for playing the message having the highest priority, the priority of the received messages including the first message and the second message being determined based on at least one predefined parameter;
18[e]	one or more instructions for determining which messages out of the received m messages should be stored and subsequently played based on messages overlapping in time and one or more priorities assigned to the first and the second message;
18[f]	one or more instructions for playing the stored messages subsequent to

	completing playing of the message having higher priority.
19[Pre]	A machine-readable medium including instructions executable by the processor comprising:
19[a]	one or more instructions for receiving a plurality of messages on the plurality of channels, the plurality of messages received including a first message received from a first dedicated channel dedicated to receiving messages from a first entity and a second message received from a second dedicated channel dedicated to receiving messages from a second entity;
19[b]	one or more instructions for playing the message having the highest priority, the priority of the received messages being including the first message and the second message being determined based on at least one pre-defined parameter;
19[c]	one or more instructions for determining which messages out of the received messages should be stored and subsequently played based on message overlapping in time and one or more priorities assigned to the first and the second message;
19[d]	one or more instructions for storing at least one message having a lower priority; and
19[e]	one or more instructions for playing the stored messages subsequent to completing playing of the message having higher priority.
20	The method of claim 1, wherein playing the message comprises playing the message having a higher priority between the first and second message without storing the message having the higher priority if no other message is being played.
21	The method of claim 1, wherein determining the priority comprises determining the priority based on the dedicated channel the first message and/or the second message is received on.

D. Prosecution History

50. The ’802 Patent was filed with 20 claims. The Examiner rejected all original claims as obvious over Cheng (U.S. Publication No. 2005/0215229 A1) in view of Uchida (U.S. Patent No. 6,249,231 B1). Ex[1003], pp.105-114. To overcome these rejections, applicant amended claim 1 (underlined below) to add the

requirements: "at the emergency communication system" and "determining which message out of the first message and the second message should be stored and subsequently played based on the second message overlapping with the first message in time and one or more priories assigned to the first and the second message;" and made similar amendments to claims 12, 14, 15, and 18-20 along with minor amendments to claim 13. *Id.*, pp.93-98. Applicant also added claim 21, shown below. *Id.*, p.98.

> 1. (Currently amended) A method of managing communication in an emergency communication system, the emergency communication system receiving messages from a plurality of channels, the method comprising:
>
> receiving a first message on a first channel from amongst the plurality of channels at the emergency communication system;
>
> receiving at least one second message on channels other than the first channel from amongst the plurality of channels at the emergency communication system, the second message overlapping with the first message in time;
>
> determining which message out of the first message and the second message should be stored and subsequently played based on the second message overlapping with the first message in time and one or more priorities assigned to the first and the second message;
>
> playing the message having a higher priority between the first and the second message;
>
> storing at least one message having a lower priority between the first and the second message based on the determination; and
>
> playing the stored message subsequent to completing playing of the message having higher priority.

> 21. (new) The method of claim 1, wherein playing the message comprises playing the message having a higher priority between the first and second message without storing the message having the higher priority if no other message is being played

51. The Examiner again rejected claims 1-20 as obvious and objected to claim 21 under 132(a) for introducing new matter. To overcome these rejections, applicant attempted to traverse the 132(a) rejection of claim 21 based on reference to paragraph 21 on page 9 of the as-filed specification and the 103(a) rejection of claims 1-20 arguing that the cited art does not discuss "the determining element" of claim 1. *Id.*, pp.60-62.

52. In an advisory action, the Examiner stated "The applicant fails to demonstrate that the solution claimed in claim 21 is specific to that problem, is supported by the specification. Furthermore, the applicant admits that such example does not exist in the original specification" and that the cited art "in combination teach the limitations in claim 1; claim 1 is broad enough that it reads on the references cited." *Id.*, p.51.

53. Following an Examiner Interview, applicant amended claim 1 (underlined below) to add the requirements: "determining one or more priorities for the first message received on the first dedicated channel from the first entity and the second message received on the second dedicated channel from the second entity based on at least on pre-defined parameter" and "the plurality of channels being

dedicated to different entities, the first dedicated channel being dedicated to receiving messages from a first entity;" and made similar amendments to claims 12, 14, 15, and 18-20 along with minor amendments to claims 3-5, 7, 8, 13, 16, and 17. *Id.*, pp.36-42. Applicant also added claim 22, shown below, and cancelled claim 2. *Id.*, p.43.

> 1. (Currently amended) A method of managing communication in ~~an emergency~~a communication system, the ~~emergency~~ communication system receiving messages from a plurality of channels, the method comprising:
>
> receiving a first message on a first dedicated channel from amongst the plurality of channels at the ~~emergency~~ communication system, the plurality of channels being dedicated to different entities, the first dedicated channel being dedicated to receiving messages from a first entity;
>
> receiving ~~at least one~~a second message on a second dedicated channel being dedicated to receiving messages from a second entity~~channels other than the first channel~~ from amongst the plurality of channels at the ~~emergency~~ communication system, the second message overlapping with the first message in time;
>
> determining one or more priorities for the first message received on the first dedicated channel from the first entity and the second message received on the second dedicated channel from the second entity based on at least one pre-defined parameter;
>
> determining which message out of the first message and the second message should be stored and subsequently played based on the second message overlapping with the first message in time and one or more priorities assigned to the first and the second message;
>
> playing the message having a higher priority between the first and the second message;
>
> storing at least one message having a lower priority between the first and the second message based on the determination; and
>
> playing the stored message subsequent to completing playing of the message having higher priority.

> 22. (New) The method of claim 1, wherein determining the priority comprises determining the priority based on the dedicated channel the first message and/or the second message is received on.

54. On September 10, 2007, the Examiner allowed the pending claims and stated: "The method of queuing calls and arranging the calls with priority parameters clearly is not defined in cited reference. Therefore, the examiner consulted several areas of different classes relevant to the field of call waiting and communication centre; furthermore, consulted with primary examiner Lewis West in the field furthering prosecution." *Id.*, p.19.

E. Level of Ordinary Skill in the Art

55. I have been asked to consider the level of ordinary skill in the field that someone would have had at the time the claimed invention of the '802 Patent was made. My opinions regarding the level of ordinary skill in the art are based on, among other things, my nearly 40 years of experience in the field of networking and communication systems, as well as: the levels of education and experience of persons working in the field, the types of problems encountered in the field; and the sophistication of the technology.

56. Based on my review and analysis of the '802 Patent, the prior art cited herein, and the ordinary skill factors described in Section VI.E, in my opinion, a POSITA in the field of the '802 Patent at the time of the earliest alleged priority date

(January 20, 2005) would have had at least a bachelor's degree in computer science, electrical engineering, or a similar field, and would have had approximately two years industry experience in networking or communication systems. A person with less education but more relevant practical experience may also meet this standard. The prior art also evidences the level of skill in the art.

57. Based on my education and experience, I meet this definition of one of ordinary skill in the art, and I believe that I am qualified to provide opinions about how a POSITA at the relevant time would have interpreted and understood the '802 Patent and the prior art relied upon herein. Although my qualifications and experience exceed those of a POSITA, both in January 2005 and today, I have nevertheless applied the perspective of a POSITA in rendering my opinions below.

58. My opinions below explain how a POSITA would have understood the technology described in the '802 Patent and the prior art references I have identified herein around the January 20, 2005 timeframe. For purposes of this declaration, in general, and unless otherwise noted, my testimony below refers to the knowledge of one of ordinary skill in the art during the time period around the priority date of the '802 Patent. I would have been a person with at least ordinary skill in the art at that time.

F. Claim Construction of Terms in the Challenged Claims

59. It is my understanding that in order to properly evaluate the '802 Patent, the terms of the claims must first be interpreted. It is my understanding that the claims are to be construed according to the same claim construction standard that district courts use. For the Challenged Claims, I have applied their ordinary and customary meaning as understood by one of ordinary skill in the art at the time of the invention in light of the specification and the prosecution history, unless otherwise indicated herein.

60. I have been informed by counsel for Petitioner that, in district court, Patent Owner and Petitioner have proposed constructions for several terms. Ex[1027]. I have considered both party's constructions, and my conclusions would not change under either party's proposal. In other words, under either party's proposal for these terms, I believe the prior art discloses the claim limitations, such that my opinions would not change.

Term	**Petitioner Proposal**	**Patent Owner Proposal**
Order of steps	The steps must be performed in the recited order.	Plain and ordinary meaning
The second message overlapping with the first message in time	Plain and ordinary meaning	Plain and ordinary meaning
Playing the message/playing the…message/playing a	Plain and ordinary meaning	Plain and ordinary meaning

received message/played (Petitioner) played/playing (Patent Owner)		
Channels	Plain and ordinary meaning	Plain and ordinary meaning

61. Thus, except as set forth below, I understand that the remaining claim terms in this IPR have been construed by Petitioner according to their ordinary and customary meaning. The prior art discussed herein discloses the Challenged Claims under any reasonable construction.

1. Terms Governed By 35 U.S.C. § 112, ¶6

62. The Challenged Claims include certain elements that recite "means" for performing various functions. Claim 13 recites a "means for receiving a plurality of messages;" a "means for playing a received messages;" a "means for prioritizing the received plurality of messages;" a "means for determining;" a "means for sending the messages for playing;" and a "means for storing the messages." Ex[1001], 10:60-11:22. Using "the word 'means' creates a presumption that § 112, ¶6 applies." *Williamson v. Citrix Online, LLC*, 792 F.3d 1339, 1349 (Fed. Cir. 2015). Claims 14-17 are similar but use the term "module configured to," or similar nonce terms, instead of "means for"—for example, "a comparison module;" "a priority calculator;" and "an alert module;" Ex[1001], 11:23-14:28. Ex[1001], 11:23-14:28; *Williamson,* 792 F.3d at 1350 ("'Module'…can operate as a substitute

for 'means' in the context of § 112, para. 6."). I have been informed by counsel for Petitioner that the Challenged Claims are to be given the proposed constructions set forth below for each of these elements.

Claim 13	Claims 14-17	Structure and Function
13[a]: "**means for receiving**…"	14/17[a]: "**a receiver module**…"	Function: receiving a plurality of messages on the plurality of channels each of which are dedicated to respective entities Structure: "receiver module 502 is a radio receiver." Ex[1001], 6:4-6.
13[b]: "**means for playing**…"	14[b]: "**a player module**…"	Function: playing received messages in priority order Structure: "an audio player or an audio-video player." *Id.*, 6:47-50.
13[d]: "**means for prioritizing**…"	14[d]/17[b]: "**a prioritizing module**…"	Function: prioritizing the received plurality of messages Structure: "a software module, hardware modules, or the combination thereof." *Id.*, 6:37-42, Figs. 2-3.[3]
	15[b]/17[c]: "**a priority calculator**…"	Function: calculating the priority of the received messages Structure: "as a software module, hardware modules, or the combination thereof." *Id.*, 6:37-42, Figs. 2-4.
	15[c]/17[d]: "**a comparison module**…"	Function: comparing the priorities of the plurality of received messages Structure: "comparison module 518

[3] For each term, citations to the figures are included because they are the only evidence of a corresponding algorithm, without conceding that these claim elements satisfy 35 U.S.C. § 112.

		can be a software module" or "a hardware module such as a comparator circuit." *Id.*, 6:22-26, 6:37-42.
13[e]: "**means for determining**…"	14[e]/17[f]: "**a determiner**…"	Function: determining which messages should be stored and subsequently played based on messages overlapping in time and one or more priorities assigned to the first and the second message Structure: "a programmed general-purpose digital computer. " *Id.*, 8:56-61, Figs.2-3.
13[f]: "**means for sending**…"	14[f]/17[e]: "**a sender module**…"	Function: sending the message for playing Structure: "a software module, hardware modules, or the combination thereof." *Id.*, 6:37-42.
13[g]: "**means for storing**…"	14/17[g]: "**a storage medium**…"	Function: storing in a queue the messages that are not being played Structure: "storage module 510 can be a memory device such as a random access memory, read only memory, hard disk, and optical storage device." *Id.*, 6:28-31., 6:37-42. *See also id.*, "computer readable medium" 8:25-38.
	16/17[h]: "**an alert module**…"	Function: informing an operator the time of receipt of a message Structure: "alerts can be in the form of audio, video, or as text display." *Id.*, 6:31-34, 6:37-42.

63. However, regardless of the proposed constructions, as will be evident from my invalidity analysis, Ohel and Nigawara include virtually identical disclosure as the ’802 patent specification with respect to the limitations of Claims 13-17.

VII. TECHNOLOGY BACKGROUND AND STATE OF THE ART

64. Before providing my analysis of the ’802 Patent and the prior art references, as included below, a background discussion of the state of the art pertinent to the ’802 Patent is helpful. In the subsections below, I describe some of the features of networking and monitoring systems that would have been well known to a POSITA as of the January 20, 2005, assumed priority date of the ’802 Patent.

A. Communication Management Centers

65. By 2005, the field of communication management, including communication management centers, was crowded. Particularly in the field of emergency communications, various types of systems and devices had long been on the market. These systems typically focused on either centralizing communication with responders in the field, such as dispatch consoles, or distributing and alerting people of emergency conditions.

66. Indeed, as early as 1975, Motorola had introduced its CENTRACOM family of control centers, which continued to be developed into the 2000s.

Ex[1026], p.7. Competing products such as Ericsson's C3 dispatch console and Telex's Vega C-Soft have been on the market since at least 1995, and 2003 respectively. Ex[1015], p.2; Ex[1025], p.1. Typically, communication management centers allow operators to manage communications. For example, Motorola's CENTRACOM Gold Series allow operators to manage "60 conventional channels, trunked talk groups, Simplex Phone Patchers, and Direct Phone Interconnects." Ex[1018], p.2. In such systems that "support[] a plurality of communication channels," it was known that "each channel may be dedicated to a group/locality/unit." Ex[1001], 1:15-18; *see* Ex[1013].

67. Communication management is not restricted to dispatch consoles. Emergency call processing systems use similar techniques, like the one disclosed by U.S. Patent Publication No. 2005/0215229 A1 ("Cheng"), cited during prosecution. For example, to process "emergency data call[s]" the system "can utilizes voice, image, text, or combinations thereof" of message comprising "caller phone number, emergency message, location, and personal information." Ex[1012], [0011]-[0012].

68. Similar techniques are also used in numerous other contexts such as emergency broadcast systems. For example, the Federal Communications Commission requires that broadcasters such as radio and cable television stations maintain equipment for the Emergency Alert System (EAS) that "must have the

capability to receive at least 2 audio inputs from EAS monitoring assignments, and one data input (RS-232C with standard protocol and 1200 baud rate). The data input may be used to monitor other communications modes such as Radio Broadcast Data System (RBDS), NWR, satellite, public switched telephone network, or any other source that uses the EAS protocol." Ex[1005], §11.33(a)(1).

69. Additionally, the same communication management techniques from dispatch consoles and EAS equipment are used in and industrial monitoring systems as described in detail in Section VIII and Section IX.

70. In short, by 2005, numerous emergency communication management center devices were on the market. By that time, a POSITA would have known that such systems had certain standard features. These included (1) the ability to receive multiple input channels from sources such as trunked radio talk groups, phone interconnects, and other broadcasts; and (2) the ability to provide the received information to a user such as a central dispatcher, or a remote user who needs to be alerted to the emergency. I discuss each of these features below – all were well known as of 2005.

B. Receiving Overlapping Messages

71. Receiving overlapping messages has always been a well-known problem in the field of communications. One of the most well-known technological solutions to this problem is Call Waiting. In 1961 Alfred Zarouni

filed for, and later received, U.S. Patent No. 3,133,995 ("'995 Patent") entitled "Call Awaiting Signal Telephone Circuits." Prior to his invention, "when a subscriber is engaged on a telephone call, any other party attempting to reach his call receives a busy tone indicating the fact that the subscriber is priorly connected. The subscriber himself, however, is unaware of the attempt being made to reach him." Ex[1016], 1:14-19. Mr. Zarouni solved this problem by incorporating "an auxiliary line circuit which includes a second set of line terminals to which the second calling party is connected by the central office equipment." *Id.*, 1:57-59. When it receives a call, "the auxiliary line circuit causes a short burst of tone to be applied to the called subscriber's line indicating to him that a second party is attempting to reach him." *Id.*, 1:63-65.

72. Additionally, manual solutions to this problem have long been performed such as receptionists and assistants who deliver messages in priority order rather than simply the order in which they are received.

73. There are solutions to this problem in the context of dispatch consoles as well. For example, a POSITA would have understood that the console operator could "mute[s] all the channels except one, so as to clearly follow one channel." Ex[1001], 1:28-29. This option "results in the operator being able to follow the channel that is not a muted channel, while the message on the muted channels is lost." *Id*. Alternatively, "the operator hears overlapping messages" even though

"there is a possibility of interference in the overlapping messages, resulting in garbled communication." *Id.*, 1:23-35.

74. Further, the operator could listen to one message at a time while storing the other messages such as in a queue, or on hold, similar to call waiting, or recording one or both messages. The stored messages could then be played back later when the operator was able to listen to each individually.

75. Similarly, the emergency call processing system disclosed by Cheng "improve efficiency of an emergency call center" by "provid[ing] categorized prioritization of emergency calls, in order to ensure processing of the most urgent calls first." Ex[1012], [0008]-[0009]. Thus, Cheng clearly contemplates receiving overlapping calls that cannot be all handled as they come in.

76. The FCC's EAS uses similar techniques. FCC discloses that the two audio inputs "monitor two sources" that are each radio broadcast stations "delineated in state and local area EAS plans" such as designated "National Primary," "Local Primary," "State Primary," or "State Relay" broadcasters. Ex[1005], ¶99; Appendix E, §11.18. When the system receives overlapping messages, such as "a national activation of the EAS for a Presidential message" during a National Information Center message, the Presidential message "must take priority over any other message and preempt it if it is in progress." *Id.*, Appendix E, §11.44.

77. Similar techniques are used in numerous other contexts such as industrial monitoring systems. I describe examples of such systems in detail in Section VIII and Section IX.

78. These examples illustrate that, by 2005, it had been well-known for decades that communication management systems could receive overlapping messages. There was nothing novel or non-obvious about such functionality by 2005. Below I provide further examples of specific and well-known options for receiving overlapping messages that would have been available and obvious to a POSITA by 2005.

C. Prioritizing Messages

79. As discussed in the '995 Patent, one of the primary problems with receiving overlapping messages is that "[i]n some instances the telephone subscriber may be engaged on a call of little importance while the incoming blocked call is one of considerable importance and one which he is anxious to receive." Ex[1016], 1:19-22. Thus, additional solutions have been created to go beyond call waiting's notification of overlapping messages and ensure that the more important call is given priority.

80. For example, U.S. Patent No. 5,134,652 ("'652 Patent") teaches that overlapping calls should be "placed in the incoming-call queue 207 according to a predetermined priority at step 403." Ex[1017], 3:63-3:64. The '652 Patent

further teaches that "[a] priority may be set up which distinguishes between emergency resources and non-emergency resources, and all emergency resources are placed at the top of the queue 207, in chronological order, and all non-emergency resources are placed below any emergency resources which may be in the queue 207." *Id.* at 3:68-4:5. This provides multiple priority levels as well as "a multi-priority queue" that helps to ensure that, for example, "a call for the fire department [has] priority over a previously received call simply requesting a tow truck." *Id.* at 4:6-4:9.

81. U.S. Patent No. 4,959, 648 ("'648") similarly teaches "[w]hen a call is placed, that call is assigned a priority and an identification code identifying the call is placed in a queue corresponding to that priority." Ex[1019], 2:51-54. Figure 3 below illustrates such a queue. Cheng discloses a similar method of sorting calls into multiple queues based on priority. *See* [0025], Figure 3.

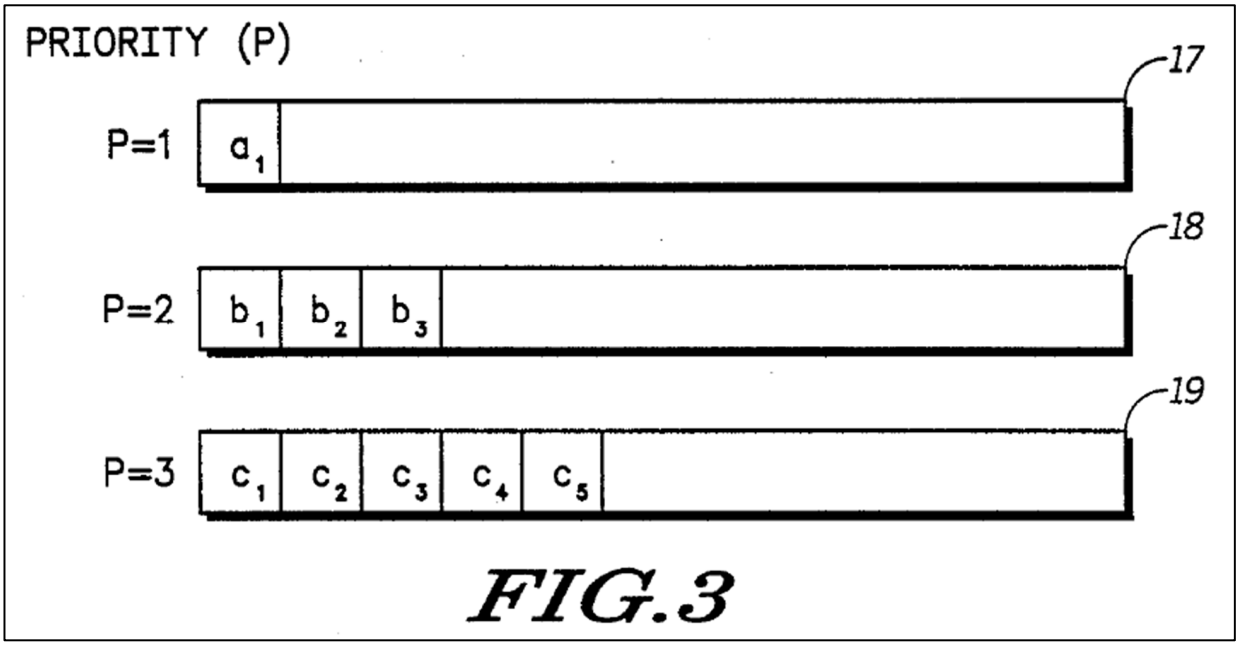

FIG.3

82. In emergency broadcast systems such as EAS, messages are prioritized by event code and applicable area. For example, "[a] national activation of the EAS for a Presidential message with the Event [*sic*] code EAN as specified in §11.31 must take priority over any other message and preempt it if it is in progress." Ex[1005], Appendix E, §11.44. Additionally, other EAS messages are to be transmitted "in the following order: first, Local Area Messages; second, State Messages; and third, National Information Center (NIC) Messages." *Id.*, Appendix E, §11.44.

83. Similar techniques are used in industrial monitoring systems. I describe examples of such systems in detail in Section VIII and Section IX.

84. These examples illustrate that, by 2005, it had been well-known for decades that communication management systems could prioritize overlapping

messages in order to ensure that the most important messages are handled first. There was nothing novel or non-obvious about such functionality by 2005. Below I provide further examples of specific and well-known options for prioritizing overlapping messages that would have been available and obvious to a POSITA by 2005.

D. Storing Messages

85. The utility and ability to store messages has long been well-known in the field of communications. For example, U.S. Patent No. 2,800,530 to Van Deventer et al., ("'530") filed in 1949 was titled "Telephone Answering and Recording Devices" and discloses "[a] recording device to be used in conjunction with a telephone circuit for the purpose of answering said telephone and ***recording the received message in the absence of persons in its vicinity***." Ex[1021], 1:27-30.

86. Answering machines continued to develop and add features such as integrating computers, "service[ing] multiple telephone lines and stor[ing] messages for multiple users," on one device. Ex[1020], [0003]. Further, the ability to timestamp stored messages with the time of receipt was incorporated. Ex[1006], Fig. 11. Additionally, features such as "the use of caller identification to sort and/or prioritize messages" has been known since at least 2000. *Id.*, [0051]. These features in particular enabled messages to be stored in "prioritized message

groupings," or queues, so that "certain calling numbers or voices" are stored and can be played back together, rather than only in chronological order. *Id.*, [0009].

87. Additionally, an alternative method of storing messages by placing incoming calls or messages into queues is also a well-known technique in the field of communications management. For example, U.S. Patent No. 5,134,652 ("'652") teaches that "[i]ncoming calls" to a communication console "are placed in an incoming-call queue according to a predetermined priority." Ex[1019], 2:42-47; *see also*, Ex[1012], [0025]. Calls are then held, or stored, in these queues until the console operator is able to handle them.

88. In emergency broadcast systems such as EAS, the system must have "a means to store at least two minutes of audio or text messages." Ex[1005], ¶91. The messages that "are not broadcast at the time of original transmission must be recorded locally by LP sources for transmission at the earliest opportunity consistent with the message priorities" discussed above. *Id.*, Appendix E, §11.44.

89. Similar techniques are used in industrial monitoring systems. I describe examples of such systems in detail in Section VIII and Section IX.

90. These examples illustrate that, by 2005, it had been well-known for decades that communication management systems could store messages for later playback. There was nothing novel or non-obvious about such functionality by

2005. Below I provide further examples of specific and well-known options for storing messages that would have been available and obvious to a POSITA by 2005.

E. Playing Messages in Priority Order

91. For as long as storing messages has been known in the field of communications, playing back those stored messages has been known as well. In addition to recording messages, '530 discloses "a speaker for the purpose of listening to the playing back of messages recorded by the answering device." Ex[1021], 1:54-55.

92. Message playback continued to develop along with message storage adding features such as prioritized playback such that "messages in such groupings are played back first, in the order of established priority." Ex[1020], [0009]. For example Bates discloses "five operational modes…for playback of stored messages" including "Sequential: All messages are played back in chronological order;" "Grouped: Messages are grouped according to the caller's identifier, with the group having the oldest message being played first;" "Grouped prioritized: Messages are grouped according to the caller's identifier, with the group having the highest user-assigned priority being played first;" "Grouped auto prioritized: Similar to grouped prioritized, but the system automatically determines priority, without the need for user assignment;" and "Prioritized: Messages are played back in the order of user-

assigned priority, without grouping by caller ID." Ex[1020], [0021]-[0026]. Thus, enabling stored messages to be played back in priority order.

93. Call queue storage systems developed similar functionality. After "[i]ncoming calls are placed in an incoming-call queue according to a predetermined priority," the operator is able to press a button so that "the incoming call on the top of the queue is automatically selected for the operator to handle." *Id.*, 2:42-47; *see also*, Ex[1012], [0025]. This simplified operations and enables the highest priority calls to be answered "without the operator having to keep track of calls or look for flashing LEDs."

94. In emergency broadcast systems such as EAS, messages "that are not broadcast at the time of original transmission must be recorded locally" and are transmitted at the earliest opportunity in the following priority order: "first, Local Area Messages; second, State Messages; and third, National Information Center (NIC) Messages." *Id.*, Appendix E, §11.44.

95. Similar techniques are used in industrial monitoring systems. I describe examples of such systems in detail in Section VIII and Section IX.

96. These examples illustrate that, by 2005, it had been well-known for decades that communication management systems could playback stored messages in priority order. There was nothing novel or non-obvious about such functionality by 2005. Below I provide further examples of specific and well-known options for

playing back stored messages in priority orderthat would have been available and obvious to a POSITA by 2005.

VIII. SUMMARY OF PRIOR ART

97. As previously stated, I have assumed, for the purposes of this analysis, that the Challenged Claims are entitled to a January 20, 2005, priority date.

A. Ohel (Ex[1004])

1. Status of Ohel

98. U.S. Patent Publication No. 2004/0117859 A1 ("Ohel") is entitled "Multiple Channel Data Recorder and Method for Recording Data on Multiple Channels." Ohel was filed December 16, 2002, and published June 17, 2004. Ex[1004], Cover. I understand from counsel for Petitioner that Ohel is prior art to the '802 Patent at least under 35 U.S.C. §§102(a), 102(b) and 102(e).

2. Overview of the Disclosure of Ohel

99. Ohel discloses "a multiple channel data recorder and method for recording data on multiple channels" intended to "prevent loss of communications during overtalk." Ex[1004], [0002], [0009]. Overtalk occurs, for example, when "a police dispatcher begins talking, the first officer's transmission is cut off and the dispatcher's communication is transmitted over the dispatch channel instead of the first officer's transmission" which means that "the first officer's message, cut off by the dispatcher's interruption, is entirely lost." *Id.*, [0005].

100. Ohel solves this overtalk problem via a device which contains, among other things, "a multiple channel data recorder, including a plurality of wireless communications transceivers including at least one of a simplex transceiver, a CDMA transceiver, a TDMA transceiver, an AMPS transceiver, a GSM transceiver, an APCO transceiver, and a TETRA transceiver," shown in Figure 2 below. *Id.*, [0035]. A CDMA transceiver operates using Code Division Multiple Access, a TDMA transceiver uses Time Division Multiple Access, an AMPS transceiver uses the Advanced Mobile Phone System, and a GSM transceiver uses the Global System for Mobile Communications standard, each for cellular communications. An APCO transceiver uses the Association of Public Safety Communications Officials standard, and a TETRA transceiver uses the Terrestrial Trunked Radio standard, both for public safety radio communications.

101. At least the simplex transceivers "operate[] on a given channel, but can be also set to transmit/receive on different channels selected by a user" and "preferably, on a channel different from the given channel[s]" of the other transceivers. *Id*., [0060]. However, Ohel acknowledges that "the seven transceiver examples is only one possible configuration in a large number of combinations that can include any combination of these transceivers 2 to 8 with any other kind of transceiver unit." *Id.*, [0063].

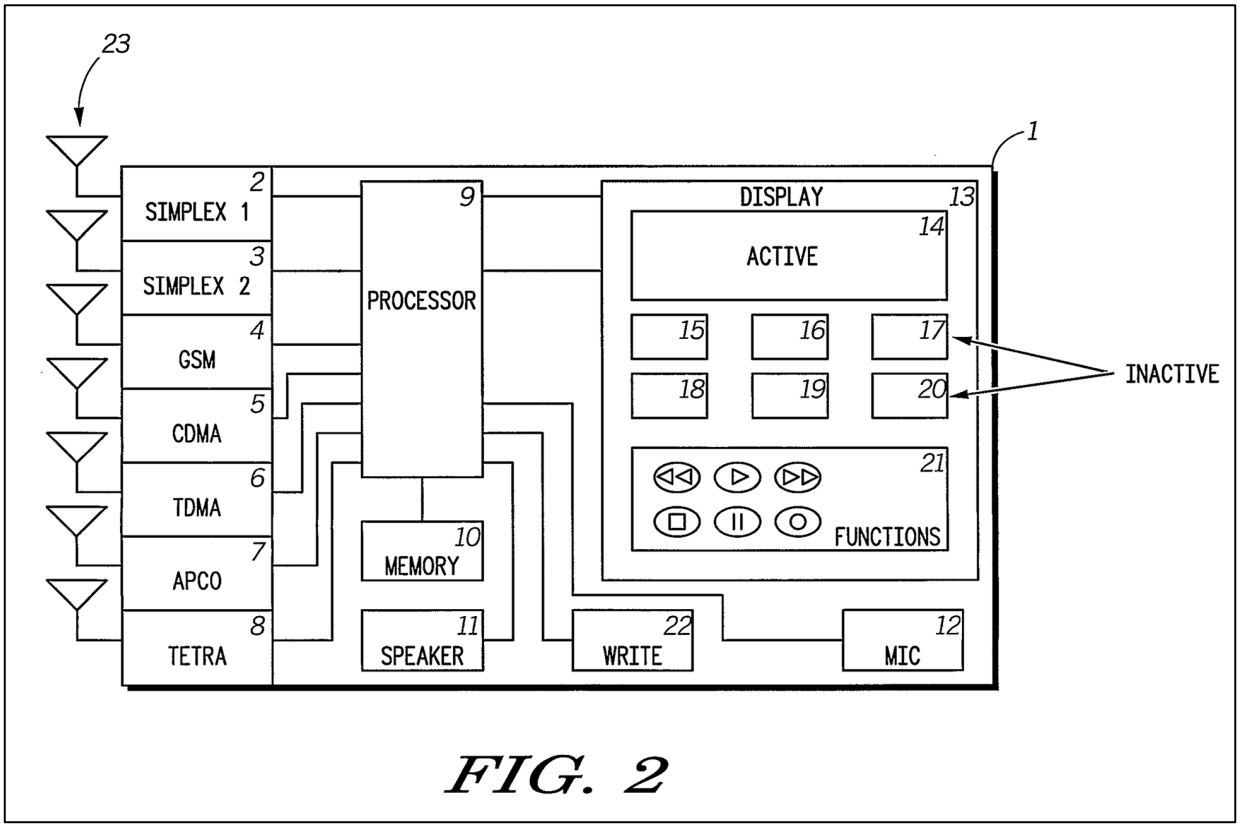

FIG. 2

Ex[1004], Fig. 2.

102. These transceivers receive "digital data, including, but not limited to code, an audio signal, an image, and a video stream." *Id*., [0016]. This information is then routed through Figure 's logic, shown below, in order to determine if overtalk is occurring, and which transmission should be recorded for later playback.

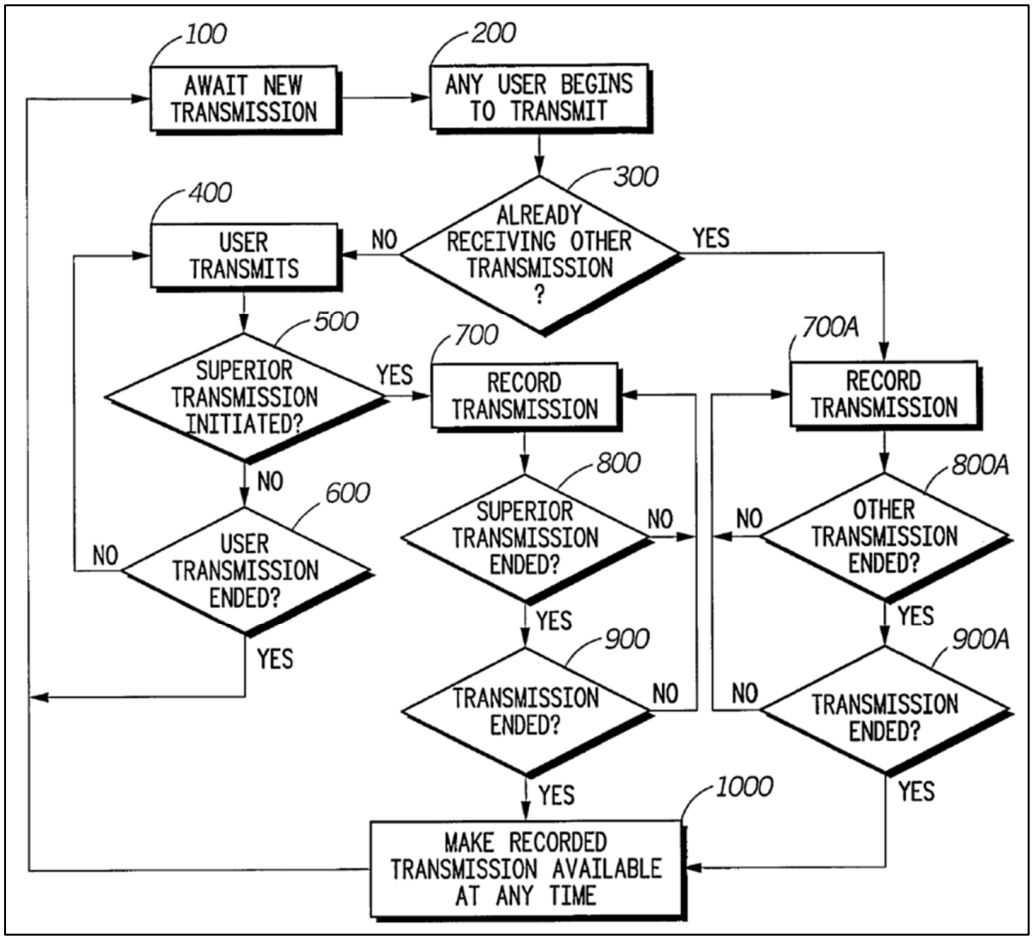

Ex[1004], Fig. 1.

103. Which transmissions should be recorded is determined based on priority status, or which message was received second chronologically, if they have the same priority. *Id.*, [0050]. This priority status, termed "superior user status" may be pre-defined in various ways such as by the specific transceiver type, or channel dedicated to dispatch communications, or by an "emergency indication" within the transmission. *Id.*, [0070]. The recording will then "be made available to the user at a later time, whether immediately after the user stops transmitting or

upon the user's manual command." *Id.*, [0050]. Further, Ohel provides that "[p]layback can begin from a starting point of a recorded transmission and/or from a user-selected point of time within a recorded transmission." *Id.*, [0017].

104. The playback mode is controlled via "display 13," shown in Figure 2 above. This display is a touch screen interface "configured to display information according to a given user's preferences." Ex[1004], [0065]. The information may include "a separate display sections for each of the transceiver units 2 to 8" with a larger section 14 dedicated to "the one active transceiver unit" and smaller sections for the "six other inactive sections 15, 16, 17, 18, 19, 20." *Id.* Further, Ohel discloses that "[t]he display 13 can also contain a functional display section 21, which contains areas for performing various functions related to stored information regarding the various transceiver units 2 to 8." *Id.*, [0066]. "For example, if audio information is being played with regard to the active display 14, then the following functions would be useful: play, stop, rewind, fast forward, pause, record, and go to a specified time stamp." *Id.*, [0066].

105. Thus, Ohel enables "the user's transmission to be interrupted, for example, by a superior user, such as a dispatcher, who has the ability to suppress any existing transmission between users and, therefore, to transmit over or instead of the currently transmitting user(s)" without losing the interrupted communication. *Id.*, [0047].

B. Nigawara (Ex[1007])

1. Status of Nigawara

106. U.S. Patent No. 4,914,705 ("Nigawara") is entitled "Voice Message Announcing Method and System for Plant." Nigawara was filed September 3, 1987 and issued April 3, 1990. Ex[1007], Cover. I understand from counsel for Petitioner that Nigawara is prior art to the '802 Patent at least under 35 U.S.C. §§102(a), 102(b) and 102(e).

2. Overview of the Disclosure of Nigawara

107. Nigawara teaches an industrial monitoring system which "announc[es], by voice messages" alerts received from monitored equipment. Ex[1007], 1:6-7. "[I]nformation signals 5 indicative of operating conditions," are received by the system which then makes an "announcement by a voice message of any one operating condition message[s]." *Id.*, 2:31-61. "When a plurality of demands for announcement of voice messages exist simultaneously, the message announcing order selection 35 unit 3 determines the priority order of announcement of the voice messages according to the contents of the messages and the relative importance of various pieces of information described below, and the voice messages are announced from speakers 4 according to the priority 40 order." *Id.*, 3:33-41. Figures 1 and 2, below, show this priority determination and announcement system.

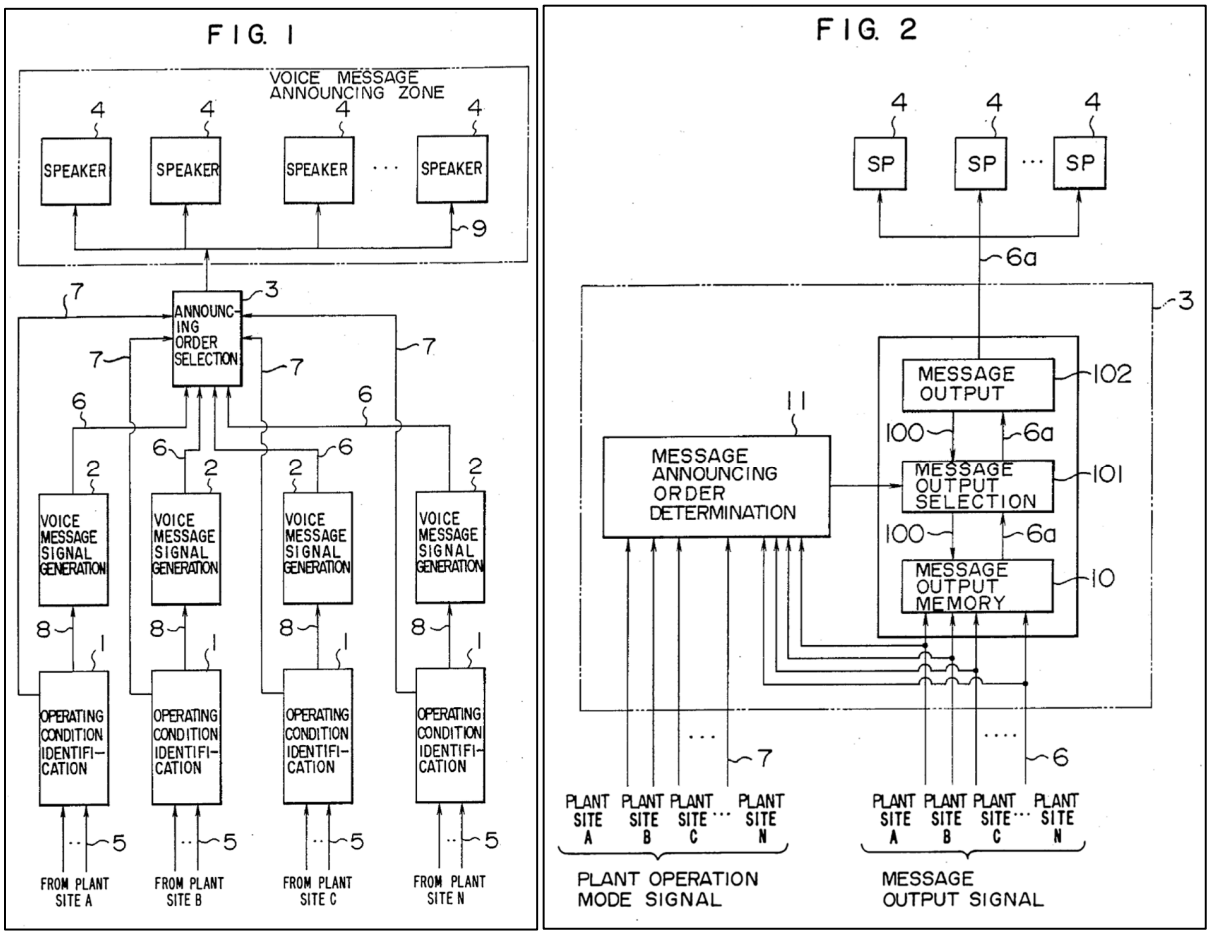

Ex[1007], Figs. 1-2.

108. Nigawara's Figure 3 discloses the procedure used to determine message priority. The determination process considers message type, content, and plant operation mode, as well as whether or not there is already another overlapping message announcement demand.

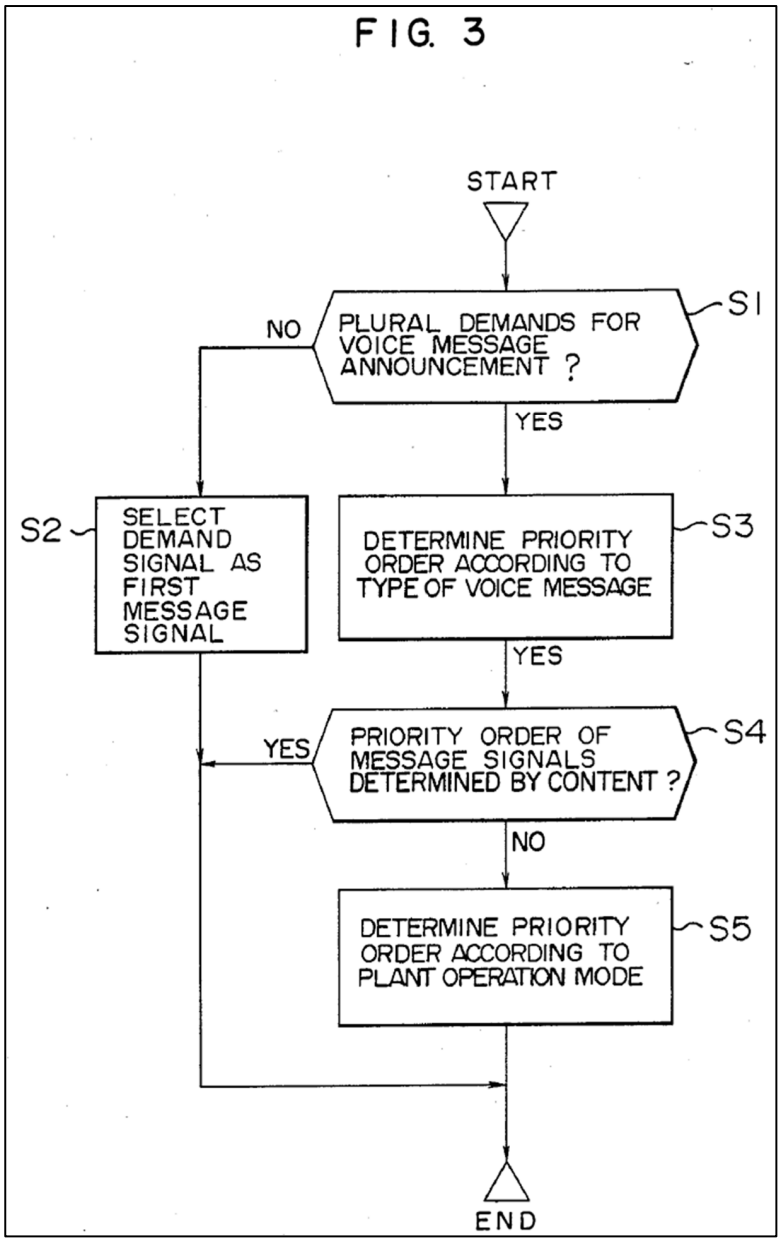

Ex[1007], Fig. 3.

109. The end result of this system, as shown in Figures 4A and 4B below, is nearly identical to the result shown by Figure 4 of the '802 Patent. Whereas in Figure 4A there are overlapping messages that result in intermixed, and likely confusing, audio announcements, Figure 4B depicts "those voice message signals

having priority lower than the others are announced 25 with a suitable delay according to the priority order, so as to solve the problem of intermixture of announced messages." *Id.*, 7:24-28. This solution is implemented in the same way as depicted in FIG.4 of the '802 patent.

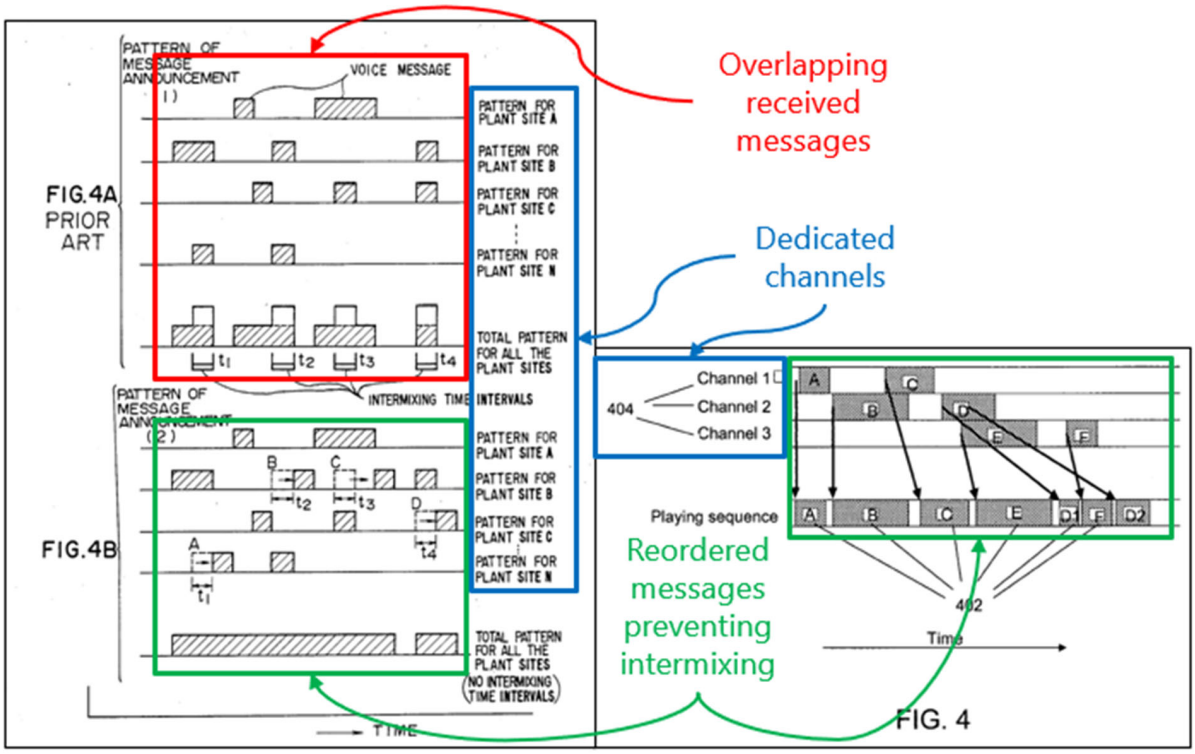

Ex[1007], Figs. 4A-4B; Ex[1001], Fig. 4 (annotated).

C. Doolin (Ex[1008])

1. Status of Doolin

110. U.S. Patent Publication No. 2006/0176169 A1 ("Doolin") is entitled "System for Sensing Environmental Conditions." Doolin was filed December 16, 2005, with priority to a provisional application filed December 17, 2004, and

published August 10, 2006. Ex[1008], Cover. The Doolin Provisional (Ex[1009]) provides support under the subject matter I have relied on, as shown in the table below, and therefore is entitled to its priority date, which is more than one year before the January 20, 2005 priority date of the '802 Patent. I understand from counsel for Petitioner that Doolin qualifies as prior art under at least pre-AIA 35 U.S.C. §§ 102(a), (b) and (e).

2. Doolin's Priority Date

111. Doolin is entitled to the earlier filing date of the Doolin Provisional (Ex[1009]) because Doolin claims priority to its provisional, and a POSITA would have understood that the Doolin Provisional provides support under 35 U.S.C. §112(a) for claim 1 of Doolin, as well as the subject matter relied on in this Petition, as shown in the tables below. Ex[1008], code (60); Ex[1010], p.54-89.

Doolin's Claim 1		**Doolin Provisional (Ex[1009])**
1[pre]	A system for monitoring a fire, the system comprising:	A system for monitoring a fire, the system comprising: Ex[1009], p.8 (cl. 7); *see also* [11].
1[a]	a plurality of devices coupled via a network, each with a plurality of sensors;	a plurality of devices, each with a plurality of sensors; Ex[1009], p.8 (cl. 7); *see also* [11]-[14]. Sensor data is sampled and communicated to a base station for relay to a computer processing system such as a collection of servers and clients *interconnected with a network*.

		Ex[1009], p.10 (Abstract).
1[b]	a base station for communicating with the devices;	a base station for communicating with the devices; Ex[1009], p.8 (cl. 7); *see also* [14].
1[c]	a processing system for receiving data from the sensors via the base station; and	a processing system for receiving data from the sensors via the base station; and Ex[1009], p.8 (cl. 7); *see also* [13]-[14].
1[d]	a process executing on one or more of the devices for organizing a flow of data from the devices to the base station after deployment of the devices.	a process executing on one or more of the devices for organizing a flow of data from the devices to the base station after deployment of the devices. Ex[1009], p.8 (cl. 7); *see also* [14]-[15].

112. Further, the Doolin Provisional provides support under 35 U.S.C. §112(a) for the subject matter of Doolin that is relied on to show that the challenged claims of the '802 Patent would have been obvious. The following table shows representative support in the Doolin Provisional for the features of Doolin relied on in the obviousness analysis herein:

'802 claims in which concept appears	**Concept/portion relied on from Doolin (Ex[1008])**	**Doolin Provisional (Ex[1009])**
1[a]	[0017], [0026], [0042], Figure 1	[10], [14], [18], Figure 1
1[b]	[0017], [0026], [0042]	[10], [14], [18]
3	[0009], [0041]	[15], cl. 6
8	[0042]	[10]
9	[0026], [0039]	[10], [18], cls. 14, 17

10	[0017], [0026], [0040], Figure 1	[10], [14], [18], Figure 1

3. Overview of the Disclosure of Doolin

113. Doolin discloses a remote monitoring system in which "sensor network 10 implements a network wherein a processing system 14, 62, 66 receives data from the sensors 104-110, one or more of which are assigned one or more priority values via the browser client 66." Ex[1008], [0060].

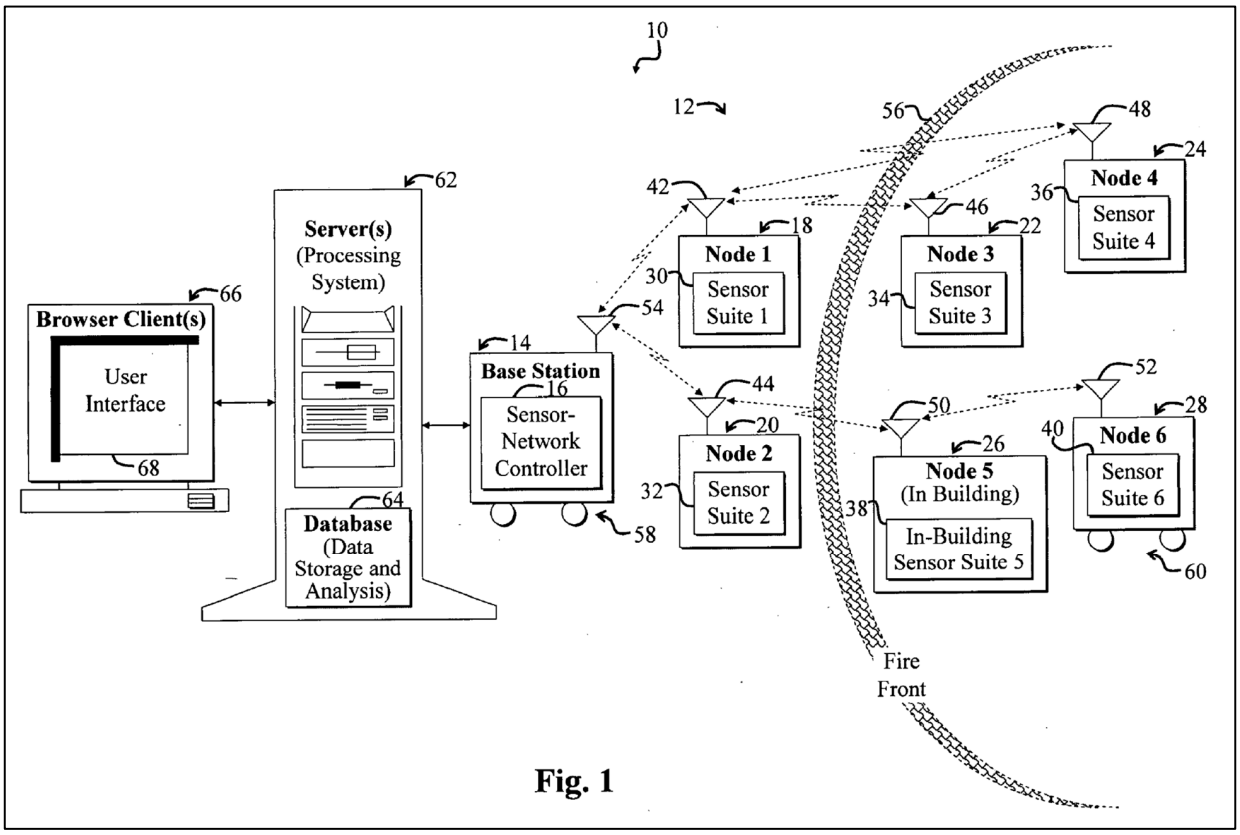

Fig. 1

Ex[1008], Fig. 1.

114. Doolin teaches that "[t]he processing system 14, 62, 66 receives the sensed data 124 according to the one or more priority values." *Id.*, [0060]. These priority values may be "based on bandwidth, sensor communication capabilities, or other factors associated with the sensors." *Id.*, [0009]. Therefore, sensor data "can be prioritized so that if there is a lack of resources (e.g., limited bandwidth), the sensor readings with higher priority can be communicated first. Data of sensor types with lower priority can be buffered and transmitted when there is free bandwidth at a later time or discarded and not sent at all. If a node starts to become low on power, sensors with higher priority can remain active while lower priority sensors are shut down." *Id.*, [0041].

115. Doolin teaches transmitting these data messages via "the antennas 42-54 may represent Radio Frequency (RF) transceivers, laser transceivers, or other types of wireless communications mechanisms." *Id.*, [0017]. This includes "long range communication such as radio or cell phone" (*id*., [0026]) as well as "infrared, laser, hardwired or other arrangement" sending the messages using "[p]rotocols such as session initiation protocol (SIP), Internet protocol (IP), hypertext transfer protocol (HTTP), etc." *Id.*, [0042].

IX. APPLICATION OF THE PRIOR ART TO THE CHALLENGED CLAIMS

116. I have been asked to provide my opinion as to whether the Challenged Claims of the '802 Patent would have been obvious in view of the prior art. The discussion below provides a detailed analysis of how the prior art references I reviewed disclose, teach, or suggest the limitations of the Challenged Claims of the '802 Patent.

117. As part of my analysis, I have considered the scope and content of the prior art and any potential differences between the claimed subject matter and the prior art. I have conducted my analysis as of the filing/priority date of the '802 Patent: January 20, 2005. I have also considered the level of ordinary skill in the pertinent art as of that date.

118. Below, I describe in detail the scope and content of the prior art, as well as any differences between the subject matter claimed and the prior art, on an element-by-element basis for each challenged claim of the '802 Patent. The analysis supports my finding that the differences between the claims of the '802 Patent and the prior art discussed herein are such that the subject matter as a whole would have been obvious at the time of the priority date of the '802 Patent to a POSITA.

119. In the grounds below, I describe on an element-by-element basis how the prior art discloses or teaches all elements of Claims 1-21 of the '802 Patent.

A. Grounds of Unpatentability

120. I have reviewed and analyzed the prior art references and materials listed in Section III above. In my opinion, the Challenged Claims of the '802 Patent are rendered obvious based on the following prior art set forth in Grounds 1-3 below:

Ground	'802 Patent Claims	Basis for Challenge
1	1-21	Obvious under §103 based on Ohel
2	1-7, and 11-21	Obvious under §103 based on Nigawara
3	3, and 8-10	Obvious under §103 based on Nigawara in view of Doolin

B. Ground 1: Claims 1-21 are obvious over Ohel.

1. Claim 1

121. Ohel discloses or at least renders obvious *a method of managing communication in a communication system, the communication system receiving messages from a plurality of channels, the method comprising: receiving a first message on a first dedicated channel from amongst the plurality of channels at the communication system, the plurality of channels being dedicated to different entities, the first dedicated channel being dedicated to receiving messages from a first entity;*

receiving a second message on a second dedicated channel being dedicated to receiving messages from a second entity from amongst the plurality of channels at the communication system, the second message overlapping with the first message in time; determining one or more priorities for the first message received on the first dedicated channel from the first entity and the second message received on the second dedicated channel from the second entity based on at least one pre-defined parameter; determining which message out of the first message and the second message should be stored and subsequently played based on the second message overlapping with the first message in time and one or more priorities assigned to the first and the second message; playing the message having a higher priority between the first and the second message; storing at least one message having a lower priority between the first and the second message based on the determination; and playing the stored message subsequent to completing playing of the message having higher priority.

a. 1[Pre]: A method of managing communication in a communication system, the communication system receiving messages from a plurality of channels, the method comprising:

122. If the preamble is limiting, Ohel discloses "*[a] method of managing communication* [e.g., receiving, transmitting, recording, and playing back data*] in a communication system, the communication system receiving messages from a*

plurality of channels [e.g., messages received by transceiver units 2-8]." Ex[1004], Abstract; *see also id.*, [0002], [0009], [0038]-[0042], [0072].

123. Ohel discloses "a method for recording data on multiple wireless communications channels" (*plurality of channels*) where in the system can "selectively record the user's transmission for playback by at least one of the user and another user and, if another new transmission starts to be received by the user during the user's transmission" (*managing communication*). Ex[1004], Abstract.

124. Thus, Ohel discloses or at least renders obvious *A method of managing communication in a communication system, the communication system receiving messages from a plurality of channels*.

b. 1[a]: receiving a first message on a first dedicated channel from amongst the plurality of channels at the communication system, the plurality of channels being dedicated to different entities, the first dedicated channel being dedicated to receiving messages from a first entity;

125. Ohel discloses or at least renders obvious "*receiving a first message on a first dedicated channel from amongst the plurality of channels* [e.g., a message received by transceiver units 2-8] *at the communication system, the plurality of channels being dedicated to different entities* [e.g., individual officers and the police dispatcher]*, the first dedicated channel being dedicated to receiving messages from a first entity* [e.g., simplex unit 2 set to a dispatch channel]."

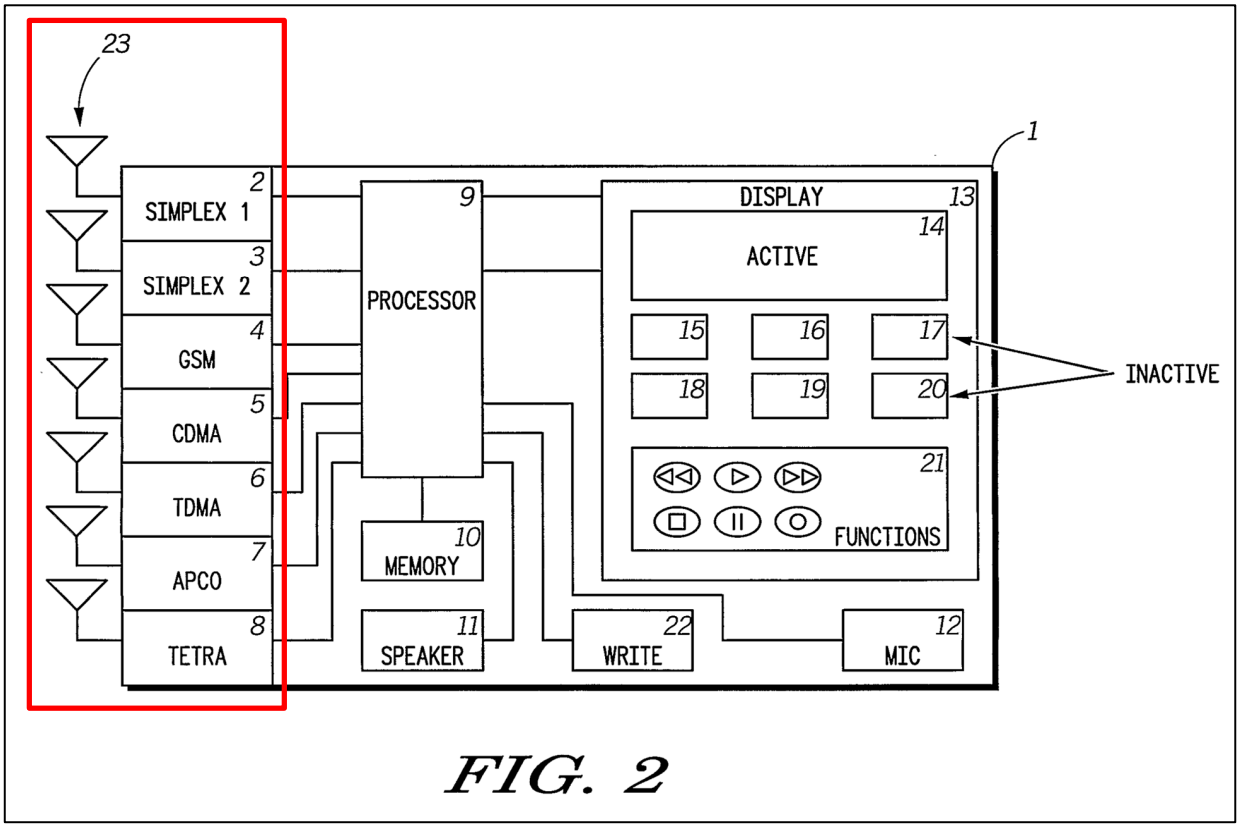

FIG. 2

Ex[1004], Fig. 2.

126. As shown above, "Fig. 2 illustrates…a user communications unit 1," also disclosed as "officer's unit 1," containing, among other things, "a multiple channel data recorder, including a plurality of wireless communications transceivers including at least one of a simplex transceiver, a CDMA transceiver, a TDMA transceiver, an AMPS transceiver, a GSM transceiver, an APCO transceiver, and a TETRA transceiver," (*plurality of channels*). Ex[1004], [0035]. "An example device that could apply this configuration is described in association with FIG. 2," shown above. *Id.*, [0059]; *see also id.*, [0060]-[0064] (describing that "[e]ach of the seven example transceiver units 2 to 8 is shown in FIG. 2 with a separate antenna

23"). Ohel describes that "[t]he unit 1 can have various combinations of similar or different transceiver units for communication over separate channels and/or networks." Ex[1004], [0060].

127. Ohel discloses that "[t]he first of the transceiver units is a first simplex communications unit 2," which "preferably operates on a given channel" and "[t]he second of the transceiver units is a second simplex communications unit 3," which operates "on a channel different from" that of the first simplex unit. Ex[1004], [0060]. Each of the channels is associated with different entities, as was well known in the art.[4] "For example, the first simplex unit 2 can be set to a dispatch channel," while "the second simplex unit 3 can be set to a particular channel of another specific user for direct, two-way communication" (*plurality of channels dedicated to different entities*). *Id*., [0060]. It would have been understood that Ohel's "dispatch channel" is a channel dedicated to communications with a dispatcher. Further, it would have been obvious to a POSITA to do so because, as the '802 Patent admits, it was known in a system, which "supports a plurality of communication channels," that "each channel may be dedicated to a

[4] The '802 Patent does not define "entities," but examples include "group/locality/unit" such as the fire department as well as "users" and "devices." Ex[1001], 1:15-21, 7:18-20.

group/locality/unit." Ex[1001], 1:15-18; *see* Ex[1013]. The additional transceivers operate in a similar fashion. Ex[1004], [0063]-[0066], [0072].

128. Ohel discloses receiving a first message on a first dedicated channel. For example, Ohel's system is able to operate in situations such as where an "officer is presently talking to another individual by cell phone over the CDMA transceiver 5," (*receiving a first message from* amongst a *plurality of channels dedicated to different entities*) and "[d]uring the conversation, the police dispatcher begins to transmit one or more messages to the officer over the APCO transceiver 7." *Id.*, [0069]; *see also id.*, Abstract, [0035]-[0036], [0042], [0046], [0060], and [0070]-[0072]. In such situations, "no information being received over the CDMA transceiver 5 would be lost because at least the officer's unit 1 would immediately start recording all information received by the CDMA transceiver 5 from the point in time when the APCO transceiver 7 took over." *Id.*, [0070].

129. Further, Ohel explains that "[t]hese examples are only two possible scenarios in a variety of many different scenarios possible with the transceiver units 2 to 8 and the display configuration 13 to 21. In each possible example, the unit 1 according to the invention provides the user with the ability to record any number of simultaneous transmissions to the user [i.e., *received messages*] without loss of information from any of the potential sources." *Id.*, [0072].

130. Thus, a POSITA would have understood that each of Ohel's transceivers 2 to 8 would operate in a similar fashion in this respect. Ex[1004], [0063]-[0066], [0072]. In other words, it would have been understood that Ohel's system is able to operate similarly when an officer is, for example, presently talking to the "another specific user" on the "particular channel" to which second simplex unit 3 is set (*receiving a first message on a first dedicated channel from amongst the plurality of channels*) and during the conversation, the police dispatcher begins to transmit one or more messages to the officer over the dispatch channel to which first simplex unit 2 is set.

131. Therefore, Ohel discloses or at least renders obvious *receiving a first message on a first dedicated channel from amongst the plurality of channels at the communication system, the plurality of channels being dedicated to different entities, the first dedicated channel being dedicated to receiving messages from a first entity*.

c. 1[b]: receiving a second message on a second dedicated channel being dedicated to receiving messages from a second entity from amongst the plurality of channels at the communication system, the second message overlapping with the first message in time;

132. Ohel discloses or at least renders obvious "*receiving a second message on a second dedicated channel being dedicated to receiving messages from a second entity* [e.g., simplex unit 3 set to another specific user] *from amongst the plurality of channels* [e.g., transceiver units 2-8] *at the communication system, the second*

message overlapping with the first message in time [e.g., second message begins to transmit while the first message is still in progress]."

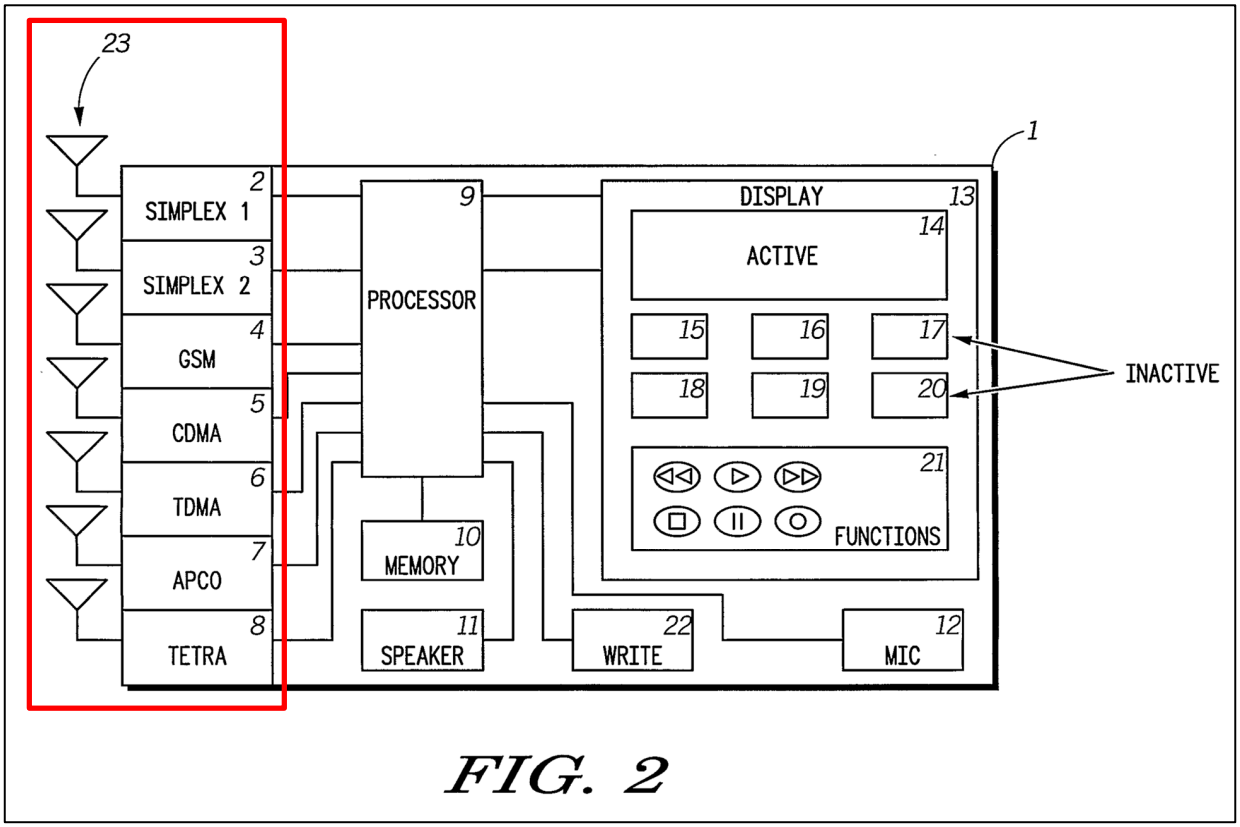

Ex[1004], Fig. 2.

133. As discussed above, Ohel discloses receiving messages on a plurality of channels and "wireless communications transceivers including at least one of a simplex transceiver, a CDMA transceiver, a TDMA transceiver, an AMPS transceiver, a GSM transceiver, an APCO transceiver, and a TETRA transceiver," (*plurality of channels*). Ex[1004], [0035]. Ohel further disclose that the simplex units "operate[] on a given channel, but can be also set to transmit/receive on

different channels selected by a user" (*plurality of channels dedicated to different entities*). Ex[1004], [0060]; *see also* Ex[1001], 1:15-18.

134. Therefore, Ohel's system is able to receive multiple overlapping messages on dedicated channels. As one example, Ohel discloses an example in which an "officer is presently talking to another individual by cell phone over the CDMA transceiver 5, (*receiving a first message*) during which conversation, information regarding the CDMA transceiver 5 is being displayed in the active display 14. The other transceiver units 2, 3, 4, 6, 7, 8, therefore, are being displayed respectively (possibly in a reduced functional form) in one of the inactive display areas 15 to 20. During the conversation, the police dispatcher begins to transmit one or more messages to the officer over the APCO transceiver 7" (*receiving a second, overlapping, message from amongst a plurality of channels dedicated to different entities*). *Id.*, [0069]; *see also id.*, Abstract, [0035]-[0036], [0042], [0046]-[0047], [0050], [0060], and [0070]-[0072]. In this example the "dispatcher, who has the ability to suppress any existing transmission between users" is "a superior user." *Id.*, [0047].

135. As previously discussed, Ohel further explains that "[t]hese examples are only two possible scenarios in a variety of many different scenarios possible with the transceiver units 2 to 8" and a POSITA would understand that each transceiver 2 to 8 would operate in a similar fashion. Ex[1004], [0063]-[0066], [0072]. Thus,

a POSITA would have understood that each of Ohel's transceivers 2 to 8 would operate in a similar fashion in this respect. Ex[1004], [0063]-[0066], [0072]. In other words, a POSITA would have understood Ohel to teach that its system is able to operate similarly when an officer is, for example, presently talking to the "another specific user" on the "particular channel" to which second simplex unit 3 is set and during the conversation, the police dispatcher begins to transmit one or more messages to the officer over the dispatch channel to which first simplex unit 2 is set (*receiving a second message on a second dedicated channel being dedicated to receiving messages from a second entity . . . the second message overlapping with the first message in time*).

136. Thus, Ohel discloses or at least renders obvious *receiving a second message on a second dedicated channel being dedicated to receiving messages from a second entity from amongst the plurality of channels at the communication system, the second message overlapping with the first message in time*.

d. 1[c]: determining one or more priorities for the first message received on the first dedicated channel from the first entity and the second message received on the second dedicated channel from the second entity based on at least one pre-defined parameter;

137. Ohel discloses "*determining one or more priorities for the first message received on the first dedicated channel from the first entity* [e.g., user transmits/receivers] *and the second message received on the second dedicated*

channel from the second entity [e.g., superior user transmission received] *based on at least one pre-defined parameter* [e.g., superior user status]."

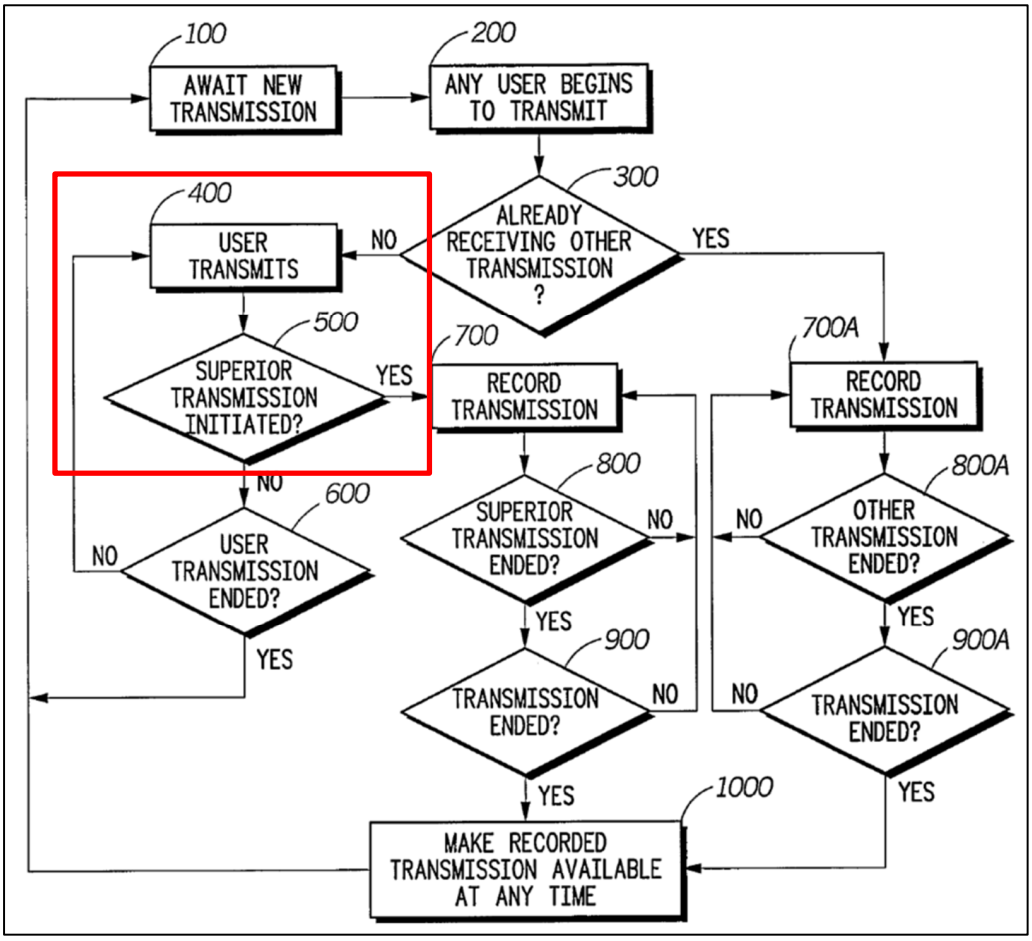

Ex[1004], Fig. 1.

138. The '802 Patent discloses that "the pre-defined parameter can be, for example, the type of radio messages, the size of the radio messages, the bandwidth requirement, the channel from which radio messages are received, or any possible combination thereof." Ex.[1001], 4:58-62.

139. Ohel provides that "[i]t is possible for the user's transmission to be interrupted, for example, by a superior user, such as a dispatcher, who has the ability to suppress any existing transmission between users and, therefore, to transmit over or instead of the currently transmitting user(s)." Ex[1004], [0047]. As illustrated in Figure 1 above, Ohel determines if an ongoing transmission is to be interrupted by a second transmission through a series of inquiries. *Id.*, [0043]-[0052]. "Specifically, an inquiry would, first, be conducted to determine if any intermediate transmission was initiated after the user's transmission began. If the answer to the inquiry is yes, then another determination would be made to see if the interrupting user is a superior user who would preempt the user's continued transmission [*predefined parameter*]. If the interrupting user is a superior user, then the user's transmission will be recorded as set forth above. However, if the interrupting user is not a superior user, then the interrupting user's message would be recorded for playback by the user or another." *Id.*, [0050]; *see also id.*, [0047], and [0070]-[0072].

140. Ohel discloses that this priority status, termed "superior user status" may be pre-defined in various ways such as by the specific transceiver type, or channel dedicated to dispatch communications, or by an "emergency indication" within the transmission. *Id.*, [0070]"

141. While Ohel primarily discusses overlapping messages in terms of transmissions, it also specifies that "the unit can record upon receipt of any communication, upon start of a new transmission, or any combination thereof," and that "the unit 1 according to the invention provides the user with the ability to record any number of simultaneous transmissions to the user without loss of information from any of the potential sources." *Id.*, [0045], [0072]. For example, Ohel teaches that when interrupted by a dispatcher transmitting over the APCO transceiver, an "officer's unit 1 would immediately start recording all information received by the CDMA transceiver 5 from the point in time when the APCO transceiver 7 took over." *Id.*, [0070]; *see also id.*, [0072] (explaining that APCO/CDMA transceiver examples is "one of many possible examples" and can be applied to "any of the potential sources"). Therefore, it would understood by a POSITA that the disclosed method applies to all messages sent or received by the unit and that each of the individual units are parts of an overall 'communication system.'

142. Thus, Ohel discloses or at least renders obvious *determining one or more priorities for the first message received on the first dedicated channel from the first entity and the second message received on the second dedicated channel from the second entity based on at least one pre-defined parameter*.

e. 1[d]: determining which message out of the first message and the second message should be stored and subsequently played based on the second message overlapping with the first message in time and one or more priorities assigned to the first and the second message;

143. Ohel discloses or at least renders obvious "*determining which message out of the first message and the second message should be stored* [e.g., record transmission] *and subsequently played* [e.g., recording made available] *based on the second message overlapping with the first message in time and one or more priorities assigned to the first and the second message* [e.g., overlapping superior user transmission initiated]."

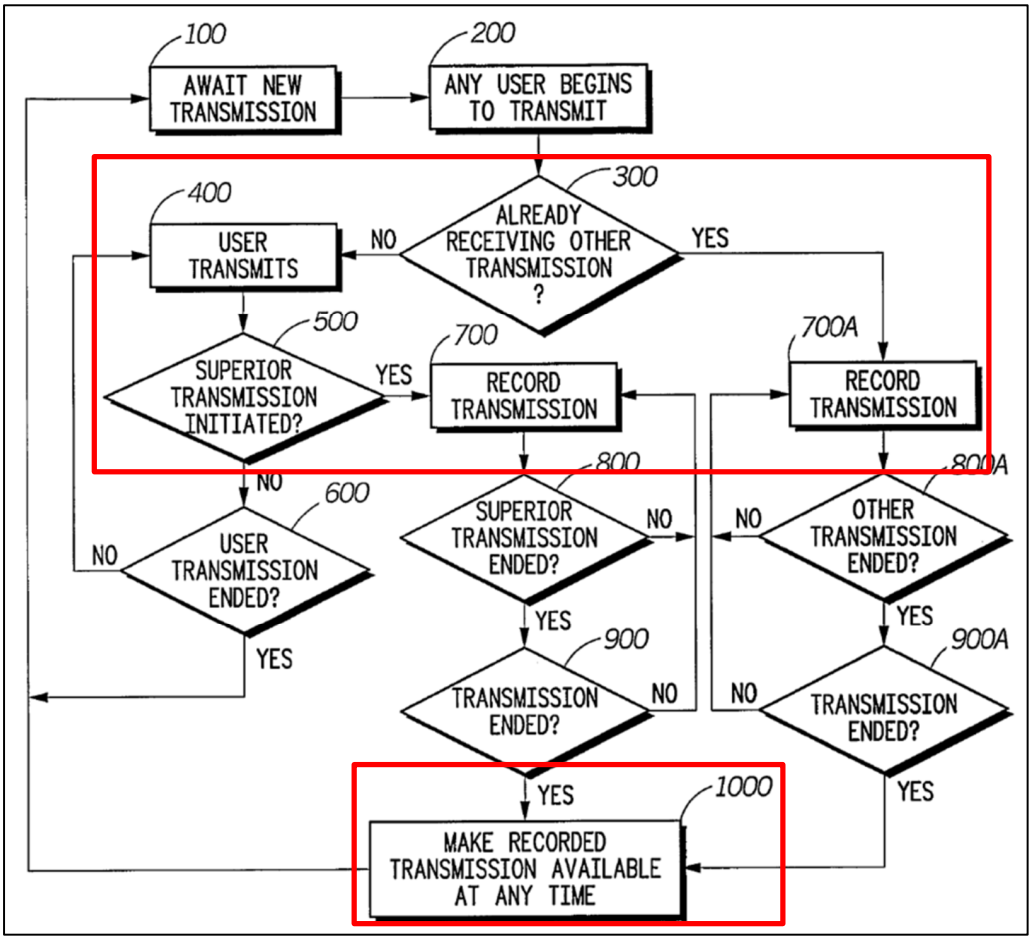

Ex[1004], Fig. 1

144. As discussed previously, Ohel assigns priorities to overlapping messages based on superior user status. *Supra* §IX.B.1.d. If one of the overlapping messages is assigned this priority, "[i]t is possible for the user's transmission to be interrupted, for example, by a superior user, such as a dispatcher, who has the ability to suppress any existing transmission between users and, therefore, to transmit over or instead of the currently transmitting user(s)." *Id.*, [0047]. Therefore, when overlapping messages are received, based on the

determined priorities, "[i]f the interrupting user is a superior user, then the user's transmission will be recorded as set forth above. However, if the interrupting user is not a superior user, then the interrupting user's message would be recorded for playback by the user or another." *Id.*, [0050]. These recordings are then made available at a later time, as illustrated in Figure 1 above. *See also id.*, Abstract, [0035]-[0036], [0048], [0050], [0055], and [0070]-[0072].

145. Thus, Ohel discloses or at least renders obvious *determining which message out of the first message and the second message should be stored and subsequently played based on the second message overlapping with the first message in time and one or more priorities assigned to the first and the second message*.

f. 1[e]: playing the message having a higher priority between the first and the second message;

146. Ohel discloses "*playing the message having a higher priority between the first and the second message*."

147. Ohel discloses that a lower priority transmission will "be interrupted, for example, by a superior user, such as a dispatcher, who has the ability to suppress any existing transmission between users and, therefore, to transmit over or instead of the currently transmitting user(s)" (*playing the message having a higher priority between the first and second message*). Ex[1004], [0047]. Alternatively, if the overlapping messages have the same priority the messages are played

chronologically without interrupting the first message: "However, if the interrupting user is not a superior user (*higher priority*), then the interrupting user's message would be recorded for playback by the user or another" while the first message is played. *Id.*, [0050]; *see also id.*, [0047], [0050], and [0070]-[0072].

148. Thus, Ohel discloses or at least renders obvious *playing the message having a higher priority between the first and the second message*.

g. 1[f]: storing at least one message having a lower priority between the first and the second message based on the determination; and

149. Ohel discloses "*storing at least one message* [e.g., recording transmissions] *having a lower priority between the first and the second message based on the determination* [e.g., superior user determination]."

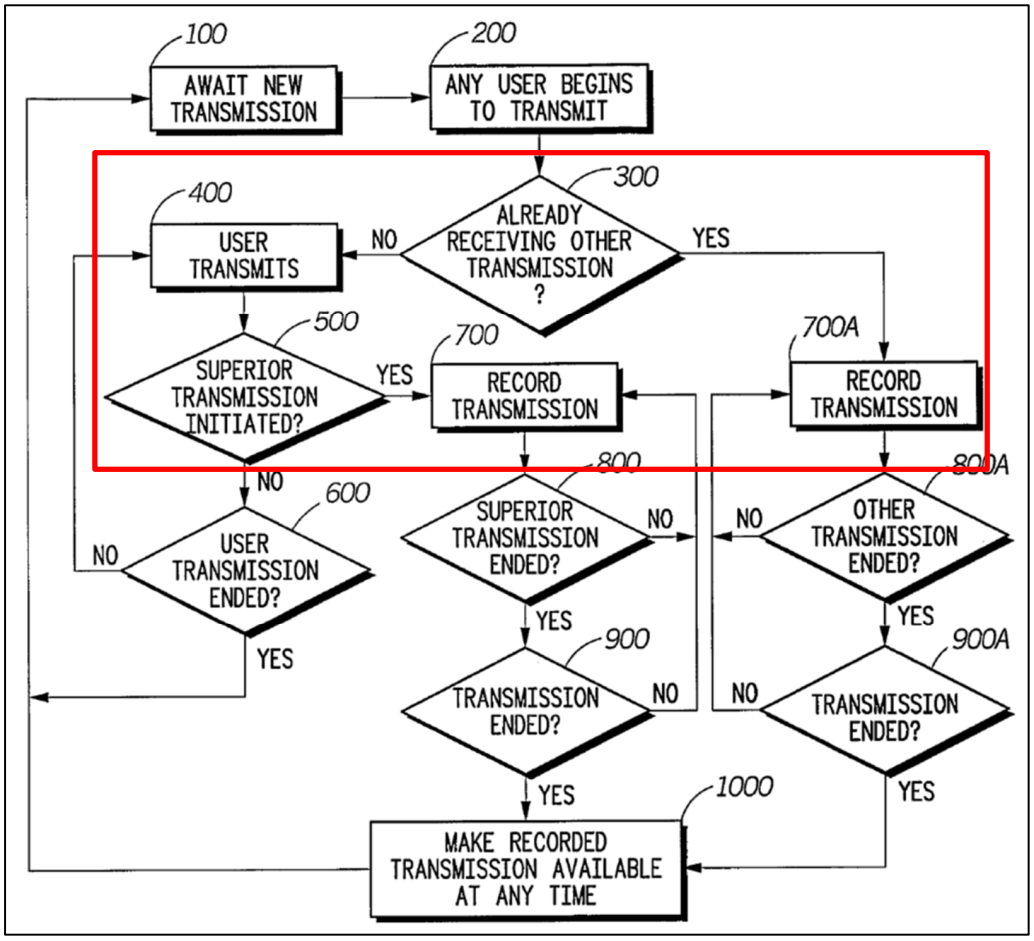

Ex[1004], Fig. 1.

150. As discussed above, Ohel discloses determining one or more priorities for the received first and second messages. *Supra* §IX.B.1.d. Ohel teaches storing at least one of the messages based on the determination. As shown in Figure 1 above, Ohel provides that the lower priority message is recorded for playback at a later time. For example, "[i]f the interrupting user is a superior user [*message having a higher priority*], then the user's transmission [*message having a lower priority*] will be recorded (*stored*) as set forth above. However, if the

interrupting user is not a superior user, then the interrupting user's message would be recorded (*stored*) for playback by the user or another." *Id.*, [0050]; *see also id.*, [0036], [0047], [0049], [0055], and [0070]-[0072].

151. Thus, Ohel discloses or at least renders obvious *storing at least one message having a lower priority between the first and the second message based on the determination*.

h. 1[g]: playing the stored message subsequent to completing playing of the message having higher priority.

152. Ohel discloses "*playing the stored message* [e.g., playing recorded transmission] *subsequent to completing playing of the message having higher priority* [e.g., superior user transmission ended]."

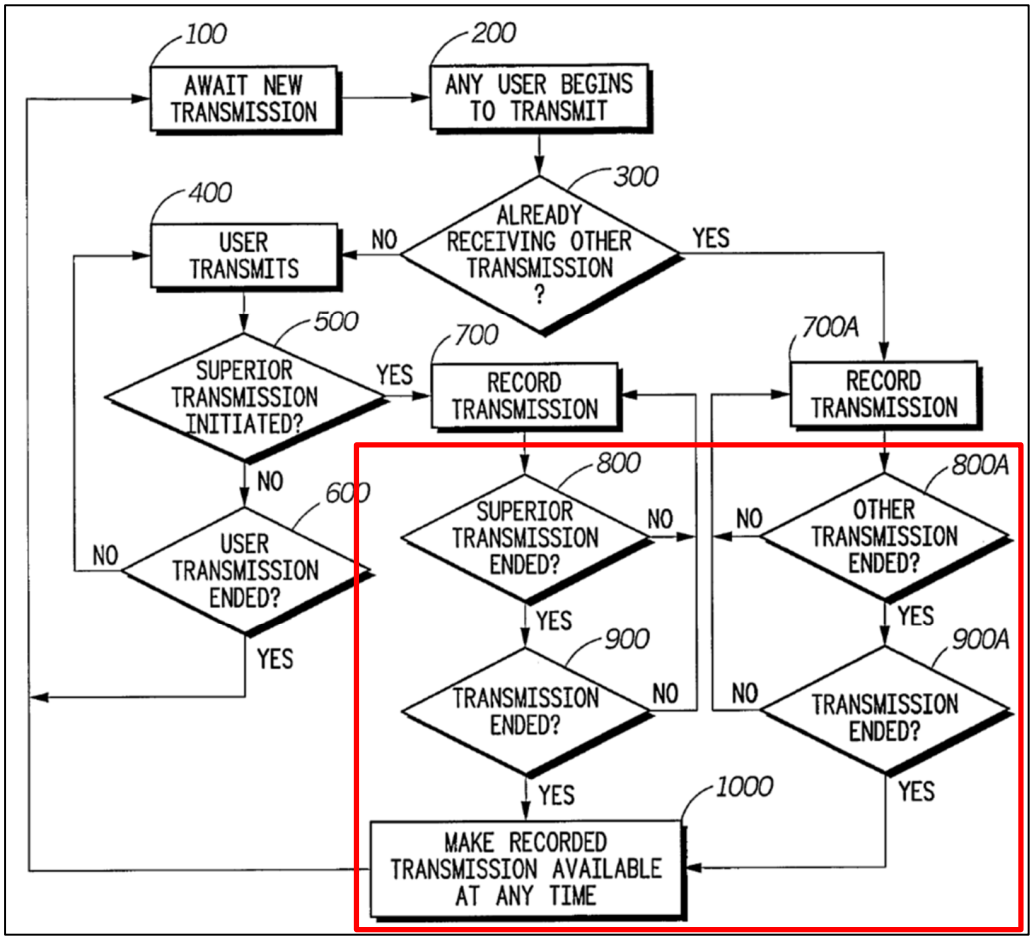

Ex[1004], Fig. 1.

153. As discussed above, Ohel discloses storing (e.g., recording) a message having a lower priority. *Supra* §IX.B.1.g. As shown in Figure 1 above, Ohel provides that "at least one of the recorded transmissions is played back after [*subsequent to*] the new wireless transmission and/or after the user's transmission has ended. Playback can begin from a starting point of a recorded transmission and/or from a user-selected point of time within a recorded transmission." *Id.*,

[0017]; *see also id.*, Abstract, [0018], [0035]-[0036], [0047], [0049]-[0050], and [0070]-[0072].

154. Thus, Ohel discloses or at least renders obvious *playing the stored message subsequent to completing playing of the message having higher priority*.

2. Claim 2

155. Ohel discloses or at least renders obvious *the method of claim 1, wherein determining which message out of the first message and the second message should be stored and subsequently played comprises: calculating the priorities of the received messages; and comparing the priorities of the received messages.*

a. 2[pre]

156. As described in §IX.B.1.e, Ohel discloses "*determining which message out of the first message and the second message should be stored and subsequently played*." *Supra* §IX.B.1.e. Thus, for all of the same reasons described for limitation 1[d] above, incorporated here, Ohel also discloses or at least renders obvious limitation *the method of claim 1, wherein determining which message out of the first message and the second message should be stored and subsequently played comprises*.

b. 2[a]: calculating the priorities of the received messages; and

157. Ohel discloses or at least renders obvious "*calculating the priorities of the received messages*."

158. Ohel makes a series of determinations in order to assess the priority of overlapping transmission, as shown in Figure 1 below. "Specifically, an inquiry [*calculation*] would, first, be conducted to determine if any intermediate transmission was initiated after the user's transmission [*first and second messages*] began [chronological *priority*]. If the answer to the inquiry were yes, then another determination [*calculation*] would be made to see if the interrupting user [*second message*] is a superior user [status *priority*] who would preempt the user's continued transmission [*first message*]." *Id.*, [0050].

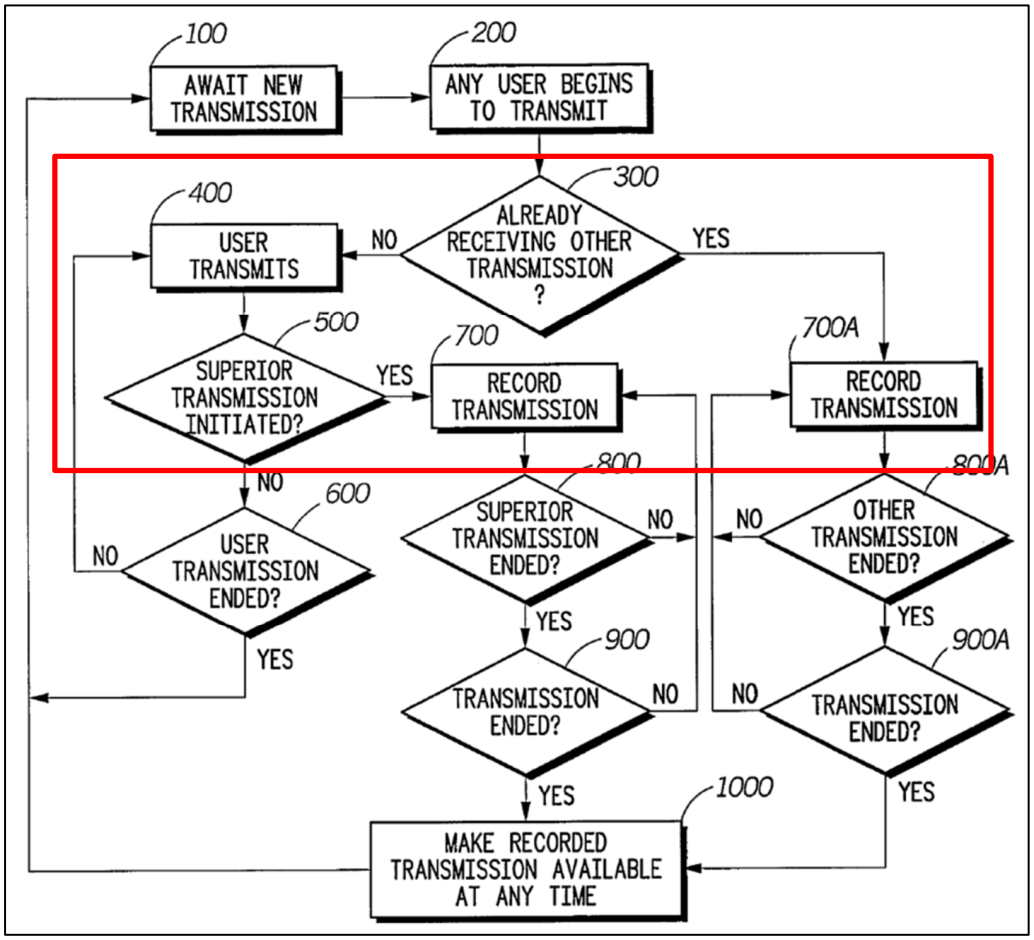

Ex[1004], Fig. 1.

159. Ohel's priority inquiries disclose or at least render obvious the claimed calculation. For chronological priority, a POSITA would have understood that the inquiry would involve calculating the difference in start time for each message. For status priority, Ohel discloses that a "predefined protocol" may be defined based on role, such as for a dispatcher, based on specific transceiver, such as "the user's APCO transceiver," or based on "an emergency indication within the transmission." Ex[1004], [0070]. A POSITA would have understood this process to involve determining each of these properties and then performing a calculation to determine their relation to the "pre-determined protocol" governing priority status. Ex[1004], [0070].

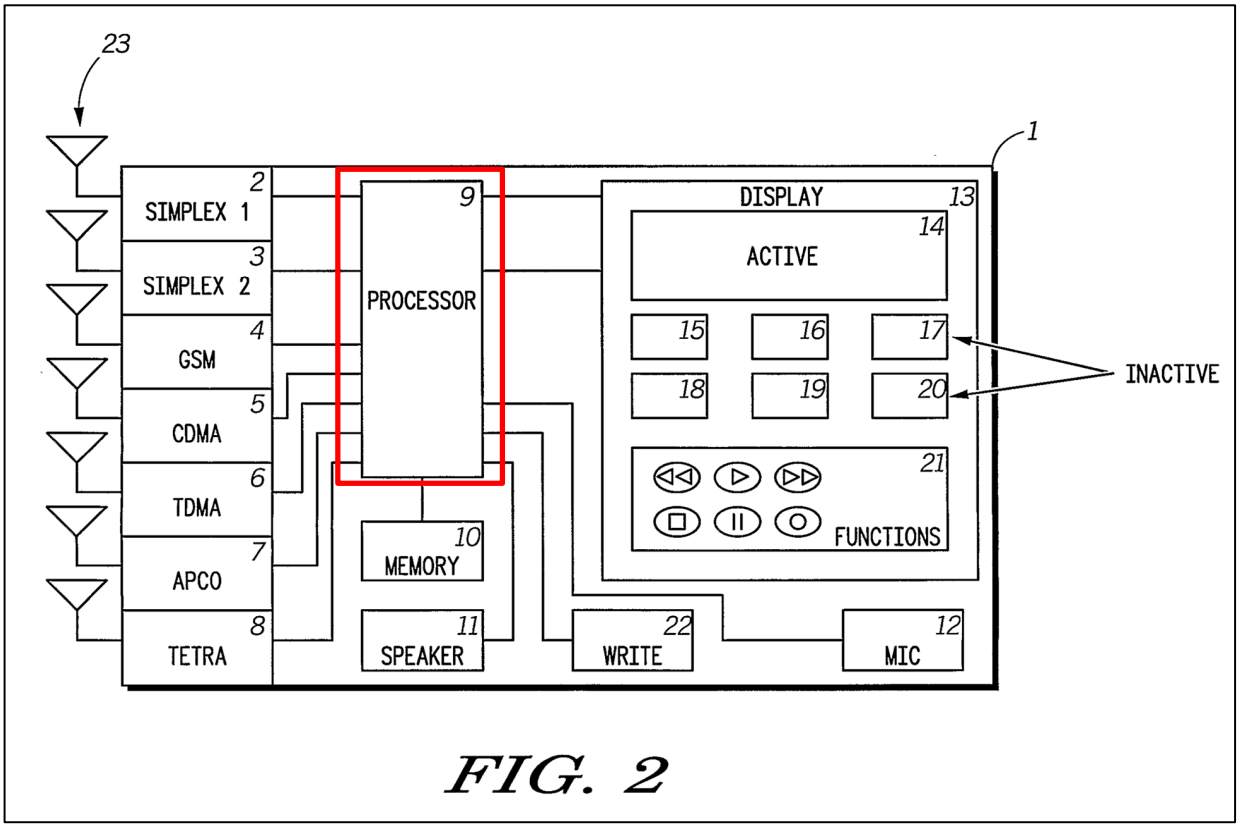

FIG. 2

Ex[1004], Fig. 2.

160. The '802 Patent only discloses "*calculating*" by stating "[p]riority calculator 516 calculates the priority of each of the received radio messages." Ex[1001], 6:15-17. Thus, Ohel discloses or at least renders *obvious calculating the priorities of the received messages*.

c. 2[b]: comparing the priorities of the received messages.

161. Ohel discloses or at least renders obvious "*comparing the priorities of the received messages* [e.g., determining superior user status]."

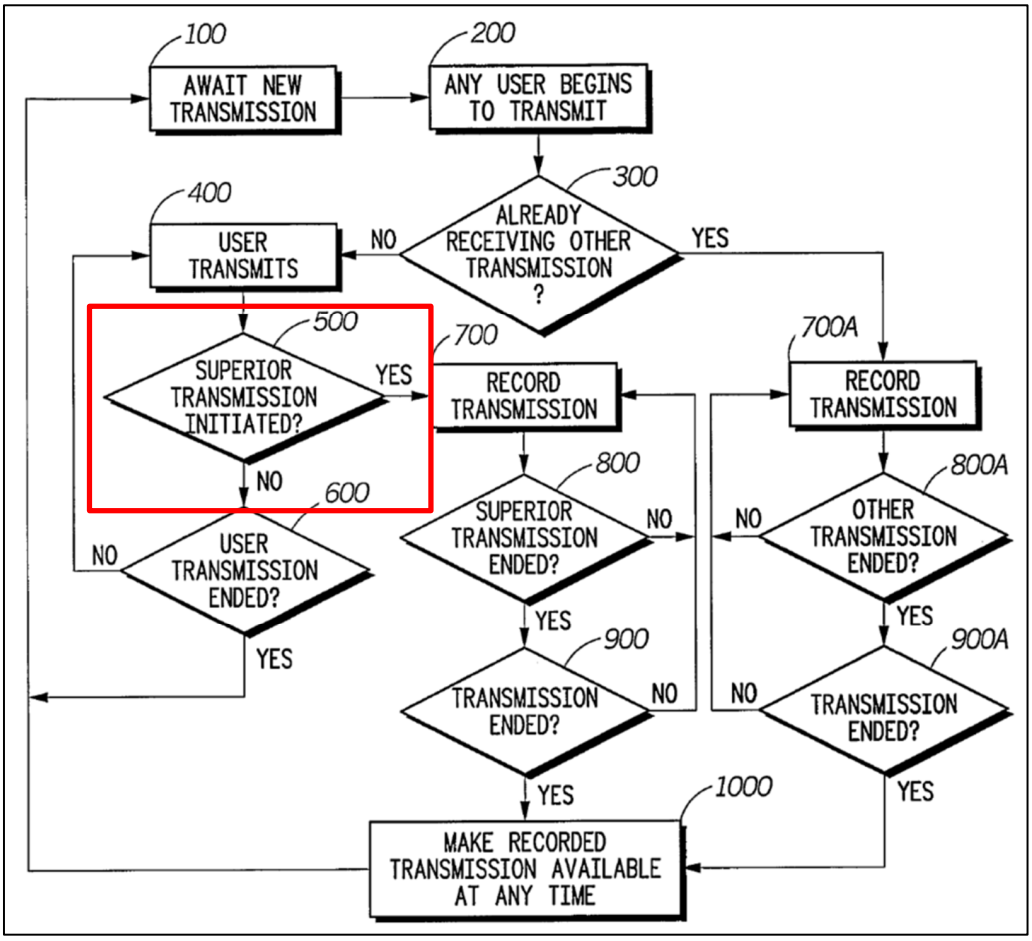

Ex[1004], Fig. 1.

162. Ohel provides that, once the priority of each message is calculated via the inquiries discussed above, "[i]f the interrupting user is a superior user, then the user's transmission will be recorded as set forth above. However, if the interrupting user is not a superior user, then the interrupting user's message would be recorded for playback by the user or another." *Id.*, [0050]. As shown by the decision point at step 500 in Figure 1 above, the *priority* of each message, such as superior user or

not, are *compared* to determine which messages should be *stored and subsequently played*. *Id*.

163. Thus, Ohel discloses or at least renders obvious *comparing the priorities of the received messages*.

3. Claim 3: The method of claim 1, wherein the predefined parameter comprises a bandwidth requirement of the received messages.

164. Ohel discloses "*the predefined parameter comprises a bandwidth requirement of the received messages*."

165. As previously discussed, one parameter Ohel discloses using to determine priority is type of transceiver the message is received on. For example, APCO transmissions, which are based on "the Association of Public Safety Communications Officials standard," for "public safety entities [to] communicate through radio," (Ex[1004], [0007]) may be prioritized over (*id.*, [0070]) CDMA transmissions, which are a form of "cellular communications." *Id.*, [0008]. A POSITA would have understood that these two standards, as well as the standards for the other four transceivers shown in Figure 2 above, all have different bandwidth requirements that could be used as predefined parameters when defining the priority protocol and therefore Ohel's prioritization parameter comprises a bandwidth requirement (the requirement associated with the prioritized channel).

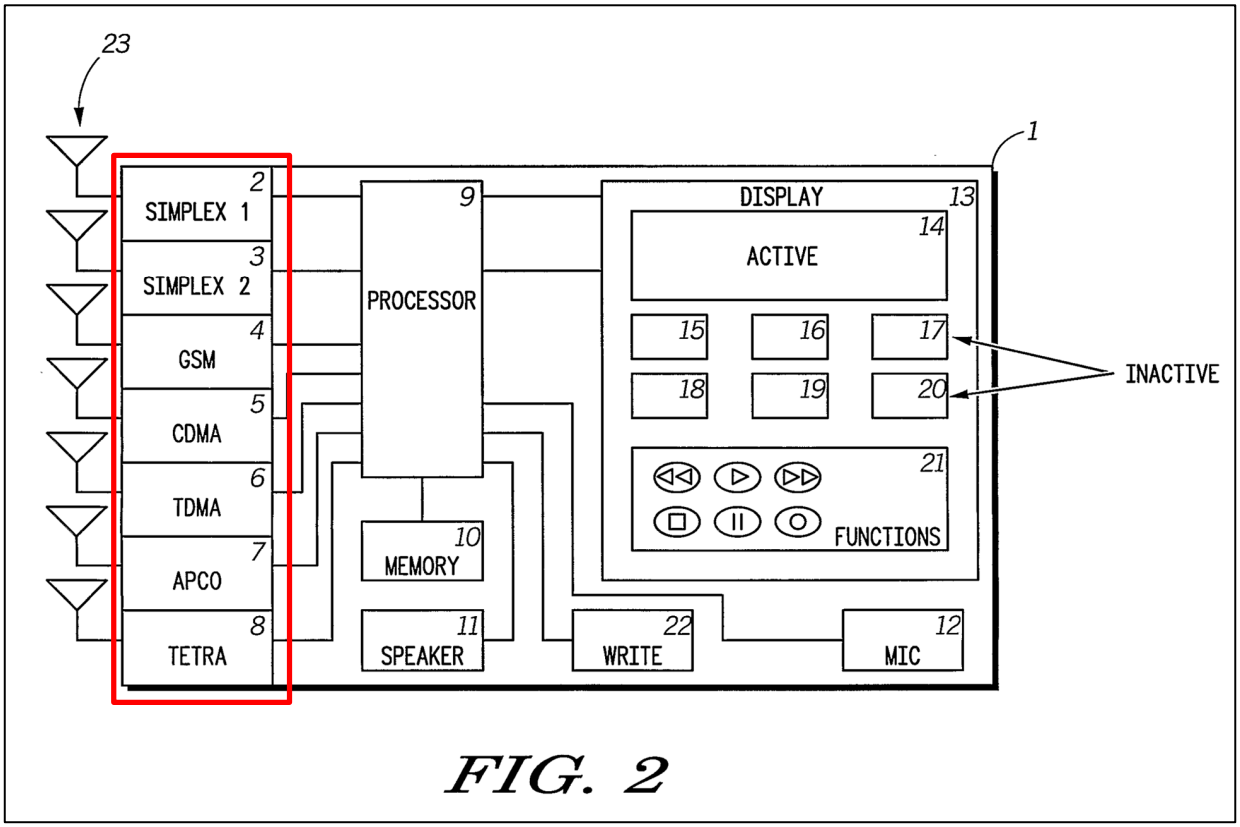

FIG. 2

Ex[1004], Fig. 2.

166. Additionally, Ohel provides that the "wireless transmission can be digital data, including, but not limited to code, an audio signal, an image, and a video stream." Ex[1004], [0016]. Similarly, a POSITA would have understood that these different types of digital data all have different bandwidth requirements that would be appropriate to use as predefined parameters when defining the priority protocol and therefore Ohel's prioritization parameter comprises a bandwidth requirement (the requirement associated with the types of digital data). This is similar to the only disclosure of "*a bandwidth requirement*" in the '802 Patent, which is its inclusion, without definition in a list of possible pre-defined parameters.

167. Thus, Ohel discloses or at least renders obvious *the predefined parameter comprises a bandwidth requirement of the received messages*.

4. Claim 4: The method of claim 1, wherein the predefined parameter comprises a type of the received messages.

168. Ohel discloses or at least renders obvious "*the predefined parameter comprises a type of the received messages*".

169. Ohel discloses using multiple predefined parameters to determine the priority of the transmissions, including the type of the received message. For example, one such type of received message is prioritizing "APCO transceiver" messages over CDMA. Ex[1004], [0070]. Additionally, message types may be indicated by a user, such as a superior user (e.g., dispatcher) transmission being prioritized over those of other users. *Id.*, [0005], [0047], [0070]. Furthermore, Ohel discloses that message type may be indicated via "an emergency indication within the transmission," thus allowing emergency transmissions to be prioritized over other messages. *Id.*, [0070].

170. A POSITA would have understood that APCO, dispatcher, and emergency transmissions all represent various message "types" that are used to determine the superior user status (*priority*) of a received message.

171. Thus, Ohel discloses or at least renders obvious *the predefined parameter comprises a type of the received messages*.

5. Claim 5: The method of claim 4, wherein the type of received messages being one of a group comprising audio, video, text, and image.

172. Ohel discloses or at least renders obvious "*the type of received messages being one of a group comprising audio, video, text, and image*".

173. As previously discussed, Ohel discloses using multiple predefined parameters to determine the priority of the transmissions, including the type of the received message. *Supra* §IX.B.4. For example, one such type of received message is prioritizing "APCO transceiver" messages over CDMA. Ex[1004], [0070]. APCO is a public safety radio standard. *Id.*, [0007]. A POSITA would have understood that APCO to be an audio-based standard. Thus, a POSITA would have understood prioritization of messages based on use of the APCO transceiver to be prioritizing received messages based on being audio-type messages.

174. Thus, Ohel discloses or at least renders obvious *the type of received messages being one of a group comprising audio, video, text, and image*.

6. Claim 6: The method of claim 1, wherein determining the priority comprises assigning priorities to the first message and the second message based on inputs from a user.

175. Ohel discloses or at least renders obvious "*determining the priority comprises assigning priorities to the first message and the second message based on inputs from a user*" in at least two ways.

176. First, Ohel discloses that "the dispatcher can have an emergency indication within the transmission that forces the officer to listen regardless of the officer's decision to listen at that time." Ex[1004], [0070]. The presence or absence of an "emergency indication" is one example of priority parameters used to assign priorities to messages disclosed by Ohel. Based on Ohel's disclosure that "the dispatcher can have an emergency indication within the transmission," a POSITA would have understood that the determination of priority based on the presence or absence of an "emergency indication" is "based on inputs from a user" (e.g., the dispatcher).

177. Second, Ohel discloses the use of a "predefined protocol" to determine (*assign*) priorities of the first message and the second message. For example, "if the predefined protocol has been defined to force the officer to immediately listen to the dispatcher, then, all communication over the user's CDMA transceiver 5 would be preempted by the user's APCO transceiver 7." Ex[1004], [0070]. A POSITA would have understood that, in the context of Ohel's computer-implemented system, the predefined protocol used to assign priorities would be "based on user inputs." For example, user input would be involved in defining the protocol, such as choosing between a "predefined protocol" that "force[s] the officer to immediately listen to the dispatcher" (Ex[1004], [0070]) or a "predefined protocol" that "has been defined not to force the officer to immediately listen to the dispatcher." *Id.*, [0071].

178. Thus, Ohel discloses or at least renders obvious *determining the priority comprises assigning priorities to the first message and the second message based on inputs from a user*.

7. Claim 7: The method of claim 1, further comprising informing an operator the time of receipt of a message while playing the first message and the second message.

179. Ohel discloses "*informing an operator the time of receipt* [e.g., time stamp] *of a message while playing the first message and the second message* [e.g., via display 13]."

180. Ohel teaches that "[t]he communications unit applying the method according to the invention can be programmed to start recording at any time or to record a time stamp at any time." Ex[1004], [0045]. This "time stamp" is "a flag at the point in time when a superior user's transmission is detected," which indicates the "point of time during the user's transmission at which the superior user's transmission started interrupting the user's transmission." *Id.*, [0048]. Thus, Ohel discloses "the unit would record…from the time at which the user switched" between calls, and that "[i]f recording were continuous for all calls, then recording would be flagged at the time at which the user switched" between them. *Id.*, [0055].

181. Additionally, Ohel provides, as shown in Figure 2 below, "display 13" which is "configured to display information according to a given user's preferences."

Ex[1004], [0065]. This may include "a separate display sections for each of the transceiver units 2 to 8" with a larger section 14 dedicated to "the one active transceiver unit" and smaller sections for the "six other inactive sections 15, 16, 17, 18, 19, 20." *Id.* Further, Ohel discloses that "[t]he display 13 can also contain a functional display section 21, which contains areas for performing various functions related to stored information regarding the various transceiver units 2 to 8." *Id.*, [0066]. "For example, if audio information is being played with regard to the active display 14, then the following functions would be useful: play, stop, rewind, fast forward, pause, record, and go to a specified time stamp." *Id.*, [0066].

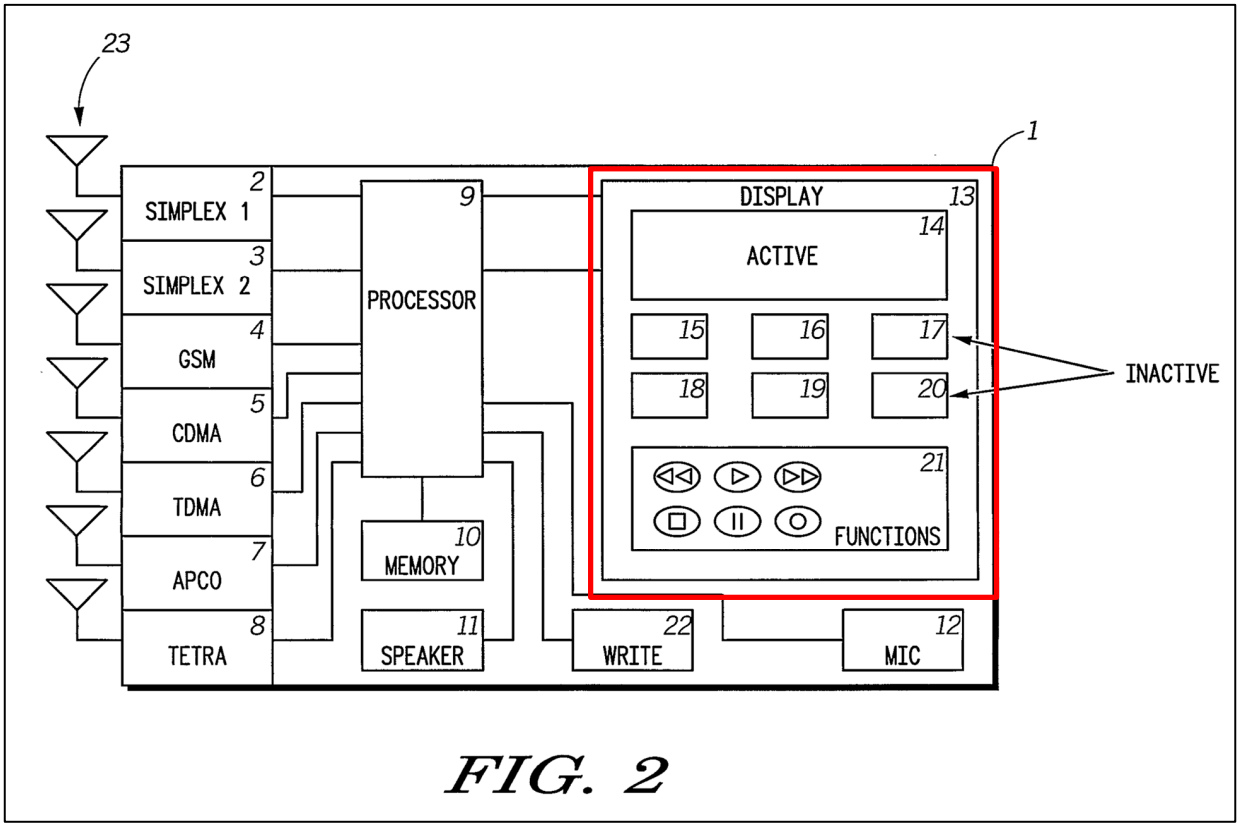

FIG. 2

Ex[1004], Fig. 2.

182. Therefore, it would be obvious to a POSITA in view of Ohel's disclosure to *inform an operator the time of receipt of a message* (e.g., time stamp) *while playing the first and the second message* (e.g., on Ohel's display).

183. Thus, Ohel discloses or at least renders obvious *informing an operator the time of receipt of a message while playing the first message and the second message*.

8. Claim 8: The method of claim 1, wherein a message includes voice over internet protocol communications.

184. Ohel discloses "*a message includes voice over internet protocol communications*."

185. Ohel discloses that "wireless transmission[s]," conveying "data, including, but not limited to, voice, code, pictures, and video," can be used to "communicate with other individuals or entities via cell phone using any of the three cell phone transceivers 4, 5, or 6." Ex[1004], [0016], [0042], [0068]. Further it had long been known in the art to implement "a mobile/wireless phone" via voice over IP as an "individual network entit[y]" in "[a]n IP Telephony Emergency Connections (ITEC) system," as evidenced by prior art such as Stumer. Ex[1014], [0013], [0036]. Thus, it would be obvious to a POSITA to have *a message* sent at least via one of Ohel's cell phone transceivers that *include voice over internet protocol communications* and would expect success in modifying Ohel's system to

use voice over IP in implementing the cell phone connections to the system, as was typical in other prior art IPTEC systems, similar to Ohel's.

186. Thus, Ohel discloses or at least renders obvious *a message includes voice over internet protocol communications*.

9. Claim 9: The method of claim 1, wherein a message includes mobile phone communications.

187. Ohel discloses "*a message includes mobile phone communications* [e.g., transceivers 4-6]."

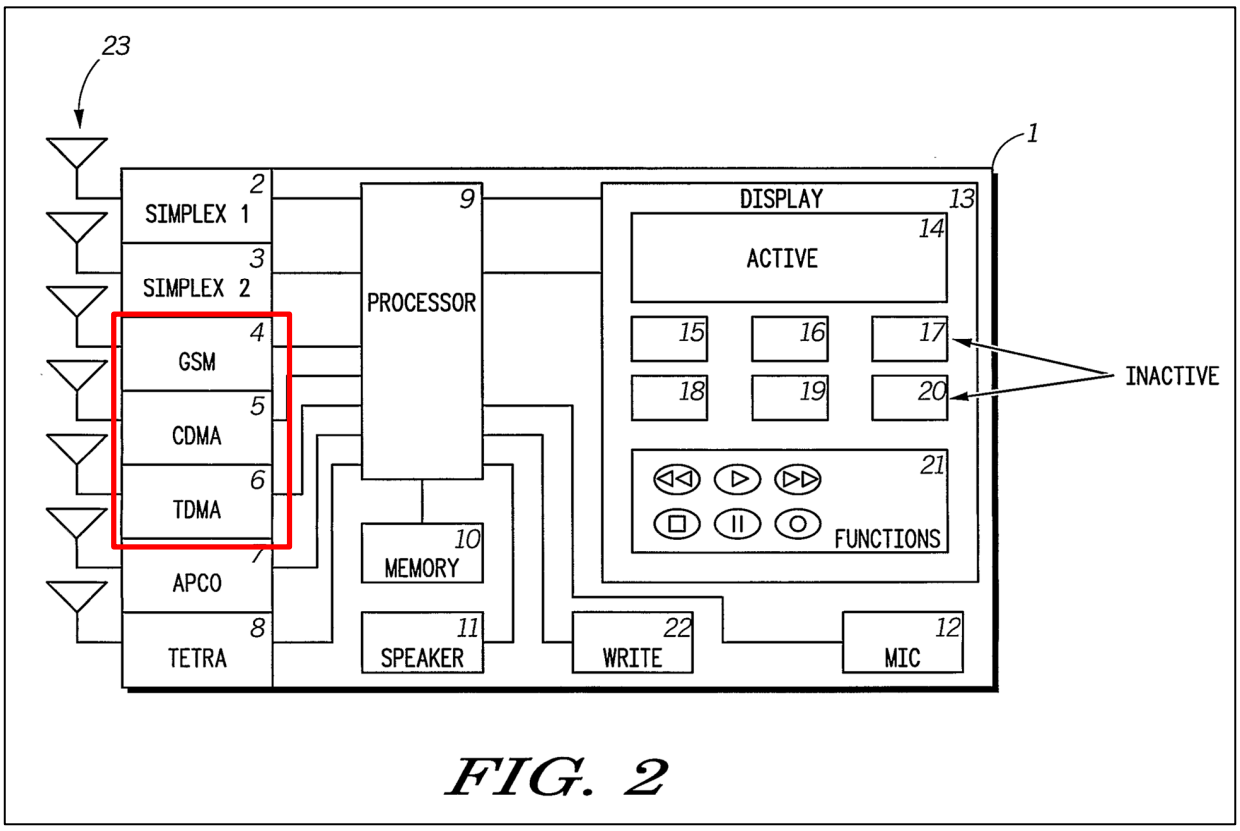

FIG. 2

Ex[1004], Fig. 2.

188. As shown in Figure 2, Ohel enables a user to "communicate with other individuals or entities via cell phone using any of the three cell phone transceivers 4, 5, or 6." Ex[1004], [0068]. Each of these transceivers corresponds to a cellular communication standard such as the "Code Division Multiple Access (CDMA), the Advanced Mobile Phone System (AMPS), and the Global System for Mobile Communication (GSM) standards." *Id.*, [0008]. Ohel discusses an example where an "officer is presently talking to another individual by cell phone over the CDMA transceiver 5." *Id.*, [0069].

189. Thus, Ohel discloses or at least renders *obvious a message includes mobile phone communications*.

10. Claim 10: The method of claim 1, wherein a message includes radio communications.

190. Ohel discloses "*a message includes radio communications* [e.g., transceivers 2-3, and 7-8]."

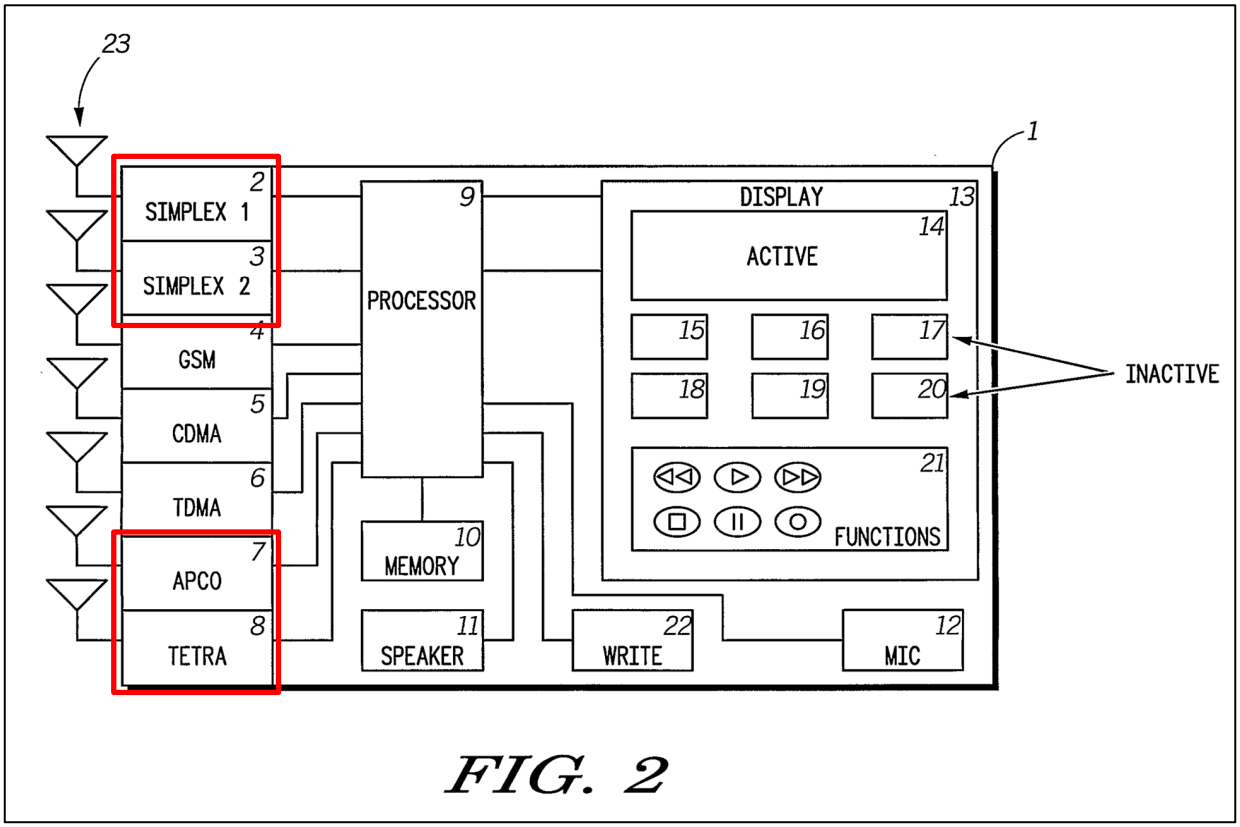

FIG. 2

Ex[1004], Fig. 2.

191. As shown in Figure 2, Ohel discloses using two simplex transceivers as well as APCO and TETRA transceivers. Each of these transceivers is designed for radio messages, allowing "[c]ommunication with the police dispatcher…over one of the public safety transceivers 7, 8 or by radio through one of the simplex transceiver units 2, 3." Ex[1004], [0068]. Further, APCO is based on "the Association of Public Safety Communications Officials standard," for "public safety entities [to] communicate through radio," while TETRA stands for "the Terrestrial Trunked Radio Standard," popular in the European Union. *Id.*, [0007].

192. Thus, Ohel discloses *a message includes radio communications*.

11. Claim 11: A method of managing communication in a communication system, the communication system receiving messages from a plurality of channels, the method comprising: receiving a first message on a first dedicated channel from amongst the plurality of channels at the communication system, the plurality of channels being dedicated to different entities, the first dedicated channel being dedicated to receiving messages from a first entity; receiving a second message on a second dedicated channel being dedicated to receiving messages from a second entity from amongst the plurality of channels at the communication system, the second message overlapping with the first message in time; prioritizing the first and second messages based on at least one predefined parameter; determining which message out of the first message and the second message should be stored and subsequently played based on the second message overlapping with the first message in time and one or more priorities assigned to the first and the second message; playing the message having the highest priority; storing the message having lower priority in a queue on the basis of the determination and the prioritization; checking periodically the status of the message being played; and playing the stored message having the highest priority.

193. Claim 11 is nearly identical to claim 1, with only a few minor differences. First, claim 11 recites "*prioritizing the first and second messages based on at least one predefined parameter*," instead of "*determining one or more priorities for the first message received on the first dedicated channel from the first entity and the second message received on the second dedicated channel from the second entity based on at least one pre-defined parameter*." Second, claim 11 recites "*storing the message having lower priority in a queue*." Third, claim 11 recites "*checking periodically the status of the message being played*." Ex[1001],

cls. 1, 11; *Bancorp Sercs., LLC, v. Sun Life Assur. Co. of Canada (U.S.)*, 687 F.3d 1266, 1277 (Fed. Cir. 2012)(asserted system and medium claims treated as no different from the asserted method claims). Ohel discloses these additional features of claim 11.

194. The multiple channel data recorder, disclosed by Ohel, "provides the user with the ability to record any number of simultaneous transmissions to the user without loss of information from any of the potential sources." Ex[1004], [0072].

195. Ohel accomplishes this via "a dynamic memory device permitting substantially simultaneous recording and playback." *Id.*, [0049]. Then, "[w]hen a transmission is recorded, the transmission can be made available to users for playback (*see* step 1000) any time after recording begins." *Id.*, [0052]. A POSITA would have understood that the dynamic memory device is where all of the number of simultaneous transmissions would be stored. A POSITA would further have understood that a queue is one well known, practical way to store multiple messages in a single memory device.

196. Finally, as shown in Figure 1 below at 700-900 and 700A-900A, Ohel discloses routinely "*checking periodically the status of the message being played*."

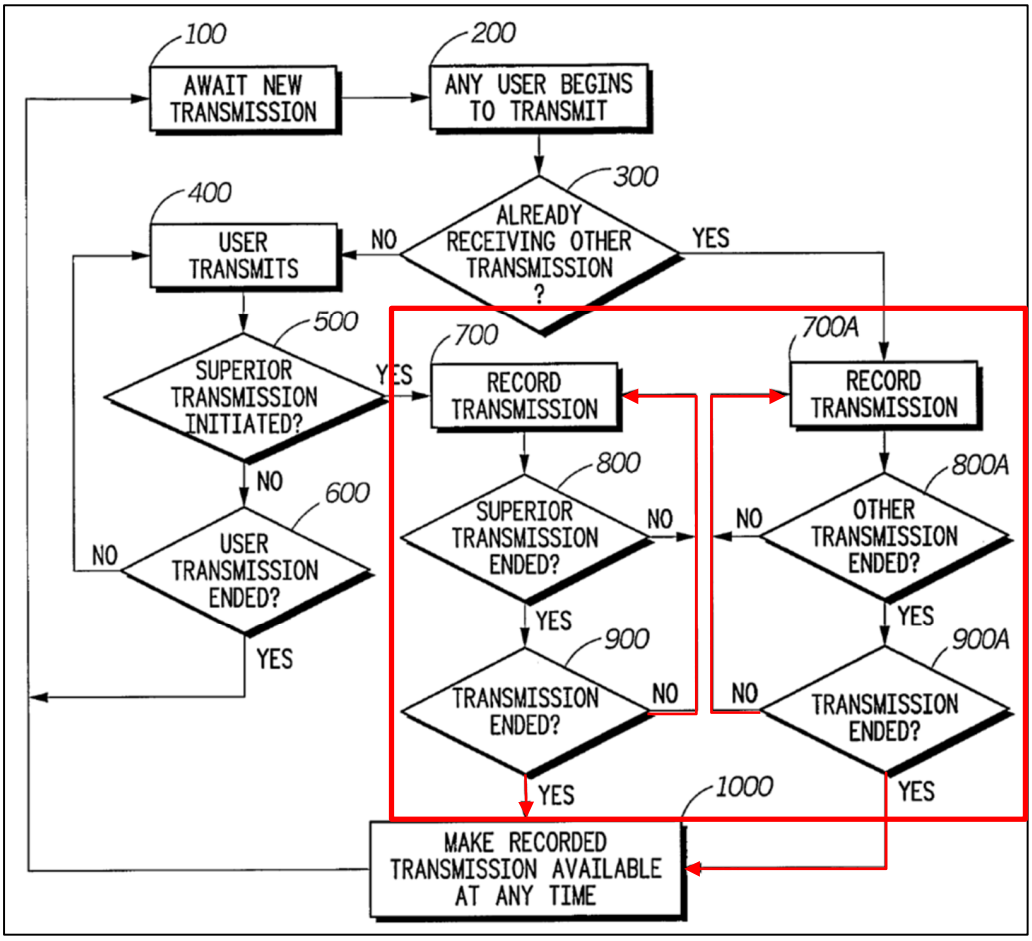

Ex[1004], Fig. 1.

197. Thus, for these and all of the same reasons described for claim 1, incorporated here, Ohel also renders claim 11 obvious. *Supra* §IX.B.1.

12. Claim 12: The method of claim 11 further comprising informing a user the time of receipt of a message while plying the message.

198. Claim 12 is nearly identical to claim 7. The only difference is that claim 12 depends on claim 11. Ex[1001], cls. 7, 12. Thus, for all of the same

reasons described for claims 7 and 11, incorporated here, Ohel also renders claim 12 obvious. *Supra* §§IX.B.7, IX.B.11.

13. Claim 13: A communication system for managing communication, the communication system receiving messages from a plurality of channels, the communication system comprising: means for receiving a plurality of messages on the plurality of channels, the plurality of messages received including a first message received from a first dedicated channel dedicated to receiving messages from a first entity and a second message received from a second dedicated channel dedicated to receiving messages from a second entity; means for playing a received messages having the highest priority, the plurality of received messages being prioritized based on at least one predefined parameter; a central conferencing system comprising: means for prioritizing the received plurality of messages including the first message from the first dedicated channel and the second message from the second dedicated channel based on the predefined parameter; means for determining which messages out of the received messages should be stored and subsequently played based on messages overlap-ping in time and one or more priorities assigned to the first and the second message; means for sending the messages for playing based on the associate priority; and means for storing the messages other than the one sent for playing in a queue based upon the associated priority.

199. Claim 13 is nearly identical to claim 1. The only differences are that claim 13 recites "*A communication system for managing communication, the communication system receiving messages from a plurality of channels, the communication system comprising*;" "*a central conferencing system comprising*;" and "*storing the messages other than the one sent for playing in a queue*."

Ex[1001], cls. 1, 13; *Bancorp*, 687 F.3d at 1277 (asserted system and medium claims treated as no different from the asserted method claims). Additionally, as discussed above, this claim is governed by 35 U.S.C. § 112, ¶6 and the functions and corresponding structure discussion is incorporated herein. *Supra* §VI.F.1.

200. Ohel discloses the function of limitation 13[a] for the reasons discussed above for element 1[a]-1[b]. *Supra* §§IX.B.1.b-IX.B.1.c. Ohel also discloses the corresponding structure transceiver units 2 to 8 each of which "operates on a given channel." Ex[1004], [0060]. "For example, the first simplex unit 2 can be set to a dispatch channel," while "the second simplex unit 3 can be set to a particular channel of another specific user for direct, two-way communication" (*plurality of channels dedicated to respective entities*). *Id*., [0060].

201. Ohel discloses the function of limitation 13[b] for the reasons discussed above for elements 1[e], and 1[g]. *Supra* §§IX.B.1.f, IX.B.1.h. Ohel also discloses the corresponding structure "a speaker or multiple speaker system 11," and the corresponding function "to play back recorded communications data." *Id.*, [0035], [0065].

202. Ohel discloses the function of limitations 13[d] and 13[e] for the reasons discussed above for element 1[c]-1[d]. *Supra* §§IX.B.1.d-IX.B.1.e. Ohel also discloses the corresponding structure of a "processor" with the corresponding function "to carry out the selective recording by determining, upon initiation of a

user's wireless transmission…to record the user's transmission for playback by at least one of the user and another user and, if not, to begin transmitting the user's transmission through the at least one transceiver." *Id.*, [0025]. The processor makes this determination if "the user's communications unit detects a superior user's transmission during the transmission of the user's message." *Id.*, [0048].

203. Ohel discloses the function of limitation 13[f] for the reasons discussed above for element 1[e]. *Supra* §IX.B.1.f. Ohel also discloses the corresponding "processor" structure "can be programmed to play back recorded transmission data stored in the memory." *Id.*, [0030].

204. Ohel discloses the function of limitation 13[g] for the reasons discussed above for element 1[f]. *Supra* §IX.B.1.g. Ohel also discloses the corresponding structure "memory 10." *Id.*, [0064]. This structure may be "an external writing media, which can include, for example, a hardware memory device or an external storage media" and has the corresponding function of "digitally storing the recorded transmission…in any format, including, but not limited to, mp3, wav, wma, real audio, quick time, avi, mpeg, bmp, jpeg, gif, divX, and raw digital data, for example." *Id.*, [0015].

205. Additionally, the multiple channel data recorder, disclosed by Ohel, "provides the user with the ability to record any number of simultaneous transmissions to the user without loss of information from any of the potential

sources." Ex[1004], [0072]. Ohel accomplishes this via "a dynamic memory device permitting substantially simultaneous recording and playback." *Id.*, [0049]. Then, "[w]hen a transmission is recorded, the transmission can be made available to users for playback (*see* step 1000) any time after recording begins." *Id.*, [0052]. A POSITA would have understood that the dynamic memory device is where all of the number of simultaneous transmissions would be stored. A POSITA would further have understood that a queue is a well-known, practical way to store multiple messages in a single memory device.

206. Further, one of the intended uses of Ohel is in a system with a "multi-party channel." *Id.*, [0005]. For example, "such communication exists with public safety communications such as police and fire/rescue" using a shared channel to communicate with dispatchers and other officers. *Id*. Thus, in an overall 'communication system' composed of individual units with this shared channel as one of the transceivers 2-8, a POSITA would have understood such a communication system to be analogous to "*a central conferencing system*."

207. Therefore, for these and all of the same reasons described for claim 1, incorporated here, Ohel also renders claim 13 obvious. *Supra* §IX.B.1.

14. Claim 14: A communication system for managing communication, the communication system receiving messages from a plurality of channels, the communication system comprising: a receiver module configured to receive a plurality of messages on the plurality of channels, the plurality of messages received including a first message received from a first dedicated channel dedicated to receiving messages from a first entity and a second message received from a second dedicated channel dedicated to receiving messages from a second entity; a player module for playing a received message having the highest priority, the plurality of received messages being prioritized based on at least one predefined parameter; a central conferencing system comprising: a prioritizing module configured to prioritize of messages including the first message received on the first dedicated channel and the second message received on the second dedicated channel based on the pre-defined parameter; a determiner configured to determine which messages out of the received messages should be stored and subsequently played based on the second message overlapping with the first message in time and one or more priorities assigned to the first and the second message; a sender module to send a message for playing based on the associated priority; and a storage medium configured to store the messages in a queue based upon the associated priority and the determination.

208. Claim 14 is nearly identical to claim 13 and, as discussed above, this claim is governed by 35 U.S.C. § 112, ¶6; §VI.F.1; *Bancorp*, 687 F.3d at 1277 (asserted system and medium claims treated as no different from the asserted method claims). The only difference is that claim 14 uses the nonce term "*module*" in place of "*means for*" used in claim 13. Therefore, as discussed for claims 1 and 13, Ohel discloses the claimed modules and functions. *Supra* §§IX.B.1, IX.B.13. Thus,

for all of the same reasons described for claim 1 and claim 13, incorporated here, Ohel also discloses or at least renders obvious claim 14. *Supra* §§IX.B.1, IX.B.13.

15. Claims 15-16

15[a]	The communication system of claim 14, wherein the prioritizing module comprises:
15[b]	a priority calculator for calculating the priority of the received messages; and
15[c]	a comparison module for comparing the priorities of the plurality of received messages.
16	The communication system of claim 14, wherein the central conferencing system further comprises an alert module for informing an operator the time of receipt of a message while playing the message.

209. Claims 15-16 are nearly identical to claims 2, and 7. The only difference is that claims 15-16 depend on claim 14 and include additional module terms for which the functions and corresponding structure previous discussion is incorporated herein. *Supra* §VI.F.1; Ex[1001], cls. 2, 7, 15-16.

210. Ohel discloses the function of limitation 15[b] for the reasons discussed above for element 1[c]-1[d], and 13. *Supra* §§IX.B.1.d-IX.B.1.e, IX.B.13. Ohel also discloses the corresponding structure of a "processor" with the corresponding function of "determining…to record the user's transmission" based on if "the user's communications unit detects [*calculates*] a superior user's transmission during the transmission of the user's message." *Id.*, [0025], [0048].

211. Ohel discloses the function of limitation 15[c] for the reasons discussed above for element 1[c], and 13. *Supra* §§IX.B.1.d, IX.B.13. Ohel also discloses the corresponding structure of a "processor" with the corresponding function of "determining…to record the user's transmission for playback by at least one of the user and another user" by comparing the transmissions to detect if one of the transmissions is "a superior user's transmission." *Id.*, [0025], [0048].

212. Ohel discloses the function of limitation 16 for the reasons discussed above for element 7. *Supra* §IX.B.7. Ohel also discloses the corresponding structure "display 13" and the corresponding function of displaying "a specified time stamp" when "audio information is being played." *Id.*, [0066]. As discussed previously, a POSITA would understand this to mean displaying the time of receipt of a message. *Supra* §IX.B.7.

213. Thus, for all of the same reasons described for claims 2, 7, and 14, incorporated here, Ohel also discloses or at least renders obvious claims 15-16. *Supra* §§IX.B.2, IX.B.7, IX.B.14.

16. Claim 17: A central conferencing system for managing a plurality of messages received by a communication system, the central conferencing system comprising: a receiver module configured to receive a plurality of messages on the plurality of channels, the plurality of messages received including a first message received from a first dedicated channel dedicated to receiving messages from a first entity and a second message received from a second dedicated channel dedicated to receiving message from a second entity; a prioritizing module for prioritizing the received messages based on at least one predefined parameter, the prioritizing module comprises: a priority calculator for calculating the priority of the received messages including the first message received on the first dedicated channel and the second message received on the second dedicated channel; and a comparison module for comparing the priorities of the plurality of received messages; a sender module for sending the messages with the highest priority to the player module for playing; a determiner configured to determine which messages out of the received messages should be stored and subsequently played based on the second message overlapping with the first message in time and one or more priorities assigned to the first and the second message; a storage module for storing the messages from amongst the plurality of messages that are not being played; and an alert module for informing a user the time of receipt of a message while playing the message.

214. Claim 17 is nearly identical to the combination of claims 14-16. Ex[1001], cls. 14-17. The only differences are that the preamble of claim 17 is "*A central conferencing system for managing a plurality of messages received by a communication system, the central conferencing system comprising:*" instead of "*A communication system for managing communication, the communication system receiving messages from a plurality of channels, the communication system*

comprising:," and "*a storage* ***module*** *for storing the messages from amongst the plurality of messages that are not being played;*" instead of "*a storage medium configured to store the messages in a queue based upon the associated priority and the determination.*" Ex[1001], cls. 14-17; *Bancorp*, 687 F.3d at 1277 (asserted system and medium claims treated as no different from the asserted method claims).

215. Therefore, for these and all of the same reasons described for claims 14-16, incorporated here, Ohel also discloses or at least renders obvious claim 17. *Supra* §§IX.B.14-IX.B.15.

17. Claim 18: An apparatus for managing communication in a communication system, the communication system receiving messages on a plurality of channels, the apparatus comprising: a processing system including a processor coupled to a display and us-er input device; and a machine-readable medium including instructions executable by the processor comprising: one or more instructions for receiving a plurality of messages on the plurality of channels, the plurality of messages received including a first message received from a first dedicated channel to receiving messages from a first entity and a second message received from a second dedicated channel dedicated to receiving messages from a second entity; one or more instructions for playing the message having the highest priority, the priority of the received messages including the first message and the second message being determined based on at least one predefined parameter; one or more instructions for determining which messages out of the received m messages should be stored and subsequently played based on messages overlapping in time and one or more priorities assigned to the first and the second message; one or more instructions for playing the stored messages subsequent to completing playing of the message having higher priority.

216. Claim 18 is nearly identical to claim 1. The only differences are that claim 18 recites "*[a]n apparatus for managing communication in a communication system, the communication system receiving messages on a plurality of channels, the apparatus comprising: a processing system including a processor coupled to a display and user input device; and a machine-readable medium including instructions executable by the processor*." Ex[1001], cls. 1, 18; *Bancorp*, 687 F.3d at 1277 (asserted system and medium claims treated as no different from the asserted method claims).

217. The multiple channel data recorder, disclosed by Ohel, discloses the claimed apparatus because it "provides the user with the ability to record any number of simultaneous transmissions to the user without loss of information from any of the potential sources." Ex[1004], [0072]. "An example device (*apparatus for managing communication in a communication system*) that could apply this configuration is described in association with FIG. 2." *Id.*, [0059]. "Each of the seven example transceiver units 2 to 8 (*plurality of channels*) in the example embodiment is connected to a central processing unit 9 (*processor*)." *Id.*, [0064]. Connected to the processing unit 9, among other things, is "a microphone or multiple microphone system 12, which can include an external microphone connection (*user input device*)," and "a *display* 13" which is "a touch-screen having various display sections (*user input device*)." *Id.*, [0065]. Thus, in view of the above, and for all of the same reasons described for claim 1, incorporated here, Ohel also discloses or at least renders obvious claim 18. *Supra* §IX.B.1.

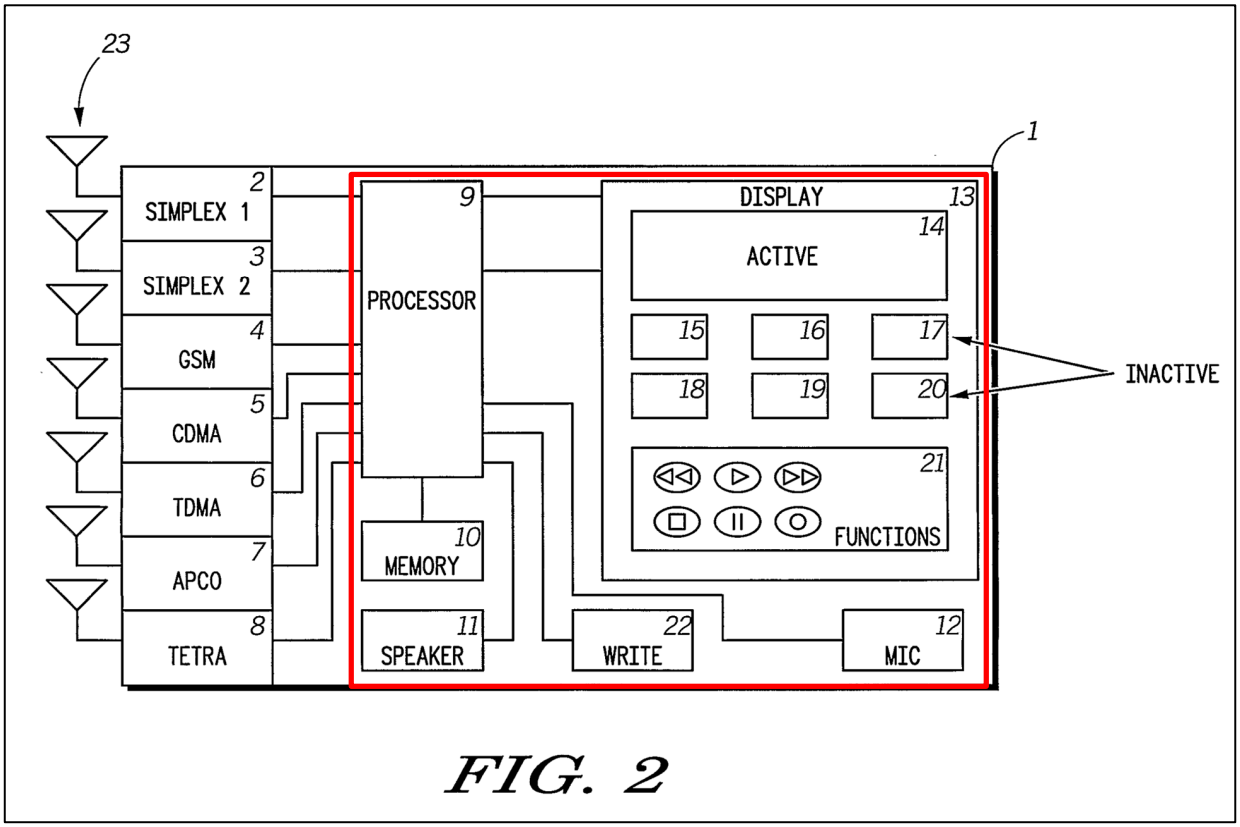

FIG. 2

Ex[1004], Fig. 2.

18. Claim 19: A machine-readable medium including instructions executable by the processor comprising: one or more instructions for receiving a plurality of messages on the plurality of channels, the plurality of messages received including a first message received from a first dedicated channel dedicated to receiving messages from a first entity and a second message received from a second dedicated channel dedicated to receiving messages from a second entity; one or more instructions for playing the message having the highest priority, the priority of the received messages being including the first message and the second message being determined based on at least one pre-defined parameter; one or more instructions for determining which messages out of the received messages should be stored and subsequently played based on message overlapping in time and one or more priorities assigned to the first and the second message; one or more instructions for storing at least one message having a low-er priority; and one or more instructions for playing the stored messages subsequent to completing playing of the message having higher priority.

218. Claim 19 is nearly identical to claim 1. The primary difference is that claim 19 recites "*A machine-readable medium including instructions executable by the processor.*" Ex[1001], cls. 1, 19; *Bancorp*, 687 F.3d at 1277 (asserted system and medium claims treated as no different from the asserted method claims). The multiple channel data recorder, disclosed by Ohel, "provides the user with the ability to record any number of simultaneous transmissions to the user without loss of information from any of the potential sources." Ex[1004], [0072]. "An example device that could apply this configuration is described in association with FIG. 2."

Id., [0059]. In the example, the "embodiment is connected to a central processing unit 9" and "[t]he processing unit 9 is connected to a memory 10." *Id.*, [0064].

219. It would be obvious to a POSITA in view of Ohel's disclosure that memory 10 is a *machine-readable medium including instructions executable by the processor*.

220. Thus, in view of the above, and for all of the same reasons described for claim 1, incorporated here, Ohel also discloses or at least renders obvious claim 19. *Supra* §IX.B.1.

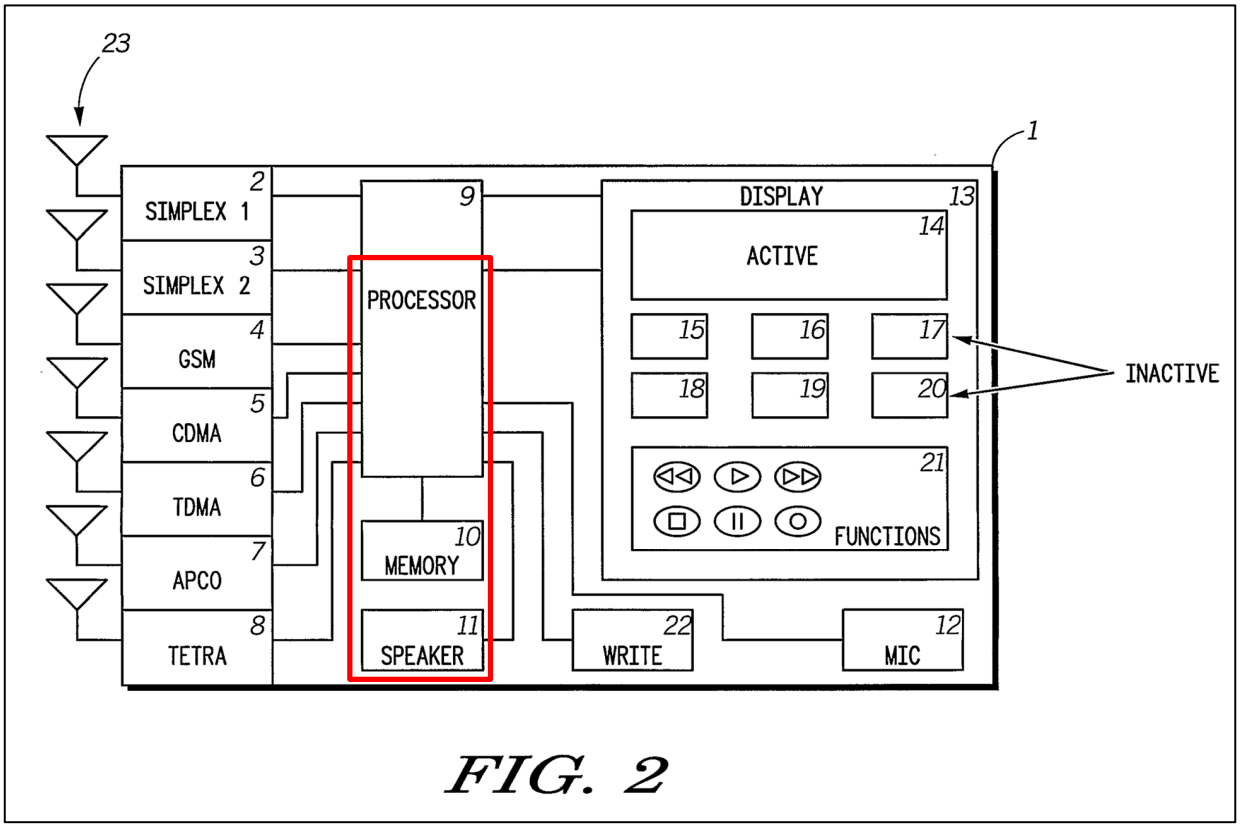

FIG. 2

Ex[1004], Fig. 2.

19. Claim 20: The method of claim 1, wherein playing the message comprises playing the message having a higher priority between the first and second message without storing the message having the higher priority if no other message is being played.

221. Ohel discloses "*playing the message having a higher priority between the first and second message without storing the message having the higher priority if no other message is being played*."

222. As discussed previously, and shown in Figure 1, when an interrupting higher priority communication is received the lower priority communication is recorded and played later, or when an interrupting lower priority communication is received, it is recorded for playback after the first message is finished. Ex[1004], [0050]; *see also id.*, Abstract, [0035]-[0036], [0048], [0055], and [0070]-[0072].

223. As depicted in Figure 1, steps 100-600, if no higher priority transmission interrupts the first message, the transmission is played but not recorded. In the approach described by Ohel and discussed above, only messages interrupted by higher priority transmissions, or messages that begin second are recorded. Further supporting this, Ohel discloses that only "[i]n an alternative embodiment, the method would always be recording the user's message." *Id.*, [0051].

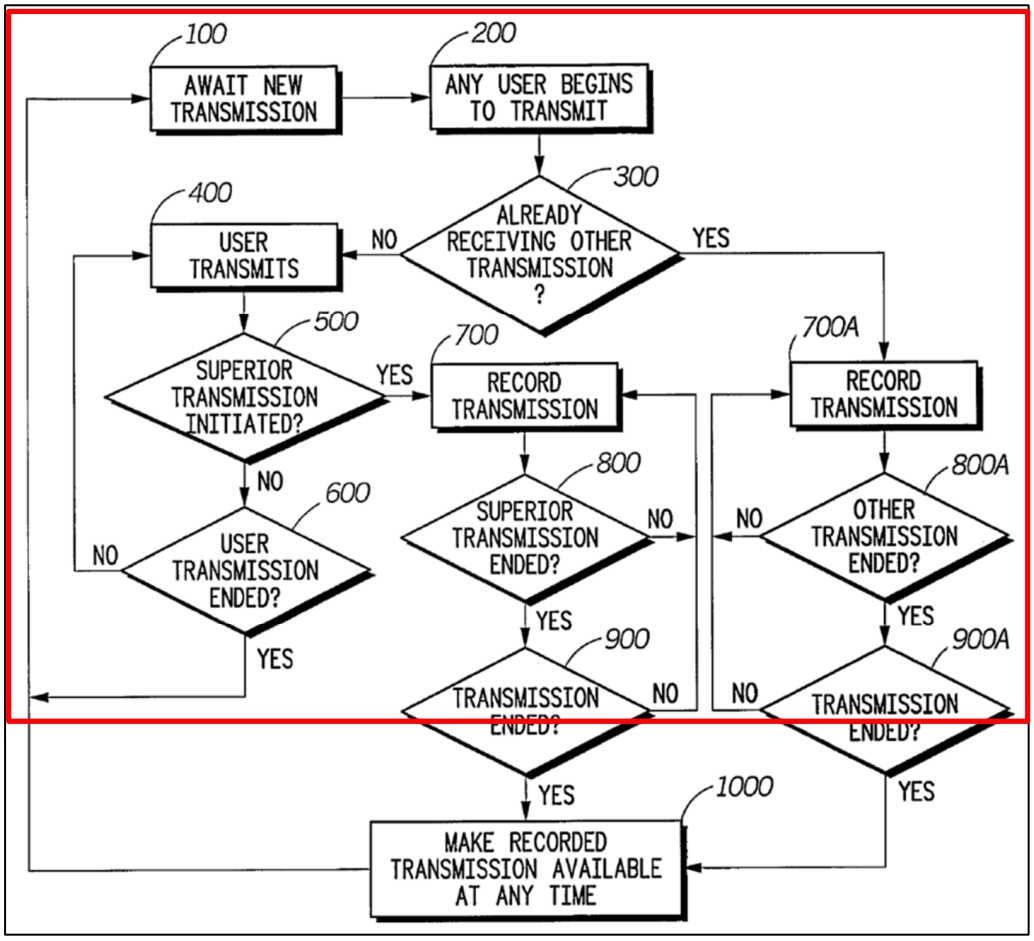

Ex[1004], Fig. 1.

224. Thus, Ohel discloses or at least renders obvious *playing the message having a higher priority between the first and second message without storing the message having the higher priority if no other message is being played*.

20. Claim 21: The method of claim 1, wherein determining the priority comprises determining the priority based on the dedicated channel the first message and/or the second message is received on.

225. Ohel discloses "*determining the priority comprises determining the priority based on the dedicated channel the first message and/or the second message is received on*."

226. As previously discussed, Ohel can determine priority based on specific transceiver, such as "the user's APCO transceiver," that the message is received on. Ex[1004], [0070]. In this example, incoming communication on the APCO transceiver (*dedicated channel the second message is received on*) was given *priority* over ongoing communications on the CDMA transceiver (*dedicated channel the first message is received on*). *Id*.

227. Thus, Ohel discloses or at least renders obvious *determining the priority comprises determining the priority based on the dedicated channel the first message and/or the second message is received on*.

C. Ground 2: Claims 1-7 and 11-21 are obvious over Nigawara.

1. Nigawara is Analogous Art to the '802 Patent

228. Nigawara is analogous art to the '802 Patent. A prior art reference is analogous to a patent if it (1) "is from the same field of endeavor, regardless of the problem addressed," or (2) "the reference … is reasonably pertinent to the particular problem with which the inventor is involved." *Donner Tech., LLC v. Pro Stage*

Gear, LLC, 979 F.3d 1353, 1359 (Fed. Cir. 2020) (quoting *In re Bigio*, 381 F.3d 1320, 1325 (Fed. Cir. 2004)). Additionally, the Federal Circuit has recently reaffirmed that relevant art should not be "limited to a narrow subset of what the claims of a patent cover—a conclusion that would risk curtailing prior-art analysis of a claim to less than its exclusive-rights-protecting scope," or because "the specification notes a 'need'…that may have supplied the inventor's starting point." *Axonics, Inc. v. Medtronic, Inc.*, No. 2022-1451, 2023 WL 4410686, at *6 (Fed. Cir. July 10, 2023).

229. Nigawara is analogous art at least because it is "reasonably pertinent to the particular problem with which the inventor is involved." *Donner Tech.,* 979 F.3d at 1359. "A reference is reasonably pertinent if … it is one which, because of the matter with which it deals, logically would have commended itself to an inventor's attention in considering his problem." *Scientific Plastic Products, Inc. v. Biotage AB,* 766 F.3d 1355, 1359 (Fed. Cir. 2014). Nigawara is reasonably pertinent to the problem the inventor was trying to solve in the '802 Patent, because it relates to an "automatic voice message announcing method and system…without the possibility of intermixing messages even when a plurality of voice message announcing devices are provided." Ex[1007], 1:40-48. Nigawara is thus pertinent to the problem the inventor of the '802 Patent was trying to solve, because the '802 Patent is similarly directed towards addressing the "confusion for an

operator who needs to reply/act on each incoming radio message" created by "[t]he receipt of multiple radio messages at one time," as shown in Figure 4 below. Ex[1001], 1:25-27.

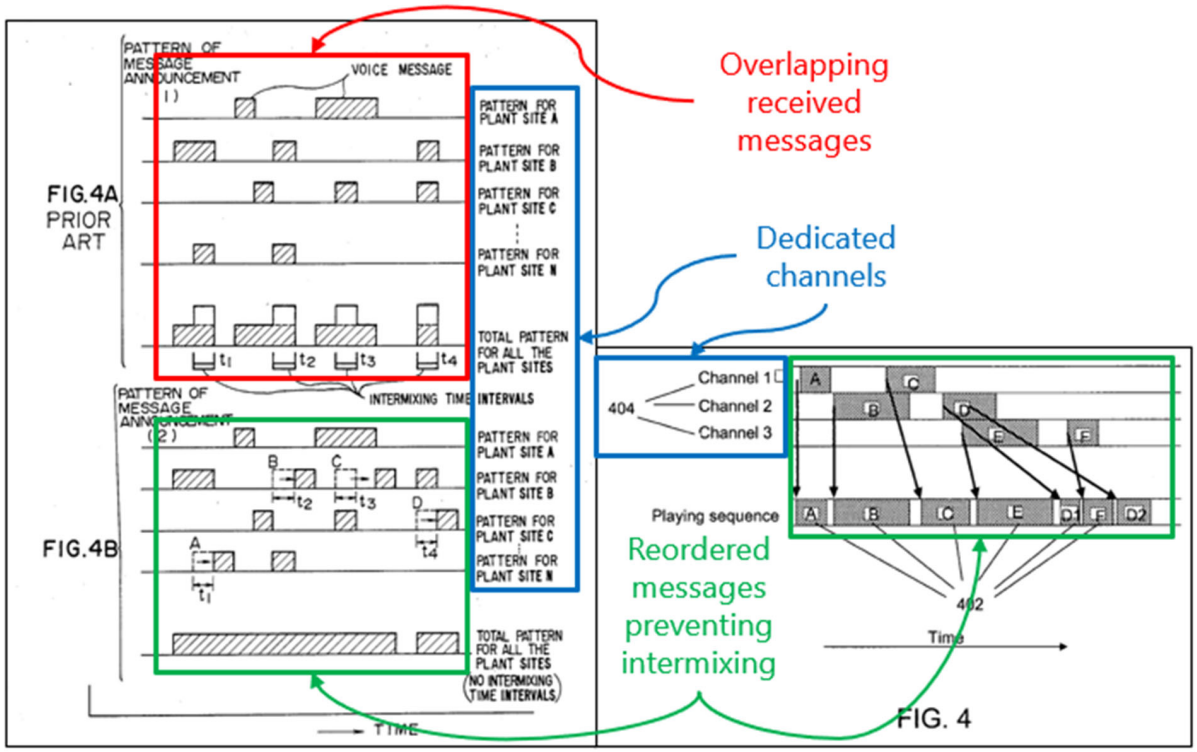

Ex[1007], Figs. 4A-4B; Ex[1001], Fig. 4 (annotated).

230. Thus, both Nigawara and the '802 Patent were concerned with solving the problem of intermixed or overlapping audio messages creating confusion for users. Ex[1001], 1:25-27; Ex[1007], 1:40-48; *Id.*; *see also Unwired Planet*, 841 F.3d at 1001 ("If a reference disclosure and the claimed invention have a same purpose, the reference relates to the same problem, which supports an obviousness rejection.").

231. Thus, Nigawara would have been looked to by a POSITA considering the problem of prioritizing and playing overlapping messages so as to prevent confusion caused by overlapping or intermixing the messages. *Scientific Plastic Products*, 766 F.3d at 1359.

232. Nigawara also falls within the same field of endeavor as the '802 Patent. The '802 Patent is directed towards "methods and systems for managing communication in an emergency communication system." Ex[1001], 1:10-11. Similarly, Nigawara relates to "a method and system for announcing, by voice messages" alerts received from monitored equipment. Ex[1007], 1:6-7. Additionally, Nigawara discloses that when "an emergency voice message signal having a higher priority is received by the message output unit 102, the announcement of the former signal may be interrupted, and the latter signal or emergency signal may be announced. Such interrupt processing is also included in the scope of the present invention." Ex[1007], 4:32-39.

233. Similarly, the '802 Patent discloses that "the message audio portions can be prioritized and played back on the basis of the priority," (Ex[1001], 1:50-52) determined based on "the type of radio messages, the size of the radio messages, the bandwidth requirement, the channel from which radio messages are received, or any possible combination thereof." *Id*., 4:59-62. Thus, Nigawara is analogous art to the '802 Patent.

2. Claim 1

234. Nigawara discloses or at least renders obvious *a method of managing communication in a communication system, the communication system receiving messages from a plurality of channels, the method comprising: receiving a first message on a first dedicated channel from amongst the plurality of channels at the communication system, the plurality of channels being dedicated to different entities, the first dedicated channel being dedicated to receiving messages from a first entity; receiving a second message on a second dedicated channel being dedicated to receiving messages from a second entity from amongst the plurality of channels at the communication system, the second message overlapping with the first message in time; determining one or more priorities for the first message received on the first dedicated channel from the first entity and the second message received on the second dedicated channel from the second entity based on at least one pre-defined parameter; determining which message out of the first message and the second message should be stored and subsequently played based on the second message overlapping with the first message in time and one or more priorities assigned to the first and the second message; playing the message having a higher priority between the first and the second message; storing at least one message having a lower priority between the first and the second message based on the determination; and*

playing the stored message subsequent to completing playing of the message having higher priority.

a. 1[Pre]: A method of managing communication in a communication system, the communication system receiving messages from a plurality of channels, the method comprising:

235. If the preamble is limiting, Nigawara discloses "[a] voice message announcing *method* for a plurality of plant sites," where information signals are received "from a plurality of independent voice message announcing devices" dedicated to individual plant sites, which are then determines "the priority order of announcement" in order to remove "the possibility of intermixing messages even when a plurality of voice message[s]" are provided at the same time. Ex[1007], 1:40-62, 7:35-47.

236. Thus, Nigawara discloses or at least renders obvious *a method of managing communication in a communication system, the communication system receiving messages from a plurality of channels*.

b. 1[a]: receiving a first message on a first dedicated channel from amongst the plurality of channels at the communication system, the plurality of channels being dedicated to different entities, the first dedicated channel being dedicated to receiving messages from a first entity;

237. Nigawara discloses, or at least renders obvious, "*receiving a first message* [e.g., information signals 5] *on a first dedicated channel* [e.g., units 1 and

2 provided for plant site A] *from amongst the plurality of channels at the communication system*[e.g., all units 1 and 2]*, the plurality of channels being dedicated to different entities* [e.g., units 1 and 2 provided for plant sites B, C, … , N]*, the first dedicated channel being dedicated to receiving messages from a first entity* [e.g., plant site A]."

238. Nigawara, as shown in Figure 1 below, discloses a monitoring system for "plant sites A, B, C,..., N," which receives "[i]nformation signals 5 indicative of operating conditions of [each] plant site" (shown in blue below) and announces these conditions by voice message. Ex[1007], 2:27-32. These information signals are sent, in parallel, through "the plural independent voice message announcing devices," [*plurality of channels*] formed by units 1 and 2 (shown in red below). *Id.*, 1:56-62. "The units 1 and 2" are "provided for each of the [] plant sites" (*dedicated to different entities*). *Id.*, 3:28-29.

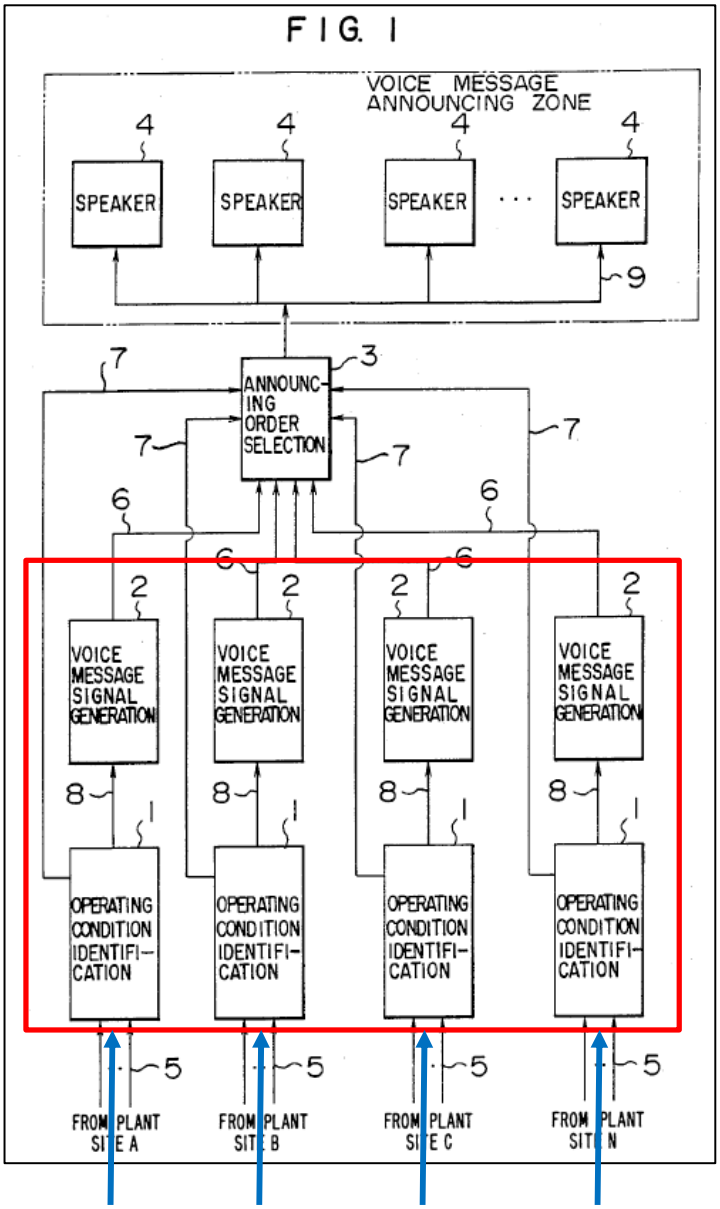

Ex[1007], Fig. 1.

239. Thus, a POSITA would have understood that these information signals 5 are *messages* received on *channels* (plural independent voice message announcing devices) *dedicated* to each plant site A-N (*plurality of entities*). *See also* Ex[1007], 1:40-48, 1:56-65, 2:27-3:41, 3:53-60, 4;30-37, and 5:29-31.

240. Therefore, Nigawara discloses *receiving a first message on a first dedicated channel from amongst the plurality of channels at the communication system, the plurality of channels being dedicated to different plant sites*, *the first dedicated channel being dedicated to receiving messages from a first entity*.

c. 1[b]: receiving a second message on a second dedicated channel being dedicated to receiving messages from a second entity from amongst the plurality of channels at the communication system, the second message overlapping with the first message in time;

241. Nigawara discloses "*receiving a second message* [e.g., information signals 5] *on a second dedicated channel being dedicated to receiving messages from a second entity from amongst the plurality of channels at the communication system, the second message over lapping* [e.g., plural demands for voice message announcement] *with the first message in time* [e.g., plant site B]."

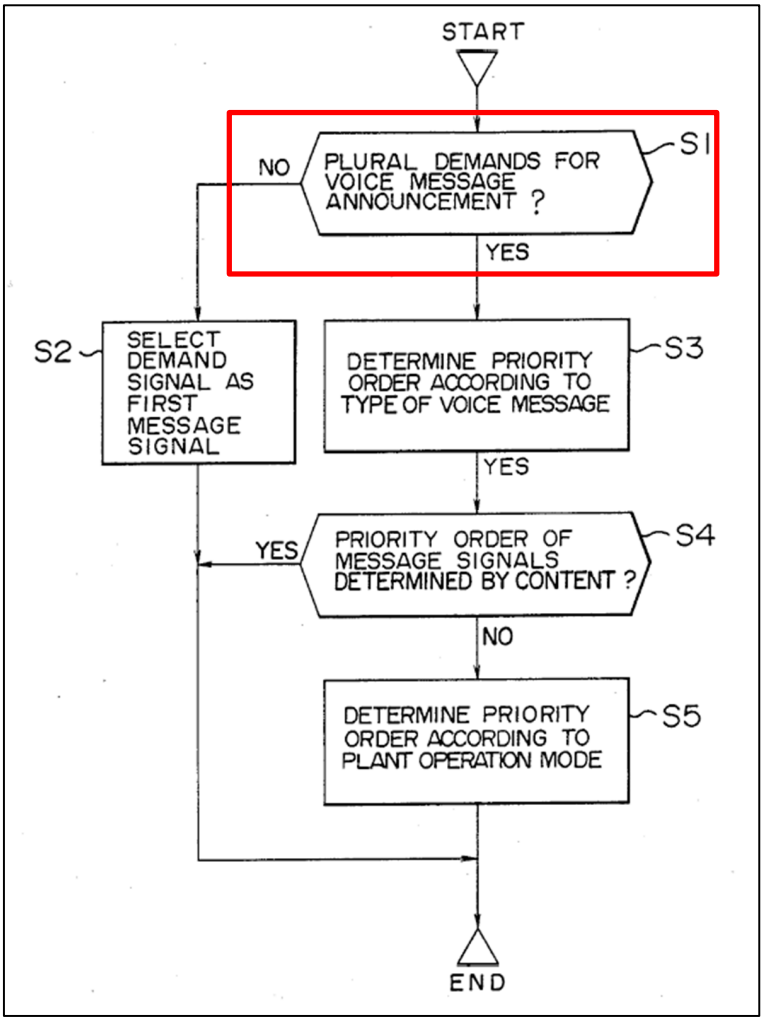
START
PLURAL DEMANDS FOR VOICE MESSAGE ANNOUNCEMENT ?
S1
NO
YES
SELECT DEMAND SIGNAL AS FIRST MESSAGE SIGNAL
S2
DETERMINE PRIORITY ORDER ACCORDING TO TYPE OF VOICE MESSAGE
S3
YES
PRIORITY ORDER OF MESSAGE SIGNALS DETERMINED BY CONTENT ?
S4
YES
NO
DETERMINE PRIORITY ORDER ACCORDING TO PLANT OPERATION MODE
S5
END

Ex[1007], Fig. 3;

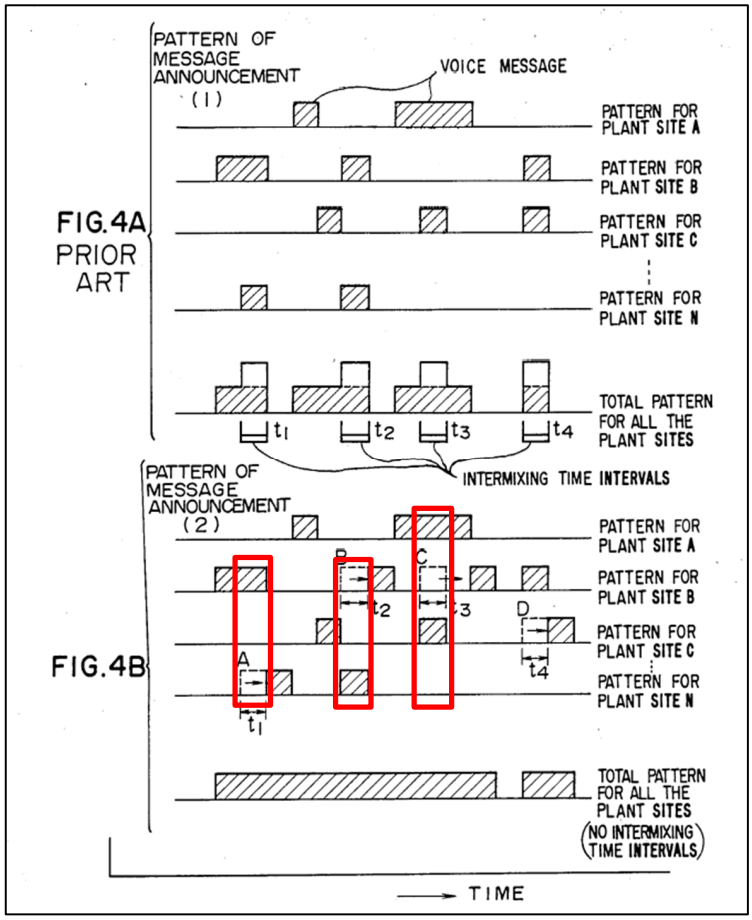

Ex[1007], FIGs.4A-4B, 7:10-29.

242. As discussed above, and shown in Figure 1 below, Nigawara discloses receiving "[i]nformation signals 5 indicative of operating conditions of [a plurality of] plant site[s]" (*dedicated channels*). Ex[1007], 2:27-32.

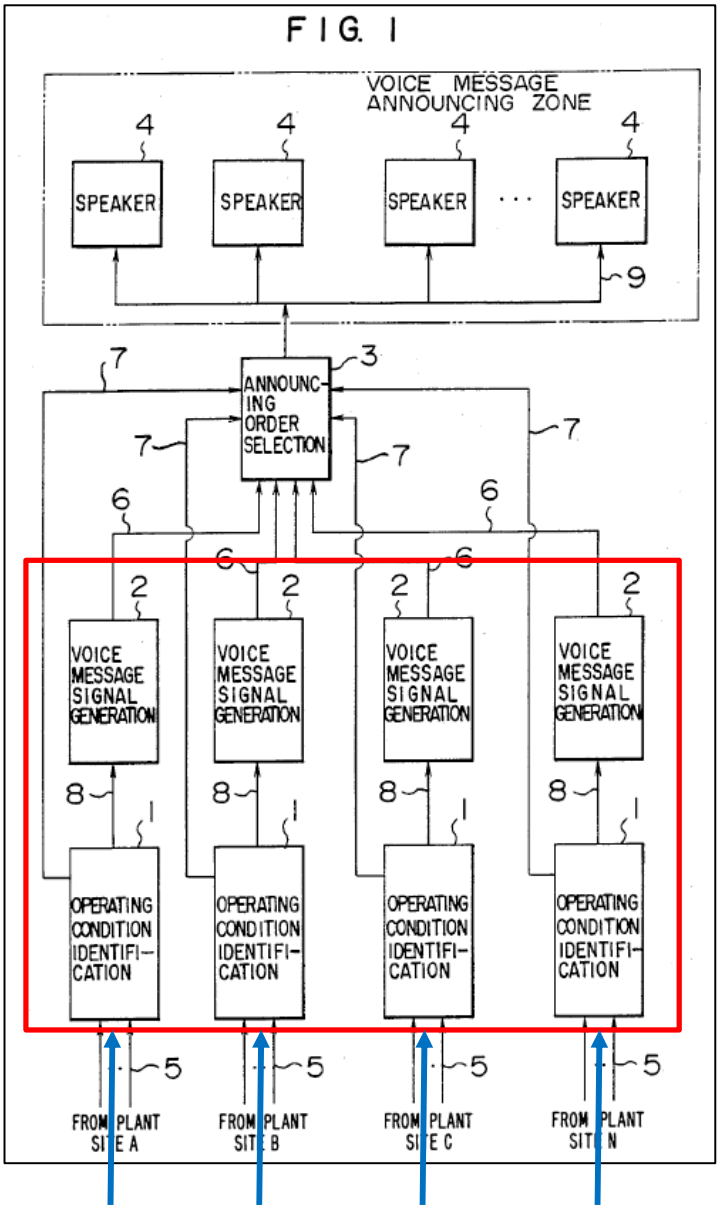

Ex[1007], Fig. 1.

243. Nigawara further discloses receiving a second message that is overlapping in time with a first message. For example, Nigawara provides solutions for situations in which "a plurality of demands for announcement of voice messages occur simultaneously." *Id.*, 3:53-55. According to Nigawara, this

occurs when either "a plurality of demands literally occur at the same time" or "two or more demands for announcement of voice messages occur while another voice message is being announced from one of the speakers 4." *Id.*, 3:56-60. Nigawara discloses a solution to both meanings of a plurality of message demands simultaneously. *See also id.,* 1:40-48, 1:56-65, 2:27-3:41, 3:53-60, 4;30-37, and 5:29-31.

244. Thus, Nigawara discloses or at least renders obvious *receiving a second message on a second dedicated channel being dedicated to receiving messages from a second entity from amongst the plurality of channels at the communication system, the second message overlapping with the first message in time*.

d. 1[c]: determining one or more priorities for the first message received on the first dedicated channel from the first entity and the second message received on the second dedicated channel from the second entity based on at least one pre-defined parameter;

245. Nigawara discloses "*determining one or more priorities* [e.g., determining priority according to type, content, or plant operation] *for the first message received on the first dedicated channel from the first entity and the second message received on the second dedicated channel from the second entity based on at least one pre-defined parameter* [e.g., type of voice message, content, or plant operation mode]."

246. Nigawara discloses that "[w]hen a plurality of demands for announcement of voice messages exist simultaneously, the message announcing order selection unit 3 determines the priority order of announcement of the voice messages" based on the type of message output signals and plant operation mode signals as shown in Tables 1 and 2, shown below (*determining one or more priorities for the first message received on the first dedicated channel from the first entity and the second message received on the second dedicated channel from the second entity based on at least one pre-defined parameter*). Ex[1007], 3:33-39.

TABLE 1

Example of determination of priority order according to contents of voice messages (type of message output signals 6)	
Priority order	Contents of Message
1st	Voice message announcing serious trouble in main machinery and equipments

TABLE 1-continued

Example of determination of priority order according to contents of voice messages (type of message output signals 6)	
Priority order	Contents of Message
2nd	Voice message announcing medium trouble in large auxiliary machinery and equipment
3rd	Voice message announcing a change in operating conditions of main machinery and equipment
4th	Voice message teaching actuation of automatically controlled machinery and equipment
5th	Voice message announcing slight trouble in valves and small auxiliary machinery and equipment
6th	Voice message announcing a change in operating conditions of auxiliary machinery and equipment
7th	Voice message announcing guidance for actuation of automatically controlled machinery and equipment

TABLE 2

Example of determination of priority order according to plant operation modes provided by plant operation mode signals 7 (secondary determination)	
Priority order	Operation mode
1st	Starting stage (after parallel-in)
2nd	Starting stage (before parallel-in)
3rd	Stopping stage (before parallel-off)
4th	Stopping stage (after parallel-off)
5th	Steady operation (changing load)
6th	Steady operation (fixed load)
7th	Not in operation

247. As shown in Figure 2 below, "when plural, for example two, voice message signals 6 are simultaneously applied, the priority order and the type of voice message signals 6 shown in Table 1" and "the plant operation mode information signals 7…rule[s] shown in Table 2" are used "to classify them into a first message

signal and a second message signal ***according to the predetermined priority order***."

Ex[1007], 6:36-42.

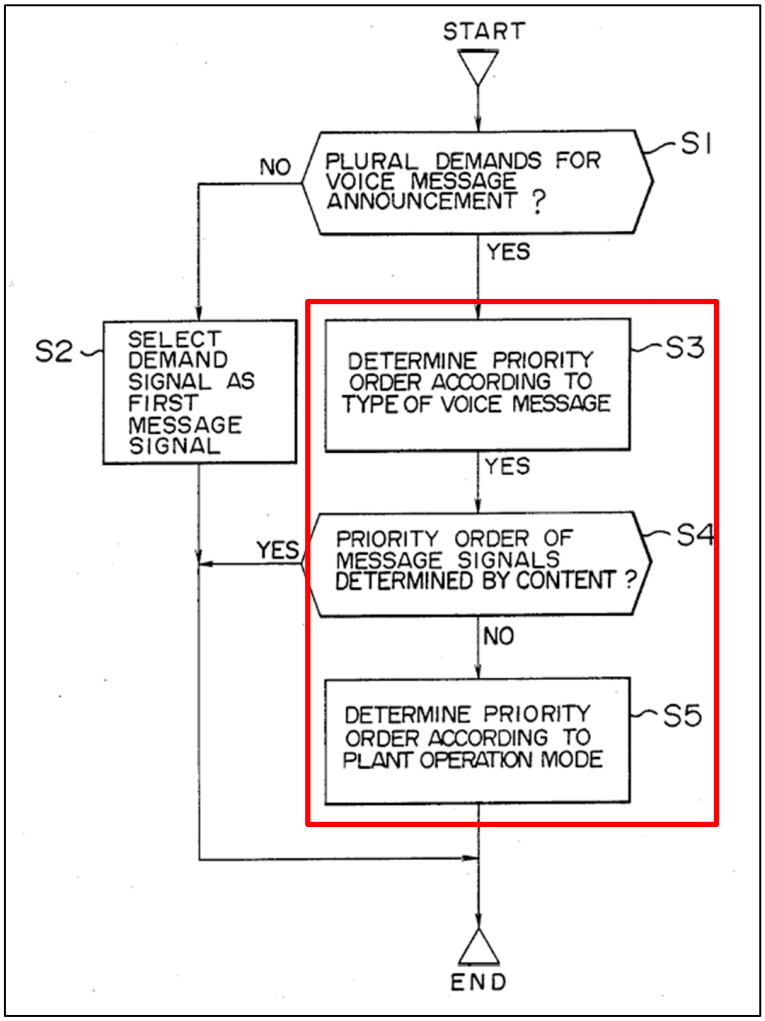

Ex[1007], Fig. 3.

248. Therefore, Nigawara discloses determining the priority of messages based on at least predefined parameters such as content, importance of information, and plant operation conditions. *See also id.*, 1:56-62, 3:33-47, 4:6-15, 4:39-58, 5:24-68, 6:35-7:2, and 7:20-28.

249. Thus, Nigawara discloses or at least renders obvious *determining one or more priorities for the first message received on the first dedicated channel from the first entity and the second message received on the second dedicated channel from the second entity based on at least one pre-defined parameter*.

e. 1[d]: determining which message out of the first message and the second message should be stored and subsequently played based on the second message overlapping with the first message in time and one or more priorities assigned to the first and the second message;

250. Nigawara discloses "*determining which message out of the first message and the second message should be stored and subsequently played* [e.g., via message announcing order determination 11] *based on the second message overlapping with the first message in time and one or more priorities assigned to the first and the second message*."

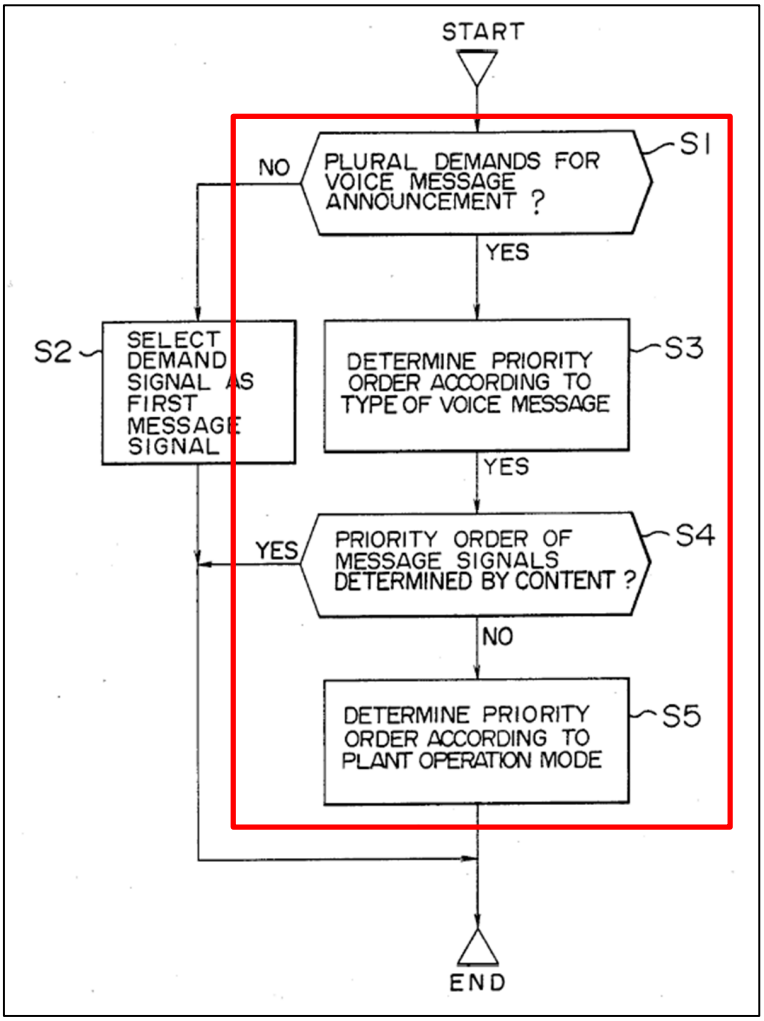

Ex[1007], Fig. 3.

251. As shown in Figure 2 below, when Nigawara's system encounters plural demands for voice message announcement, "[v]oice message output signals 6 from…the individual plants are stored in a voice message signal memory 10" and sent to the "message announcing order determination unit 11," which determines the priorities of each message. Ex[1007], 3:68-4:5. Once those priorities have been determined, "where announced messages overlap each other, those voice message

signals having priority lower than the others are announced with a suitable delay according to the priority order, so as to solve the problem of intermixture of announced messages." *Id.*, 7:23-28. A POSITA would have understood from Nigawara's disclosure that lower priority messages announced with a suitable delay (i.e., lower priority messages) would be stored in voice signal memory 10 for the duration of that delay.

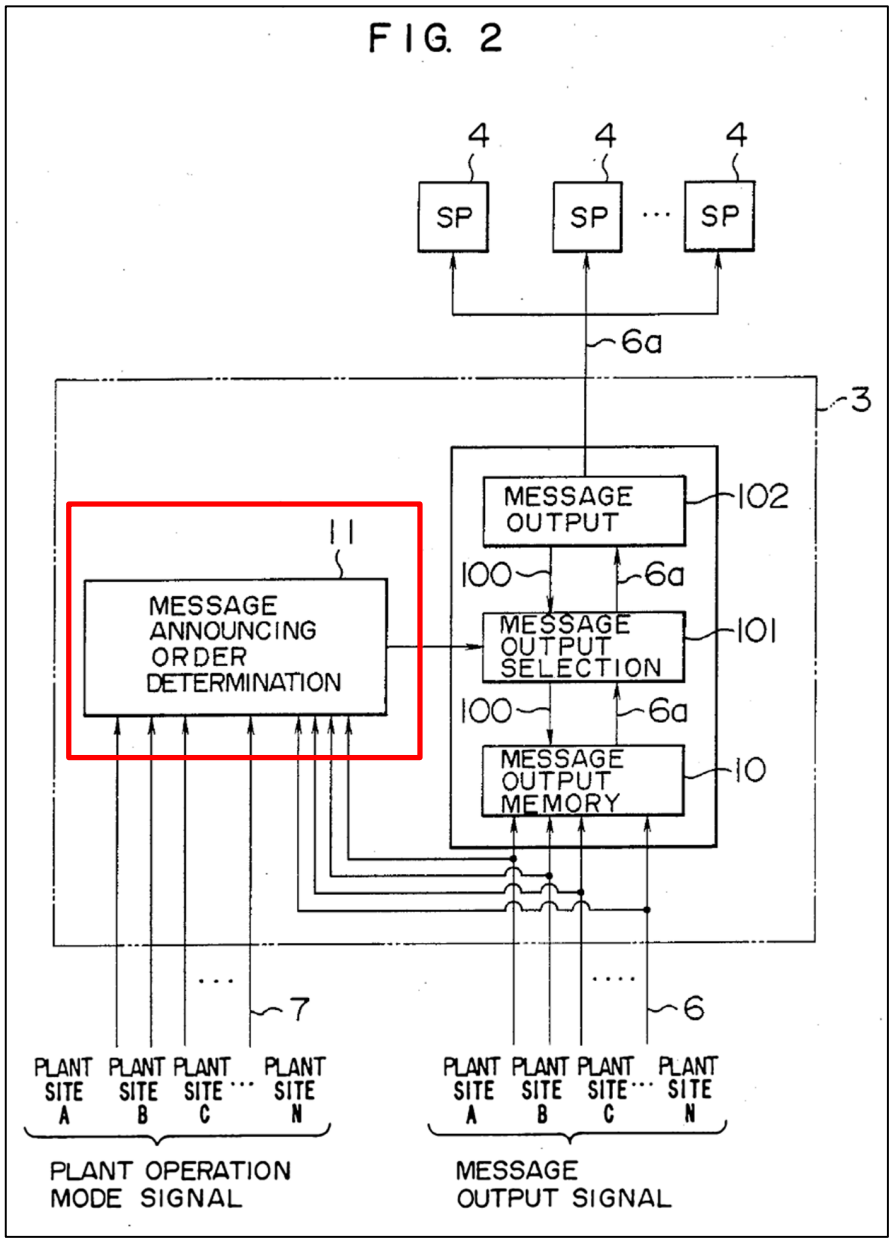

Ex[1007], Fig. 2.

252. For example, Figures 4A and 4B below "that in time intervals t_1, t_2, t_3 and t_4, where announced messages over-lap each other, those voice message signals having priority lower than the others are announced with a suitable delay according to the priority order, so as to solve the problem of intermixture of announced

messages." *Id.*, 7:22-28; *see also id.*, Abstract, 1:40-2:3, 2:59-3:2, 3:66-4:58, 6:35-7:2, 7:10-28.

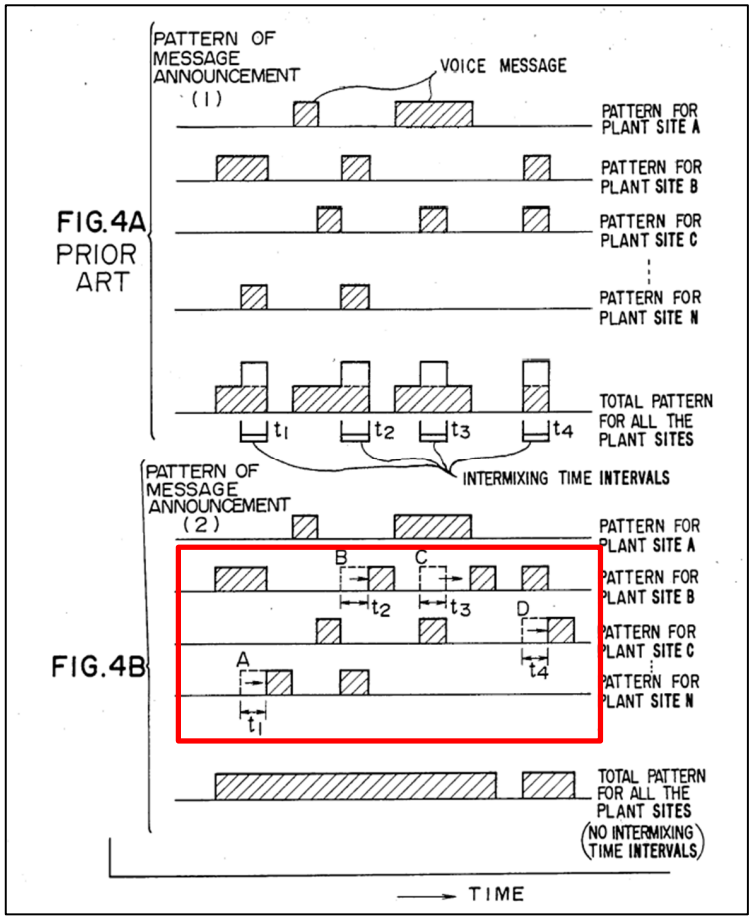

Ex[1007], Figs. 4A-4B.

253. Thus, Nigawara discloses or at least renders obvious *determining which message out of the first message and the second message should be stored and subsequently played based on the second message overlapping with the first message in time and one or more priorities assigned to the first and the second message*.

f. 1[e]: playing the message having a higher priority between the first and the second message;

254. Nigawara discloses "*playing* [via speakers 4] *the message having a higher priority between the first and the second message* [e.g., as determined by announcing order selection 3]."

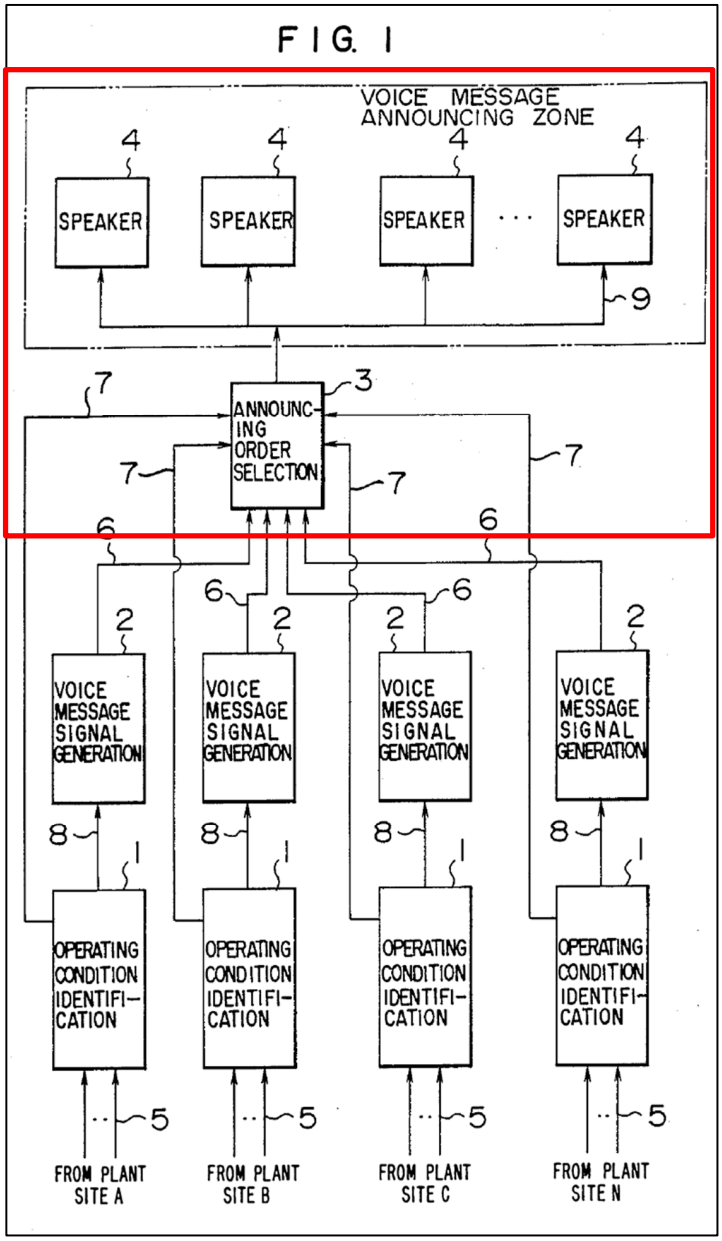

Ex[1007], Fig. 1.

255. Nigawara teaches that "[w]hen a plurality of demands for announcement of voice messages exist simultaneously, the message announcing order selection unit 3 determines the priority order of announcement of the voice messages…and the voice messages are announced from speakers 4 according to the priority 40 order." Ex[1007], 3:33-41. Speakers 4, shown in Figure 1 above, are the output of the Announcing Order Selection 3. *See also id.*, Abstract, 2:59-3:2, 3:30-65, 4:16-30, 4:39-58, 6:35-7:2, and 7:20-28.

256. Thus, Nigawara discloses *playing the message having a higher priority between the first and the second message*.

g. 1[f]: storing at least one message having a lower priority between the first and the second message based on the determination; and

257. Nigawara discloses "storing [e.g., via voice message signal memory 10] at least one message having a lower priority between the first and the second message based on the determination."

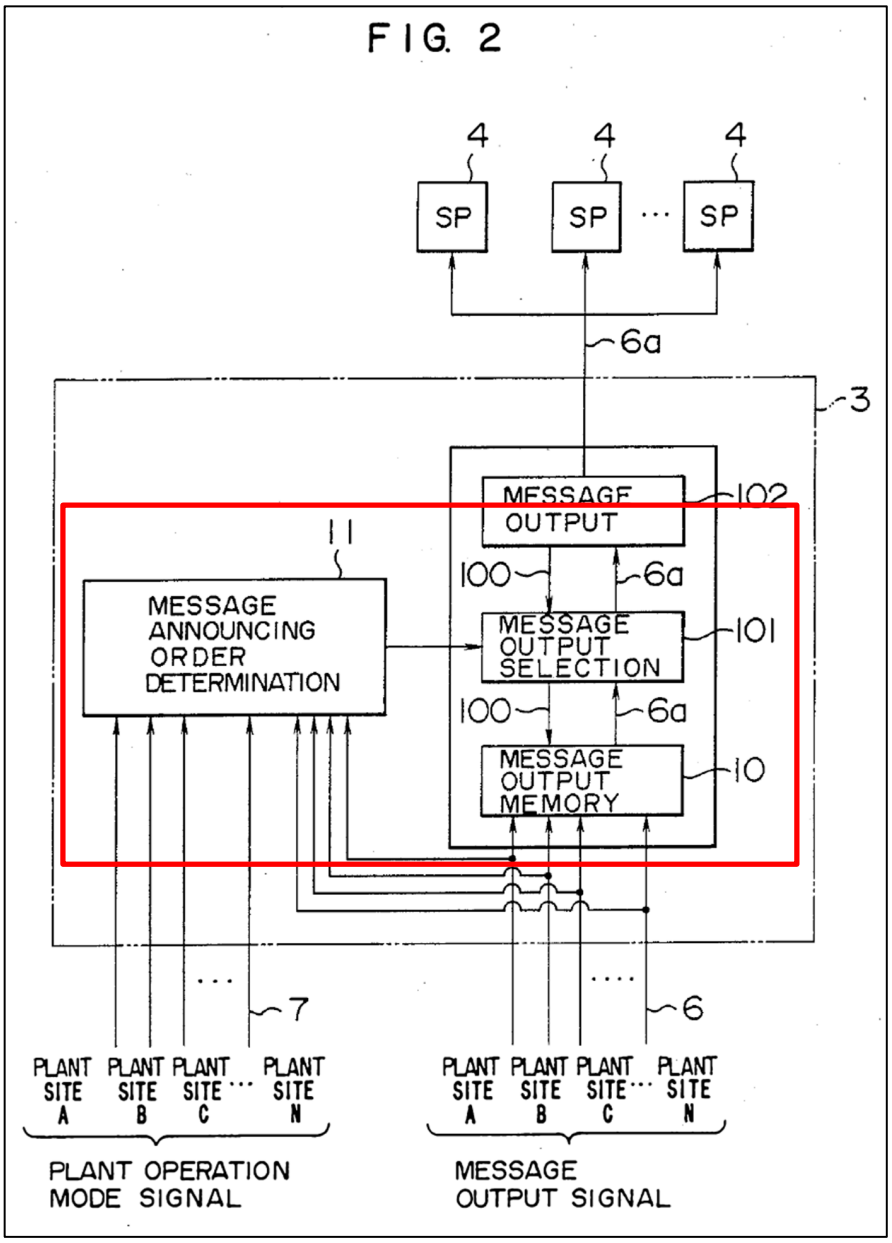

Ex[1007], Fig. 2.

258. As previously discussed, Nigawara's Figure 2, shown above, depicts "voice message signal memory 10" where overlapping "[v]oice message output signals 6 from…the individual plants are stored" before they are announced in the priority order determined by the "message announcing order determination unit 11."

Ex[1007], 3:68-4:5. Therefore, "those voice message signals having priority lower than the others are announced with a suitable delay according to the priority order, so as to solve the problem of intermixture of announced messages." *Id.*, 7:23-28. Based on Nigawara's disclosure, a POSITA would have understood that lower priority messages announced with a suitable delay would be stored in voice signal memory 10 for the duration of that delay. *See also id.*, Abstract, 1:40-2:3, 2:59-3:2, 3:66-4:58, 6:35-7:2, 7:10-28.

259. Thus, Nigawara discloses *storing at least one message having a lower priority between the first and the second message based on the determination*.

h. 1[g]: playing the stored message subsequent to completing playing of the message having higher priority.

260. Nigawara discloses "*playing the stored message subsequent to completing playing of the message having higher priority*."

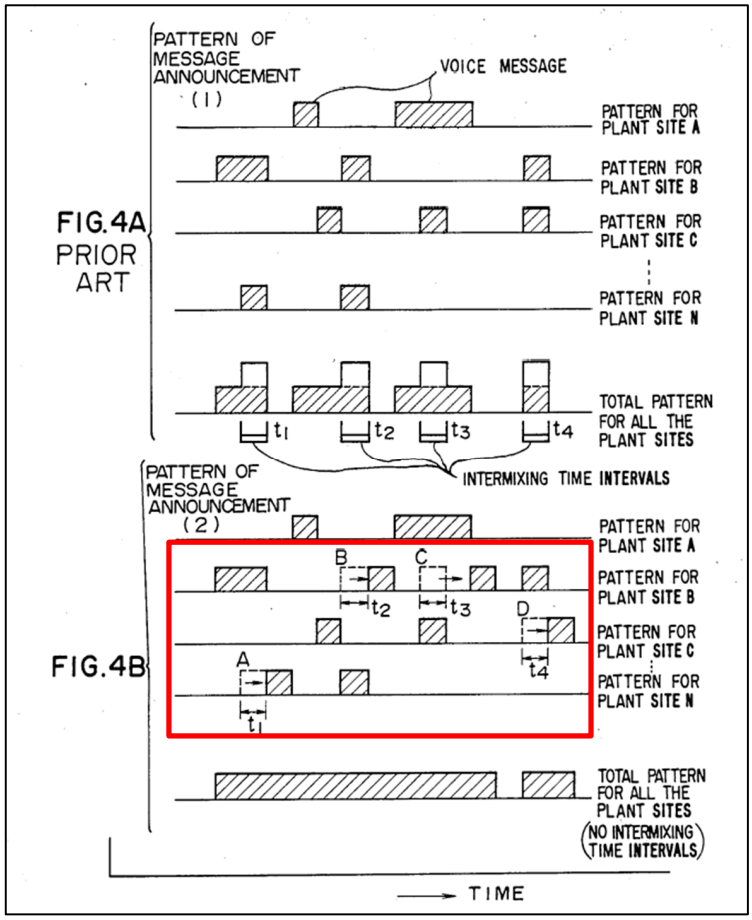

Ex[1007], Figs. 4A-4B.

261. As previously discussed, "those voice message signals having priority lower than the others" (Ex[1007], 7:24-25) are "stored in a voice message signal memory 10" (*Id.*, 4:2) before being "announced with a suitable delay according to the priority order, so as to solve the problem of intermixture of announced messages." *Id.*, 7:25-28. For example, Figures 4A and 4B show "that in time intervals t_1, t_2, t_3 and t_4, where announced messages over-lap each other, those voice message signals having priority lower than the others are announced with a suitable

delay according to the priority order." *Id*., 7:22-26; *see also id.*, Abstract, 1:40-2:3, 2:59-3:2, 3:66-4:58, 6:35-7:2, 7:10-28.

262. Thus, Nigawara discloses *playing the stored message subsequent to completing playing of the message having higher priority*.

3. Claim 2

263. Nigawara discloses or at least renders obvious *the method of claim 1, wherein determining which message out of the first message and the second message should be stored and subsequently played comprises: calculating the priorities of the received messages; and comparing the priorities of the received messages.*

a. 2[pre]: The method of claim 1, wherein determining which message out of the first message and the second message should be stored and subsequently played comprises:

264. As described in §IX.C.2.e, Nigawara discloses "*determining which message out of the first message and the second message should be stored and subsequently played*." Thus, for all of the same reasons described for limitation 1[d], incorporated here, Nigawara also discloses or at least renders obvious *the method of claim 1, wherein determining which message out of the first message and the second message should be stored and subsequently played*.

b. 2[a]: calculating the priorities of the received messages; and

265. Nigawara discloses "*calculating the priorities of the received messages* [determining priority according to type, content, or plant operation]."

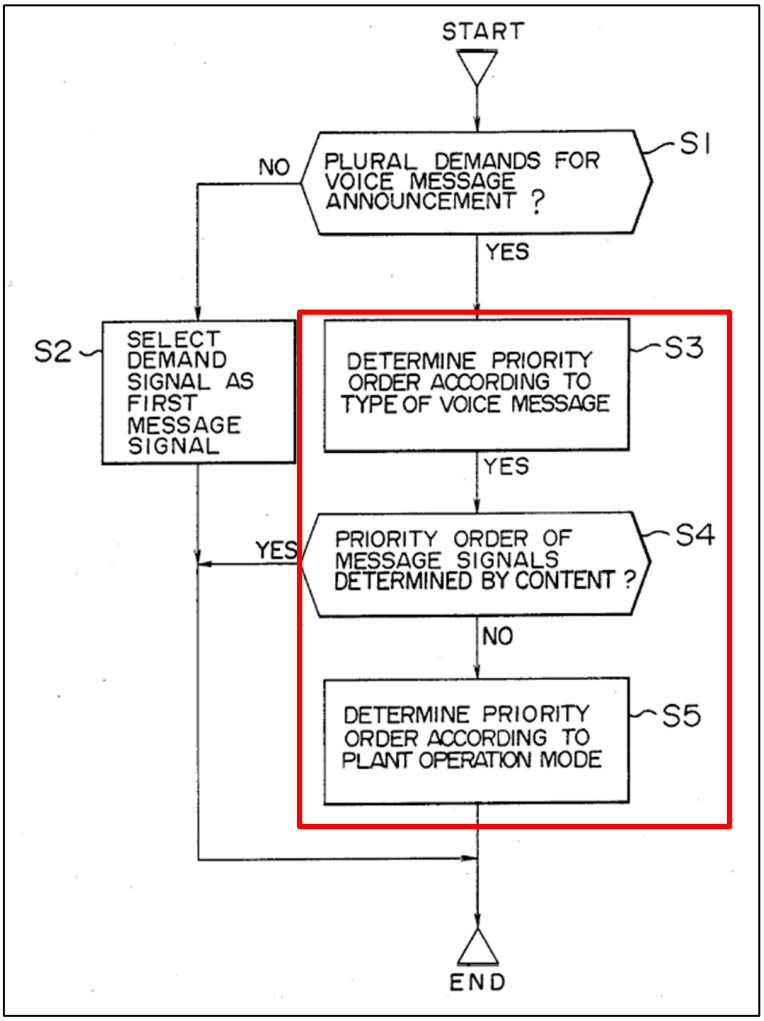

Ex[1007], Fig. 3.

266. As previously discussed, Nigawara discloses that "the message announcing order selection unit 3 determines the priority order of announcement of the voice messages according to the contents of the messages and the relative

importance of various pieces of information" as well as ""[p]lant operation mode information signals 7" Ex[1007], 3:35-41. These factors are "the basis of which the message announcing order selection unit 3 determines the priority order of announcement of the voice message." *Id.*, 3:45-47; §IX.C.2.d.

267. Based on the consideration of message content, relative importance, and plant operation mode as described in Nigawara, a POSITA would have understood that Nigawara's message announcing order selection unit 3 process involves *calculating the priorities of the received messages* in order to determine the priority order of message announcements.

268. Thus, Nigawara discloses or at least renders obvious *calculating the priorities of the received messages*.

c. 2[b]: comparing the priorities of the received messages.

269. Nigawara discloses "*comparing the priorities of the received messages* [determine priority order based on type, content, or plant operation]."

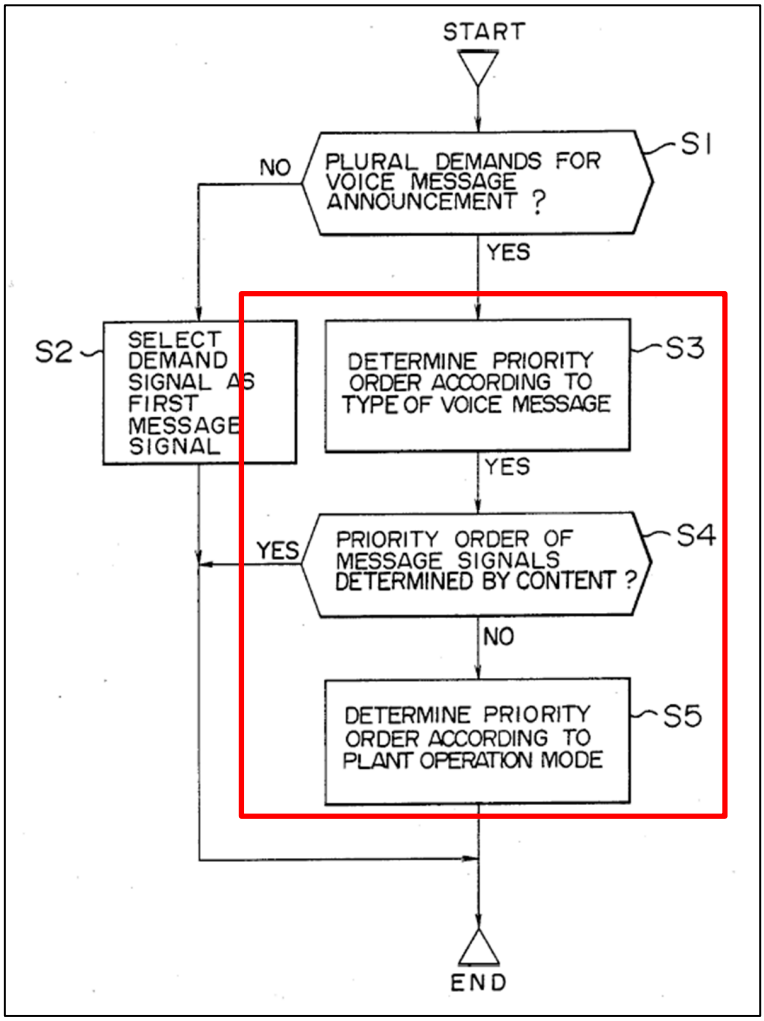

Ex[1007], Fig. 3.

270. Nigawara discloses that "when plural, for example two, voice message signals 6 are simultaneously applied, the priority order and the type of voice message signals 6" are determined and sent on to "step S3 to classify them into a first message signal and a second message signal according to the predetermined priority order." Ex[1007], 6:37-42. Further, Nigawara requires that "voice messages are announced from speakers 4 according to the priority 40 order" (Ex[1007], 3:33-41)

and "those voice message signals having priority lower than the others are announced with a suitable delay according to the priority order, so as to solve the problem of intermixture of announced messages." *Id.*, 7:23-28.

271. Based on Nigawara's disclosure of classifying messages into a first message signal and a second message signal according to predetermined priority order, a POSITA would have understood that the method of *Nigawara* involves *comparing the priorities of the received messages* in order to ensure that "voice messages are announced from speakers 4 according to the priority 40 order." Ex[1007], 3:33-41.

272. Thus, Nigawara discloses or at least renders obvious *comparing the priorities of the received messages*.

4. Claim 3: The method of claim 1, wherein the predefined parameter comprises a bandwidth requirement of the received messages.

273. Nigawara discloses "*the predefined parameter comprises a bandwidth requirement of the received messages*."

274. The only disclosure of "*a bandwidth requirement*" in the '802 Patent is its inclusion, without definition in a list of possible pre-defined parameters.[5]

[5] Patent Owner appears to construe this term to mean a parameter used "to calculate resource requirements and optimize the system resources." Ex[1011], p.10.

275. Nigawara "determines the priority order of announcement of the voice messages" to eliminate "the possibility of operators' mishearing because of intermixture of announced messages." Ex[1007], 3:33-39, 7:7-9. The issue of intermixture exists because there are a limited number of speakers for announcing messages, but there can be "a plurality of demands for announcement of voice messages exist[ing] simultaneously." *Id.*, 3:33-39. Therefore, a POSITA would understand Nigawara's need for prioritization to be describing a bandwidth constraint–e.g., the number of messages that can be simultaneously announced and comprehended.

276. Thus, Nigawara discloses or at least renders obvious *the method of claim 1, wherein the predefined parameter comprises a bandwidth requirement of the received messages*.

5. Claim 4: The method of claim 1, wherein the predefined parameter comprises a type of the received messages.

277. Nigawara discloses "*the predefined parameter comprises a type of the received messages* [e.g., determining priority according to type,]."

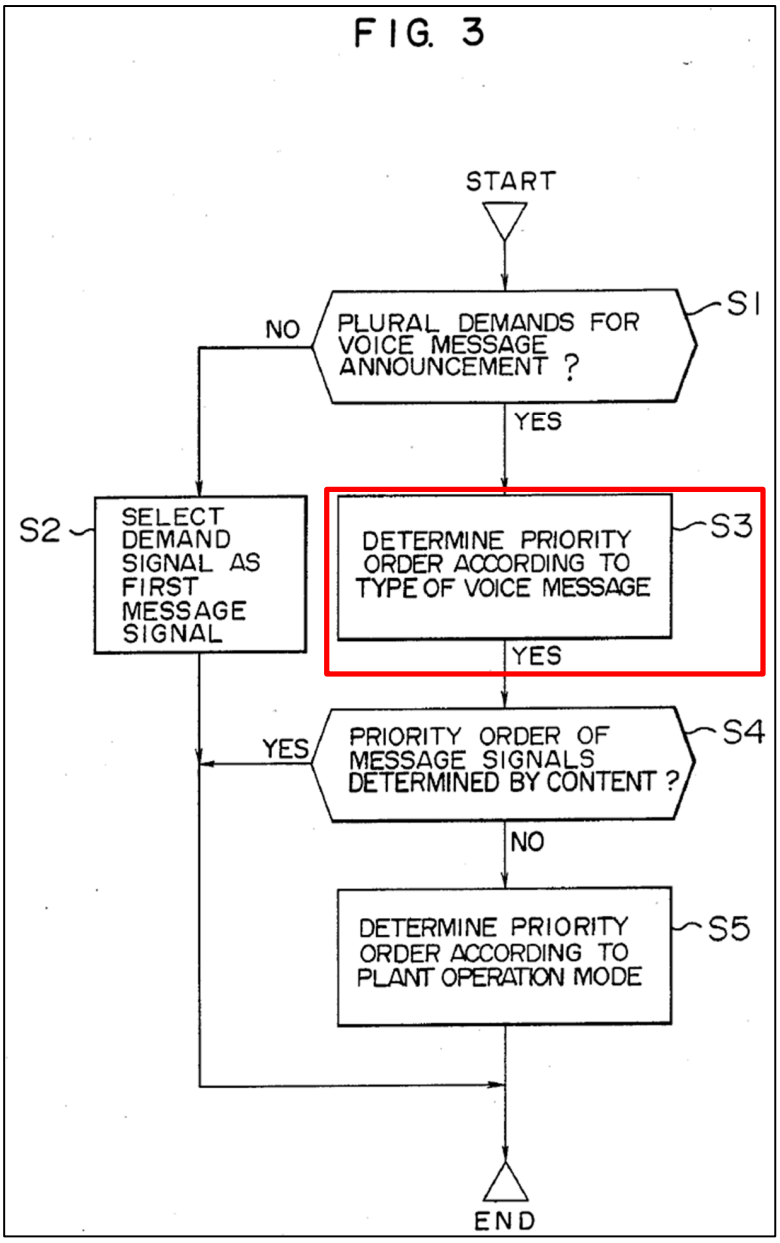

Ex[1007], Fig. 3.

278. Nigawara expressly discloses determining one or more priorities for the first and second messages based on a type of the received messages. As shown in Figure 3 above, Nigawara discloses that step S3 involves "DETERMINE PRIORITY ORDER ACCORDING TO TYPE OF VOICE MESSAGE."

Ex[1007], Fig. 3 (S3). Nigawara explains that "when plural…voice message signals 6 are simultaneously applied, the priority order and the type of voice message signals 6 shown in Table 1 [shown below] are referenced in step S3 to classify them into a first message signal and a second message signal according to the predetermined priority order." Ex[1007], 6:36-42; *see also id.*, 4:39-58, and 6:23-7:2.

TABLE 1

Example of determination of priority order according to contents of voice messages (type of message output signals 6)	
Priority order	Contents of Message
1st	Voice message announcing serious trouble in main machinery and equipments

TABLE 1-continued

Example of determination of priority order according to contents of voice messages (type of message output signals 6)	
Priority order	Contents of Message
2nd	Voice message announcing medium trouble in large auxiliary machinery and equipment
3rd	Voice message announcing a change in operating conditions of main machinery and equipment
4th	Voice message teaching actuation of automatically controlled machinery and equipment
5th	Voice message announcing slight trouble in valves and small auxiliary machinery and equipment
6th	Voice message announcing a change in operating conditions of auxiliary machinery and equipment
7th	Voice message announcing guidance for actuation of automatically controlled machinery and equipment

279. Thus, Nigawara discloses or at least renders obvious *the method of claim 1, wherein the predefined parameter comprises a type of the received messages*.

6. Claim 5: The method of claim 4, wherein the type of received messages being one of a group comprising audio, video, text, and image.

280. Nigawara discloses "*the type of received messages being one of a group comprising audio, video, text, and image* [e.g., information signals 5]."

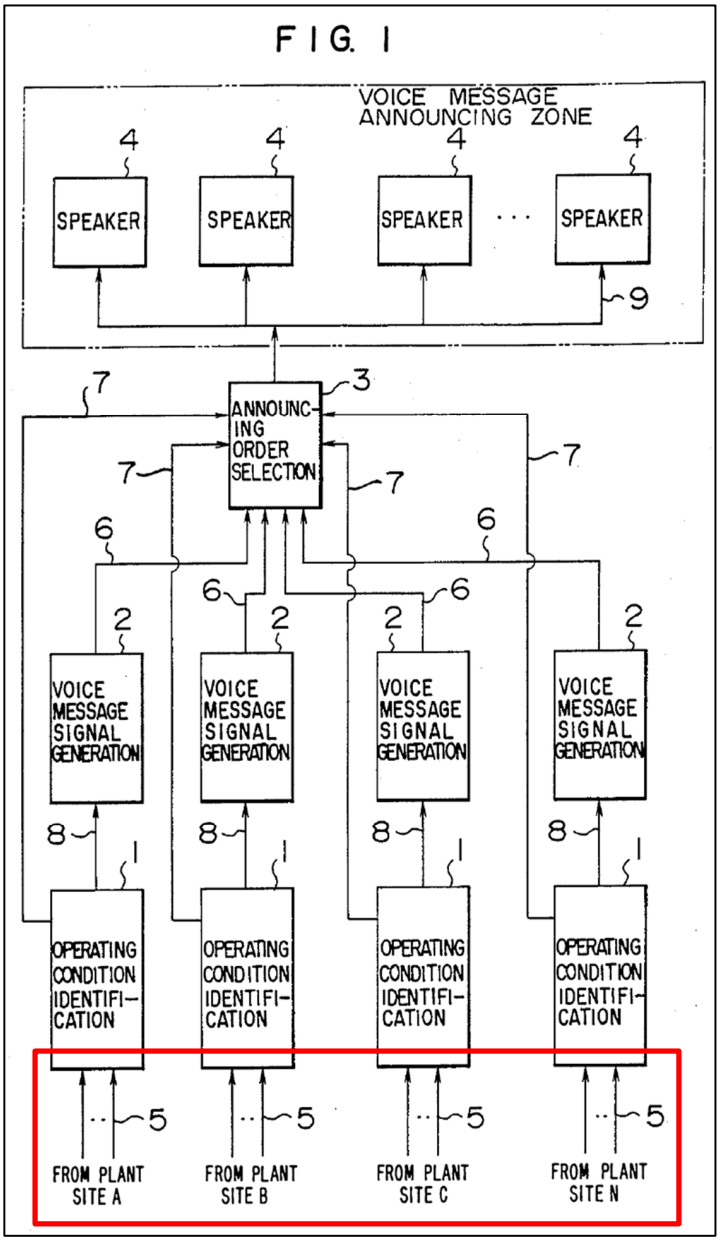

Ex[1007], Fig. 1.

281. Claim 5 only specifies that *the type of received messages* be one of *audio, video, text, and image*.

282. Nigawara teaches that the received "information signals 5," shown in Figure 1 above, "a voice message [*audio*] signal such as an announcement "water

data is normal" announced by the operator who is observing the operating conditions of the plant site A, a machinery rotation noise signal generated from the plant site A, and a *video signal* representing the state of combustion in the furnace of the boiler of plant site A." Ex[1007], 2:31-41 (emphasis added).

283. Thus, Nigawara discloses *the method of claim 4, wherein the type of received messages being one of a group comprising audio, video, text, and image*.

7. Claim 6: The method of claim 1, wherein determining the priority comprises assigning priorities to the first message and the second message based on inputs from a user.

284. Nigawara discloses "*determining the priority comprises assigning priorities to the first message and the second message based on inputs from a user*."

285. As discussed previously, Nigawara "determines the priority order of announcement of the voice messages according to the contents of the messages and the relative importance of various pieces of information." Ex[1007], 3:36-39. This information is received in the form of "information signals 5," which can include, among other things, "a voice message signal such as an announcement 'water data is normal' announced by the operator who is observing the operating conditions of the plant site." *Id.*, 2:36-38. A POSITA would recognize that inputs would include, for example, keystrokes, live or recorded voice messages, or handwriting.

286. Thus, Nigawara discloses *the method of claim 1, wherein determining the priority comprises assigning priorities to the first message and the second message based on inputs from a user*.

8. Claim 7: The method of claim 1, further comprising informing an operator the time of receipt of a message while playing the first message and the second message.

287. Nigawara discloses "*informing an operator the time of receipt of a message while playing the first message and the second message*."

288. Nigawara's voice announcement system is designed to announce messages of varying priorities as shown in Table 1 and that are related to various timings, as shown in Table 2. Additionally, Nigawara discloses that, due to various priority conflicts, some messages "are announced with a suitable delay according to the priority order, so as to solve the problem of intermixture of announced messages." *Id.*, 7:25-28. Based on these considerations, it would have been obvious to a POSITA to include time of receipt information with each voice announcement. It was well known that time stamps could and should be included with messages. Ex[1005], Appendix E, §11.31. This would provide a unique identifier or index mechanism for storing messages, as well as ensuring that operators would be alerted to how long a lower priority announcement may have been delayed, and historical analysis and context determination for aligning events with messages. For example, if a lower priority alert such as "a voice message

signal such as an announcement "water data is normal" announced by the operator who is observing the operating conditions of the plant site A," was delayed and announced with a time stamp, other operators would be able to assess how relevant that information is and decide if they would need to check the "water data" of plant site A again. Ex[1007], 2:34-38.

289. Thus, Nigawara renders *the method of claim 1, further comprising informing an operator the time of receipt of a message while playing the first message and the second message* obvious.

9. Claim 11: A method of managing communication in a communication system, the communication system receiving messages from a plurality of channels, the method comprising: receiving a first message on a first dedicated channel from amongst the plurality of channels at the communication system, the plurality of channels being dedicated to different entities, the first dedicated channel being dedicated to receiving messages from a first entity; receiving a second message on a second dedicated channel being dedicated to receiving messages from a second entity from amongst the plurality of channels at the communication system, the second message overlapping with the first message in time; prioritizing the first and second messages based on at least one predefined parameter; determining which message out of the first message and the second message should be stored and subsequently played based on the second message overlapping with the first message in time and one or more priorities assigned to the first and the second message; playing the message having the highest priority; storing the message having lower priority in a queue on the basis of the determination and the prioritization; checking periodically the status of the message being played; and playing the stored message having the highest priority.

290. Claim 11 is nearly identical to claim 1. The only differences are that claim 11 recites "*prioritizing the first and second messages based on at least one predefined parameter*," instead of "*determining one or more priorities for the first message received on the first dedicated channel from the first entity and the second message received on the second dedicated channel from the second entity based on at least one pre-defined parameter*;" "*storing the message having lower priority in a queue*;" and "*checking periodically the status of the message being played*."

Ex[1001], cls. 1, 11; *Bancorp*, 687 F.3d at 1277 (asserted system and medium claims treated as no different from the asserted method claims).

291. A queue can take various forms, but any queue is essentially multiple data elements, stored in some sort of sequence for later use, which is based in some form on that stored sequence.

292. As discussed previously, Nigawara discloses "those voice message signals having priority lower than the others are announced with a suitable delay [*stored*] according to the priority order [*in a queue*], so as to solve the problem of intermixture of announced messages." Ex[1007], 7:24-28. Then, after the highest priority message is announced "the priority order is determined again according to the flow shown in FIG. 3," because "the message announcing order determination unit 11 may have received one or more voice message signals 6" during the announcement. *Id.*, 6:55-57.

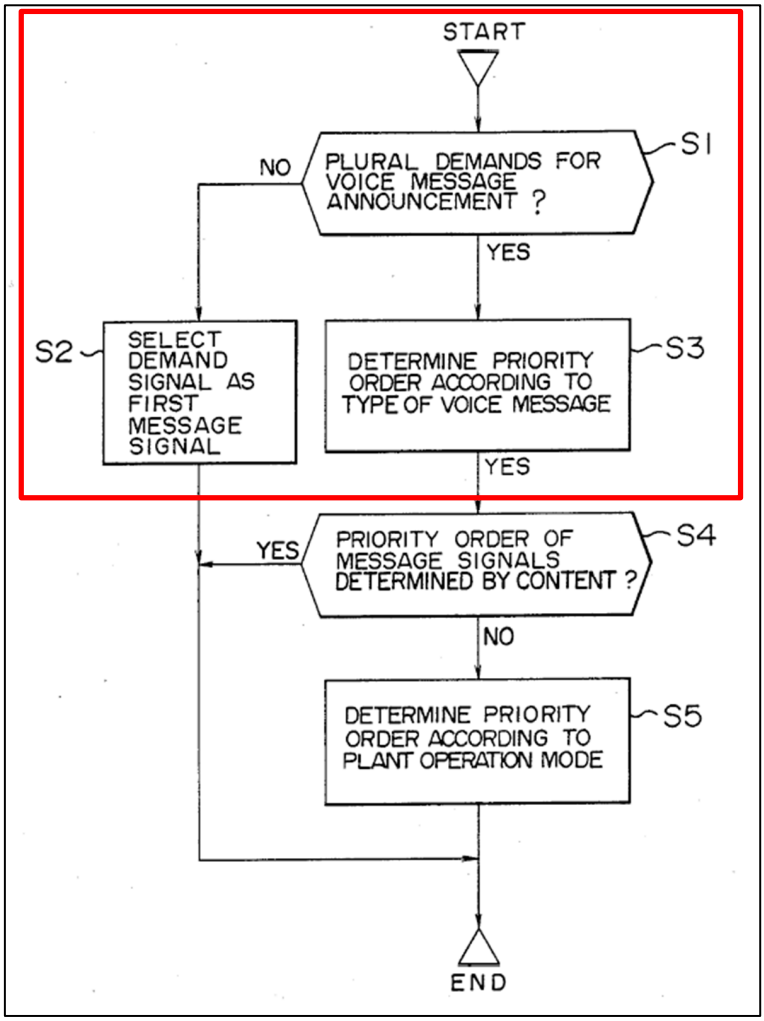

Ex[1007], Fig. 3.

293. Therefore, Nigawara discloses storing lower priority messages in a queue, based on priority order, as well as periodically checking the status of the priority queue to ensure that the highest priority message is always being played. Thus, for all these reasons as well as the same reasons described for claim 1, incorporated here, Nigawara also invalidates claim 11. *Supra* §IX.C.2.e.

10. Claim 12: The method of claim 11 further comprising informing a user the time of receipt of a message while plying the message.

294. Claim 12 is nearly identical to claim 7. The only difference is that claim 12 depends on claim 11. Ex[1001], cls. 7, 12. Thus, for all of the same reasons described for claims 7 and 11, incorporated here, Nigawara also invalidates claim 12.

11. Claim 13: A communication system for managing communication, the communication system receiving messages from a plurality of channels, the communication system comprising: means for receiving a plurality of messages on the plurality of channels, the plurality of messages received including a first message received from a first dedicated channel dedicated to receiving messages from a first entity and a second message received from a second dedicated channel dedicated to receiving messages from a second entity; means for playing a received messages having the highest priority, the plurality of received messages being prioritized based on at least one predefined parameter; a central conferencing system comprising: means for prioritizing the received plurality of messages including the first message from the first dedicated channel and the second message from the second dedicated channel based on the predefined parameter; means for determining which messages out of the received messages should be stored and subsequently played based on messages overlap-ping in time and one or more priorities assigned to the first and the second message; means for sending the messages for playing based on the associate priority; and means for storing the messages other than the one sent for playing in a queue based upon the associated priority.

295. As discussed previously, claim 13 is nearly identical to claim 1. The only differences are that claim 13 recites "*A communication system for managing*

communication, the communication system receiving messages from a plurality of channels, the communication system comprising;" "*a central conferencing system comprising*;" and "*storing the messages other than the one sent for playing* ***in a queue***." Ex[1001], cls. 1, 13; *Bancorp*, 687 F.3d at 1277 (asserted system and medium claims treated as no different from the asserted method claims). Additionally, as discussed above, this claim is governed by 35 U.S.C. § 112, ¶6 and the functions and corresponding structure discussion is incorporated herein. *Supra* §VI.F.1, §IX.B.13.

296. For limitation 13[a], Nigawara discloses the structure "plural independent voice message announcing devices," "provided for each of the [] plant sites" that perform the function of receiving "[i]nformation signals 5 indicative of operating conditions of [each] plant site." Ex[1007], 1:56-62,2:27-32, 3:28-29.

297. For limitation 13[b], Nigawara discloses the structure "speakers 4" from which "the voice messages are announced…according to the priority 40 order." *Id.*, 3:33-41.

298. For limitation 13[d] and 13[e], Nigawara discloses the structure "message announcing order selection unit 3" which performs the function of "determin[ing] the priority order of announcement of the voice messages" based on the type of message output signals and plant operation mode signals as shown in Tables 1 and 2" below. Ex[1007], 3:33-39.

TABLE 1

Example of determination of priority order according to contents of voice messages (type of message output signals 6)

Priority order	Contents of Message
1st	Voice message announcing serious trouble in main machinery and equipments

TABLE 1-continued

Example of determination of priority order according to contents of voice messages (type of message output signals 6)

Priority order	Contents of Message
2nd	Voice message announcing medium trouble in large auxiliary machinery and equipment
3rd	Voice message announcing a change in operating conditions of main machinery and equipment
4th	Voice message teaching actuation of automatically controlled machinery and equipment
5th	Voice message announcing slight trouble in valves and small auxiliary machinery and equipment
6th	Voice message announcing a change in operating conditions of auxiliary machinery and equipment
7th	Voice message announcing guidance for actuation of automatically controlled machinery and equipment

TABLE 2

Example of determination of priority order according to plant operation modes provided by plant operation mode signals 7 (secondary determination)

Priority order	Operation mode
1st	Starting stage (after parallel-in)
2nd	Starting stage (before parallel-in)
3rd	Stopping stage (before parallel-off)
4th	Stopping stage (after parallel-off)
5th	Steady operation (changing load)
6th	Steady operation (fixed load)
7th	Not in operation

299. For limitation 13[f], Nigawara discloses "a message output unit 102" structure that performs the functions of sequentially receiving "the voice message signals" and sending them to be "announced from the speakers 4." *Id.*, 4:16-24.

300. For limitation 13[g], Nigawara discloses the structure "voice message signal memory 10" where overlapping "[v]oice message output signals 6 from…the individual plants are stored" before they "are sequentially applied to a message output unit 102." *Id.*, 3:68-4:21.

301. Further, Nigawara teaches "those voice message signals having priority lower than the others are announced with a suitable delay [*stored*] according to the priority order [*in a queue*], so as to solve the problem of intermixture of announced messages." Ex[1007], 7:24-28. Nigawara is intended to solve the problem of intermixture of announced messages in an industrial environment. However, as discussed in §IX.C.1 a POSITA would have understood that the "method and system for announcing, by voice messages" described by Nigawara would be equally applicable to other instances where the intermixture of messages poses a problem. *Id.*, 1:6-7. For example, it would have been obvious to a POSITA that *a central conferencing system* would have the problem of intermixing messages and thus, implementing Nigawara's announcing order selection unit 3 would be an obvious way to solve the problem.

302. Thus, for the above and all of the same reasons described for claim 1, incorporated here, Nigawara also invalidates claim 13. *Supra* §IX.C.3.

12. Claim 14: A communication system for managing communication, the communication system receiving messages from a plurality of channels, the communication system comprising: a receiver module configured to receive a plurality of messages on the plurality of channels, the plurality of messages received including a first message received from a first dedicated channel dedicated to receiving messages from a first entity and a second message received from a second dedicated channel dedicated to receiving messages from a second entity; a player module for playing a received message having the highest priority, the plurality of received messages being prioritized based on at least one predefined parameter; a central conferencing system comprising: a prioritizing module configured to prioritize of messages including the first message received on the first dedicated channel and the second message received on the second dedicated channel based on the pre-defined parameter; a determiner configured to determine which messages out of the received messages should be stored and subsequently played based on the second message overlapping with the first message in time and one or more priorities assigned to the first and the second message; a sender module to send a message for playing based on the associated priority; and a storage medium configured to store the messages in a queue based upon the associated priority and the determination.

303. Claim 14 is nearly identical to claim 13 and, as discussed above, this claim is governed by 35 U.S.C. § 112, ¶6; §VI.F.1; *Bancorp*, 687 F.3d at 1277 (asserted system and medium claims treated as no different from the asserted method claims). The only difference is that claim 14 uses the nonce term "module" in place

of "means for" used in claim 13. Therefore, as discussed for claims 1 and 13, Nigawara in view of Doolin discloses the claimed modules and functions. *Supra* §§IX.C.2, IX.C.11. Thus, for all of the same reasons described for claim 1 and claim 13, incorporated here, Nigawara also invalidates claim 14. *Supra* §§IX.C.2, IX.C.11.

13. Claims 15-16

15[a]	The communication system of claim 14, wherein the prioritizing module comprises:
15[b]	a priority calculator for calculating the priority of the received messages; and
15[c]	a comparison module for comparing the priorities of the plurality of received messages.
16	The communication system of claim 14, wherein the central conferencing system further comprises an alert module for informing an operator the time of receipt of a message while playing the message.

304. Claims 15-16 are nearly identical to claims 2, and 7. The only difference is that claims 15-16 depend on claim 14 and include additional module terms discussed below. Ex[1001], cls. 2, 7, 15-16. The proposed interpretation discussed in §VI.F.1, and the functions and structure cited in §IX.B.15, are incorporated herein.

305. For limitation 15[b] and 15[c], similar to limitation 13[d] and 13[e] discussed above, Nigawara discloses the structure "message announcing order selection unit 3" which performs the function of "determin[ing] the priority order of

announcement of the voice messages" based on the type of message output signals and plant operation mode signals as shown in Tables 1 and 2" below. Ex[1007], 3:33-39.

TABLE 1

Example of determination of priority order according to contents of voice messages (type of message output signals 6)

Priority order	Contents of Message
1st	Voice message announcing serious trouble in main machinery and equipments

TABLE 1-continued

Example of determination of priority order according to contents of voice messages (type of message output signals 6)

Priority order	Contents of Message
2nd	Voice message announcing medium trouble in large auxiliary machinery and equipment
3rd	Voice message announcing a change in operating conditions of main machinery and equipment
4th	Voice message teaching actuation of automatically controlled machinery and equipment
5th	Voice message announcing slight trouble in valves and small auxiliary machinery and equipment
6th	Voice message announcing a change in operating conditions of auxiliary machinery and equipment
7th	Voice message announcing guidance for actuation of automatically controlled machinery and equipment

TABLE 2

Priority order	Example of determination of priority order according to plant operation modes provided by plant operation mode signals 7 (secondary determination) Operation mode
1st	Starting stage (after parallel-in)
2nd	Starting stage (before parallel-in)
3rd	Stopping stage (before parallel-off)
4th	Stopping stage (after parallel-off)
5th	Steady operation (changing load)
6th	Steady operation (fixed load)
7th	Not in operation

306. For limitation 16, Nigawara discloses the structure "speakers 4" which perform the function of "announc[ing messages] with a suitable delay according to the priority order, so as to solve the problem of intermixture of announced messages." *Id.*, 7:25-28. As previously discussed, it would have been obvious to a POSITA to include time of receipt information with each voice announcement. *Supra* §IX.C.8.

307. Thus, for all of the same reasons described for claims 2, 7, and 14, incorporated here, Nigawara also invalidates claims 15-16. *Supra* §§IX.C.3, IX.C.8, IX.C.12.

14. Claim 17: A central conferencing system for managing a plurality of messages received by a communication system, the central conferencing system comprising: a receiver module configured to receive a plurality of messages on the plurality of channels, the plurality of messages received including a first message received from a first dedicated channel dedicated to receiving messages from a first entity and a second message received from a second dedicated channel dedicated to receiving message from a second entity; a prioritizing module for prioritizing the received messages based on at least one predefined parameter, the prioritizing module comprises: a priority calculator for calculating the priority of the received messages including the first message received on the first dedicated channel and the second message received on the second dedicated channel; and a comparison module for comparing the priorities of the plurality of received messages; a sender module for sending the messages with the highest priority to the player module for playing: a determiner configured to determine which messages out of the received messages should be stored and subsequently played based on the second message overlapping with the first message in time and one or more priorities assigned to the first and the second message; a storage module for storing the messages from amongst the plurality of messages that are not being played; and an alert module for informing a user the time of receipt of a message while playing the message.

308. Claim 17 is nearly identical to the combination of claims 14-16. Ex[1001], cls. 14-17. The only differences are that the preamble of claim 17 is "*A central conferencing system for managing a plurality of messages received by a communication system, the central conferencing system comprising:*" instead of "*A communication system for managing communication, the communication system receiving messages from a plurality of channels, the communication system*

comprising:," and "*a storage module for storing the messages from amongst the plurality of messages that are not being played;*" instead of "*a storage medium configured to store the messages in a queue based upon the associated priority and the determination.*" Ex[1001], cls. 14-17; *Bancorp*, 687 F.3d at 1277 (asserted system and medium claims treated as no different from the asserted method claims).

309. Therefore, for these and all of the same reasons described for claims 14-16, incorporated here, Nigawara also invalidates claim 17. *Supra* §§IX.C.12-IX.C.13.

15. Claim 18: An apparatus for managing communication in a communication system, the communication system receiving messages on a plurality of channels, the apparatus comprising: a processing system including a processor coupled to a display and us-er input device; and a machine-readable medium including instructions executable by the processor comprising: one or more instructions for receiving a plurality of messages on the plurality of channels, the plurality of messages received including a first message received from a first dedicated channel to receiving messages from a first entity and a second message received from a second dedicated channel dedicated to receiving messages from a second entity; one or more instructions for playing the message having the highest priority, the priority of the received messages including the first message and the second message being determined based on at least one predefined parameter; one or more instructions for determining which messages out of the received m messages should be stored and subsequently played based on messages overlapping in time and one or more priorities assigned to the first and the second message; one or more instructions for playing the stored messages subsequent to completing playing of the message having higher priority.

310. Claim 18 is nearly identical to claim 1. The primary difference is that claim 18 recites "*[a]n apparatus for managing communication in a communication system, the communication system receiving messages on a plurality of channels, the apparatus comprising: a processing system including a processor coupled to a display and user input device; and a machine-readable medium including instructions executable by the processor*." Ex[1001], cls. 1, 18; *Bancorp*, 687 F.3d at 1277 (asserted system and medium claims treated as no different from the asserted method claims).

311. In Figure 1 below, Nigawara depicts "the structure of a preferred embodiment of the automatic voice message announcing system of the present invention." Ex[1007], 2:6-8. A POSITA would have understood that this figure depicts the structure of an apparatus consisting of multiple inputs (*dedicated channels*), an equal number of condition identifiers, and voice signal processors, as well as an order selection processor and multiple speaker outputs. Although Nigawara is intended as an audio announcement system, based on the disclosed ability to receive "a video signal representing the state of combustion in the furnace of the boiler of plant site A," as well as user input from "the operator who is observing the operating conditions of the plant site A," Nigawara teaches to a POSITA that a display and user input device would be included in the processing apparatus shown in Figure 1, or that it would have been obvious to include them. Ex[1007], 2:37-41.

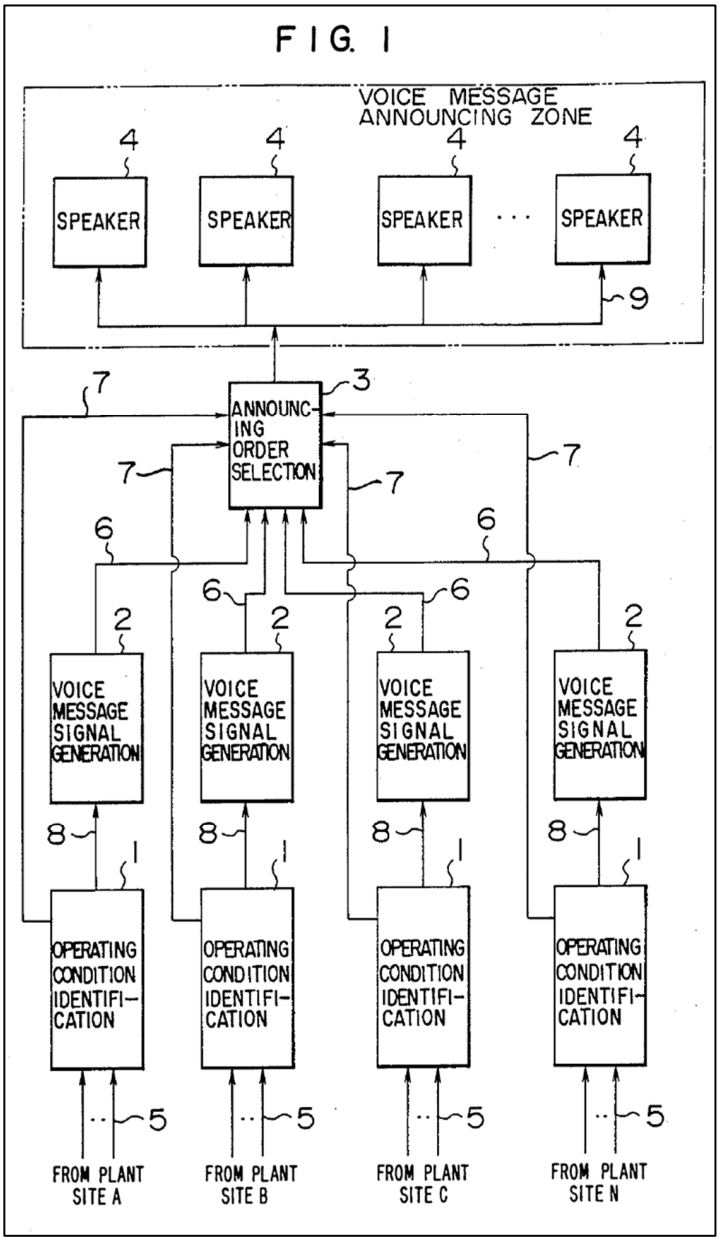

Ex[1007], Fig. 1.

312. Additionally, it would have been understood that announcing order selection 3 represents the *processor* and *machine-readable media* that would be required to run the system, shown in greater detail in Figure 2 below.

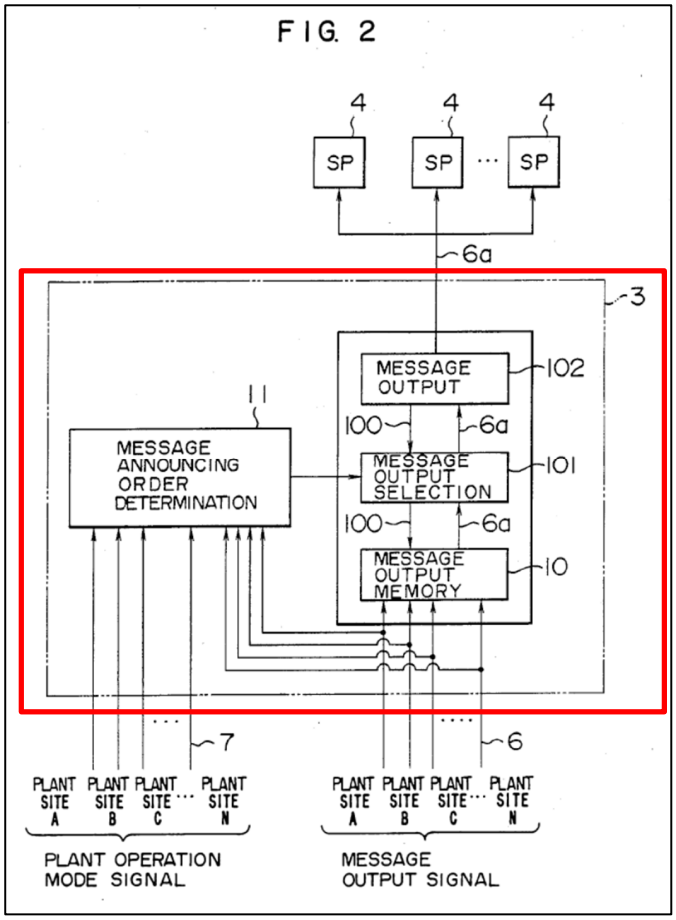

Ex[1007], Fig. 2.

313. Thus, based on the above, and for all of the same reasons described for claim 1, incorporated here, Nigawara also invalidates claim 18. *Supra* §IX.C.2.

16. Claim 19: A machine-readable medium including instructions executable by the processor comprising: one or more instructions for receiving a plurality of messages on the plurality of channels, the plurality of messages received including a first message received from a first dedicated channel dedicated to receiving messages from a first entity and a second message received from a second dedicated channel dedicated to receiving messages from a second entity; one or more instructions for playing the message having the highest priority, the priority of the received messages being including the first message and the second message being determined based on at least one pre-defined parameter; one or more instructions for determining which messages out of the received messages should be stored and subsequently played based on message overlapping in time and one or more priorities assigned to the first and the second message; one or more instructions for storing at least one message having a low-er priority; and one or more instructions for playing the stored messages subsequent to completing playing of the message having higher priority.

314. Claim 19 is nearly identical to claim 1. The primary difference is that claim 19 recites "*[a] machine-readable medium including instructions executable by the processor*." Ex[1001], cls. 1, 19; *Bancorp*, 687 F.3d at 1277 (asserted system and medium claims treated as no different from the asserted method claims).

315. In Figure 1 below, Nigawara depicts "the structure of a preferred embodiment of the automatic voice message announcing system of the present invention." Ex[1007], 2:6-8. It would have been obvious to a POSITA that this figure depicts the structure of an apparatus consisting of multiple inputs (*dedicated channels*), an equal number of condition identifiers, and voice signal processors, as

well as an order selection processor and multiple speaker outputs. It would have been obvious to a POSITA that these generation and selection modules would require *machine-readable medium including instructions executable by the* voice message signal and announcing order selection *processors* in order to function properly.

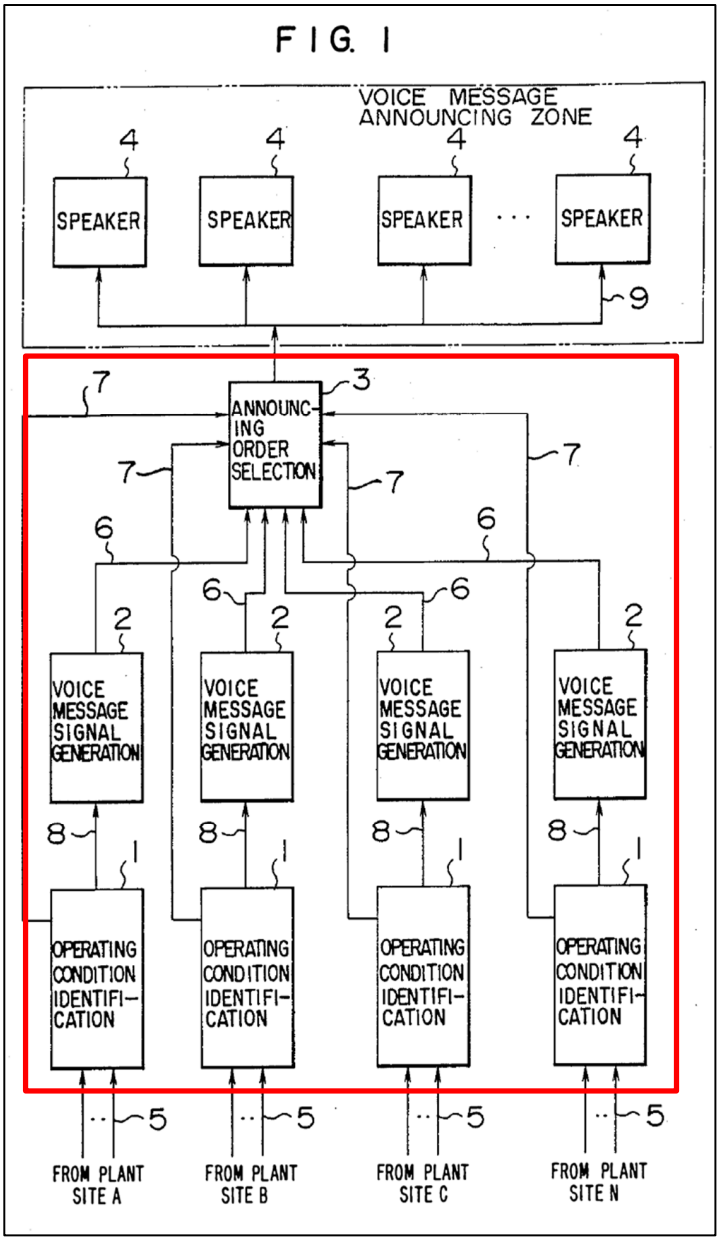

Ex[1007], Fig. 1.

316. Thus, based on the above, and for all of the same reasons described for claim 1, incorporated here, Nigawara also invalidates claim 19. *Supra* §IX.C.2.

17. Claim 20: The method of claim 1, wherein playing the message comprises playing the message having a higher priority between the first and second message without storing the message having the higher priority if no other message is being played.

317. Nigawara discloses "*playing the message comprises playing the message having a higher priority between the first and second message without storing the message having the higher priority if no other message is being played*."

318. Nigawara discloses that "when plural, for example two, voice message signals 6 are simultaneously applied, the priority order and the type of voice message signals 6" are determined and sent on to "step S3 to classify them into a first message signal and a second message signal according to the predetermined priority order." Ex[1007], 6:37-42. "When these two voice message signals 6 do not have same priority as determined in step S4…the first and second message signals are announced in that order." *Id.*, 6:42-46. Therefore, when the two overlapping messages do not have the same priority, the higher priority message is announced first, without delay. *See also id.*, 6:23-7:2.

319. Thus, Nigawara discloses *playing the message having a higher priority between the first and second message without storing the message having the higher priority if no other message is being played*.

18. Claim 21: The method of claim 1, wherein determining the priority comprises determining the priority based on the dedicated channel the first message and/or the second message is received on.

320. Nigawara discloses "*determining the priority comprises determining the priority based on the dedicated channel* [e.g., plant site] *the first message and/or the second message is received on.*"

321. As previously discussed, Nigawara teaches that information signals 5 are *messages* received on *channels dedicated* to each plant site A-N (*plurality of entities*). Ex[1007], 2:27-32; §IX.C.2.b. Nigawara further discloses that when overlapping signals "have the same priority" based on message type, "the plant operation mode information signals 7 are utilized to determine the priority order in step S5 according to the rule shown in Table 2." Ex[1007], 6:46-50. Because each channel is dedicated to a plant site, it would have been obvious to a POSITA that determining priority based on the operation mode of the plant would include determining priority based on the plant (*dedicated channel*) itself.

TABLE 2

Priority order	Example of determination of priority order according to plant operation modes provided by plant operation mode signals 7 (secondary determination) Operation mode
1st	Starting stage (after parallel-in)
2nd	Starting stage (before parallel-in)
3rd	Stopping stage (before parallel-off)
4th	Stopping stage (after parallel-off)
5th	Steady operation (changing load)
6th	Steady operation (fixed load)
7th	Not in operation

322. Thus, Nigawara discloses *the method of claim 1, wherein determining the priority comprises determining the priority based on the dedicated channel the first message and/or the second message is received on*.

D. Ground 3: Claims 3, and 8-10 are obvious over Nigawara in view of Doolin.

1. Doolin is also Analogous Art to the ’802 Patent

323. Doolin is also analogous art to the ’802 Patent at least because it is “reasonably pertinent to the particular problem with which the inventor is involved.” *Donner Tech.,* 979 F.3d at 1359. “A reference is reasonably pertinent if … it is one which, because of the matter with which it deals, logically would have commended itself to an inventor's attention in considering his problem.” *Scientific Plastic*

Products, 766 F.3d at 1359. Doolin is reasonably pertinent to the problem the inventor was trying to solve in the '802 Patent, because it is directed to transmitting "selectively prioritized" communications "based on bandwidth," or other factors. Ex[1008], [0009]. Those transmissions may be conducted via "Radio Frequency (RF) transceivers, laser transceivers, or other types of wireless communications mechanisms." *Id.*, [0017].

324. Similarly, the '802 Patent discloses that "the message audio portions can be prioritized and played back on the basis of the priority," (Ex[1001], 1:50-52) determined based on "the type of radio messages, the size of the radio messages, the bandwidth requirement, the channel from which radio messages are received, or any possible combination thereof." *Id.*, 4:59-62. Thus, Nigawara and Doolin are analogous art to the '802 Patent.

2. A POSITA Would Have Combined Nigawara with Doolin

325. Nigawara discloses "an automatic voice message announcing method and system for use in a plant such as a thermal power plant for sequentially announcing voice messages pertaining to different operating conditions without the possibility of intermixing messages even when a plurality of voice message announcing devices are provided in the plant." Ex[1007], 1:42-48. Intermixing of multiple messages is problematic because it can cause confusion, increases the likelihood the messages are ignored, and fails to distinguish high priority messages

from the rest. To avoid this intermixing, the voice messages "are necessarily announced in the order determined according to their relative importance, so that really important information required for the operators can be immediately announced without the possibility of operators mishearing because of intermixture of announced messages." *Id.*, 7:3-9. Although Nigawara discloses handling of received messages based on, among other things, "process signals representing the pressure, temperature, flow rate, etc. of various fluids (such as water, steam and oil)…a machinery rotation noise signal generated from the plant site A, and a video signal representing the state of combustion in the furnace of the boiler of plant site A," it may not expressly disclose how signals are received by the system. Ex[1007], 2:31-41.

326. Doolin discloses a remote monitoring system, in which "sensor network 10 implements a network wherein a processing system 14, 62, 66 receives data from the sensors 104-110, one or more of which are assigned one or more priority values via the browser client 66." Ex[1008], [0060]. These signals are then transmitted via "the antennas 42-54 [that] may represent Radio Frequency (RF) transceivers, laser transceivers, or other types of wireless communications mechanisms." *Id.*, [0017].

327. Because Nigawara does not specify how plant signals are received by the system, a POSITA would have looked to Doolin for additional details regarding

how to implement a system of transmitting prioritized remote sensor data of various types to a central server. The combined figure below demonstrates the sensed data being transmited from the sensor suites of Doolin's Figure 1 to the processing components of Nigawara's voice message announcement system (annotated figure showing transmitted data in blue and processing units in red).

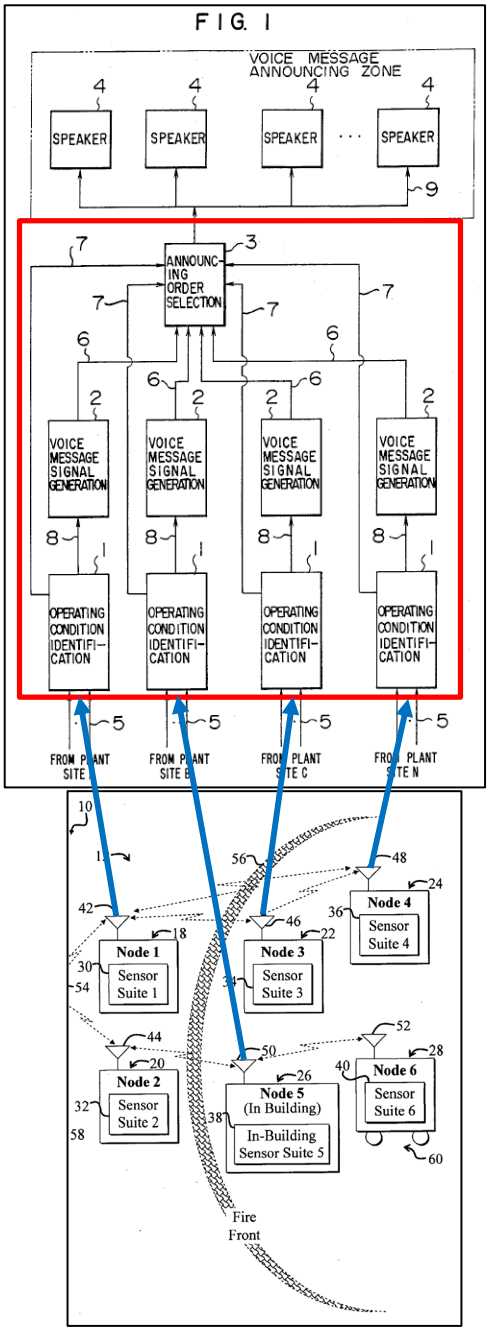

Ex[1007], Fig. 1; Ex[1008], Fig. 1 (excerpted).

328. A POSITA would have understood that implementing Doolin's sensor data transmission system into Nigawara's automatic voice announcement system to incorporate wireless signal transmissions in Nigawara's system, thus enabling

additional functionality, flexibility, and efficient installation and would have been a predictable combination of known elements reasonably expected to succeed. Wireless sensor data transmission was already being applied in Doolin, which suggests to a POSITA that the same technique could be used in Nigawara's system, which also deals with sensor data, with a reasonable expectation of success.

329. Thus, Nigawara and Doolin are analogous art, and a POSITA would have been motivated to combine them and could have combined them with a reasonable expectation of success.

3. Claim 8: The method of claim 1, wherein a message includes voice over internet protocol communications.

330. Nigawara in view of Doolin discloses "*a message includes voice over internet protocol communications*."

331. As previously discussed, Nigawara discloses receiving multiple types of messages, including "a voice message signal such as an announcement." Ex[1007], 2:35-36. However, Nigawara does not disclose how those messages are sent and received by the system.

332. Doolin discloses that "[i]n general, features of embodiments of the invention can work with any suitable types of network devices and network topology, protocol, communication links, etc. For example, communications among the sensor nodes 12 and the base station 14 can be by radio frequency,

infrared, laser, hardwired or other arrangement. Protocols such as session initiation protocol (SIP), *Internet protocol (IP)*, hypertext transfer protocol (HTTP), etc., can be used." Ex[1008], [0042].

333. Thus, Nigawara in view of Doolin *the method of claim 1, wherein a message includes voice over internet protocol communications*.

4. Claim 9: The method of claim 1, wherein a message includes mobile phone communications.

334. Nigawara in view of Doolin discloses "a message includes mobile phone communications."

335. As previously discussed, Nigawara discloses receiving multiple types of messages, however it does not disclose how those messages are sent and received by the system. Doolin discloses that messages containing sensor data may be transmitted through the system "using long range communication such as radio or *cell phone*." Ex[1008], [0026]. Additionally, Doolin notes that "it may be necessary or convenient to pre-install sensors, sensor networks and supporting network infrastructure such as base stations for satellite or *cell communication*" to ensure reliable communication when necessary. *Id.*, [0039].

336. Thus, Nigawara in view of Doolin discloses *the method of claim 1, wherein a message includes mobile phone communications*.

5. Claim 10: The method of claim 1, wherein a message includes radio communications.

337. Nigawara in view of Doolin discloses "*wherein a message includes radio communications* [e.g., via antennas 42-54]."

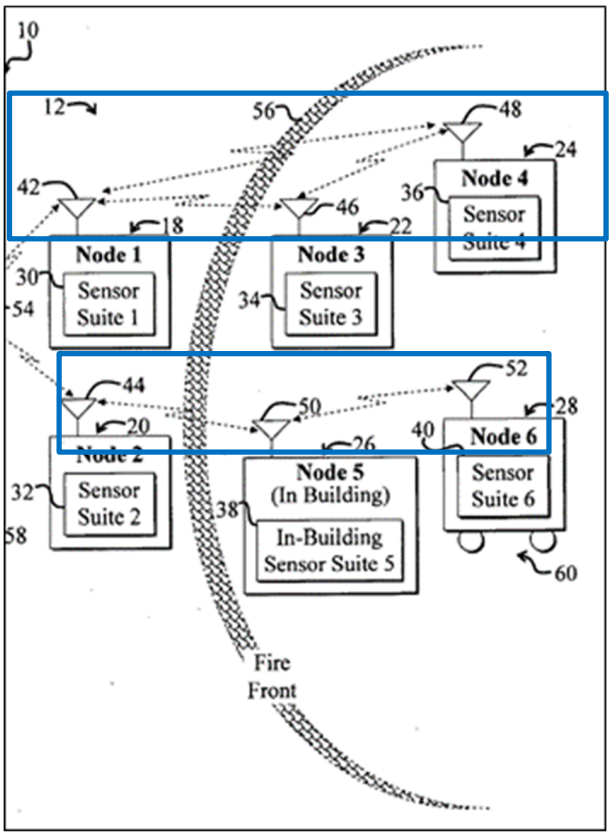

Ex[1008], Fig. 1 (excerpted).

338. As previously discussed, Nigawara discloses receiving multiple types of messages, however it does not disclose how those messages are sent and received by the system. Doolin discloses the ability to send and receive messages over a variety of wireless communication mechanisms. Ex[1008], [0017]. The antennas, shown in Figure 1 above, "may represent *Radio Frequency (RF)*

transceivers, laser transceivers, or other types of wireless communications mechanisms." *Id.* One such mechanism is to transmit data "using long range communication such as *radio*." [0026]. For example, "a primary function of the base station 14 is to act as a central *radio-frequency receiver/transmitter*… provid[ing] data from the nodes 12 to the client 66." *Id.*, [0040].

339. Thus, Nigawara in view of Doolin discloses *the method of claim 1, wherein a message includes radio communications*.

6. Claim 3: The method of claim 1, wherein the predefined parameter comprises a bandwidth requirement of the received messages.

340. Nigawara in view of Doolin discloses "*the predefined parameter comprises a bandwidth requirement of the received messages*."[6]

341. After implementing Doolin's sensor data transmission system in Nigawara's system, a POSITA would have also been motivated to implement Doolin's prioritization of sensed data "based on bandwidth" into Nigawara's prioritization scheme. Ex[1008], [0009]. Doolin's bandwidth prioritization is done "so that if there is a lack of resources (e.g., limited bandwidth), the sensor readings with higher priority can be communicated first." *Id.*, [0041]. For example, Doolin's prioritization at plant site A would transmit a "message

[6] *Supra* §IX.B.3 (discussing the '802 Patent's disclosure of "*a bandwidth requirement*" and Patent Owner's apparent construction).

announcing serious trouble in main machinery," the highest priority message content in Nigawara's system, before "guidance for actuation of automatically controlled machinery," the lowest priority message content. Ex[1007], 4:66-5:22. Then, Nigawara's announcing order selection unit would announce the highest priority "serious trouble" message from plant site A before messages received from any other plant site.

342. A POSITA would have been motivated to include this prioritization factor in Nigawara's system because "a lack of resources (e.g., limited bandwidth)," is a problem that frequently plagues data transmissions, particularly in systems that use multiple data types like Nigawara and Doolin. *Id.*, [0041]. Thus, it would have been understood that this inclusion would make Nigawara's system more robust and would have had a reasonable expectation of success.

343. Therefore, Nigawara in view of Doolin discloses *the method of claim 1, wherein the predefined parameter comprises a bandwidth requirement of the received messages*.

X. SECONDARY CONSIDERATIONS

344. During prosecution of the '802 Patent, the applicant did not identify any evidence of secondary considerations of non-obviousness tied to the claimed invention of the '802 Patent. I understand from counsel for Petitioner that Patent Owner in the co-pending district court litigation has not identified any evidence with

respect to secondary considerations of non-obviousness. I am aware of no evidence of secondary considerations that would meaningfully rebut a finding of obviousness.

345. Accordingly, there is no objective evidence of non-obviousness that might warrant a finding that Claims 1-21 are patentable. To the extent Patent Owner at a later date cites or provides any other evidence regarding secondary considerations, including any expert opinions, I reserve the right to supplement my analysis and opinions to address it.

XI. CONCLUSION

346. For at least the above-described reasons, in my opinion Claims 1-21 of the ’802 Patent would have been obvious to a POSITA based on the prior art references that I have cited and analyzed above.

347. In signing this declaration, I recognize that the declaration will be filed as evidence in a contested case before the Patent Trial and Appeal Board of the United States Patent and Trademark Office. I also recognize that I may be subject to cross-examination in the case and that cross-examination will take place within the United States. If cross-examination is required of me, I will appear for cross-examination within the United States during the time allotted for cross-examination.

348. I reserve the right to supplement my opinions in the future to respond to any arguments raised by Patent Owner and to consider any new information that becomes available to me.

349. I hereby declare that all statements made herein of my own knowledge are true and that all statements made on information and belief are believed to be true; and further that these statements were made with the knowledge that willful false statements and the like are punishable by fine or imprisonment, or both, under Section 1001 of Title 18 of the United States Code.

Executed in St. Louis, Missouri,
on August 21, 2023.

Respectfully submitted,

David Hilliard Williams

Appendix A

David Hilliard Williams

203-423-9015; dwilliams@LBSGlobe.com; www.E911-LBS.com

Expertise

- Location-Based Services (LBS)
- GPS Systems; Network-Based Location Determination Systems
- Wireless 911 (E911); NG911 Technology, Processes, Operations, and Funding
- Internet of Things (IoT); Edge Computing; Real-Time Location Systems (RTLS)
- Non-Cellular/Indoor/Sensor-based Location Systems, including: RFID, Wi-Fi/WPS, BLE/Bluetooth, Beacon-based RTLS; NFC/ DSRC; RF Fingerprint systems; Wearable systems; Hybrids/Combinations
- Expert Witness Litigation Support, Patent/Intellectual Property Services
- GPS/Cellphone Criminal and Civil Matter Forensics, using CDRs, RTT, PCMD, NELOS, EVDO, Geotab, Paraben, CellHawk, and Cellebrite
- Accident/Incident Reconstruction
- Internet of Things (IoT) Ecosystem (Sensors, Identification, Verification, Authentication, Interfaces, Edge, Network, Cloud, Data Network Management, Data Management, Analytics, Network Topologies, Integration)
- Location & IoT Data Privacy and Security; Location Sharing Policies, Systems/Methods; Device/User ID, Verification, Authentication
- Sensor Design; Sensor System Architecture and Interface Design; Sensor Arrays
- Wireless Communications Standards, e.g. Bluetooth/BLE, Zigbee, Wi-Fi, WPAN, etc.
- Microcontroller Design, Sensor Controls Design, IoT Design/Systems Integration
- Channel, Bandwidth Management; Network Design; Path Loss Management
- Location Data Aggregation, Anonymizing
- LIDAR/Radar Data Sourcing; Crowdsourcing
- Indoor Positioning & App Ecosystem Design
- Artificial Intelligence (AI), Machine Learning, Virtual/Augmented Reality in Mobile Apps
- Short/Longer-range Positioning Technologies
- LBS and IoT Enterprise/Consumer Product & Technical Strategy, Design and Buy/Build
- Mobile Devices/Systems Power Management
- Internet of Things (IoT), Cellular IoT (LTE-M, NB-IoT), LAN/PAN (WiFi, BLE), LPWAN (Sigfox, LoRaWAN, Mesh (Zigbee, RFID), Consumer/Industrial/Commercial/Govt. IoT
- Home, Office, and Industrial Automation System Design and Integration; Control System Design, including Remote Management, Monitoring, and Control; User Interface Design (visible, audible, tactile, virtual, augmented, context-sensitive, GUI-based, directional, wearables, implants, holographic, others)
- Health, Wearables Monitoring & Tracking
- Safety and Security, Surveillance Systems, Home Energy Management Systems
- Smart Card/Wallet/Purse, Contactless Payment Systems (e.g. Google Pay); SEs.
- Mobile Resource Management (MRM) Tracking and Management; Vehicle, Drone, Fleet/ELD/AOBRD, Worker/Driver, and Freight/Trailer & Asset Tracking/Mgmt.
- Telematics; ITS, Vehicle/Engine/ECM, PGN/SPN Tracking/Monitoring, V2V, V2I, V2N, Vehicle Communications Networks and Operating and Analytics Ecosystems including SAE standards (J1939, CAN, etc.)
- Connected Cars/Autonomous Vehicles (AV)
- Navigation Systems; PNDs; Geofencing; Route Optimization; Infotainment Apps/Interfaces
- Location-Based/Dependent Advertising, Search
- Map Data, Digital Mapping, Media/Advertising Interfacing/Management, GIS, & IoT IT
- Mobile Social/Business Networking;
- Location/Context-Centric Enterprise Process Reengineering, Integration, & Interoperability
- SMART location, Home, Wearables; SMART Buildings, Cities; All forms of location-related alerts, notifications, alarms; Barcodes, QR Codes
- Context/Presence-Based LBS and IoT; AI-based context determination and utilization
- M2M, Smart Grid/Energy Systems
- Engineering, Network, and IT Process Design and Organizational Capabilities Assessment
- LBS Big Data and Cloud Computing
- AI, MV, VR/AR Context/Location Integration

Professional Summary

David Hilliard Williams is an internationally-known expert in the wireless/mobile location and Internet of Things (IoT) fields and President and Founder of E911-LBS Consulting and E911-LBS Forensics Engineering, LLC. He specializes in wireless and IoT-based product and technology development and implementation, as well as Intellectual Property (IP)/patent and forensics litigation services involving technologies such as Global Positioning Satellite (GPS) systems; Network-based location determination technologies such as TDOA, ECID, and AFLT; Wireless 911 (E911) and Next Generation 911; Real-Time Location Systems (RTLS) including Radio Frequency Identification (RFID) systems, Wi-Fi-based positioning systems (WPS), BLE/Beacon-based location systems, Bluetooth, Near Field Communications (NFC), and alternative RTLS (Ultrasound, Infrared); Wearable Tags/Sensor tracking systems; Zigbee/Mesh networks; Pattern Matching; and various hybrids and combinations, as well as a broad array of IoT sensors and other systems, network (wireline and wireless, all generations), user interface, and technology enablers for management, monitoring, tracking, and control purposes, including in remote control/distributed ecosystems and associated use cases.

Mr. Williams is expert in the full range of business and consumer location-based services (LBS) and IoT applications enabled by these technologies, including safety, security, and intruder detection/monitoring, energy management, vehicle/fleet tracking/management, telematics and vehicle/engine/component/driver monitoring and analytics, local search, navigation systems, presence/context-aware apps, mobile resource management, asset and freight management, wearable tags/sensors, financial/mobile wallet, mobile hospitality/POS systems, supply chain management, family tracking, mobile social and business networking, proximity-based entertainment and leisure, gaming, and intelligent transportation systems.

Mr. Williams has extensive expertise in all aspects of LBS and IoT delivery across the mobile and IoT ecosystems including enabling sensors, network communications, location determination technologies, geofencing design, map data, location data/database management, geospatial platform/Geographical Information Systems, GPS and other chipsets, data management, control system design, remote management/utilization of such control systems, and device, infrastructure and integration provider integration and management. Mr. Williams has developed and implemented industry-leading product and technology solutions for numerous LBS and IoT applications and markets and provides consulting and research services to some of the leading carriers and enterprises in the U.S., Asia, and Europe. His client list includes Apple, AT&T, BJ's Wholesale Club, Draft Kings, Ecobee, Ericsson, FedEx, GE, Geotab, Green Mountain Grill, Google, Heil, the Houston Police Department, HP/Aruba, the L.A. County District Attorney's Office (both prosecution and public defender), Lyft, Macropoint, Motorola, Nextel, NAVTEQ, Overhead Door, Peschke, Prova, Qualcomm, Samsung, Snap, Sprint, Target, Toyota, Twilio, Verizon Wireless, VIVINT, Volkswagen, Zillow, and ZIM.

Mr. Williams has successfully served as an expert for plaintiffs, prosecutors and defendants in patent, ITC, and criminal litigation (including assisting State Public Defender entities including California, Florida, Maryland, New York, and Tennessee), as well as both sides of civil trade secrets, product liability, fraud, and other litigation. He has been deposed 35 times

and has testified 11 times, including successfully in The Eastern District Court of Texas (winning both infringement and invalidity matters), and in winning in ITC Court. In total he has provided expertise in matters involving over 225 patents and over 50 criminal and civil matters. His credentials in wireless/mobile/IT technologies and associated applications, infrastructure, systems, and enablers are established to the 1980s.

Mr. Williams is expert in smart location technology issues in the Internet of Things (IoT), telematics, and connected/driverless car fields, particularly in their utilization of sensor, location and context information through the practical envisioning and design of: consumer/enterprise use matters and associated application and user interface design; sensor design and deployment strategies; process (re)engineering; IT integration; data aggregation, segmentation, analysis, and management; scalability; and security and privacy issues, requirements, collaboration structures, and ongoing management. He is expert on Big Data, data mining/analytics, and emerging Artificial Intelligence issues associated with location, context and IoT data, as well as its potential usage in the criminal forensics field.

With nearly forty (40) years in location, networking/communications, control, and information technology solutions design, selection, implementation and ongoing management, Mr. Williams has extensive experience in the activities and issues needed to get applications to market, including planning and design at the application, system, interface/integration, network, IT, operational and customer facing levels. He has been published and quoted by leading magazines and newspapers about mobile services, including The New York Times, CBS News.com, The Columbus (Ohio) Dispatch, The Boston Globe, Computerworld, Directions Mag, Mission Critical Communications, Popular Mechanics, and RFID Journal. Mr. Williams has authored five books on wireless location, including *The Definitive Guide to IoT Sensors (In Development), The Definitive Guide to GPS, RFID, Wi-Fi, and Other Wireless Location-Based Services (two versions, third in development)*, *The Definitive Guide to Wireless E911*, and (co-authored) *The Definitive Guide to Mobile Positioning and Location Management*. Mr. Williams has authored dozens of research reports, and tracks and analyzes leading companies in the LBS, IoT, and public safety industries particularly with respect to their product and technology strategies, competitive capabilities and implementation issues. He is expert on all public policy and technology issues related to emergency services/public safety, location data privacy and security, and LBS and IoT privacy protection policies, systems, and support infrastructure. He opines on location privacy issues in various forums. He is the sole or named inventor on nine (9) patents involving mobile location and context, sensors, IoT, and various other technologies and associated methods, with 10 pending.

Employment History

From: 2002 **E911-LBS Consulting; E911-LBS Forensics Engineering (2015+)**
To: Present
Position: *President and Founder*
Provides services across the entire wireless value chain, particularly with respect to technology and business strategic planning and product design, development, implementation, and ongoing management and operations, plus specialized services such IP/Patent litigation associated with Location Based Services and applications, GPS, E911, IoT,

RTLS, RFID, Wi-Fi, NFC, BLE/Bluetooth, beacons, & other location technologies and associated ecosystems. Projects include:

- Provided expert witness, technical consulting, and research analysis services with respect to location-based services-related intellectual property/patent protection, licensing, and litigation (details in separate litigation support section).

- Provide forensics expertise in examination of mobile location-related events and associated data for civil and criminal matters (both prosecutor/plaintiff and defense entities).

- Developed, implemented, managed, and marketed a portfolio of LBS applications and broader offers for leading North American wireless carrier. Responsible for all dimensions of product lifecycle and associated budgets. Work included the development and launch of several LBS applications including mobile social networking, family tracking, local search, 411 w/ location, and mobile worker, fleet, and asset management. Location technologies utilized include GPS, Wi-Fi positioning, RFID, Bluetooth, Cell ID (CID), ECID, and TDOA. Worked extensively with network engineering to troubleshoot/refine new location-determination infrastructure to address/improve location accuracy, privacy and security issues.

- Conducted geofencing accuracy compliance analysis for ride-sharing company auditing their driver airport compliance record. Involved extensive use of JSON/GeoJSON records.

- Conducted comprehensive technical and intellectual property analysis of Real-Time Location Systems (e.g. RFID, Wi-Fi Positioning, Bluetooth, Infrared/Ultrasound, Others) market for European client looking to assert location-related patents.

- Provided technical guidance for mobile payments/wallet startup utilizing RFID, NFC and other technologies as key location enablers. Identified key issues and redeveloped successful patent application after initial USPTO rejection.

- Conducted technical and intellectual property analysis for Fleet Management/Telematics operator and service provider assessing potential infringement candidates.

- Conducted market research and developed market research on Telematics industry, both overall as well as tailored for specific auto manufacturers.

- Conducted analysis of location aggregation market for client interested in acquisition in that industry space.

- Ghost-wrote comprehensive study on Traffic data collection, processing, and reporting technologies, markets, and associated companies on behalf of ABI Research.

- Provided E911 consulting expertise in support of new spectrum regulatory approval and technical implementation issues for startup carrier.

- Managed the design, collection, and analysis of E911 infrastructure deployment of western region of major wireless carrier. Data collected focused on technical issues associated with TDOA (Time Difference of Arrival) technology implementation, and collection and reporting of location accuracy data for FCC reporting purposes.

- Developed the site map and primary content for the NAVTEQ (now HERE) Network for Developers (N4D) LBS web ecosystem – http://developer.navteq.com. Responsible for designing and managing the site map and overall content, identifying key contributors and materials, and utilizing a variety of fragmented information to develop broad and deep technical, digital media and business content to assist various expertise levels of application developers and business management to become intimately familiar with map data, GIS platforms, and LBS applications and underlying technologies and to provide the information and guidance to successfully develop and launch their LBS applications.

- Managed the development of the Nextel (now Sprint/T-Mobile) Location-Based Services strategy. Efforts included market and technical analysis of likely LBS offerings and integrating those findings with Nextel's broader wireless voice and data strategies. Work included prioritizing applications based on focus group findings, business matter attractiveness, ease of implementation, impact on network infrastructure, and synchronization and integration with GPS terminal and E911 mandate rollout plans. Managed network engineering and consulting team to design network modifications to best support the additional demands of LBS applications and underlying bandwidth-consuming digital media content. Product strategy including researching and incorporating context-aware/presence concepts into product/device and network engineering plans.

- Developed navigation platform strategy for major international

auto manufacturer. Assessed direction and technology requirements of in-car and portable navigation device (PND) technologies; developed strategy for in-car navigation platform.

- Developed numerous LBS company research reports using proprietary multi-point "report card" addressing numerous business and technology strategy dimensions and issues.

- Authored multiple books on wireless location, including *The Definitive Guide to IoT Sensors and IoT Use Cases (In Development), The Definitive Guide to GPS, RFID, Wi-Fi, and Other Wireless Location-Based Services (2005/2009 versions, new version in development)*, *The Definitive Guide to Wireless E911*, and (co-authored) *The Definitive Guide to Mobile Positioning and Location Management*.

- Advised numerous small companies and startups such as i360Hygiene, LOCAID, Finder Technologies, Orion GPS, and XYVerify on LBS-related issues to enhance value propositions on business, product and technology dimensions to enhance attractiveness to potential investors/acquisition candidates.

From: 2009 **AT&T Mobility**
To: 2010
Position: *Senior Product Manager – Enterprise LBS*
Led the development, implementation, and marketing of numerous enterprise location-based services across all sales, marketing and operational channels. Work included responsibility for all dimensions of product lifecycle and associated budgets. Products managed included telematics, fleet/vehicle management, asset/freight management, and mobile resource management GPS/LBS apps on a variety of platforms such as Telenav. Played key role in design of company-wide location services product and implementation roadmap.

From: 2007 **AT&T Mobility**
To: 2009
Position: *Consumer LBS Product Realization Manager (Consultant)*
Responsible for the design, development, implementation, and ongoing lifecycle management of several high-profile Consumer LBS applications and associated operational support. Overall application design and implementation responsibilities included AT&T FamilyMap, Loopt Mobile Social Networking, 411 with location, Slifter Local Search, and CaddyHawk Game systems. Work included design, troubleshooting, and implementation of AT&T location-related network, application, user interface, digital media and content delivery, and privacy infrastructure and associated issues such as accuracy and privacy (efforts resulted in patent co-invention).

From: 1993 **Accenture**
To: 2002

Position: *Associate Partner - Communications & High-Technology Strategy; Information & Technology Strategy practices*
Responsible for development of wireless location practice. Led development of business, technology, and product strategies for numerous communications and technology-centric companies looking to enter new markets. Specialized in new product design, development, and implementation, as well as network infrastructure design need to support next generation, high bandwidth-consuming digital media content and associated infrastructure. Efforts included assisting AT&T (re)enter local service, (then) Bell Atlantic launch long distance services, (then) GTE design and implement Intelligent Network and High Value Network services, Nextel (later part of Sprint, and now T-Mobile) develop their location-based services product strategy and enabling network and IT architectures, and Omnipoint (later part of T-Mobile) network integration strategy, as well as leading the design and implementation of voice and data communications networks and associated data management capabilities in numerous industries including communications, computer, transportation, hospitality/retail, energy, agriculture, and banking/financial services. Worked with utilities such as Ameren, Georgia Power, and Duke Energy to identify strategic opportunities utilizing technology and communications in utility-associated infrastructure and other capabilities.

From: 1991 **Booz Allen & Hamilton**
To: 1993

Position: *Senior Associate – Information Technology Practice*
Provided and led consulting services for communications industry and other Information Technology-intensive companies in developing technology strategies for addressing new marketing opportunities and internal operational issues.

From: 1987 **Deloitte Consulting (Originally Touche Ross)**
To: 1991

Position: *Senior Manager*
Provided consulting services for technology-intensive companies in developing business and product strategies for addressing new marketing opportunities and internal operational issues.

From: 1983 **Hughes Aircraft Company**
To: 1985

Position: *Electrical Engineer – Radar Development*
Microcomputer and digital system design engineer on the F-15 fighter radar system as part of analog to digital platform conversion and associated tracking and control systems design. System involved

designing multi-microprocessor-based system to interface to/with wide array of on-board, ground control, and other in-flight communications/control sensors/sensor arrays and systems.

Litigation Support Experience

Date: 2023 **Baker Botts**
Matter: Tile
Project Providing expert consulting, support, analysis, and declarations for IPR matter for patent involving systems and methods for finding lost or stolen property. Deposition.

Date: 2023 **Buchanan**
Matter: Google
Project: Providing expert consulting, support, and declarations for 6 patents/4 groups involving indoor/outdoor location, signal strengths, rf fingerprinting and grid point analysis; use of network calibration data in location determination; and incorporating path loss with calibration, fingerprinting, and location determination/

Date: 2023 **Jenner & Block LLP**
Matter: Uber
Project: Providing expert consulting, support, and declarations for matter involving Taxi/ride sharing systems and methods.

Date: 2022-2023 **Vorys**
Matter: BJ's Wholesale Club
Project: Providing expert consulting, support, and declarations for matters involving location-related in-store ordering, fulfillment, and customer service aspects of e-commerce and m-commerce services. Deposition.

Date: 2023 **Wilson Sonsini**
Matter: Rocateq
Project Provided expert consulting, support, and declaration work involving connected shopping cart technology and applications IP.

Date: 2023 **Finnegan, Henderson, Farabow, Garrett & Dunner, LLP**
Matter: Google
Project: Providing expert consulting, support, and declarations for IPR matters directions, video, wearables/spatial orientation detection.

Date: 2022-2023 **Kilpatrick Townsend & Stockton LLP**
Matter: Apple
Project: Provide expert consulting, support, and reports for IPRs, invalidity and non-infringement proceedings involving eight (8) patents involving sharing of location information between multiple devices

for a variety of use cases. Six IPRs instituted and in process. Depositions (2 covering 6 IPRs).

Date: 2022-2023 **Venable LLP**
Matter: Verizon Wireless dba Cellco Partnership
Project: Provide expert consulting, support, and declaration for IPR matters involving georeferencing and specialty messaging techniques.

Date: 2022-2023 **Hall Griffin**
Matter: Ben's Asphalt
Project: Provided technical expertise in assessing technical aspects of telematics breach-of-contract lawsuit. Successfully settled.

Date: 2022-2023 **Wolf, Greenfield & Sacks, P.C.**
Matter: Snap
Project: Providing expert consulting, support, and report for IPR matter involving social-based location, mapping, matching, and display technologies. Deposition.

Date: 2022-2023 **Dreifuss Bonacci & Parker**
Matter: Pacific Controls Inc.
Project: Providing expert consulting, report, and testimony in regards to contractual dispute between Telematics Service Provider and equipment manufacturer. Deposition and Testimony (SDNY).

Date: 2021-2022 **Greenberg Trauig**
Matter: HP Enterprises, Aruba
Project: Providing expert consulting, report, and testimony in support of non-infringement and invalidity analysis in EDTX matter involving beacons/beaconing technologies, methods, and associated systems. Depositions (2).

Date: 2021-2023 **Keker, Van Nest & Peters LLP**
Matter: Google, Ecobee, and VIVINT (v. Ecofactor) (WDTX)
Project: Provided/ing expert consulting, report, and testimony in support of invalidity analysis involving HVAC remote monitoring and control and associated sensors, systems, and communications capabilities. Deposition and Testimony; VIVINT trial pending.

Date: 2021-2022 **Baker Botts**
Matter: Lyft (multiple matters)
Project: Providing expert consulting, support, and report for matters involving location-related applications technologies including GPS, Bluetooth, Wi-Fi positioning, RFID, and road sensors/readers.

Date: 2022 **Winston & Strawn LLP**
Matter: ZIM Integrated Shipping

Project: Provided expert consulting in EDTX invalidity and non-infringement case involving method and apparatus for shipping information patents.

Date: 2020-2021 **Lowe Graham Jones**
Matter: Green Mountain Grill (IoT Connected Grill) (ITC Court)
Project: Provided expert consulting, report, and testimony in ITC case involving Internet of Things (IoT), remote monitoring and control, cloud services, and various short-range communications technologies. Involves non-infringement, DI, Invalidity, and Inventorship. Deposition and Testimony.

Date: 2021 **Munger, Tolles & Olson LLP**
Matter: Google
Project: Provided expert consulting and support for EDTX matter involving invalidity/non-infringement of smart cards and payment systems and associated capabilities such as Secure Elements.

Date: 2021 **Jackson Walker L.L.P.**
Matter: Prova
Project: Provide expert consulting, support, and report for IPR involving buyer verification/tracking and inventory management/tracking utilizing RFID technology.

Date: 2020-2023 **Latham & Watkins LLP**
Matter: Overhead Door (OHD-Garage Door Manufacturer) (ITC Court)
Project: Provided expert consulting, report, and testimony in ITC case involving Internet of Things (IoT), remote monitoring and control, and various short-range communications technologies. Deposition and Testimony in ITC court. Support in Customs and Enforcement.

Date: 2020-2021 **Ropes & Gray LLP**
Matter: Target
Project: Providing expert consulting, support, and report for IPRs for several patents involving short-range communications technologies and associated identification and location determination methods and techniques including Bluetooth, RFID, and Wi-Fi. Depositions seven (7) involving nine (9) patents.

Date: 2020-2022 **Baker Botts**
Matter: Draft Kings
Project: Providing expert consulting, support, and report for IPRs for several patents involving validating gaming customers location in appropriate online gaming jurisdictions/geofencing. Depositions (2)

Date: 2020 **Baker Botts**
Matter: Lyft

Project: Provided expert consulting, support, and report for IPRs involving Intelligent Transportation systems, geofences, and location technologies including GPS, Bluetooth, Wi-Fi positioning, RFID, and road sensors/readers. Deposition.

Date: 2020-2023 **Finnegan & Henderson**
Matter: Google (3)
Project: Providing expert consulting, support, and report for IPRs involving user experience sharing, software registration, and device/user tracking involving a variety of location technologies.

Date: 2019-2023 **Lynch Thompson LLP**
Matter: Heil
Project: Providing technical/engineering expertise in trade secrets matter involving Internet of Things, RFID, Telematics, Vehicle Sensors, & Big Data for waste vehicle manufacturer. Deposition.

Date: 2018-2020 **Lawgivers (Trinidad and Tobago)**
Matter: A&V Oil and Gas
Project: Provided expert support, report, and testimony in arbitration matter involving government of T&T. Focused on (in)accuracies of GPS-based vehicle tracking system relative to a variety of key events. Testimony at trial.

Date: 2019-2020 **Perkins Coie**
Matter: Zillow
Project: Provided expert support, report, and deposition for non-Infringement matter for major real estate services firm and associated subsidiaries involving a wide array of location determination technologies on smartphones.

Date: 2019-2020 **Baker Botts**
Matter: Lyft
Project: Provided expert support, report, and deposition is support of Claim Construction brief associated with non-infringement matter.

Date: 2016-2021 **Sterne Kessler Goldstein Fox**
Matters: Google (Multiple matters); Google (Nest, Multiple matters)
Projects: Providing expert support, reports, and deposition for several IPRs of location/context-related patents on behalf of leading Internet services company utilizing a wide variety of communications and location technologies.

Date: 2013, 2019/2020 **XYVerify (3)**
Patent Re-Submission and Approval; Patent Application Creation
Projects: (Re)wrote patent applications for LBS/financial verification system using multiple location determination methods including RFID,

Bluetooth, WPS, and GPS. Efforts enabled patents to be approved after initial rejection by USPTO.

Date: 2013-2023 **Civil and Criminal Forensics**
Matters: Various
Project: Provided/Providing cellphone, vehicle/telematics, specialty device, and computer-based location forensics expertise in over 50 criminal and civil matters involving numerous location determination technologies and associated applications and systems. Criminal matters include homicide, attempted murder, assault (multiple types), arson (building and land), armed robbery, breaking and entering, assault (various types), and property crime. Civil matters include trade secrets, product liability, accident liability, fraud, contract disputes, and employment matters.

Applications/Platforms for criminal and civil forensics analysis include cellular records, 911 records, Facebook/Instagram/ Messenger/social media apps, Google/search, Google tracking apps (e.g. Timeline, others), vehicle tracking systems, specialty GPS (e.g. GPS ankle bracelets, specialty devices) surveillance and safety systems, smart home systems, aviation, vehicle infotainment systems, and connected cars, Expert/knowledgeable in numerous forensic technologies, tools, and accident/incident reconstruction methods including CDR, NELOS, PCMD, RTT, EVDO, Cellebrite, Paraben, Google Earth/Timeline, and Hawk Analytics/CellHawk, as well as specialized knowledge on iOS and Android smartphone location determination techniques and data collection, analysis, and management of all types including KML/KMZ, (Geo)JSON, CSV, (E)WKT/WKB, Shapefile, ESRI, and other GIS vector/raster systems, technologies, formats, and models.

Date: 2019 **Sterne Kessler Goldstein Fox**
Matter: Volkswagen
Project: Provided expert support for IPR involving Location-Based Messaging in automotive related use matter/environments.

Date: 2017-2018 **Finnegan & Henderson**
Matter: Fed Ex
Project: Provided expert support, consulting, reports, deposition, and trial testifying for infringement and district court invalidity proceedings on behalf of leading transportation/shipping company in The Eastern District Court of Texas. Deposition and Testimony.

Date: 2017-2018 **Polsinelli**
Matter: Uber
Project: Provided expert support and reports for Trade Secrets matter involving major shared transportation provider.

Date: 2017-2018 **Renner Otto**
Matters: Macropoint; Timekeeping Systems Inc.
Projects: Providing consulting, expert services, report and deposition in invalidity matters for transportation and employee tracking patents.

Date: 2016-2018 **Paul Hastings**
Matters: Samsung (2 matters)
Project: Provided expert services for Inter Partes Review (IPR) of multiple location, safety, and security patents on behalf of major telecommunications equipment and services provider.

Date: 2016-2017 **European Firm**
Matter: Patent Infringement/Claim Chart Analysis
Project: Provided consulting, market analysis, and claim chart development for patent holder involving RTLS-related repeater technologies, particularly using WPAN/Zigbee networks.

Date: 2016-2017 **Baker Botts**
Matter: Twilio
Project: Provided location/E911-related expert services, report, and deposition for IPR of mobile registration patent on behalf of Voice & Video, Messaging, and Authentication APIs provider.

Date: 2016 **Los Angeles District Attorney's Office**
Matter: People v. Dawud Abdulwali
Project: Provided expert services on location technologies used to identify and trace accused arsonist on behalf of L.A. District Attorney's (Prosecutors) office.

Date: 2016-2017 **Fitzpatrick, Cella, Harper & Scinto**
Matter: Geotab
Project: Providing expert support, reports, and deposition for infringement defense of multiple asserted patents on behalf of fleet management/telematics provider in EDTX.

Date: 2015-2016 **The Ogg Law Firm PLLC**
Matter: City of Houston Police Department
Project: Provided expert services/testimony regarding veracity of Automatic Vehicle Locator (AVL) systems in officer suspension matter.

Date: 2015-2016 **Sterne Kessler Goldstein Fox**
Matter: VIVINT
Project: Providing expert support, reports, and deposition for IPR involving several location-related patents for home security/energy company.

Date: 2015 **Hogan Lovells**
Matter: Apple

Project: Provided expert support for multiple location-related patent Inter Partes Review (IPR) and infringement proceedings for leading mobile platform, application and services provider.

Date: 2015 **Thompson Hine LLP**
Matters: Macropoint
Project: Provided expert support for patent litigation efforts involving fleet management devices, software, and services.

Date: 2013-2014 **Williams & Connolly**
Matter: State of Maryland
Project: Provided expert services in assessing validity of GPS tracking bracelet/system in parole violation matter.

Date: 2013-2014 **Cravath, Swaine & Moore**
Matter: Qualcomm
Project: Provided expert litigation support, technical consulting, and advisory services in Anti-Trust matter regarding location services technologies, platforms, and standards.

Date: 2014 **Patterson Thuente Pedersen, P.A.**
Matter: Kaspersky Internet Security
Project: Provided expert litigation support and technical consulting in patent countersuit involving internet security services.

Date: 2014 **Sullivan & Cromwell LLP, others**
Matter: Peschke
Project: Provided expert support and technical consulting in location services infringement patent dispute involving interactive mapping applications. Effort included providing deposition testimony.

Date: 2012-2013 **Covington & Burling**
Matter: Samsung (ITC Court)
Project: Provided expert litigation support and technical consulting and advisory services in International Trade Commission matter.

Date: 2011-2013 **Connolly Bove Lodge & Hutz**
Matter: Enovsys
Project: Provided expert litigation support and technical consulting and advisory services for pursuit of LBS patent royalties and infringement settlements.

Date: 2011-2013 **Voxson**
Matters: Various
Project: Provided expert litigation support and technical consulting and advisory services for pursuit of E911 and LBS patent infringement royalties and settlements.

Date: 2010-2012 **Morrison & Foerster LLP**
Matter: Cellco Partnership (dba Verizon Wireless)
Project: Provided expert advisory and report services in support of IPR re-examination process of E911 and LBS patents.

Date: 2011-2012 **Dovel & Luner**
Matter: TrackBeam
Project: Provided market/technical consulting, expertise and research analysis of LBS patents to identify potential licensing candidates.

Date: 2011 **SNR Denton**
Matter: Wavemarket
Project: Provided market and technical consulting and advisory services for defense of LBS patent lawsuits.

Date: 2010 **State of New Jersey**
Project: Provided wireless location consulting expertise in development of economic growth strategy for State of New Jersey.

Date: 2007-2008 **General Electric**
Project: Provided consulting research and guidance on LBS and E911 technology, GE-owned patents, prior artwork, technology direction.

Education

Year	College/University	Degree
1987	The University of Texas at Austin (1st in graduating class)	MBA, Information Systems Management
1983	Purdue University, West Lafayette, Indiana (Top honors; Tau Beta Pi, Eta Kappa Nu)	BSEE, Digital System Design emphasis

Patents

- "Method and apparatus for providing mobile social networking privacy." (U.S. Patent Number 8,613,109, issued on December 17, 2013).
- "Systems and methods of using wireless location, context, and/or one or more communication networks for monitoring for, preempting, and/or mitigating pre-identified behavior." (U.S. Patent Number 10,477,342, Issued November 12, 2019).
- "Systems and methods for monitoring for and preempting pre-identified restriction violation-related behavior(s) of persons under restriction." (U.S. Patent Number 10,497,242, Issued December 3, 2019).
- "Systems and methods for providing location-based security and/or privacy for restricting user access." (U.S. Patent Number 10,555,112, Issued February 4, 2020).
- "Systems and methods for developing, monitoring, and enforcing agreements, understandings, and/or contracts." (U.S. Patent Number 10,853,897, Issued 12/1/2020).

- "Systems and methods for monitoring for and preempting pre-identified restriction violation-related behavior(s) of persons under restriction." (U.S. Patent Number 10,861,307, Issued December 8, 2020).
- "Systems and methods for monitoring for and lowering the risk of addiction-related or restriction violation-related behavior(s)." (U.S. Patent Number 11,388,546, Issued July 12, 2022).
- "Systems and methods for monitoring for and preempting the risk of a future occurrence of a quarantine violation." (U.S. Patent Number 11,412,353, Issued August 9, 2022).
- "Dynamic and adaptive systems and methods for rewarding and/or disincentivizing behaviors" (U.S. Patent Number 11,636,941, Issued April 25, 2023).
- Numerous other patents pending.

Publications

Books:

1. The Definitive Guide to IoT Sensors (In development)
2. The Definitive Guide to IoT Use Cases (In development)
3. The Practical Guide to The Internet of Things (IoT): Use Matters and Enabling Technologies (In development)
4. The Definitive Guide to GPS, RFID, Wi-Fi, and Other Wireless Location-Based Services (2 versions, plus version in development)
5. The Definitive Guide to Wireless E911
6. The Definitive Guide to Mobile Positioning and Location Management (Co-authored)

Articles/Quotations:

1. Medium.com (Predict). January 31, 2023. "ChatGPT and Its Impact on Criminal Forensics (and Criminals)"
2. Medium.com. October 3, 2022. "What if GPS Fails?"
3. Location Data Privacy posts/blog. Ongoing at www.E911-LBS.com.
4. Linked In. March 3, 2020. "Facial Recognition: Good, Bad, or Ugly?"
5. The Columbus Dispatch. February 17, 2017. "Experts: GPS monitors couldn't save OSU student's life"
6. E911-LBS.com. May 2012. "The Pacifier Generation – How Wireless is Impacting Our Society"
7. Nbizmag.com. Summer 2008. "How Will the Convergence of LBS Technologies Affect Business?"
8. Directions Magazine. November 30, 2005. "The Deadline for the E911 Mandate Approaches…Where Do Things Stand?"
9. Computerworld. May 23, 2005. "Beyond The Supply Chain: The Impact of RFID on Business Operations and IT Infrastructure"
10. RFID Journal. June 12, 2005. "IT's Impact on RFID"
11. Directions Magazine. July 29, 2004. "The Strategic Implications of the Wal-Mart RFID Mandate"
12. Directions Magazine. February 25, 2004. "RFID-Hot Technology with Wide-Ranging Applications"
13. WirelessDevNet.com. 1/30/2003. "It's The (Location-Based) Applications – Stupid!"

Languages/Tools

- C/C++, Java, Basic, Cobol, Fortran, Pascal, APL, Assembly, Python, Others
- CDR, NELOS, PCMD, RTT, EVDO, Cellebrite, Paraben, Google Earth/Timeline, Hawk Analytics/CellHawk, as well as specialized knowledge on iOS and Android smartphone location determination techniques.
- Data collection, analysis, and management of all types including KML/KMZ, (Geo)JSON, CSV, (E)WKT/WKB, Binary, Shapefile, ESRI, and other GIS vector/raster systems, technologies, formats, and models.

Associations and Achievements

- IEEE, NENA, APCO. Certified in Emergency Management Response (CERT)