K&L GATES

March 30, 2023

James A. Shimota
Partner
Jim.Shimota@klgates.com

T +1 312 807 4299
F +1 312 827 8071

Natalie Alfaro Gonzales
BAKER BOTTS L.L.P.
910 Louisiana Street
Houston, TX 77002
(713) 229-1318
natalie.gonzales@bakerbotts.com
Via Email

Re: STA Group LLC v. Motorola Solutions, Inc., 2:22-cv-00381-RSG (E.D. Tex.): Plaintiff's Infringement Contentions

Dear Natalie:

Attached are revised initial infringement contentions.

Your chief complaint as I've understood it is our articulation of WAVE and P25 systems as accused products, given that both systems also encompass functionality that does not infringe any of the asserted patents. We have carefully considered this concern, and it is our hope that the revised infringement contentions address it to your satisfaction.

As we both know, infringement contentions need to specify accused products. And while Motorola commercializes a range of technologies, some of which are accused and some of which are not, it commercializes them as integrated solutions. Motorola's advertising emphasizes integrated solutions, often characterized as a public safety ecosystem, typically branded WAVE. Its training emphasizes the same characterization:

> The WAVE™ Certified Integration Engineer course provides instruction in designing, integrating, and troubleshooting WAVE™ systems. It also provides the groundwork for a basic understanding of how WAVE™ delivers a Radio-over-IP solution. The training scope covers WAVE™ integration to MOTOTRBO™, ASTRO®, and DIMETRA systems.

Even its legal documents collectively refer to diverse technologies as "WAVE:"

> This Privacy Policy describes the privacy practices for WAVE Mobile Communicator, WAVE PTT Mobile Application, WAVE PTX, WAVE OnCloud, WAVE Push-to-Talk, WAVE PTT Web Dispatch, WAVE Customer Portal, and Kodiak, provided by Motorola Solutions, Inc. (hereinafter collectively referred to as "WAVE"). This Privacy Policy

For that reason, we cannot conclude that it would be accurate to refer to any particular technology encompassed within a system as a "product." However, in these revised claim charts, we have made every attempt based on the information we have to specify the accused "components" of the overall system as precisely as possible, while noting that these components interoperate with other software and hardware components. This specificity has introduced redundancy and made some charts significantly longer, but we assume you will understand our intent. We note, however, that Motorola's branding of technological functionality has shifted significantly over time. We are relying on Motorola's understanding of its discovery obligations to ensure that it does not adopt an inappropriately limited approach to discovery, but provides discovery as to the accused technologies and all other technologies that operate in a similar manner, including the same or substantially similar technologies under a different name.

We have also added detail regarding our infringement theories in an effort to address your concerns in that regard. We have not included citations to evidence in our claim charts, as the rules are clear that infringement contentions are for setting forth theories of infringement, not listing evidence.

We will move to amend our preliminary infringement contentions accordingly as we previously discussed. Please confirm that MSI does not oppose our motion. Also, please let us know if you have any questions.

Sincerely,

/s/ James Shimota
James Shimota

Infringement of U.S. Patent No. 7,324,802 by Motorola ASTRO 25 System

The Motorola ASTRO 25 System infringes at least claims 1 - 5, 7, 9, and 10 of U.S. Patent No. 7,324,802 (the "'802 Patent"). The '802 Patent was filed January 20, 2005, issued January 29, 2008, and is entitled "Method and System for Managing Communication in Emergency Communication System."

#	U.S. Patent No. 7,324,802	Motorola ASTRO 25 System
1a	A method of managing communication in a communication system, the communication system receiving messages from a plurality of channels, the method comprising:	The Motorola ASTRO 25 System performs the claimed method utilizing the ASTRO 25 Advanced Messaging Solution with Smart Client, and functionality that operates in a similar manner, on data-enabled two-way radios such as APX P25 two-way radios, which function interoperably with other hardware and software components such as ASTRO infrastructure including ASTRO cores and other hardware infrastructure, ASTRO software, PremierOne servers, Kodiak, CommandCentral, and Wave Dispatch to receive data ("ASTRO 25 System").

		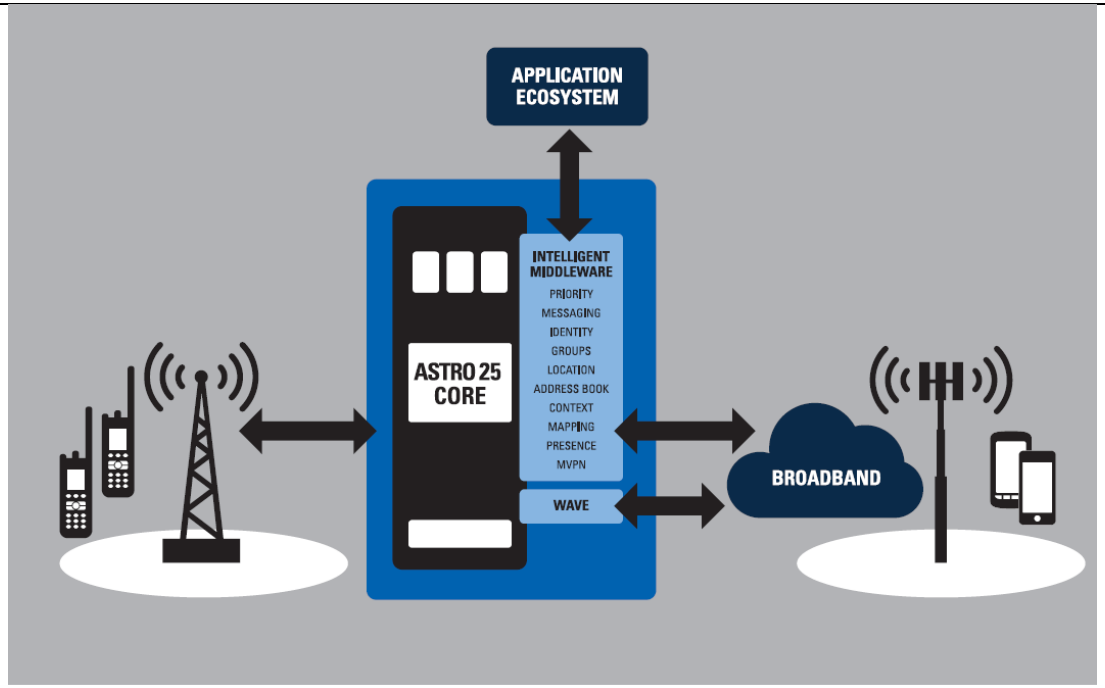 **BROCHURE** | ASTRO 25 SYSTEM AT-A-GLANCE 5 The ASTRO 25 System performs a method of managing communication in a communication system, the communication system receiving messages from a plurality of channels. Specifically, Smart Client users are organized into logical groups for communication purposes, such as virtual talk groups associated with entities such as groups of personnel, localities, or units. Communicators use these pre-defined groups as channels.
1b	receiving a first message on a first dedicated channel from amongst the plurality of channels at the communication system, the	Data-enabled radios receive a first message on a first dedicated channel from amongst the plurality of channels in the communication system, the plurality of channels being dedicated to different entities, the first dedicated channel being dedicated to receiving messages from a first entity.

	plurality of channels being dedicated to different entities, the first dedicated channel being dedicated to receiving messages from a first entity;	For example, a data-enabled radio receives messages on a plurality of channels. Some channels are used substantially exclusively by single entities during a given period of time as described above. The radio receives messages on such channels from individuals associated with such entities or who intend to communicate to others associated with that entity. Specifically, a radio receives a first message on a first such channel. Discovery will provide detailed information regarding implementation and identification of the specific components, source code, software and/or other instrumentalities used to carry out the claimed method. Publicly available documentation makes it evident that the Defendants and/or their customers are performing the method in the manner set forth in the asserted claims. As additional information is obtained through discovery related to the Accused Products and related instrumentalities, STA Group will supplement these contentions.
1c	receiving a second message on a second dedicated channel being dedicated to receiving messages from a second entity from amongst the plurality of channels at the communication system, the second message overlapping with the first message in time;	Data-enabled radios receive a second message on a second dedicated channel being dedicated to receiving messages from a second entity from amongst the plurality of channels at the communication system, the second message overlapping with the first message in time. For example, a data-enabled two-way radio receives a second message on a second such channel used substantially exclusively by individuals associated with a single entity or communicating to others associated with that entity during a given period of time. The second message is received during a period of time that at least partially overlaps with the period of time during which the first message was received. Discovery will provide detailed information regarding implementation and identification of the specific components, source code, software and/or other

		instrumentalities used to carry out the claimed method. Publicly available documentation makes it evident that the Defendants and/or their customers are performing the method in the manner set forth in the asserted claims. As additional information is obtained through discovery related to the Accused Products and related instrumentalities, STA Group will supplement these contentions.
1d	determining one or more priorities for the first message received on the first dedicated channel from the first entity and the second message received on the second dedicated channel from the second entity based on at least one pre-defined parameter;	The ASTRO 25 System determines one or more priorities for the first message received on the first dedicated channel from the first entity and the second message received on the second dedicated channel from the second entity based on at least one pre-defined parameter. For example, the ASTRO 25 System assigns relative priorities to the above-described messages based on the comparison of one or more parameters, e.g., priority level designation by a communicator, characteristics of the message, characteristics of the entity, etc. These parameters are defined before receipt of the messages. Discovery will provide detailed information regarding implementation and identification of the specific components, source code, software and/or other instrumentalities used to carry out the claimed method. Publicly available documentation makes it evident that the Defendants and/or their customers are performing the method in the manner set forth in the asserted claims. As additional information is obtained through discovery related to the Accused Products and related instrumentalities, STA Group will supplement these contentions.
1e	determining which message out of the first message and the second message should be stored and subsequently played	The ASTRO 25 System determines which message out of the first message and the second message should be stored and subsequently played based on the second message overlapping with the first message in time and one or more priorities assigned to the first and the second message.

	based on the second message overlapping with the first message in time and one or more priorities assigned to the first and the second message;	For example, the ASTRO 25 System automatically determines which of the above-described messages should be stored based on the priority determination described above. Discovery will provide detailed information regarding implementation and identification of the specific components, source code, software and/or other instrumentalities used to carry out the claimed method. Publicly available documentation makes it evident that the Defendants and/or their customers are performing the method in the manner set forth in the asserted claims. As additional information is obtained through discovery related to the Accused Products and related instrumentalities, STA Group will supplement these contentions.
1f	playing the message having a higher priority between the first and the second message;	The data-enabled two-way radio plays the message having a higher priority between the first and the second message. For example, the ASTRO 25 System conveys to the end user via the data-enabled radio the message having a higher priority between the first and the second message so that the message with higher priority is delivered before the message having lower priority. Discovery will provide detailed information regarding implementation and identification of the specific components, source code, software and/or other instrumentalities used to carry out the claimed method. Publicly available documentation makes it evident that the Defendants and/or their customers are performing the method in the manner set forth in the asserted claims. As additional information is obtained through discovery related to the Accused Products and related instrumentalities, STA Group will supplement these contentions.

1g	storing at least one message having a lower priority between the first and the second message based on the determination; and	The ASTRO 25 System stores at least one message having a lower priority between the first and the second message based on the determination. For example, the ASTRO 25 System stores at least one message having a lower priority between the first and the second message based on the determination described above, for example, by listing the messages in order of priority in the queue. Discovery will provide detailed information regarding implementation and identification of the specific components, source code, software and/or other instrumentalities used to carry out the claimed method. Publicly available documentation makes it evident that the Defendants and/or their customers are performing the method in the manner set forth in the asserted claims. As additional information is obtained through discovery related to the Accused Products and related instrumentalities, STA Group will supplement these contentions.
1h	playing the stored message subsequent to completing playing of the message having higher priority.	The ASTRO 25 System plays the stored message subsequent to completing playing of the message having higher priority. For example, the data-enabled two-way radio conveys the stored message subsequent to completing conveying of the message having higher priority. Discovery will provide detailed information regarding implementation and identification of the specific components, source code, software and/or other instrumentalities used to carry out the claimed method. Publicly available documentation makes it evident that the Defendants and/or their customers are performing the method in the manner set forth in the asserted claims. As additional information is obtained through discovery related to the Accused

		Products and related instrumentalities, STA Group will supplement these contentions.
2a	2. The method of claim 1, wherein determining which message out of the first message and the second message should be stored and subsequently played comprises:	The ASTRO 25 System automatically determines which message out of the first message and the second message should be stored and subsequently played. *See* 1e.
2b	calculating the priorities of the received messages; and	The ASTRO 25 System calculates the priorities of the received messages. For example, the ASTRO 25 System calculates the priority of a message based on a variety of criteria, including characteristics of a message or an entity or the designation by a communicator, as described above. Discovery will provide detailed information regarding implementation and identification of the specific components, source code, software and/or other instrumentalities used to carry out the claimed method. Publicly available documentation makes it evident that the Defendants and/or their customers are performing the method in the manner set forth in the asserted claims. As additional information is obtained through discovery related to the Accused Products and related instrumentalities, STA Group will supplement these contentions.
2c	comparing the priorities of the received messages.	The ASTRO 25 System automatically compares the priorities of the received messages. For example, the ASTRO 25 System automatically compares the priority of the messages to determine which message to display first or list first in the queue.

		Discovery will provide detailed information regarding implementation and identification of the specific components, source code, software and/or other instrumentalities used to carry out the claimed method. Publicly available documentation makes it evident that the Defendants and/or their customers are performing the method in the manner set forth in the asserted claims. As additional information is obtained through discovery related to the Accused Products and related instrumentalities, STA Group will supplement these contentions.
3	3. The method of claim 1, wherein the predefined parameter comprises a bandwidth requirement of the received messages.	The predefined parameter comprises a bandwidth requirement of the received messages. For example, the messages can include a bandwidth requirement. This can be used, for example, to calculate resource requirements and optimize the system resources. Discovery will provide detailed information regarding implementation and identification of the specific components, source code, software and/or other instrumentalities used to carry out the claimed method. Publicly available documentation makes it evident that the Defendants and/or their customers are performing the method in the manner set forth in the asserted claims. As additional information is obtained through discovery related to the Accused Products and related instrumentalities, STA Group will supplement these contentions.
4	4. The method of claim 1, wherein the predefined parameter comprises a type of the received messages.	The predefined parameter comprises a type of the received messages.

		For example, the messages can include a type of the message. Examples of these message types include, but are not limited to, a normal message, a BOLO notification, an Amber Alert notification, and a Severe Weather notification. Discovery will provide detailed information regarding implementation and identification of the specific components, source code, software and/or other instrumentalities used to carry out the claimed method. Publicly available documentation makes it evident that the Defendants and/or their customers are performing the method in the manner set forth in the asserted claims. As additional information is obtained through discovery related to the Accused Products and related instrumentalities, STA Group will supplement these contentions.
5	5. The method of claim 4, wherein the type of received messages being one of a group comprising audio, video, text, and image.	The type of received messages being one of a group comprising audio, video, text, and image. For example, the messages include at least text messages. Discovery will provide detailed information regarding implementation and identification of the specific components, source code, software and/or other instrumentalities used to carry out the claimed method. Publicly available documentation makes it evident that the Defendants and/or their customers are performing the method in the manner set forth in the asserted claims. As additional information is obtained through discovery related to the Accused Products and related instrumentalities, STA Group will supplement these contentions.
7	7. The method of claim 1, further comprising informing an operator	The ASTRO 25 System informs an operator the time of receipt of a message while playing the first message and the second message.

	the time of receipt of a message while playing the first message and the second message.	For example, the display of the message by the ASTRO 25 System includes a time of receipt of a message. Discovery will provide detailed information regarding implementation and identification of the specific components, source code, software and/or other instrumentalities used to carry out the claimed method. Publicly available documentation makes it evident that the Defendants and/or their customers are performing the method in the manner set forth in the asserted claims. As additional information is obtained through discovery related to the Accused Products and related instrumentalities, STA Group will supplement these contentions.
9	9. The method of claim 1, wherein a message includes mobile phone communications.	A message includes mobile phone communications as described. For example, the ASTRO 25 System includes smartphone (e.g. mobile phone) communications. Discovery will provide detailed information regarding implementation and identification of the specific components, source code, software and/or other instrumentalities used to carry out the claimed method. Publicly available documentation makes it evident that the Defendants and/or their customers are performing the method in the manner set forth in the asserted claims. As additional information is obtained through discovery related to the Accused Products and related instrumentalities, STA Group will supplement these contentions.

10	10. The method of claim 1, wherein a message includes radio communications.	A message includes radio communications. For example, the ASTRO 25 System includes data-enabled radio communications. Discovery will provide detailed information regarding implementation and identification of the specific components, source code, software and/or other instrumentalities used to carry out the claimed method. Publicly available documentation makes it evident that the Defendants and/or their customers are performing the method in the manner set forth in the asserted claims. As additional information is obtained through discovery related to the Accused Products and related instrumentalities, STA Group will supplement these contentions.

Infringement of U.S. Patent No. 8,489,134 by Motorola ASTRO System

The Motorola ASTRO System infringes at least claims 1, 2, 7, 8 and 9 of U.S. Patent No. 8,489,134 (the "'134 Patent"). The '134 Patent was filed September 2, 2008, issued July 16, 2013, and is entitled "System and Method for Providing Presence Based Trunking in a Network Environment."

#	U.S. Patent No. 8,489,134	Motorola ASTRO System
1a	1. An apparatus, comprising:	The Motorola ASTRO System is an apparatus that comprises SmartConnect and software and hardware that interoperates with it including the Astro 25 Advanced Messaging Solution, Critical Connect, Dispatch Console, ASTRO® 25 trunked system, LMR Multicast Proxy Server (LMP), routers, broadband cellular sites, radio sites, endpoints such as APX radios (including APX Next and APX N70) mobiles and portables ("the ASTRO System"). The ASTRO system and systems that operate in a similar manner infringe the claims of the '134 Patent as described herein.

EXPANDED COVERAGE VIA SMARTCONNECT

Your P25 radio system is designed for excellent coverage, but there are times when you need to go beyond the boundaries of the network, without losing your vital connection.

SmartConnect will keep you in touch with your team. It automatically and transparently switches your APX radio's voice and data to an available broadband network when not in P25 coverage, and back again when you return to P25 coverage. This effectively extends the usable service area of your radio.

APX radios can use SmartConnect when connected through your in-vehicle modem connected to LTE, Wi-Fi or Satellite. With no user intervention needed, the switchover is fast and seamless with audio even remaining on the same talkgroup.

SmartConnect reroutes both P25 voice and P25 data packets, complete with end-to-end encryption and control signals between the radio and gateway are encrypted using TLS. Emergencies, caller ID, talkgroup IDs, status signaling, and even P25 text messages all function seamlessly.

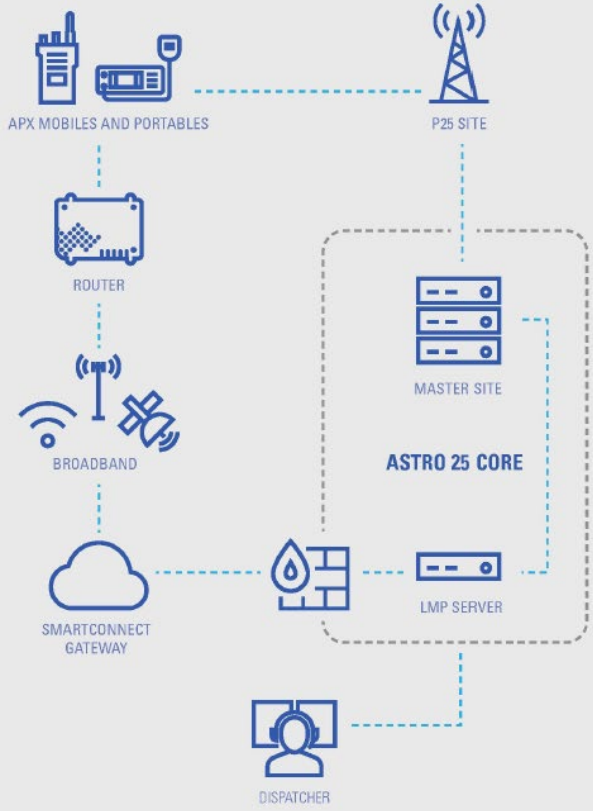

1b	a first communication resource manager located in a first domain and operable to interact with a second communication resource manager located in a second domain, wherein the first communication resource manager is configured to:	The Motorola ASTRO System includes a first communication resource manager such as the Astro Core located in a first domain which is configured to interact with a second communication resource manager located in a second domain. Discovery will provide detailed information regarding implementation and identification of the specific components, source code, software and/or other instrumentalities used to carry out the claimed method. Publicly available documentation makes it evident that the Defendants and/or their customers are performing the method in the manner set forth in the asserted claims. As additional information is obtained through discovery related to Accused Products and related instrumentalities, STA Group will supplement these contentions.
1c	determine to establish a link for multicasting between users in the first domain and users in the second domain based on presence data of at least one user in the first domain and at least one user in the second domain;	The Motorola ASTRO System determines to establish a link for multicasting between users in the first domain and users in the second domain based on presence data of at least one user in the first domain and at least one user in the second domain. For example, the Motorola ASTRO System determines to establish a link capable of accommodating multicast communications between users in the first domain and users in the second domain based on presence data of at least one user in the first domain and at least one user in the second domain. Discovery will provide detailed information regarding implementation and identification of the specific components, source code, software and/or other instrumentalities used to carry out the claimed method. Publicly available documentation makes it evident that the Defendants and/or their customers are performing the method in the manner set forth in the asserted claims. As additional

		information is obtained through discovery related to Accused Products and related instrumentalities, STA Group will supplement these contentions.
1d	determine an application to be used in a communication session over the link;	The Motorola ASTRO System determines an application to be used in a communication session over the link. For example, the Motorola ASTRO System determines an application, such as voice or data, to be used in a communication session over the link in accordance with characteristics of the communication session. Discovery will provide detailed information regarding implementation and identification of the specific components, source code, software and/or other instrumentalities used to carry out the claimed method. Publicly available documentation makes it evident that the Defendants and/or their customers are performing the method in the manner set forth in the asserted claims. As additional information is obtained through discovery related to Accused Products and related instrumentalities, STA Group will supplement these contentions.
1e	allocate a bandwidth level to be used for the link to accommodate the application;	The Motorola ASTRO System allocates a bandwidth level to be used for the link to accommodate the application. For example, the Motorola ASTRO System allocates a bandwidth level to be used for the link to accommodate the application by determining a path for content. Discovery will provide detailed information regarding implementation and identification of the specific components, source code, software and/or other instrumentalities used to carry out the claimed method. Publicly available documentation makes it evident that the Defendants and/or their customers are performing the method in the manner set forth in the asserted claims. As additional information is obtained through discovery related to Accused Products and related instrumentalities, STA Group will supplement these contentions.

1f	increase the bandwidth level for the link based on a change in the application and based on an identification of additional presence data for additional users that have joined the communication session, wherein the communication resource managers each includes respective trunking element that is automatically configured to select a transcoding based on available bandwidth;	The Motorola ASTRO System increases the bandwidth level for the link based on a change in the application and based on an identification of additional presence data for additional users that have joined the communication session, wherein the communication resource managers each includes respective trunking element that is automatically configured to select a transcoding based on available bandwidth . For example, the Motorola ASTRO System automatically increases the bandwidth level for the link based on a change in the application and additional users that have joined the communication session. The transcoding scheme for the communications transmitted over the link can be determined based on a variety of properties of the communication session, including available bandwidth. Discovery will provide detailed information regarding implementation and identification of the specific components, source code, software and/or other instrumentalities used to carry out the claimed method. Publicly available documentation makes it evident that the Defendants and/or their customers are performing the method in the manner set forth in the asserted claims. As additional information is obtained through discovery related to Accused Products and related instrumentalities, STA Group will supplement these contentions.
1g	adjust the bandwidth level based on a determination which of the additional users and the users in the first and second domains can transmit data simultaneously during the communication session;	The Motorola ASTRO System adjusts the bandwidth level based on a determination which of the additional users and the users in the first and second domains can transmit data simultaneously during the communication session. For example, the Motorola ASTRO System adjusts the bandwidth level based on a determination which of the additional users and the users in the first and second domains can transmit data simultaneously during the communication session. Discovery will provide detailed information regarding implementation and identification of the specific components, source code, software and/or other instrumentalities used to carry out the claimed method. Publicly available

		documentation makes it evident that the Defendants and/or their customers are performing the method in the manner set forth in the asserted claims. As additional information is obtained through discovery related to Accused Products and related instrumentalities, STA Group will supplement these contentions.
1h	detect an absence of active users in the first domain and the second domain; and	The Motorola ASTRO System detects when there are no active users in the first domain and the second domain. Discovery will provide detailed information regarding implementation and identification of the specific components, source code, software and/or other instrumentalities used to carry out the claimed method. Publicly available documentation makes it evident that the Defendants and/or their customers are performing the method in the manner set forth in the asserted claims. As additional information is obtained through discovery related to Accused Products and related instrumentalities, STA Group will supplement these contentions.
1i	tear down the link based on the absence; wherein the link is a satellite communication link.	The Motorola ASTRO System tears down the link based on the absence, where the link is a satellite communication link. For example, the Motorola ASTRO System tears down the link based on the absence of users, where the link is a satellite communication link. When users return to radio coverage (e.g. are absent from the domain), the user's radio automatically switches back to the radio network. When the radio stops communicating via the satellite connection, the link is torn down. Discovery will provide detailed information regarding implementation and identification of the specific components, source code, software and/or other instrumentalities used to carry out the claimed method. Publicly available documentation makes it evident that the Defendants and/or their customers are performing the method in the manner set forth in the asserted claims. As additional information is obtained through discovery related to Accused Products and related instrumentalities, STA Group will supplement these contentions.

2	2. The apparatus of claim 1, wherein the users of the first domain comprise a virtual talking group (VTG).	The users of the first domain comprise a virtual talking group (VTG). For example, the Motorola ASTRO System allows users to be grouped in talkgroups (e.g. virtual talking groups). Discovery will provide detailed information regarding implementation and identification of the specific components, source code, software and/or other instrumentalities used to carry out the claimed method. Publicly available documentation makes it evident that the Defendants and/or their customers are performing the method in the manner set forth in the asserted claims. As additional information is obtained through discovery related to Accused Products and related instrumentalities, STA Group will supplement these contentions.
7	7. The apparatus of claim 1, further comprising a router that establishes the link based on direction from the communication resource manager.	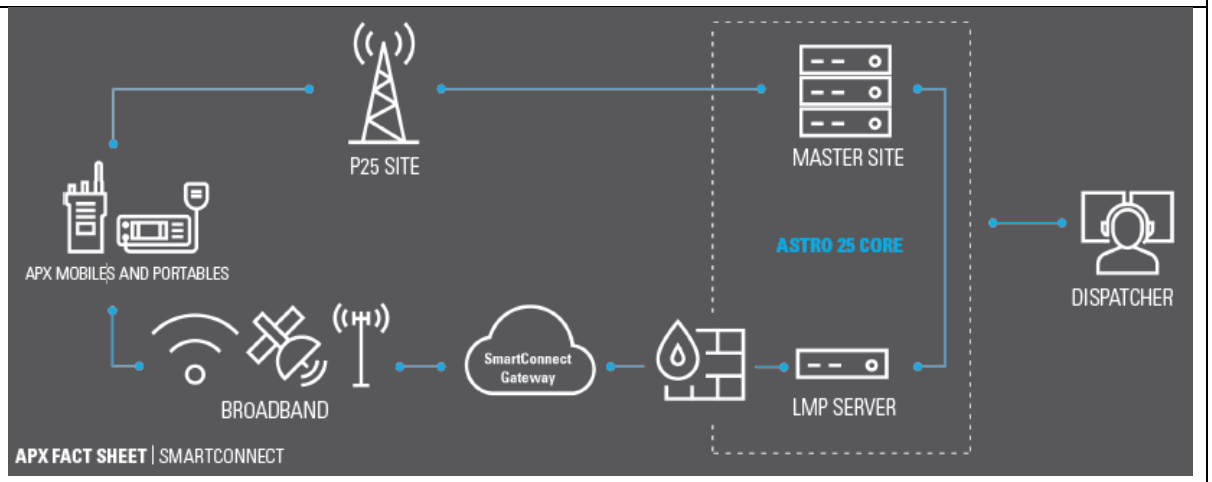 The ASTRO System includes a router (e.g. a SmartConnect Gateway) that establishes the link.

8a	A method to be executed in conjunction with a processor to perform the steps of, comprising	The Motorola ASTRO System and systems that operate in a similar manner performs the claimed method. The Motorola ASTRO System performs the claimed method in conjunction with a processor. 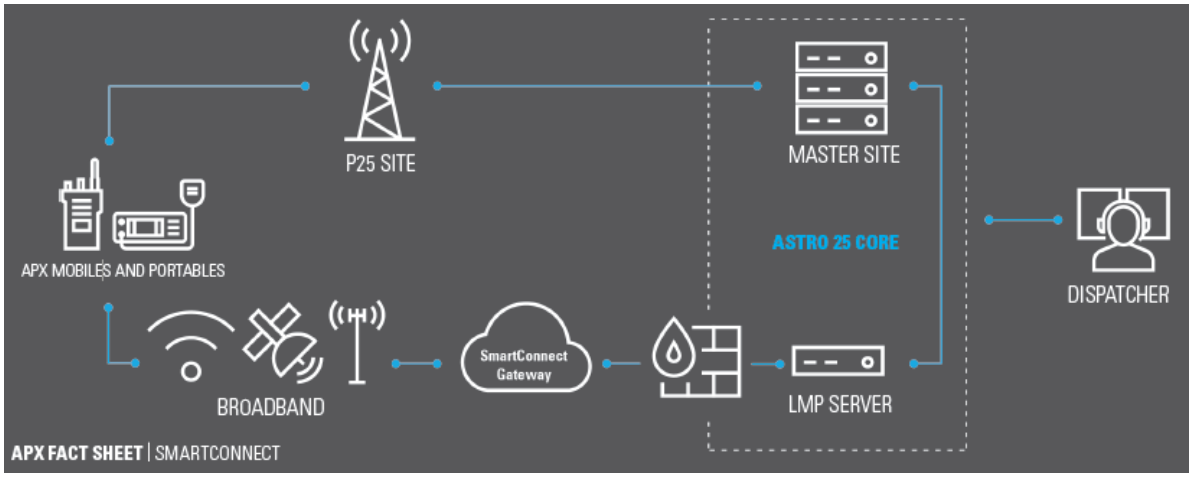
8b	interacting, via a first communication resource manager located in a first domain, with a second communication resource manager located in a second domain;	The Motorola ASTRO System interacts, via a first communication resource manager located in a first domain, with a second communication resource manager located in a second domain. For example, the Motorola ASTRO System utilizes a first communication resource manager such as the Astro Core located in a first network domain, with a second communication resource manager located in a second network domain. Discovery will provide detailed information regarding implementation and identification of the specific components, source code, software and/or other instrumentalities used to carry out the claimed method. Publicly available documentation makes it evident that the Defendants and/or their customers are performing the method in the manner set forth in the asserted claims. As additional

		information is obtained through discovery related to Accused Products and related instrumentalities, STA Group will supplement these contentions.
8c	determining to establish a link for multicasting between users in the first domain and users in the second domain based on presence data of at least one user in the first domain and at least one user in the second domain;	The Motorola ASTRO System determines to establish a link for multicasting between users in the first domain and users in the second domain based on presence data of at least one user in the first domain and at least one user in the second domain. For example, the Motorola ASTRO System determines to establish a link capable of accommodating multicast communications between users in the first domain and users in the second domain based on presence data of at least one user in the first domain and at least one user in the second domain. Discovery will provide detailed information regarding implementation and identification of the specific components, source code, software and/or other instrumentalities used to carry out the claimed method. Publicly available documentation makes it evident that the Defendants and/or their customers are performing the method in the manner set forth in the asserted claims. As additional information is obtained through discovery related to Accused Products and related instrumentalities, STA Group will supplement these contentions.
8d	determining an application to be used in a communication session over the link;	The Motorola ASTRO System determines an application to be used in a communication session over the link. For example, the Motorola ASTRO System determines an application, such as voice or data, to be used in a communication session over the link in accordance with characteristics of the communication session. Discovery will provide detailed information regarding implementation and identification of the specific components, source code, software and/or other instrumentalities used to carry out the claimed method. Publicly available documentation makes it evident that the Defendants and/or their customers are performing the method in the manner set forth in the asserted claims. As additional

		information is obtained through discovery related to Accused Products and related instrumentalities, STA Group will supplement these contentions.
8e	allocating a bandwidth level to be used for the link to accommodate the application;	The Motorola ASTRO System allocates a bandwidth level to be used for the link to accommodate the application. For example, the Motorola ASTRO System allocates a bandwidth level to be used for the link to accommodate the application by determining a path for content. Discovery will provide detailed information regarding implementation and identification of the specific components, source code, software and/or other instrumentalities used to carry out the claimed method. Publicly available documentation makes it evident that the Defendants and/or their customers are performing the method in the manner set forth in the asserted claims. As additional information is obtained through discovery related to Accused Products and related instrumentalities, STA Group will supplement these contentions.
8f	increasing the bandwidth level for the link based on a change in the application and based on an identification of additional presence data for additional users that have joined the communication session, wherein the communication resource managers each includes respective trunking element that is automatically configured to select a transcoding based on available bandwidth;	The Motorola ASTRO System increases the bandwidth level for the link based on a change in the application and based on an identification of additional presence data for additional users that have joined the communication session, wherein the communication resource managers each includes respective trunking element that is automatically configured to select a transcoding based on available bandwidth . For example, the Motorola ASTRO System automatically increases the bandwidth level for the link based on a change in the application and additional users that have joined the communication session. The transcoding scheme for the communications transmitted over the link can be determined based on a variety of properties of the communication session, including available bandwidth. Discovery will provide detailed information regarding implementation and identification of the specific components, source code, software and/or other instrumentalities used to carry out the claimed method. Publicly available

		documentation makes it evident that the Defendants and/or their customers are performing the method in the manner set forth in the asserted claims. As additional information is obtained through discovery related to Accused Products and related instrumentalities, STA Group will supplement these contentions.
8g	adjusting the bandwidth level based on a determination which of the additional users and the users in the first and second domains can transmit data simultaneously during the communication session;	The Motorola ASTRO System adjusts the bandwidth level based on a determination which of the additional users and the users in the first and second domains can transmit data simultaneously during the communication session. For example, the Motorola ASTRO System adjusts the bandwidth level based on a determination which of the additional users and the users in the first and second domains can transmit data simultaneously during the communication session. Discovery will provide detailed information regarding implementation and identification of the specific components, source code, software and/or other instrumentalities used to carry out the claimed method. Publicly available documentation makes it evident that the Defendants and/or their customers are performing the method in the manner set forth in the asserted claims. As additional information is obtained through discovery related to Accused Products and related instrumentalities, STA Group will supplement these contentions.
8h	detecting an absence of active users in the first domain and the second domain; and	The Motorola ASTRO System detects when there are no active users in the first domain and the second domain. Discovery will provide detailed information regarding implementation and identification of the specific components, source code, software and/or other instrumentalities used to carry out the claimed method. Publicly available documentation makes it evident that the Defendants and/or their customers are performing the method in the manner set forth in the asserted claims. As additional information is obtained through discovery related to Accused Products and related instrumentalities, STA Group will supplement these contentions.

8i	tearing down the link based on the absence; wherein the link is a satellite communication link.	The Motorola ASTRO System tears down the link based on the absence, where the link is a satellite communication link. For example, the Motorola ASTRO System tears down the link based on the absence of users, where the link is a satellite communication link. When users return to radio coverage (e.g. are absent from the domain), the user's radio automatically switches back to the radio network. When the radio stops communicating via the satellite connection, the link is torn down. Discovery will provide detailed information regarding implementation and identification of the specific components, source code, software and/or other instrumentalities used to carry out the claimed method. Publicly available documentation makes it evident that the Defendants and/or their customers are performing the method in the manner set forth in the asserted claims. As additional information is obtained through discovery related to Accused Products and related instrumentalities, STA Group will supplement these contentions.
9	9. The method of claim 8, wherein the link is a satellite communication link, and wherein the users of the first domain comprise a virtual talking group (VTG).	The link is a satellite communication link, and wherein the users of the first domain comprise a virtual talking group (VTG). For example, the Motorola ASTRO System allows users to be grouped in talkgroups (e.g. virtual talking groups). Discovery will provide detailed information regarding implementation and identification of the specific components, source code, software and/or other instrumentalities used to carry out the claimed method. Publicly available documentation makes it evident that the Defendants and/or their customers are performing the method in the manner set forth in the asserted claims. As additional information is obtained through discovery related to Accused Products and related instrumentalities, STA Group will supplement these contentions.

Infringement of U.S. Patent No. 8,831,664 by Motorola WAVE System

The Motorola WAVE PTX System infringes at least claims 1 - 3 and 5 of U.S. Patent No. 8,831,664 (the "'664 Patent"). The '664 Patent was filed August 16, 2011, issued September 9, 2014, and is entitled "System and Method for Providing Channel Configurations in a Communications Environment." The '664 Patent claims priority to U.S. Patent No. 8,041,378, filed December 19, 2008 and issued October 18, 2011.

#	U.S. Patent No. 8,831,664	Motorola WAVE System
1a	1. A method, comprising:	The Motorola WAVE System performs the claimed method utilizing the Airbus DS Communications system and systems that operate in a similar manner. The AVTec Scout console interoperates with WAVE. WAVE Gateway connects LMR systems to WAVE cloud servers, AVTec Scout dispatch consoles, and WAVE applications in a single system. Airbus DS communications is a component of AVTec Scout. Accordingly, the Airbus DS Communications system interoperates with the WAVE system, enabling the WAVE system to perform the claimed method. The Motorola WAVE system performs the claimed method as described below.

		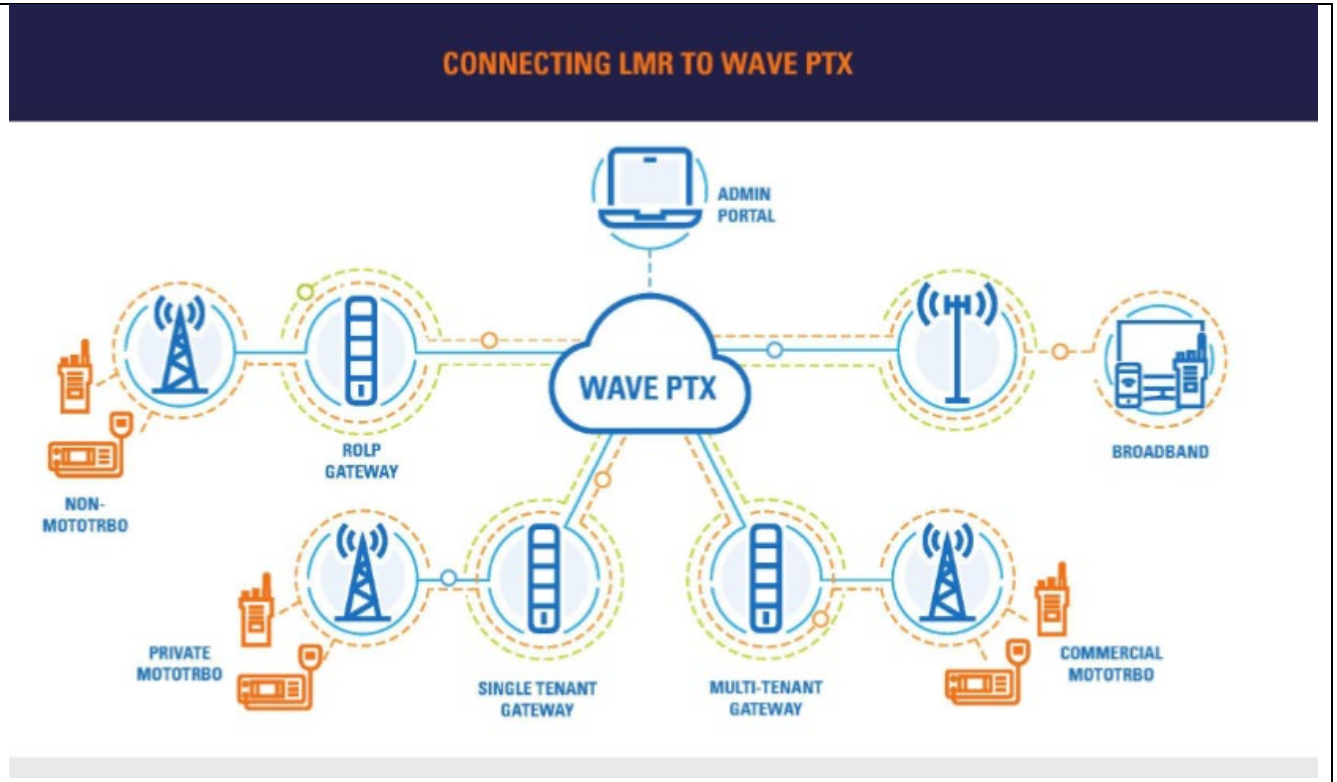
1b	monitoring media streams associated with channels in a communication environment;	The Motorola WAVE System monitors media streams associated with channels in a communication environment. For example, the Motorola WAVE System detects attributes of media streams that are transmitted via channels in a communication environment. Specifically, each WAVE system device utilizing the Airbus DS Communication system monitors media streams provided by the Desktop Alert component. Discovery will provide detailed information regarding implementation and identification of the specific components, source code, software and/or other instrumentalities used to carry out

		the claimed method. Publicly available documentation makes it evident that the Defendants and/or their customers are performing the method in the manner set forth in the asserted claims. As additional information is obtained through discovery related to Accused Products and related instrumentalities, STA Group will supplement these contentions.
1c	receiving an alert in one of the media streams; and	The Motorola WAVE System receives an alert in one of the media streams. For example, the Motorola WAVE System receives communications in the media streams. These communications can include a variety of alerts, including audible and/or visual alerts. Devices within the Airbus DS Communication system receive an alert via the Desktop Alert component in one of the media streams, for example, an alert sent to one or more system endpoints. Discovery will provide detailed information regarding implementation and identification of the specific components, source code, software and/or other instrumentalities used to carry out the claimed method. Publicly available documentation makes it evident that the Defendants and/or their customers are performing the method in the manner set forth in the asserted claims. As additional information is obtained through discovery related to Accused Products and related instrumentalities, STA Group will supplement these contentions.
1d	elevating a priority associated with the media stream receiving the alert, such that an adjustment is made to how the media stream is provisioned to an endpoint in the	The Motorola WAVE System elevates a priority associated with the media stream receiving the alert, such that an adjustment is made to how the media stream is provisioned to an endpoint in the communication environment. For example, the Airbus DS Communication systems elevate a priority associated with the media stream receiving the alert, such that an adjustment is made to how the media stream is provisioned to an endpoint, such as taking precedence over other open applications, appearing on a foremost or primary screen, and/or remaining open until engaged, and the media stream is provisioned to the endpoint in accordance with that adjustment.

	communication environment.	Discovery will provide detailed information regarding implementation and identification of the specific components, source code, software and/or other instrumentalities used to carry out the claimed method. Publicly available documentation makes it evident that the Defendants and/or their customers are performing the method in the manner set forth in the asserted claims. As additional information is obtained through discovery related to Accused Products and related instrumentalities, STA Group will supplement these contentions.
2	2. The method of claim 1, wherein elevating the priority comprises increasing the volume of the media stream receiving the alert.	Elevating the priority comprises increasing the volume of the media stream receiving the alert. For example, elevating the priority can include increasing the volume of the media stream relative to other media streams present in the channel. Discovery will provide detailed information regarding implementation and identification of the specific components, source code, software and/or other instrumentalities used to carry out the claimed method. Publicly available documentation makes it evident that the Defendants and/or their customers are performing the method in the manner set forth in the asserted claims. As additional information is obtained through discovery related to Accused Products and related instrumentalities, STA Group will supplement these contentions.
3	3. The method of claim 1, wherein elevating the priority comprises changing a spatial direction for rendering the media stream receiving the alert.	Elevating the priority comprises changing a spatial direction for rendering the media stream receiving the alert. For example, elevating the priority can include rendering the media stream receiving the alert to a priority spatial direction, such as appearing on a priority screen or different monitor. Discovery will provide detailed information regarding implementation and identification of the specific components, source code, software and/or other instrumentalities used to carry out the claimed method. Publicly available documentation makes it evident that the Defendants and/or their customers are performing the method in the manner set forth in the asserted

		claims. As additional information is obtained through discovery related to Accused Products and related instrumentalities, STA Group will supplement these contentions.
5	5. The method of claim 1, wherein elevating the priority comprises rendering the media stream receiving the alert to a priority spatial direction.	Elevating the priority comprises rendering the media stream receiving the alert to a priority spatial direction. For example, elevating the priority can include rendering the media stream receiving the alert to a priority spatial direction, such as appearing on primary or priority monitor. Discovery will provide detailed information regarding implementation and identification of the specific components, source code, software and/or other instrumentalities used to carry out the claimed method. Publicly available documentation makes it evident that the Defendants and/or their customers are performing the method in the manner set forth in the asserted claims. As additional information is obtained through discovery related to Accused Products and related instrumentalities, STA Group will supplement these contentions.

Infringement of U.S. Patent No. 8,994,830 by Motorola WAVE System

The Motorola WAVE Products infringe at least claims 1, 5, 8, and 11 of U.S. Patent No. 8,994,830 (the "'830 Patent"). The '830 Patent was filed August 8, 2008, issued March 31, 2015, and is entitled "Access to Video Streams on Mobile Communication Devices."

#	U.S. Patent No. 8,994,830	Motorola WAVE System
1a	1. A method comprising:	The Motorola WAVE System performs the claimed method as described below utilizing WAVE PTX mobile and dispatch applications, along with other hardware and software components of the WAVE system which interoperate with those applications including Kodiak ("WAVE PTX"), and with systems that operate in a similar manner.

		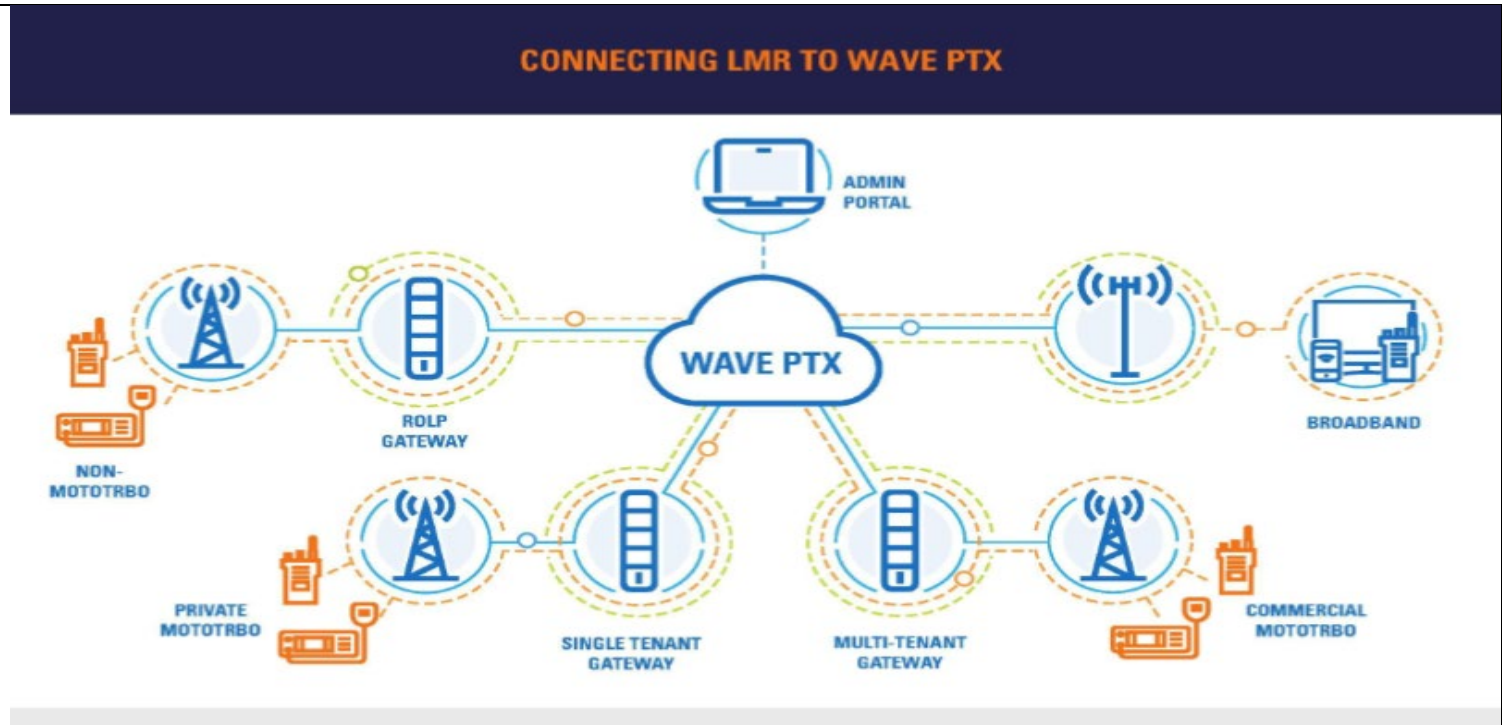
1b	monitoring a selection of a communication channel by a user of a mobile communication device;	The accused system monitors a selection of a communication channel by a user of a mobile communication device. For example, WAVE PTX operates on and through mobile communication devices such as mobile phones, smartphones, tablets, or specialty PTT devices with video functionality. The accused system detects a selection of a particular communication channel by a user with such a device, for example, the selection of a talk group or virtual talk group.

		Discovery will provide detailed information regarding implementation and identification of the specific components, source code, software and/or other instrumentalities used to carry out the claimed method. Publicly available documentation makes it evident that the Defendants and/or their customers are performing the method in the manner set forth in the asserted claims. As additional information is obtained through discovery related to Accused Products and related instrumentalities, STA Group will supplement these contentions.
1c	providing a plurality of radio frequencies on a display of the mobile communication device, each radio frequency being associated with a geographical zone from which a plurality of video feeds associated with the geographic zone are sourced;	WAVE PTX provides a plurality of radio frequencies on a display of the mobile communication device, each radio frequency being associated with a geographical zone from which a plurality of video feeds associated with the geographic zone are sourced. For example, WAVE PTX can provide one or more devices associated with talk group members, as well as groupings of devices and/or media streams. These devices and/or groupings can be associated with a geographic zone, for example, when a talk group is defined by physical location of participants or the association of participants with a particular location or an event which occurs in a location. WAVE PTX provides a plurality of video feeds sourced from the geographic zone, such as from cameras in mobile devices associated with talk group members where the plurality of video feeds is associated with the geographic zone which defines the talk group. Discovery will provide detailed information regarding implementation and identification of the specific components, source code, software and/or other instrumentalities used to carry out the claimed method. Publicly available documentation makes it evident that the Defendants and/or their customers are performing the method in the manner set forth in the asserted claims. As additional information is obtained through discovery related to Accused Products and related instrumentalities, STA Group will supplement these contentions.

1d	monitoring a selection of a radio frequency of the plurality of radio frequencies by the user;	WAVE PTX monitors a selection of a radio frequency of the plurality of radio frequencies by the user. For example, WAVE PTX detects the selection of at least one radio frequency when a user selects a talk group member device from which to pull video. Discovery will provide detailed information regarding implementation and identification of the specific components, source code, software and/or other instrumentalities used to carry out the claimed method. Publicly available documentation makes it evident that the Defendants and/or their customers are performing the method in the manner set forth in the asserted claims. As additional information is obtained through discovery related to Accused Products and related instrumentalities, STA Group will supplement these contentions.
1e	identifying at least one video feed by selecting the at least one video feed from the plurality of video feeds associated with the geographic zone, wherein the at least one video feed is associated with the selected communicatio	WAVE PTX identifies at least one video feed by selecting the at least one video feed from the plurality of video feeds associated with the geographic zone, wherein the at least one video feed is associated with the selected communication channel based on a user policy that identifies one or more video feeds that are relevant to the user when the user accesses the selected communication channel, the one or more video feeds being independent of the selected communication channel. For example, WAVE PTX as operated identifies at least one video feed within the plurality of video feeds associated with the geographic zone and associated with the selected communication channel when a user selects a talk group member and a device associated with that talk group member. This identification is based on a user policy that identifies relevant video feeds based on the selected communication channel and frequency and also whether the user device has enabled video pushing or pulling, but the identification of at least one video feed is not determined solely by the selection of a communication channel as video functionality is not enabled simply by inclusion in a talk group. Discovery will provide detailed information regarding implementation and identification of the specific components, source code, software and/or other instrumentalities used to carry out the claimed method. Publicly available documentation makes it evident that the Defendants and/or their customers are performing the method in the manner set forth in the asserted claims. As additional information is obtained

	n channel based on a user policy that identifies one or more video feeds that are relevant to the user when the user accesses the selected communicatio n channel, the one or more video feeds being independent of the selected communicatio n channel; and	through discovery related to Accused Products and related instrumentalities, STA Group will supplement these contentions.
1f	providing access to the identified at least one video feed to the mobile communicatio n device based on the user policy.	WAVE PTX provides access to the identified at least one video feed to the mobile communication device based on the user policy. For example, WAVE PTX associates the video feed with the communication device in accordance with the user policy. That is, if the origin of the video feed and the communication device have opted into video pushing or pulling, the video feed will be available on the communication device, and video is made available based on user permissions and authorizations. Discovery will provide detailed information regarding implementation and identification of the specific components, source code, software and/or other instrumentalities used to carry out the claimed method.

		Publicly available documentation makes it evident that the Defendants and/or their customers are performing the method in the manner set forth in the asserted claims. As additional information is obtained through discovery related to Accused Products and related instrumentalities, STA Group will supplement these contentions.
5	5. The method of claim 1, wherein the communication channel is a Push-To-Talk (PTT) channel in a PTT communication network and the mobile communication device is a PTT radio.	The communication channel is a Push-To-Talk (PTT) channel in a PTT communication network and the mobile communication device is a PTT radio. For example, WAVE PTX includes PTT radios and mobile devices executing a WAVE PTX Broadband PTT application. Discovery will provide detailed information regarding implementation and identification of the specific components, source code, software and/or other instrumentalities used to carry out the claimed method. Publicly available documentation makes it evident that the Defendants and/or their customers are performing the method in the manner set forth in the asserted claims. As additional information is obtained through discovery related to Accused Products and related instrumentalities, STA Group will supplement these contentions.
8	8. The method of claim 1, wherein the communication channel is associated with a Virtual Talk Group (VTG).	The communication channel is associated with a Virtual Talk Group (VTG). For example, groupings of devices constitute virtual talk groups. Discovery will provide detailed information regarding implementation and identification of the specific components, source code, software and/or other instrumentalities used to carry out the claimed method. Publicly available documentation makes it evident that the Defendants and/or their customers are performing the method in the manner set forth in the asserted claims. As additional information is obtained through discovery related to Accused Products and related instrumentalities, STA Group will supplement these contentions.

11 a	11. The method of claim 1, further comprising:	See 1a.
11 b	identifying a geographical location of the user's mobile communication device using a Global Positioning System;	WAVE PTX System identifies a geographical location of the user's mobile communication device using a Global Positioning System. For example, WAVE PTX mobile communication devices have GPS receivers and can determine their location using the GPS receiver. The location of these devices can be determined using the GPS. Discovery will provide detailed information regarding implementation and identification of the specific components, source code, software and/or other instrumentalities used to carry out the claimed method. Publicly available documentation makes it evident that the Defendants and/or their customers are performing the method in the manner set forth in the asserted claims. As additional information is obtained through discovery related to Accused Products and related instrumentalities, STA Group will supplement these contentions.
11 c	identifying that the at least one video feed is associated with the geographical location; associating the at least one video feed with other mobile	WAVE PTX identifies that the at least one video feed is associated with the geographical location; associating the at least one video feed with other mobile communication devices set to the same channel as the user's mobile communication device. For example, WAVE PTX video feeds can be associated with devices in a group of devices for the geographic location. Devices within the group of devices can communicate with each other. Discovery will provide detailed information regarding implementation and identification of the specific components, source code, software and/or other instrumentalities used to carry out the claimed method. Publicly available documentation makes it evident that the Defendants and/or their customers are performing the method in the manner set forth in the asserted claims. As additional information is obtained

	communication devices set to the same channel as the user's mobile communication device; and	through discovery related to Accused Products and related instrumentalities, STA Group will supplement these contentions.
11d	automatically rendering access to the at least one video feed to the other mobile communication devices.	WAVE PTX automatically renders access to the at least one video feed to the other mobile communication devices. WAVE PTX can automatically push video to individual devices or groups of devices, thereby rendering access to the video feed provided by the device to the other devices. Discovery will provide detailed information regarding implementation and identification of the specific components, source code, software and/or other instrumentalities used to carry out the claimed method. Publicly available documentation makes it evident that the Defendants and/or their customers are performing the method in the manner set forth in the asserted claims. As additional information is obtained through discovery related to Accused Products and related instrumentalities, STA Group will supplement these contentions.

\
\
\
\
\
\
\
\
\
\
\

Infringement of U.S. Patent No. 8,994,830 by Motorola WAVE System

The Motorola WAVE Products infringe at least claims 1, 5, 8, and 11 of U.S. Patent No. 8,994,830 (the "'830 Patent"). The '830 Patent was filed August 8, 2008, issued March 31, 2015, and is entitled "Access to Video Streams on Mobile Communication Devices."

#	U.S. Patent No. 8,994,830	Motorola WAVE System
1a	1. A method comprising:	The Motorola WAVE System performs the claimed method as described below utilizing CommandCentral AWARE platform ***with*** WAVE PTX, including CommandCentral AWARE Enterprise, including with the RTVI application, Smart Client, and other hardware and software components of the WAVE system which interoperate with those applications ("CommandCentral ***with*** WAVE PTX"), and with systems that operate in a similar manner.

		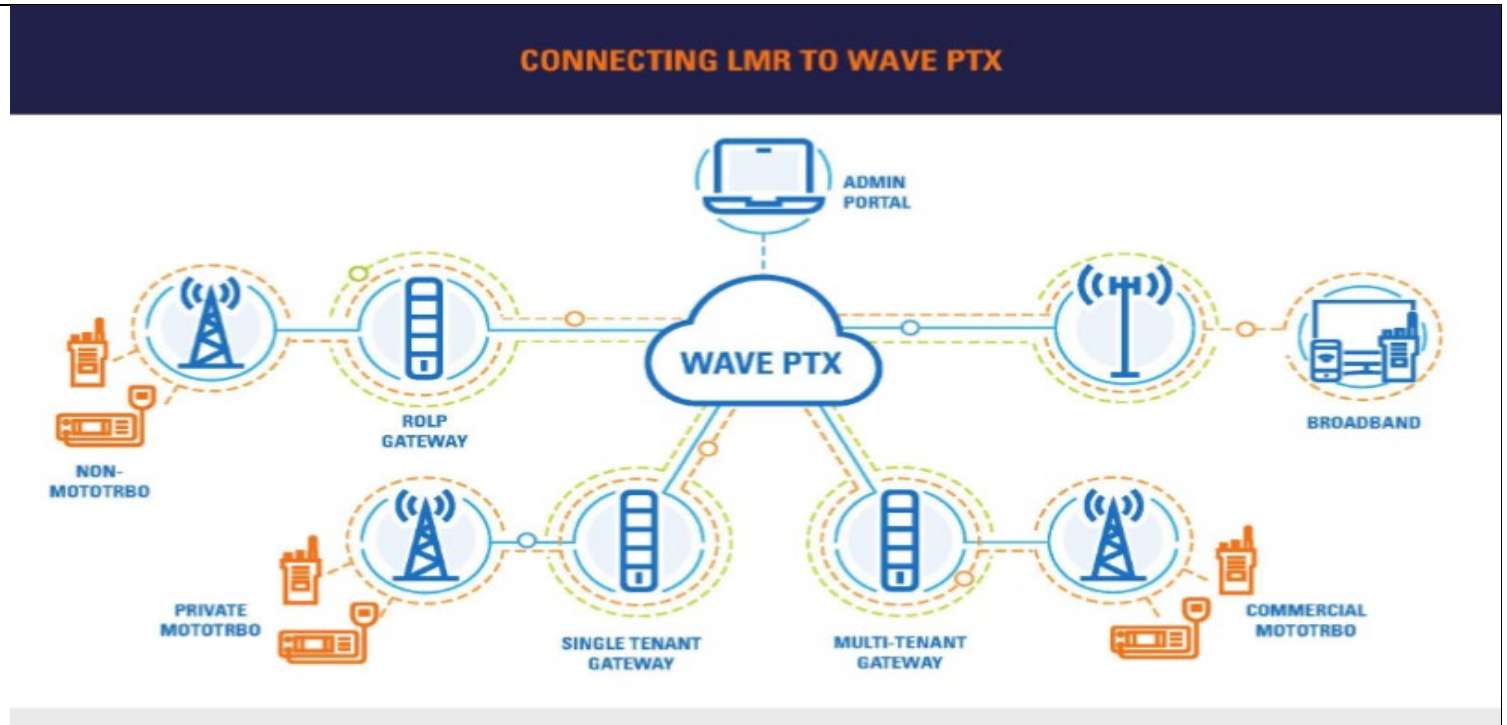
1b	monitoring a selection of a communication channel by a user of a mobile communication device;	The accused system monitors a selection of a communication channel by a user of a mobile communication device. For example, video from camera sources (including body cameras, surveillance cameras, and communication devices such as mobile phones, smartphones, tablets, or specialty PTT devices with video functionality) can be streamed and monitored by CommandCentral and viewed from mobile communication devices such as mobile phones, smartphones, tablets, or specialty PTT devices with video functionality. The accused apparatus detects a selection of a particular communication channel by a user with such a device, for example, the selection of a group of communicators such as a talk group or virtual talk group.

		Discovery will provide detailed information regarding implementation and identification of the specific components, source code, software and/or other instrumentalities used to carry out the claimed method. Publicly available documentation makes it evident that the Defendants and/or their customers are performing the method in the manner set forth in the asserted claims. As additional information is obtained through discovery related to Accused Products and related instrumentalities, STA Group will supplement these contentions.
1c	providing a plurality of radio frequencies on a display of the mobile communication device, each radio frequency being associated with a geographical zone from which a plurality of video feeds associated with the geographic zone are sourced;	CommandCentral with WAVE PTX provides a plurality of radio frequencies on a display of the mobile communication device, each radio frequency being associated with a geographical zone from which a plurality of video feeds associated with the geographic zone are sourced. For example, CommandCentral with WAVE PTX can provide one or more devices associated with talk group members, as well as groupings of devices and/or media streams. These groupings can be associated with a geographic zone, for example, when a talk group is defined by physical location of participants or the association of participants with a particular location or an event which occurs in a location. Discovery will provide detailed information regarding implementation and identification of the specific components, source code, software and/or other instrumentalities used to carry out the claimed method. Publicly available documentation makes it evident that the Defendants and/or their customers are performing the method in the manner set forth in the asserted claims. As additional information is obtained through discovery related to Accused Products and related instrumentalities, STA Group will supplement these contentions.

1d	monitoring a selection of a radio frequency of the plurality of radio frequencies by the user;	CommandCentral with WAVE PTX monitors a selection of a radio frequency of the plurality of radio frequencies by the user. For example, CommandCentral with WAVE PTX detects the selection of at least one radio frequency when a user selects a talk group member device from which to pull video. Discovery will provide detailed information regarding implementation and identification of the specific components, source code, software and/or other instrumentalities used to carry out the claimed method. Publicly available documentation makes it evident that the Defendants and/or their customers are performing the method in the manner set forth in the asserted claims. As additional information is obtained through discovery related to Accused Products and related instrumentalities, STA Group will supplement these contentions.
1e	identifying at least one video feed by selecting the at least one video feed from the plurality of video feeds associated with the geographic zone, wherein the at least one video feed is associated with the selected	CommandCentral with WAVE PTX identifies at least one video feed by selecting the at least one video feed from the plurality of video feeds associated with the geographic zone, wherein the at least one video feed is associated with the selected communication channel based on a user policy that identifies one or more video feeds that are relevant to the user when the user accesses the selected communication channel, the one or more video feeds being independent of the selected communication channel. More specifically, a user's permissions and authorizations govern the video sources a CommandCentral with WAVE PTX user has access to within the system, independent from selection or inclusion in a VTG. Subject to those permissions and authorizations, when a user selects a point of origin, video feed associated with the channel (e.g., VTG) and the point of origin is made available the user. Discovery will provide detailed information regarding implementation and identification of the specific components, source code, software and/or other instrumentalities used to carry out the claimed method. Publicly available documentation makes it evident that the Defendants and/or their customers are performing the method in the manner set forth in the asserted claims. As additional information is obtained through discovery related to Accused Products and related instrumentalities, STA Group will supplement these contentions.

	communication channel based on a user policy that identifies one or more video feeds that are relevant to the user when the user accesses the selected communication channel, the one or more video feeds being independent of the selected communication channel; and	
1f	providing access to the identified at least one video feed to the mobile communication device	CommandCentral with WAVE PTX provides access to the identified at least one video feed to the mobile communication device based on the user policy. CommandCentral associates the video feed with the mobile communication device in accordance with the user policy. That is, after authentication with the CommandCentral server, a user's permissions and authorizations govern the video sources user of the mobile communication device has access to within the system, and access to that video feed is provided subject to those permissions and authorizations.

	based on the user policy.	Discovery will provide detailed information regarding implementation and identification of the specific components, source code, software and/or other instrumentalities used to carry out the claimed method. Publicly available documentation makes it evident that the Defendants and/or their customers are performing the method in the manner set forth in the asserted claims. As additional information is obtained through discovery related to Accused Products and related instrumentalities, STA Group will supplement these contentions.
5	5. The method of claim 1, wherein the communication channel is a Push-To-Talk (PTT) channel in a PTT communication network and the mobile communication device is a PTT radio.	The communication channel is a Push-To-Talk (PTT) channel in a PTT communication network and the mobile communication device is a PTT radio. For example, CommandCentral with WAVE PTX includes PTT radios and mobile devices executing a WAVE PTX Broadband PTT application. Discovery will provide detailed information regarding implementation and identification of the specific components, source code, software and/or other instrumentalities used to carry out the claimed method. Publicly available documentation makes it evident that the Defendants and/or their customers are performing the method in the manner set forth in the asserted claims. As additional information is obtained through discovery related to Accused Products and related instrumentalities, STA Group will supplement these contentions.
8	8. The method of claim 1, wherein the communication channel is associated with a Virtual	The communication channel is associated with a Virtual Talk Group (VTG). For example, groupings of devices constitute virtual talk groups. Discovery will provide detailed information regarding implementation and identification of the specific components, source code, software and/or other instrumentalities used to carry out the claimed method. Publicly available documentation makes it evident that the Defendants and/or their customers are performing the method in the manner set forth in the asserted claims. As additional information is obtained

	Talk Group (VTG).	through discovery related to Accused Products and related instrumentalities, STA Group will supplement these contentions.
11a	11. The method of claim 1, further comprising:	See 1a.
11b	identifying a geographical location of the user's mobile communication device using a Global Positioning System;	CommandCentral with WAVE PTX identifies a geographical location of the user's mobile communication device using a Global Positioning System. For example, WAVE PTX mobile communication devices have GPS receivers and can determine their location using the GPS receiver. The location of these devices can be determined using the GPS. Discovery will provide detailed information regarding implementation and identification of the specific components, source code, software and/or other instrumentalities used to carry out the claimed method. Publicly available documentation makes it evident that the Defendants and/or their customers are performing the method in the manner set forth in the asserted claims. As additional information is obtained through discovery related to Accused Products and related instrumentalities, STA Group will supplement these contentions.
11c	identifying that the at least one video feed is associated with the geographical location; associating the at least one video feed	CommandCentral with WAVE PTX identifies that the at least one video feed is associated with the geographical location; associating the at least one video feed with other mobile communication devices set to the same channel as the user's mobile communication device. For example, CommandCentral with WAVE PTX video feeds can be associated with devices in a group of devices for the geographic location. Devices within the group of devices can communicate with each other. Discovery will provide detailed information regarding implementation and identification of the specific components, source code, software and/or other instrumentalities used to carry out the claimed method.

	with other mobile communication devices set to the same channel as the user's mobile communication device; and	Publicly available documentation makes it evident that the Defendants and/or their customers are performing the method in the manner set forth in the asserted claims. As additional information is obtained through discovery related to Accused Products and related instrumentalities, STA Group will supplement these contentions.
11 d	automatically rendering access to the at least one video feed to the other mobile communication devices.	CommandCentral with WAVE PTX automatically renders access to the at least one video feed to the other mobile communication devices. CommandCentral with WAVE PTX can automatically push video to individual devices or groups of devices, thereby rendering access to the video feed provided by the device to the other devices. Discovery will provide detailed information regarding implementation and identification of the specific components, source code, software and/or other instrumentalities used to carry out the claimed method. Publicly available documentation makes it evident that the Defendants and/or their customers are performing the method in the manner set forth in the asserted claims. As additional information is obtained through discovery related to Accused Products and related instrumentalities, STA Group will supplement these contentions.

\
\
\
\
\
\
\
\
\

Infringement of U.S. Patent No. 8,994,830 by Motorola WAVE System

The Motorola WAVE System infringes at least claims 1, 8, and 11 and 15 of U.S. Patent No. 8,994,830 (the "'830 Patent"). The '830 Patent was filed August 8, 2008, issued March 31, 2015, and is entitled "Access to Video Streams on Mobile Communication Devices."

#	U.S. Patent No. 8,994,830	Motorola WAVE System
1a	1. A method comprising:	The Motorola WAVE System performs the claimed method as described below utilizing CommandCentral AWARE platform, including CommandCentral AWARE Enterprise, including with the RTVI application, Smart Client, and other hardware and software components of the WAVE system which interoperate with those applications ("CommandCentral") as used on Mobile workstations and mobile units, such as laptops in vehicles (including but not limited to Motorola's PremierOne™ Mobile application and MW810 Mobile Workstation) (herein "Mobile Workstations"), and with systems that operate in a similar manner.

		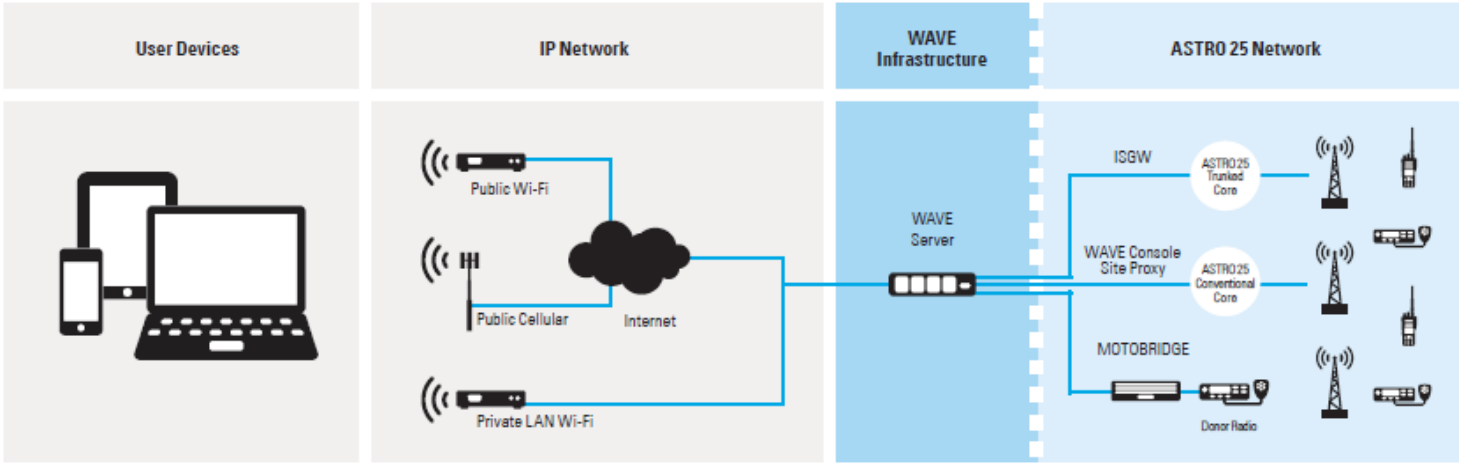
1b	monitoring a selection of a	The accused system monitors a selection of a communication channel by a user of a mobile communication device.

	communication channel by a user of a mobile communication device;	Video from camera sources (including body cameras, surveillance cameras, and communication devices such as mobile phones, smartphones, tablets, body cameras or specialty PTT devices with video functionality) can be streamed and monitored by CommandCentral and viewed from mobile communication devices such as Mobile Workstations. The accused system detects a selection of a particular communication channel by a user with such a device, for example, the selection of a group of communicators such as a talk group or virtual talk group. Discovery will provide detailed information regarding implementation and identification of the specific components, source code, software and/or other instrumentalities used to carry out the claimed method. Publicly available documentation makes it evident that the Defendants and/or their customers are performing the method in the manner set forth in the asserted claims. As additional information is obtained through discovery related to Accused Products and related instrumentalities, STA Group will supplement these contentions.
1c	providing a plurality of radio frequencies on a display of the mobile communication device, each radio frequency being associated with a geographical zone from which a	CommandCentral provides a plurality of radio frequencies on a display of the mobile communication device, each radio frequency being associated with a geographical zone from which a plurality of video feeds associated with the geographic zone are sourced. CommandCentral provides a plurality of radio frequencies on a display by displaying points of origin of video streams on a user interface of a mobile device such as a Mobile Workstation, whether that user interface is a list of points of origin or a map displaying points of origin. Those radio frequencies are associated with a geographical zone from which a plurality of video feeds associated. For example, when the user interface is a map, points of origin are associated with geographic zones where they are located via placement on a map. In other instances, the user interface groups points of origin by proximity and/or relationship with the location of an event. Discovery will provide detailed information regarding implementation and identification of the specific components, source code, software and/or other instrumentalities used to carry out the claimed method. Publicly available documentation makes it evident that the Defendants and/or their customers are performing the method in the manner set forth in the asserted claims. As additional information is obtained

	plurality of video feeds associated with the geographic zone are sourced;	through discovery related to Accused Products and related instrumentalities, STA Group will supplement these contentions.
1d	monitoring a selection of a radio frequency of the plurality of radio frequencies by the user;	CommandCentral monitors a selection of a radio frequency of the plurality of radio frequencies by the user. For example, CommandCentral detects the selection of at least one point of origin when a user selects that point of origin using the user interface of the Mobile Workstation. Discovery will provide detailed information regarding implementation and identification of the specific components, source code, software and/or other instrumentalities used to carry out the claimed method. Publicly available documentation makes it evident that the Defendants and/or their customers are performing the method in the manner set forth in the asserted claims. As additional information is obtained through discovery related to Accused Products and related instrumentalities, STA Group will supplement these contentions.
1e	identifying at least one video feed by selecting the at least one video feed from the plurality of video feeds associated with the geographic	CommandCentral identifies at least one video feed by selecting the at least one video feed from the plurality of video feeds associated with the geographic zone, wherein the at least one video feed is associated with the selected communication channel based on a user policy that identifies one or more video feeds that are relevant to the user when the user accesses the selected communication channel, the one or more video feeds being independent of the selected communication channel. More specifically, a user's permissions and authorizations govern the video sources a CommandCentral user has access to within the system, independent from selection or inclusion in a VTG. Subject to those permissions and authorizations, when a user selects a point of origin, video feed associated with the channel (e.g., VTG) and the point of origin is made available the user.

	zone, wherein the at least one video feed is associated with the selected communication channel based on a user policy that identifies one or more video feeds that are relevant to the user when the user accesses the selected communication channel, the one or more video feeds being independent of the selected communication channel; and	Discovery will provide detailed information regarding implementation and identification of the specific components, source code, software and/or other instrumentalities used to carry out the claimed method. Publicly available documentation makes it evident that the Defendants and/or their customers are performing the method in the manner set forth in the asserted claims. As additional information is obtained through discovery related to Accused Products and related instrumentalities, STA Group will supplement these contentions.
1f	providing access to the identified at least one video	CommandCentral provides access to the identified at least one video feed to the mobile communication device based on the user policy.

	feed to the mobile communication device based on the user policy.	CommandCentral associates the video feed with the Mobile Workstation in accordance with the user policy. That is, after authentication with the CommandCentral Aware server, a user's permissions and authorizations govern the video sources user of the Workstation has access to within the system. Discovery will provide detailed information regarding implementation and identification of the specific components, source code, software and/or other instrumentalities used to carry out the claimed method. Publicly available documentation makes it evident that the Defendants and/or their customers are performing the method in the manner set forth in the asserted claims. As additional information is obtained through discovery related to Accused Products and related instrumentalities, STA Group will supplement these contentions.
8	8. The method of claim 1, wherein the communication channel is associated with a Virtual Talk Group (VTG).	The communication channel is associated with a Virtual Talk Group (VTG). For example, groupings of devices presented on CommandCentral constitute virtual talk groups. Discovery will provide detailed information regarding implementation and identification of the specific components, source code, software and/or other instrumentalities used to carry out the claimed method. Publicly available documentation makes it evident that the Defendants and/or their customers are performing the method in the manner set forth in the asserted claims. As additional information is obtained through discovery related to Accused Products and related instrumentalities, STA Group will supplement these contentions.
11a	11. The method of claim 1, further comprising:	*See* 1a.

11 b	identifying a geographical location of the user's mobile communication device using a Global Positioning System;	CommandCentral identifies a geographical location of the user's mobile communication device using a Global Positioning System. For example, Workstations have GPS receivers and can determine their location using the GPS receiver. The location of these devices can be determined using the GPS. Discovery will provide detailed information regarding implementation and identification of the specific components, source code, software and/or other instrumentalities used to carry out the claimed method. Publicly available documentation makes it evident that the Defendants and/or their customers are performing the method in the manner set forth in the asserted claims. As additional information is obtained through discovery related to Accused Products and related instrumentalities, STA Group will supplement these contentions.
11c	identifying that the at least one video feed is associated with the geographical location; associating the at least one video feed with other mobile communication devices set to the same channel as the user's mobile communication device; and	CommandCentral identifies that the at least one video feed is associated with the geographical location; associating the at least one video feed with other mobile communication devices set to the same channel as the user's mobile communication device. CommandCentral associates_video feeds with geographic location and by video groupings. Devices within the group of devices can communicate with each other. Discovery will provide detailed information regarding implementation and identification of the specific components, source code, software and/or other instrumentalities used to carry out the claimed method. Publicly available documentation makes it evident that the Defendants and/or their customers are performing the method in the manner set forth in the asserted claims. As additional information is obtained through discovery related to Accused Products and related instrumentalities, STA Group will supplement these contentions.

11 d	automatically rendering access to the at least one video feed to the other mobile communication devices.	CommandCentral automatically renders access to the at least one video feed to the other mobile communication devices. CommandCentral can automatically push video to individual devices or groups of devices, thereby rendering access to the video feed provided by the device to the other devices Discovery will provide detailed information regarding implementation and identification of the specific components, source code, software and/or other instrumentalities used to carry out the claimed method. Publicly available documentation makes it evident that the Defendants and/or their customers are performing the method in the manner set forth in the asserted claims. As additional information is obtained through discovery related to Accused Products and related instrumentalities, STA Group will supplement these contentions.
15a	An apparatus, comprising:	The Motorola WAVE System comprises the claimed apparatus as described below, including CommandCentral AWARE platform, including CommandCentral AWARE Enterprise, including with the RTVI application, Smart Client, and other hardware and software components of the WAVE system which interoperate with those applications ("CommandCentral") as used on Mobile workstations and mobile units, such as laptops in vehicles (including but not limited to Motorola's PremierOne™ Mobile application and MW810 Mobile Workstation) (herein "Mobile Workstations"), and with apparatus that operate in a similar manner.

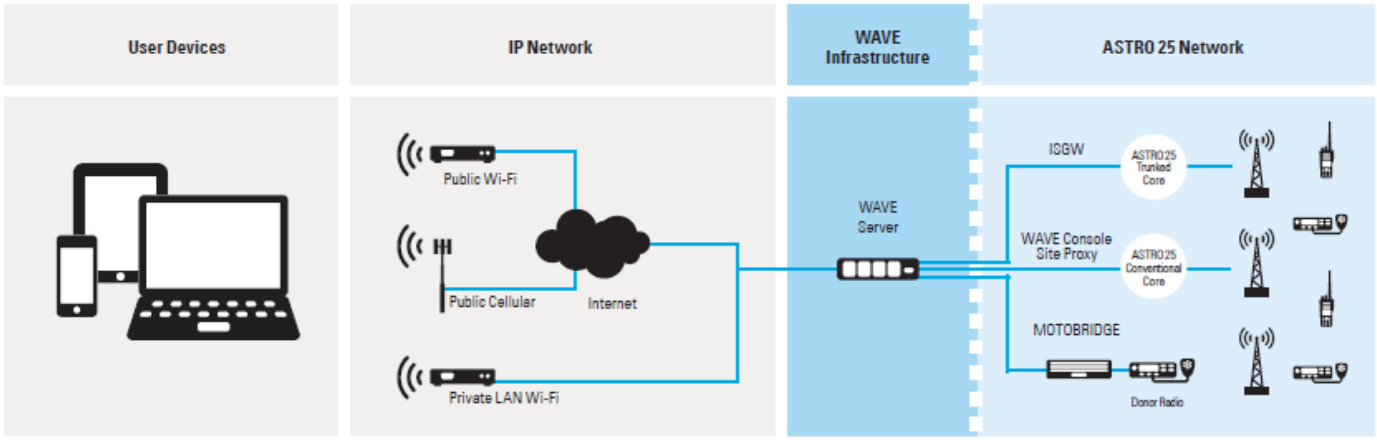
User Devices
IP Network
WAVE Infrastructure
ASTRO 25 Network
Public Wi-Fi
Public Cellular
Internet
Private LAN Wi-Fi
WAVE Server
ISGW
ASTRO25 Trunked Core
WAVE Console Site Proxy
ASTRO25 Conventional Core
MOTOBRIDGE
Donor Radio

15 b	at least one processor; and a memory in communication with the at least one processor, the memory being configured to store a video stream association module executable by the at least one processor, and the video stream association module being executed by the at least one processor to cause operations to be performed, the operations comprising:	The accused apparatus maintains at least one processor; and a memory in communication with the at least one processor, the memory being configured to store a video stream association module executable by the at least one processor, and the video stream association module being executed by the at least one processor to cause operations to be performed. Discovery will provide detailed information regarding implementation and identification of the specific components, source code, software and/or other instrumentalities used to comprise the claimed apparatus. Publicly available documentation makes it evident that the Defendants and/or their customers utilize the claimed apparatus in the manner set forth in the asserted claims. As additional information is obtained through discovery related to Accused Products and related instrumentalities, STA Group will supplement these contentions.
15c	monitoring a **selection** of a communication channel by a	The accused apparatus monitors a selection of a communication channel by a user of a mobile communication device.

	user of a mobile communication device;	Video from camera sources (including body cameras, surveillance cameras, and communication devices such as mobile phones, smartphones, tablets, or specialty PTT devices with video functionality) can be streamed and monitored by CommandCentral and viewed from mobile communication devices such as Mobile Workstations. The accused apparatus detects a selection of a particular communication channel by a user with such a device, for example, the selection of a group of communicators such as a talk group or virtual talk group. Discovery will provide detailed information regarding implementation and identification of the specific components, source code, software and/or other instrumentalities used to comprise the claimed apparatus. Publicly available documentation makes it evident that the Defendants and/or their customers utilize the claimed apparatus in the manner set forth in the asserted claims. As additional information is obtained through discovery related to Accused Products and related instrumentalities, STA Group will supplement these contentions.
15 d	providing a plurality of radio frequencies on a display of the mobile communication device, each radio frequency being associated with a geographical zone from which a plurality of	CommandCentral provides a plurality of radio frequencies on a display of the mobile communication device, each radio frequency being associated with a geographical zone from which a plurality of video feeds associated with the geographic zone are sourced. CommandCentral provides a plurality of radio frequencies on a display by displaying points of origin of video streams on a user interface of a mobile device such as a Mobile Workstation, whether that user interface is a list of points of origin or a map displaying points of origin. Those radio frequencies are associated with a geographical zone from which a plurality of video feeds associated. For example, when the user interface is a map, points of origin are associated with geographic zones where they are located via placement on a map. In other instances, the user interface groups points of origin by proximity and/or by relationship with the location of an event. Discovery will provide detailed information regarding implementation and identification of the specific components, source code, software and/or other instrumentalities used to comprise the claimed apparatus. Publicly available documentation makes it evident that the Defendants and/or their customers utilize the claimed apparatus in the manner set forth in the asserted claims. As additional information is

	video feeds associated with the geographic zone are sourced;	obtained through discovery related to Accused Products and related instrumentalities, STA Group will supplement these contentions.
15e	monitoring a selection of a radio frequency of the plurality of radio frequencies by the user;	CommandCentral monitors a selection of a radio frequency of the plurality of radio frequencies by the user. For example, CommandCentral detects the selection of at least one point of origin when a user selects that point of origin using the user interface of the Mobile Workstation. Discovery will provide detailed information regarding implementation and identification of the specific components, source code, software and/or other instrumentalities used to comprise the claimed apparatus. Publicly available documentation makes it evident that the Defendants and/or their customers utilize the claimed apparatus in the manner set forth in the asserted claims. As additional information is obtained through discovery related to Accused Products and related instrumentalities, STA Group will supplement these contentions.
15f	identifying at least one video feed by selecting the at least one video feed from the plurality of video feeds associated with the geographic	CommandCentral identifies at least one video feed by selecting the at least one video feed from the plurality of video feeds associated with the geographic zone, wherein the at least one video feed is associated with the selected communication channel based on a user policy that identifies one or more video feeds that are relevant to the user when the user accesses the selected communication channel, the one or more video feeds being independent of the selected communication channel. More specifically, a user's permissions and authorizations govern the video sources a CommandCentral user has access to within the system, independent from selection or inclusion in a VTG. Subject to those permissions and authorizations, when a user selects a point of origin, video feed associated with the channel (e.g., VTG) and the point of origin is made available the user.

	zone, wherein the at least one video feed is associated with the selected communication channel based on a user policy that identifies one or more video feeds that are relevant to the user when the user accesses the selected communication channel, the one or more video feeds being independent of the selected communication channel; and	Discovery will provide detailed information regarding implementation and identification of the specific components, source code, software and/or other instrumentalities used to comprise the claimed apparatus. Publicly available documentation makes it evident that the Defendants and/or their customers utilize the claimed apparatus in the manner set forth in the asserted claims. As additional information is obtained through discovery related to Accused Products and related instrumentalities, STA Group will supplement these contentions.
15 g	providing access to the	

	identified at least one video feed to the mobile communication device based on the user policy.	CommandCentral provides access to the identified at least one video feed to the mobile communication device based on the user policy. CommandCentral associates the video feed with the Mobile Workstation in accordance with the user policy. That is, after authentication with the CommandCentral Aware server, a user's permissions and authorizations govern the video sources user of the Workstation has access to within the apparatus. Discovery will provide detailed information regarding implementation and identification of the specific components, source code, software and/or other instrumentalities used to comprise the claimed apparatus. Publicly available documentation makes it evident that the Defendants and/or their customers utilize the claimed apparatus in the manner set forth in the asserted claims. As additional information is obtained through discovery related to Accused Products and related instrumentalities, STA Group will supplement these contentions.