IN THE UNITED STATES DISTRICT COURT
FOR THE EASTERN DISTRICT OF TEXAS
MARSHALL DIVISION

STA GROUP LLC,	§	
Plaintiff,	§	
v.	§	Case No. 2:22-CV-00381-JRG-RSP
MOTOROLA SOLUTIONS, INC.,	§	
Defendant.	§	

CLAIM CONSTRUCTION ORDER

On March 15, 2024, the Court held a hearing to determine the proper construction of the disputed claim terms in U.S. Patent No. 7,324,802 ("the '802 Patent"), U.S. Patent No. 8,489,134 ("the '134 Patent"), U.S. Patent No. 8,831,664 ("the '664 Patent"), and U.S. Patent No. 8,994,830 ("the '830 Patent") (collectively "Asserted Patents"). Having reviewed the arguments made by the parties at the hearing and in their claim construction briefing (Dkt. Nos. 159, 177, 181, 231, 232, 233, 243, 244),[1] having considered the intrinsic evidence, and having made subsidiary factual findings about the extrinsic evidence, the Court hereby issues this Claim Construction Order. *See Phillips v. AWH Corp.*, 415 F.3d 1303, 1314 (Fed. Cir. 2005) (*en banc*); *see also Teva Pharm. USA, Inc. v. Sandoz, Inc.*, 135 S. Ct. 831, 841 (2015).

[1] Citations to the parties' filings are to the filing's number in the docket (Dkt. No.) and pin cites are to the page numbers assigned through ECF.

STA Group Exhibit 2004
Motorola Solutions Inc. v. STA Group LLC
IPR2023-01294

TABLE OF CONTENTS

I. BACKGROUND 3

II. APPLICABLE LAW 7

III. LEVEL OF ORDINARY SKILL IN THE ART 13

IV. CONSTRUCTION OF AGREED TERMS 14

V. CONSTRUCTION OF DISPUTED TERMS 16

A. "wherein the at least one video feed is associated with the selected communication channel … the one or more video feeds being independent of the selected communication channel" 17

B. "video stream association module" 21

C. "link for multicasting between users in the first domain and users in the second domain" 32

D. "trunking element" 35

E. "media stream[s]" 40

F. "channels" 42

VI. CONCLUSION 45

I. BACKGROUND

Plaintiff STA Group LLC ("STA Group" or "Plaintiff") alleges that Defendant Motorola Solutions Inc. ("Defendant" or "MSI") infringes the Asserted Patents. Shortly before the start of the March 15, 2024 hearing, the Court provided the parties with preliminary constructions with the aim of focusing the parties' arguments and facilitating discussion.

The '802 Patent, titled "Method and System for Managing Communication in Emergency Communication System," was filed on January 20, 2005, and issued on January 29, 2008. The '802 Patent relates "to methods and systems for managing communication in an emergency communication system." '802 Patent at 1:9–11.

The Abstract of the '802 Patent states:

> A method and system for managing communication in an emergency communication network is described. The emergency communication network receives a plurality of radio messages from a plurality of channels. The incoming radio messages sometimes overlap in time. Incoming radio messages can be prioritized and played back on the basis of the priority and the time of receipt. In case of overlap of the incoming radio messages in time, the radio message with the highest priority is played first, while the remaining radio messages are stored in a queue. The queue is formed again on the basis of priority. The stored radio messages are played subsequent to the completion of the radio message with the higher priority.

Claim 1 of the '802 Patent is an illustrative claim and recites the following elements:

> 1 A method of managing communication in a communication system, the communication system receiving messages from a plurality of channels, the method comprising:
> [1A] receiving a first message on a first dedicated channel from amongst the plurality of channels at the communication system, the plurality of channels being dedicated to different entities, the first dedicated channel being dedicated to receiving messages from a first entity;
> [1B] receiving a second message on a second dedicated channel being dedicated to receiving messages from a second entity from amongst the plurality of channels at the communication

> system, the second message overlapping with the first message in time;
>
> [1C] determining one or more priorities for the first message received on the first dedicated channel from the first entity and the second message received on the second dedicated channel from the second entity based on at least one pre-defined parameter;
>
> [1D] determining which message out of the first message and the second message should be stored and subsequently played based on the second message overlapping with the first message in time and one or more priorities assigned to the first and the second message;
>
> [1E] playing the message having a higher priority between the first and the second message;
>
> [1F] storing at least one message having a lower priority between the first and the second message based on the determination; and
>
> [1G] playing the stored message subsequent to completing playing of the message having higher priority.

The ’134 Patent, titled “System and Method for Providing Presence Based Trunking in a Network Environment,” was filed on September 2, 2008, and issued on July 16, 2013. The ’134 Patent relates “to the field of communications and, more particularly, to a system and a method for providing presence based trunking in a network environment.” ’134 Patent at 1:7–9.

The Abstract of the ’134 Patent states:

> A method is provided in one example implementation and the method includes interacting, via a first communication resource manager located in a first domain, with a second communication resource manager located in a second domain. The method further includes determining whether to establish a link for multicasting between users in the first domain and users in the second domain, and the link between the domains is established based on presence data of at least one user in the first domain and at least one user in the second domain.

Claim 1 of the ’134 Patent is an illustrative claim and recites the following elements (disputed terms in italics):

> 1.An apparatus, comprising:
>
> a first communication resource manager located in a first domain and operable to interact with a second communication

> resource manager located in a second domain, wherein the first communication resource manager is configured to:
>
> determine to establish a *link for multicasting between users in the first domain and users in the second domain* based on presence data of at least one user in the first domain and at least one user in the second domain; determine an application to be used in a communication session over the link;
>
> allocate a bandwidth level to be used for the link to accommodate the application;
>
> increase the bandwidth level for the link based on a change in the application and based on an identification of additional presence data for additional users that have joined the communication session, wherein the communication resource managers each includes respective that is automatically configured to select a transcoding based on available bandwidth;
>
> adjust the bandwidth level based on a determination which of the additional users and the users in the first and second domains can transmit data simultaneously during the communication session;
>
> detect an absence of active users in the first domain and the second domain; and
>
> tear down the link based on the absence; wherein the link is a satellite communication link.

The ’664 Patent, titled “System and Method for Providing Channel Configurations in a Communications Environment,” was filed on August 16, 2011, and issued on September 9, 2014. The ’664 Patent relates “to the field of communications and, more particularly, to a system and a method for providing channel configurations in a communications environment..” ’664 Patent at 1:18–21.

The Abstract of the ’664 Patent states:

> A method is provided in one example embodiment and includes monitoring media streams associated with channels in a communication environment. The method also includes receiving an alert in one of the media streams and elevating a priority associated with the media stream receiving the alert. Elevating the priority can include increasing the volume of the media stream receiving the alert, changing a spatial direction for rendering the media stream receiving the alert, rendering the media stream receiving the alert to a priority spatial direction, identifying a primary channel and

> rendering the alert message to the primary channel, turning a volume down on media streams not receiving the alert, or a combination thereof.

Claim 1 of the '664 Patent is an illustrative claim and recites the following elements (disputed terms in italics):

> 1. A method, comprising:
> monitoring *media streams* associated with *channels* in a communication environment;
> receiving an alert in one of the *media streams*; and
> elevating a priority associated with the *media stream* receiving the alert, such that an adjustment is made to how the media stream is provisioned to an endpoint in the communication environment.

The '830 Patent, titled "Access to Video Streams on Mobile Communication Devices," was filed on August 8, 2008, and issued on March 31, 2015. The '830 Patent relates "to communication systems. In an example embodiment, the disclosure relates to providing access to video streams associated with communication channels in a communication network." '830 Patent at 1:6–9.

The Abstract of the '830 Patent states:

> A method and apparatus to provide access to video streams associated with communication channels in a communication network are described. The method may comprise monitoring selection of a communication channel by a user of a mobile communication device, identifying at least one video feed associated with the selected channel, and providing access to the mobile communication device to the selected at least one video feed. Providing access may comprise associating the selected video stream with the mobile communication device.

Claim 1 of the '830 Patent is an illustrative claim and recites the following elements (disputed terms in italics):

> 1. A method comprising:
> [1A] monitoring a selection of a communication channel by a user of a mobile communication device;

[1B] providing a plurality of radio frequencies on a display of the mobile communication device, each radio frequency being associated with a geographical zone from which a plurality of video feeds associated with the geographic zone are sourced;

[1C] monitoring a selection of a radio frequency of the plurality of radio frequencies by the user.

[1D] identifying at least one video feed by selecting the at least one video feed from the plurality of video feeds associated with the geographic zone, *wherein the at least one video feed is associated with the selected communication channel* based on a user policy that identifies one or more video feeds that are relevant to the user when the user accesses the selected communication channel, *the one or more video feeds being independent of the selected communication channel*; and

[1E] providing access to the identified at least one video feed to the mobile communication device based on the user policy.

II. APPLICABLE LAW

A. Claim Construction

"It is a 'bedrock principle' of patent law that 'the claims of a patent define the invention to which the patentee is entitled the right to exclude.'" *Phillips v. AWH Corp.*, 415 F.3d 1303, 1312 (Fed. Cir. 2005) (en banc) (quoting *Innova/Pure Water Inc. v. Safari Water Filtration Sys., Inc.*, 381 F.3d 1111, 1115 (Fed. Cir. 2004)). To determine the meaning of the claims, courts start by considering the intrinsic evidence. *Id.* at 1313; *C.R. Bard, Inc. v. U.S. Surgical Corp.*, 388 F.3d 858, 861 (Fed. Cir. 2004); *Bell Atl. Network Servs., Inc. v. Covad Commc'ns Grp., Inc.*, 262 F.3d 1258, 1267 (Fed. Cir. 2001). The intrinsic evidence includes the claims themselves, the specification, and the prosecution history. *Phillips*, 415 F.3d at 1314; *C.R. Bard, Inc.*, 388 F.3d at 861. The general rule—subject to certain specific exceptions discussed *infra*—is that each claim term is construed according to its ordinary and accustomed meaning as understood by one of ordinary skill in the art at the time of the invention in the context of the patent. *Phillips*, 415 F.3d at 1312–13; *Alloc, Inc. v. Int'l Trade Comm'n*, 342 F.3d 1361, 1368 (Fed. Cir. 2003); *Azure*

Networks, LLC v. CSR PLC, 771 F.3d 1336, 1347 (Fed. Cir. 2014) (quotation marks omitted) ("There is a heavy presumption that claim terms carry their accustomed meaning in the relevant community at the relevant time.") *cert. granted, judgment vacated,* 135 S. Ct. 1846 (2015).

"The claim construction inquiry . . . begins and ends in all cases with the actual words of the claim." *Renishaw PLC v. Marposs Societa' per Azioni*, 158 F.3d 1243, 1248 (Fed. Cir. 1998). "[I]n all aspects of claim construction, 'the name of the game is the claim.'" *Apple Inc. v. Motorola, Inc.*, 757 F.3d 1286, 1298 (Fed. Cir. 2014) (quoting *In re Hiniker Co.*, 150 F.3d 1362, 1369 (Fed. Cir. 1998)) *overruled on other grounds by Williamson v. Citrix Online, LLC*, 792 F.3d 1339 (Fed. Cir. 2015). First, a term's context in the asserted claim can be instructive. *Phillips*, 415 F.3d at 1314. Other asserted or unasserted claims can also aid in determining the claim's meaning, because claim terms are typically used consistently throughout the patent. *Id.* Differences among the claim terms can also assist in understanding a term's meaning. *Id*. For example, when a dependent claim adds a limitation to an independent claim, it is presumed that the independent claim does not include the limitation. *Id*. at 1314–15.

"[C]laims 'must be read in view of the specification, of which they are a part.'" *Id*. (quoting *Markman v. Westview Instruments, Inc.*, 52 F.3d 967, 979 (Fed. Cir. 1995) (en banc)). "[T]he specification 'is always highly relevant to the claim construction analysis. Usually, it is dispositive; it is the single best guide to the meaning of a disputed term.'" *Id*. (quoting *Vitronics Corp. v. Conceptronic, Inc.*, 90 F.3d 1576, 1582 (Fed. Cir. 1996)); *Teleflex, Inc. v. Ficosa N. Am. Corp.*, 299 F.3d 1313, 1325 (Fed. Cir. 2002). This is true because a patentee may define his own terms, give a claim term a different meaning than the term would otherwise possess, or disclaim or disavow the claim scope. *Phillips*, 415 F.3d at 1316. In these situations, the inventor's lexicography governs. *Id*.

The specification may also resolve ambiguous claim terms "where the ordinary and accustomed meaning of the words used in the claims lack sufficient clarity to permit the scope of the claim to be ascertained from the words alone." *Teleflex, Inc.*, 299 F.3d at 1325. But, "'[a]lthough the specification may aid the court in interpreting the meaning of disputed claim language, particular embodiments and examples appearing in the specification will not generally be read into the claims.'" *Comark Commc'ns, Inc. v. Harris Corp.*, 156 F.3d 1182, 1187 (Fed. Cir. 1998) (quoting *Constant v. Advanced Micro-Devices, Inc.*, 848 F.2d 1560, 1571 (Fed. Cir. 1988)); *see also Phillips*, 415 F.3d at 1323. "[I]t is improper to read limitations from a preferred embodiment described in the specification—even if it is the only embodiment—into the claims absent a clear indication in the intrinsic record that the patentee intended the claims to be so limited." *Liebel-Flarsheim Co. v. Medrad, Inc.*, 358 F.3d 898, 913 (Fed. Cir. 2004).

The prosecution history is another tool to supply the proper context for claim construction because, like the specification, the prosecution history provides evidence of how the U.S. Patent and Trademark Office ("PTO") and the inventor understood the patent. *Phillips*, 415 F.3d at 1317. However, "because the prosecution history represents an ongoing negotiation between the PTO and the applicant, rather than the final product of that negotiation, it often lacks the clarity of the specification and thus is less useful for claim construction purposes." *Id.* at 1318; *see also Athletic Alts., Inc. v. Prince Mfg.*, 73 F.3d 1573, 1580 (Fed. Cir. 1996) (ambiguous prosecution history may be "unhelpful as an interpretive resource").

Although extrinsic evidence can also be useful, it is "'less significant than the intrinsic record in determining the legally operative meaning of claim language.'" *Phillips*, 415 F.3d at 1317 (quoting *C.R. Bard, Inc.*, 388 F.3d at 862). Technical dictionaries and treatises may help a court understand the underlying technology and the manner in which one skilled in the art might

use claim terms, but technical dictionaries and treatises may provide definitions that are too broad or may not be indicative of how the term is used in the patent. *Id*. at 1318. Similarly, expert testimony may aid a court in understanding the underlying technology and determining the particular meaning of a term in the pertinent field, but an expert's conclusory, unsupported assertions as to a term's definition are not helpful to a court. *Id*. Extrinsic evidence is "less reliable than the patent and its prosecution history in determining how to read claim terms." *Id*. The Supreme Court has explained the role of extrinsic evidence in claim construction:

> In some cases, however, the district court will need to look beyond the patent's intrinsic evidence and to consult extrinsic evidence in order to understand, for example, the background science or the meaning of a term in the relevant art during the relevant time period. *See, e.g., Seymour v. Osborne*, 11 Wall. 516, 546 (1871) (a patent may be "so interspersed with technical terms and terms of art that the testimony of scientific witnesses is indispensable to a correct understanding of its meaning"). In cases where those subsidiary facts are in dispute, courts will need to make subsidiary factual findings about that extrinsic evidence. These are the "evidentiary underpinnings" of claim construction that we discussed in *Markman*, and this subsidiary factfinding must be reviewed for clear error on appeal.

Teva Pharm. USA, Inc. v. Sandoz, Inc., 574 U.S. 318, 331–32 (2015).

B. Departing from the Ordinary Meaning of a Claim Term

There are "only two exceptions to [the] general rule" that claim terms are construed according to their plain and ordinary meaning: "1) when a patentee sets out a definition and acts as his own lexicographer, or 2) when the patentee disavows the full scope of the claim term either in the specification or during prosecution."[2] *Golden Bridge Tech., Inc. v. Apple Inc.*, 758 F.3d 1362, 1365 (Fed. Cir. 2014) (quoting *Thorner v. Sony Comput. Entm't Am. LLC*, 669 F.3d 1362, 1365 (Fed. Cir. 2012)); *see also GE Lighting Sols., LLC v. AgiLight, Inc.*, 750 F.3d 1304, 1309

[2] Some cases have characterized other principles of claim construction as "exceptions" to the general rule, such as the statutory requirement that a means-plus-function term is construed to cover the corresponding structure disclosed in the specification. *See, e.g., CCS Fitness, Inc. v. Brunswick Corp.*, 288 F.3d 1359, 1367 (Fed. Cir. 2002).

(Fed. Cir. 2014) ("[T]he specification and prosecution history only compel departure from the plain meaning in two instances: lexicography and disavowal."). The standards for finding lexicography or disavowal are "exacting." *GE Lighting Sols.*, 750 F.3d at 1309.

To act as his own lexicographer, the patentee must "clearly set forth a definition of the disputed claim term," and "clearly express an intent to define the term." *Id.* (quoting *Thorner*, 669 F.3d at 1365); *see also Renishaw*, 158 F.3d at 1249. The patentee's lexicography must appear "with reasonable clarity, deliberateness, and precision." *Renishaw*, 158 F.3d at 1249.

To disavow or disclaim the full scope of a claim term, the patentee's statements in the specification or prosecution history must amount to a "clear and unmistakable" surrender. *Cordis Corp. v. Bos. Sci. Corp.*, 561 F.3d 1319, 1329 (Fed. Cir. 2009); *see also Thorner*, 669 F.3d at 1366 ("The patentee may demonstrate intent to deviate from the ordinary and accustomed meaning of a claim term by including in the specification expressions of manifest exclusion or restriction, representing a clear disavowal of claim scope."). "Where an applicant's statements are amenable to multiple reasonable interpretations, they cannot be deemed clear and unmistakable." *3M Innovative Props. Co. v. Tredegar Corp.*, 725 F.3d 1315, 1326 (Fed. Cir. 2013).

C. Definiteness Under 35 U.S.C. § 112, ¶ 2 (pre-AIA) / § 112(b) (AIA)

Patent claims must particularly point out and distinctly claim the subject matter regarded as the invention. 35 U.S.C. § 112, ¶ 2. A claim, when viewed in light of the intrinsic evidence, must "inform those skilled in the art about the scope of the invention with reasonable certainty." *Nautilus Inc. v. Biosig Instruments, Inc.*, 572 U.S. 898, 910 (2014). If it does not, the claim fails § 112, ¶ 2 and is therefore invalid as indefinite. *Id.* at 901. Whether a claim is indefinite is determined from the perspective of one of ordinary skill in the art as of the time the application for the patent was filed. *Id.* at 911. As it is a challenge to the validity of a patent, the failure of any claim in suit to comply with § 112 must be shown by clear and convincing evidence. *BASF Corp. v. Johnson*

Matthey Inc., 875 F.3d 1360, 1365 (Fed. Cir. 2017). "[I]ndefiniteness is a question of law and in effect part of claim construction." *ePlus, Inc. v. Lawson Software, Inc.*, 700 F.3d 509, 517 (Fed. Cir. 2012).

When a term of degree is used in a claim, "the court must determine whether the patent provides some standard for measuring that degree." *Biosig Instruments, Inc. v. Nautilus, Inc.*, 783 F.3d 1374, 1378 (Fed. Cir. 2015) (quotation marks omitted). Likewise, when a subjective term is used in a claim, "a court must determine whether the patent's specification supplies some standard for measuring the scope of the [term]." *Ernie Ball, Inc. v. Earvana, LLC*, 502 F. App'x 971, 980 (Fed. Cir. 2013) (citations omitted). The standard "must provide objective boundaries for those of skill in the art." *Interval Licensing LLC v. AOL, Inc.*, 766 F.3d 1364, 1371 (Fed. Cir. 2014).

D. Means-Plus-Function Limitations

Where a claim limitation is expressed in "means plus function" language and does not recite definite structure in support of its function, the limitation is subject to 35 U.S.C. § 112, ¶ 6. *Braun Med., Inc. v. Abbott Labs.*, 124 F.3d 1419, 1424 (Fed. Cir. 1997). In relevant part, 35 U.S.C. § 112, ¶ 6 mandates that "such a claim limitation 'be construed to cover the corresponding structure . . . described in the specification and equivalents thereof.'" *Id.* (citing 35 U.S.C. § 112, ¶ 6). Accordingly, when faced with means-plus-function limitations, courts "must turn to the written description of the patent to find the structure that corresponds to the means recited in the [limitations]." *Id.*

Construing a means-plus-function limitation involves multiple steps. "The first step in construing [a means-plus-function] limitation is a determination of the function of the means-plus-function limitation." *Medtronic, Inc. v. Advanced Cardiovascular Sys., Inc.*, 248 F.3d 1303, 1311 (Fed. Cir. 2001). Once a court has determined the limitation's function, "the next step is to determine the corresponding structure disclosed in the specification and equivalents thereof." *Id.*

A "structure disclosed in the specification is 'corresponding' structure only if the specification or prosecution history clearly links or associates that structure to the function recited in the claim." *Id.* Moreover, the focus of the "corresponding structure" inquiry is not merely whether a structure is capable of performing the recited function, but rather whether the corresponding structure is "clearly linked or associated with the [recited] function." *Id*.

III. LEVEL OF ORDINARY SKILL IN THE ART

It is well established that patents are interpreted from the perspective of one of ordinary skill in the art ("POSITA"). *See Phillips*, 415 F.3d at 1313 ("[T]he ordinary and customary meaning of a claim term is the meaning that the term would have to a person of ordinary skill in the art in question at the time of the invention, i.e., as of the effective filing date of the patent application."). The Federal Circuit has advised that the "[f]actors that may be considered in determining the level of skill in the art include: (1) the educational level of the inventors; (2) the type of problems encountered in the art; (3) prior art solutions to those problems; (4) the rapidity with which innovations are made; (5) sophistication of the technology; and (6) education level of active workers in the field." *Env'tl Designs, Ltd. v. Union Oil Co. of California*, 713 F.2d 693, 696 (Fed. Cir. 1983). "These factors are not exhaustive but are merely a guide to determining the level of ordinary skill in the art." *Daiichi Sankyo Co. Ltd. v. Apotex, Inc.*, 501 F.3d 1254, 1256 (Fed. Cir. 2007).

Plaintiff contends a POSITA would have had a bachelor's degree in electrical engineering, computer engineering, computer science, or a related field, and two to three years of experience in the design or development of telecommunication systems, or the equivalent. (Dkt. No. 159 at 9). Plaintiff also contends that additional graduate education could substitute for professional experience, or significant experience in the field could substitute for formal education. *Id.*

Defendant's expert, Dr. Almeroth, opines that a POSITA "in the field of the '830 Patent at the time of the earliest alleged priority date (August 8, 2008) would have had at least a bachelor's degree in computer science, electrical engineering, or a similar field, and would have had approximately 2 years industry experience in networking or communication systems, including interoperating different types of networks that include video feeds. (Dkt. No. 177-2 at ¶ 27). Dr. Almeroth further opines that additional "education in the fields of electrical engineering or computer science such as a masters or doctorate degree may serve as a substitute for experience in the field." *Id.*

Having considered the parties' proposals, and the factors that may be considered in determining the level of skill in the art, the Court finds that a POSITA would have had a bachelor's degree in electrical engineering, computer engineering, computer science, or a related field, and two years of experience in the design or development of telecommunication systems, or the equivalent. The Court further finds that additional graduate education could substitute for professional experience, or significant experience in the field could substitute for formal education. The Court also finds, and the parties agree, that any differences in the parties' proposals do not appear to be significant for the purpose of claim construction. (Dkt. No. 177 at 11 n.1).

IV. CONSTRUCTION OF AGREED TERMS

The parties agreed to the construction of the following claim terms:

Claim Term/Phrase	Agreed Construction
Order of steps '830 Patent: Claims 1, 15	The "monitoring a selection of a communication channel" must be performed before the "identifying" step.
"Push-To-Talk (PTT) channel in a PTT communication network" '830 Patent: Claim 5	"a channel for transmitting half-duplex communications in a Push-to-Talk communication network"

Order of steps '802 Patent: Claims 1, 2, 4, 5, 7, 9, 10, 18, and 19	The "receiving" and "determining" steps must occur before the "storing at least one message…" step, and the "storing at least one message…" step must occur before the "playing the stored message" step.
"the second message overlapping with the first message in time" / "overlapping in time" '802 Patent: Claims 1, 18, 19	"the second message and the first message are received overlapping in time."
"presence data of at least one user in the first domain and at least one user in the second domain" '134 Patent: Claims 1, 8	"presence data of both of at least one user in the first domain and at least one user in the second domain"
"communication resource manager" '134 Patent: Claims 1, 8	"software and/or hardware that controls a satellite link for multicasting and tracks presence data

Dkt. No. 234-1 at 2, 4, 8, 10, 13, 18 (Joint Claim Construction Chart). In view of the parties' agreement on the proper construction of the identified terms, the Court hereby **ADOPTS** the parties' agreed constructions.

During the claim construction hearing, the parties agreed to the construction of the following terms:

Claim Term/Phrase	**Agreed Construction**
Order of steps '830 Patent: Claim 1	The "providing a plurality of radio frequencies…" step and the "monitoring a selection of a radio frequency" step must be performed before the "identifying …" step.
Order of steps '802 Patent: Claim 1	The steps of the claim must be performed in the following order: (1) the receiving steps [1A] and [1B] may be performed in any order; (2) the "determining one or more priorities" step [1C] must be performed after the receiving steps [1A] and [1B];

	(3) the "determining which message" step [1D] must be performed after the "determining one or more priorities" step [1C]; (4) the "determining which message" step [1D] must be performed before the "playing the message having a higher priority" step [1E] and the "storing at least one message" step [1F]; and (5) the "playing the message having a higher priority" step [1E] and the "storing at least one message" step [1F] may be performed in any order; and (6) the "playing the stored message" step [1G] must be performed after the "storing at least one message" step [1F] and the "playing the message having a higher priority" step [1E].
"presence data" '134 Patent: Claim 8	"data that conveys a user's availability to communicate"
Order of steps '134 Patent: Claims 8 and 9	The steps of the claim must be performed in the recited order.
"endpoint" '664 Patent: Claim 1	"end-user device"
Order of steps '664 Patent: Claim 1	The steps of the claim must be performed in the recited order.

In view of the parties' agreement on the proper construction of the identified terms, the Court hereby **ADOPTS** the parties' agreed constructions.

V. CONSTRUCTION OF DISPUTED TERMS

The parties dispute the meaning and scope of six terms or phrases in the Asserted Patents. Each dispute is addressed below.

A. "wherein the at least one video feed is associated with the selected communication channel … the one or more video feeds being independent of the selected communication channel"

Disputed Term	Plaintiff's Proposal	Defendant's Proposal
"wherein the at least one video feed is associated with the selected communication channel … the one or more video feeds being independent of the selected communication channel"	Plain and ordinary meaning.	Indefinite.

1. Analysis

The phrase "wherein the at least one video feed is associated with the selected communication channel … the one or more video feeds being independent of the selected communication channel" appears in Asserted Claim 1 of the '830 Patent. The parties dispute whether Claim 1 is indefinite, because it recites that "the at least one video feed is associated with the selected communication channel," and also recites that "the one or more video feeds being independent of the selected communication channel." According to Defendant, a POSITA is left guessing as to claim scope "because it is unclear how the identified video feed and selected communication channel can at the same time be both 'associated' with each other and yet 'independent' of each other." (Dkt. No. 177 at 12) (citing Dkt. No. 177-2 at ¶ 31).

Under 35 U.S.C. § 112, a patent claim must "particularly point[] out and distinctly claim[] the subject matter" regarded as the invention. In particular, a claim, viewed in light of the specification and prosecution history, must "inform those skilled in the art about the scope of the invention with reasonable certainty." *Nautilus*, 572 U.S. at 910; *see also Interval Licensing*, 766 F.3d at 1371 ("The claims, when read in light of the specification and the prosecution history, must provide objective boundaries for those of skill in the art."). As a challenger to the patent's validity, the failure to comply with § 112 must be shown by clear and convincing evidence. *BASF Corp. v. Johnson Matthey Inc.*, 875 F.3d 1360, 1365 (Fed. Cir. 2017).

The relevant language of Claim 1 of the '830 Patent follows:

> identifying at least one video feed by selecting the at least one video feed from the plurality of video feeds associated with the geographic zone, wherein the at least one video feed is associated with the selected communication channel *based on a user policy that identifies one or more video feeds that are relevant to the user when the user accesses the selected communication channel, the one or more video feeds being independent of the selected communication channel*

Claim 1 (emphasis added). The underlined language was added during prosecution as shown below:

> 1. (Currently Amended) A method comprising:
>
> monitoring a selection of a communication channel by a user of a mobile communication device;
>
> identifying at least one video feed associated with the selected communication channel based on a user policy that identifies one or more video feeds that are relevant to the user when the user accesses the selected communication channel, the one or more video feeds being independent of the selected communication channel; and
>
> providing access to the identified at least one video feed to the mobile communication device based on the user policy~~, wherein providing the access is based on a user policy that identifies one or more video feeds that are relevant to the user when the user accesses the selected communication channel~~.

(Dkt. No. 177-3 at 3) (highlight added). The patentees amended the claim to include this disputed language to overcome the prior art. Specifically, the patentees argued that the prior art did not disclose "the one or more video feeds being independent of the selected communication channel," because it only disclosed a user "obtaining/viewing television content" by selecting a "desired television channel." *Id.* at 10. Thus, the patentees distinguished the prior art "television channel" by arguing that the video in the prior art was exclusive to the selected television channel. In contrast, the video feeds in the amended claims are independent of the selected communication channel. In other words, they are capable of being associated with one or more communication

channels.

Defendant correctly argues that the only instances of the word "independent" in the specification refer to devices "independent" of each other, not a "video feed" independent of a "communication channel." (Dkt. No. 177 at 12). However, Defendant acknowledges that the term "independent" appears in the prosecution history in the context discussed above. *Id.* at 13. According to Defendant, a POSITA would have understood the patentees' argument to mean that the video feed (television content) and channel cannot be independent, because they are already associated. *Id.* Defendant argues that this shows that "independent of" and "associated with" are mutually exclusive concepts, and the intrinsic record fails to explain how they can occur simultaneously. *Id.* at 13-14.

The Court disagrees with Defendant that the claim fails to inform those skilled in the art about the scope of the invention with reasonable certainty. However, the Court agrees that the claim could be confusing to a jury without the context provided by the intrinsic evidence. *Funai Elec. Co. v. Daewoo Elecs. Corp.*, 616 F.3d 1357, 1372 (Fed. Cir. 2010) ("An ungainly claim is not thereby indefinite, when its meaning can be understood by a person experienced in the field of the invention, on review of the patent documents."); *Nautilus Inc.*, 572 U.S. at 899 ("[The] definiteness requirement must take into account the inherent limitations of language."). Accordingly, the Court construes the term "being independent of" to provide further clarity, and resolve the parties' dispute.

Specifically, the specification teaches that the plurality of feeds are capable of being "associated with one or more communication channels," as illustrated in Figure 3.

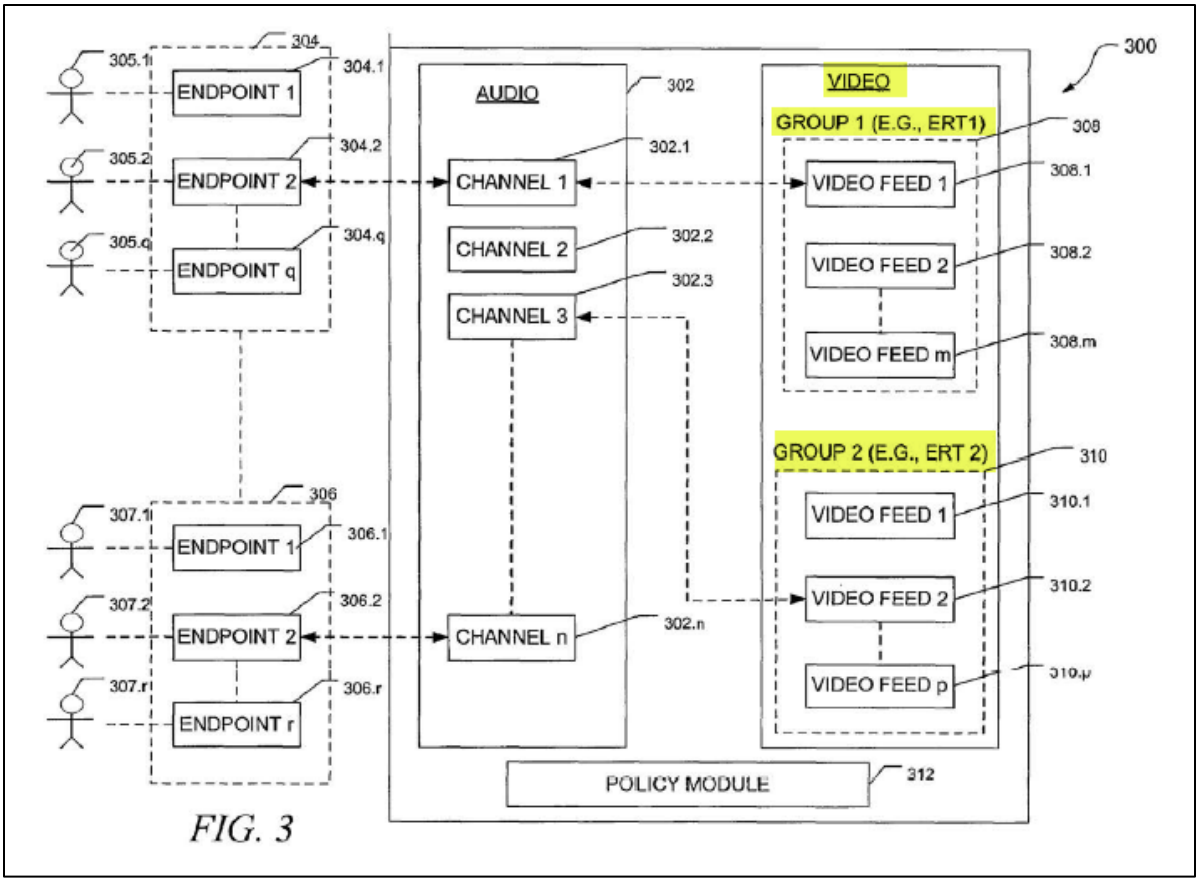

FIG. 3

'830 Patent at 5:26–27, Figure 3 (highlight added). In other words, "being independent of" means that the recited video feed is capable of being associated with more than just "the selected communication channel." Thus, the Court construes the phrase "the one or more video feeds being independent of the selected communication channel" to mean "the one or more video feeds being capable of being associated with more than the selected communication channel." Indeed, Claim 2 describes the use of a database to associate video feeds and communication devices. Accordingly, the Court finds that Defendant failed to prove by clear and convincing evidence that the phrase is indefinite. Finally, the Court considered the remaining extrinsic evidence submitted by the parties, and given it its proper weight in light of the intrinsic evidence.

2. Court's Construction

For the reasons set forth above, the Court construes the phrase **"the one or more video**

feeds being independent of the selected communication channel" to mean **"the one or more video feeds being capable of being associated with more than the selected communication channel."**

B. "video stream association module"

Disputed Term	Plaintiff's Proposal	Defendant's Proposal
"video stream association module"	Plain and ordinary meaning. This term is not subject to 35 U.S.C. §112 ¶6. Should the Court conclude that the term is subject to 35 U.S.C. §112 ¶6, Plaintiff proposes the following structures, acts, and materials that correspond to the element: 3:3-15, 21-36, 44-57; 4:1-9, 29-67; 5:23-67; 6:3-66; 7:4-59; 8:16-64; 9:1-59; 10:13-67; 11:1-45; Figs 1A-11 and equivalents thereof. Plaintiff agrees with Defendant's identification of function.	Subject to 35 U.S.C. § 112 ¶6 **Function:** monitoring a selection of a communication channel…, providing a plurality of radio frequencies on a display…, monitoring a selection of a radio frequency…, identifying at least one video feed…, providing access to the identified at least one video feed… **Structure:** "a variety of software applications and/or hardware that can monitor and process communications between the communication devices," as described at 3:46-49 and FIGs. 2-4, 8-9, 11 and associated text.

1. Analysis

The term "video stream association module" appears in Asserted Claim 15 of the '830 Patent. The Court finds that the term "video stream association module" is not subject to § 112 ¶ 6. Here, there is a rebuttable presumption that § 112, [¶] 6 does not apply because the claim does not recite the word "means." Therefore, the analysis proceeds in two steps. First, the Court must determine whether the term is in means-plus-function form pursuant to 35 U.S.C. § 112, ¶ 6. *See Robert Bosch, LLC v. Snap-On Inc.*, 769 F.3d 1094, 1097 (Fed. Cir. 2014). If the Court determines that the term recites a means-plus-function limitation, then the Court proceeds to the next step and attempts "to construe the disputed claim term by identifying the corresponding structure, material, or acts described in the specification to which the term will be limited." *Id.* (internal quotation

marks and citation omitted).

Starting with the first step, Defendant argues that Claim 15 of the '830 Patent recites a "video stream association module" with numerous functions without sufficiently definite structure for how that generic module can perform those functions. (Dkt. No. 232 at 6). The Court disagrees and finds that Defendant has conflated the steps in the § 112, ¶ 6, analysis. *Apple Inc. v. Motorola, Inc.*, 757 F.3d 1286, 1298-1299 (Fed. Cir. 2014) ("Requiring traditional physical structure in software limitations lacking the term means would result in all of these limitations being construed as means-plus-function limitations and subsequently being found indefinite."); *Zeroclick, LLC v. Apple Inc.*, 891 F.3d 1003, 1007-09 (Fed. Cir. 2018) (holding that the district court erred by effectively treating "program" and "user interface code" as nonce words and concluding in turn that the claims recited means-plus-function limitations.).

As noted in *Williamson*, the term "module" *can* operate as a substitute for "means," but that does not mean that it automatically substitutes for "means" in the context of § 112, ¶ 6 analysis. *Williamson v. Citrix Online, LLC*, 792 F.3d 1339, 1350 (Fed. Cir. 2015) ("'Module' is a well-known nonce word that *can* operate as a substitute for 'means' in the context of § 112, para. 6") (emphasis added). In other words, whether recitation of a "video stream association module" performing a function is governed by § 112, ¶ 6 depends on whether the claim recites the objectives and operation of the "video stream association module." *See, e.g., Dyfan, LLC v. Target Corp.*, 28 F.4th 1360, 1368 (Fed. Cir. 2022) ("[Expert] testified that persons of ordinary skill would have understood that the word 'code,' when coupled with language describing its operation, here connotes structure."); *Linear Tech. Corp. v. Impala Linear Corp.*, 379 F.3d 1311, 1319-21 (Fed. Cir. 2004) (finding that "circuit [for performing a function]" was sufficiently definite structure because the claim recited the "objectives and operations" of the circuit.).

Here, the Court finds that "module" does not substitute for "means," and that the claim connotes sufficiently definite structure in the context of § 112, ¶ 6. In contrast to the claims in *Williamson*, the claim language here does not describe broadly phrased high-level functions such as "receiving communications" or "coordinating the operation of the streaming data module." Instead, the claims recite that the video stream association module is "executed by the at least one processor to cause operations to be performed." Claim 15 then explicitly recites the operations performed by the "video stream association module" as follows:

> monitoring a selection of a communication channel by a user of a mobile communication device;
> providing a plurality of radio frequencies on a display of the mobile communication device, each radio frequency being associated with a geographical zone from which a plurality of video feeds associated with the geographic zone are sourced;
> monitoring a selection of a radio frequency of the plurality of radio frequencies by the user;
> identifying at least one video feed by selecting the at least one video feed from the plurality of video feeds associated with the geographic zone, wherein the at least one video feed is associated with the selected communication channel based on a user policy that identifies one or more video feeds that are relevant to the user when the user accesses the selected communication channel, the one or more video feeds being independent of the selected communication channel; and
> providing access to the identified at least one video feed to the mobile communication device based on the user policy.

'830 Patent at 13:56–14:9. This step-wise description of the operation of the "video stream association module" forms an algorithm, which connotes structure. *See St. Isidore Research, LLC v. Comerica Inc.*, No. 2:15-cv-1390-JRG-RSP, 2016 U.S. Dist. LEXIS 126866, at *41 (E.D. Tex. Sep. 18, 2016) ("The claim as a whole discloses a series of steps the module performs when it is in operation. That is, Claim 1 discloses an algorithm. . . . The algorithm connotes structure."). Thus, a POSITA would understand that the claim language recites sufficient structure, and that the term "video stream association module" is not used as a generic term or black box recitations of

structure or abstractions. *See, e.g.*, *Zeroclick, LLC v. Apple Inc.*, 891 F.3d 1003, 1008 (Fed. Cir. 2018) ("a person of ordinary skill in the art could reasonably discern from the claim language that the words 'program,' . . . and 'user interface code,' . . . are used not as generic terms or black box recitations of structure or abstractions, but rather as specific references to conventional graphical user interface programs or code, existing in prior art at the time of the inventions."); *Apple*, 757 F.3d at 1295, 1298-99, 1301 (Fed. Cir. 2014) (noting that structure for software "is understood through, for example, an outline of an algorithm, a flowchart, or a specific set of instructions or rules" and finding "heuristic [for performing a function]" to be sufficiently definite structure because the patent described the operation and objectives of the heuristic); *Collaborative Agreements, LLC v. Adobe Sys.*, No. 15-cv-03853-EMC, 2015 U.S. Dist. LEXIS 161809, at *11-*24 (N.D. Cal. Dec. 2, 2015) ("code segment [for performing a function]" found to be sufficiently definite structure because the claim described the operation of the code segment); *Finjan, Inc. v. Proofpoint, Inc.*, No. 13-cv-05808-HSG, 2015 U.S. Dist. LEXIS 162504, at *31-*32 (N.D. Cal. Dec. 3, 2015) ("processor [for performing a function]" found to be sufficiently definite structure because the claim described how the processor functions with the other claim components); *SuperSpeed, LLC v. Google, Inc.*, No. H-12-1688, 2014 U.S. Dist. LEXIS 4479, at *78-*79 (S.D. Tex. Jan. 14, 2014) ("code [for performing a function]" found to be sufficiently definite structure because the claim described the operation of the code within the invention).

The specification further supports this understanding of the claim language. The specification includes exemplary embodiments of video feed association module configured to associate one or more video feeds. For example, Figure 2 discloses an apparatus to associate video feeds:

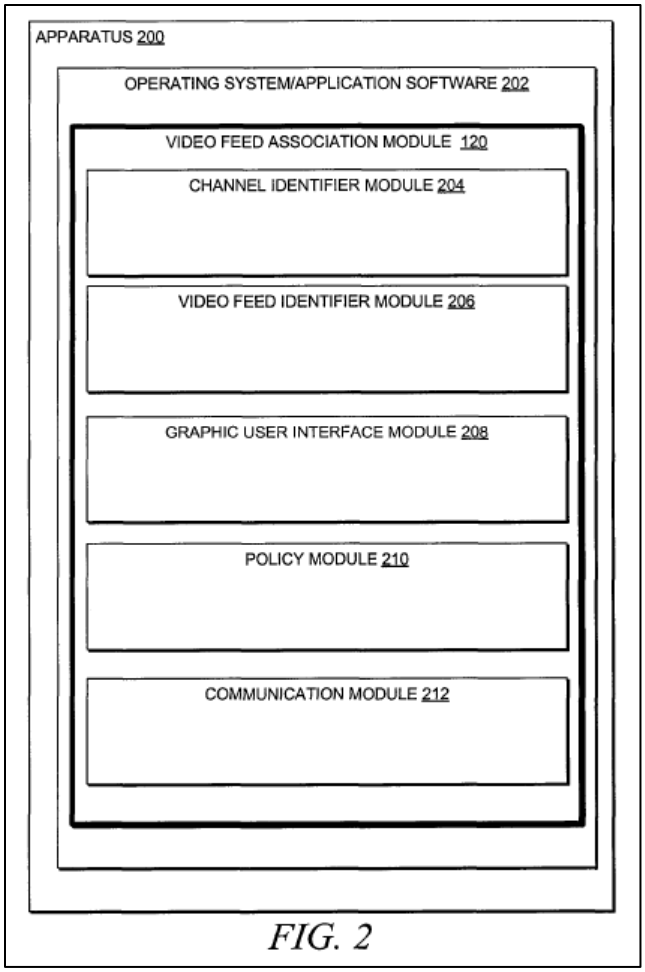

FIG. 2

'830 Patent at Figure 2. In this embodiment, the specification describes an apparatus associating video feeds with a communication channel, including "memory for storing and operating system and application software." *Id.* at 4:40–60. The specification further includes a schematic diagram of a system, wherein video feeds are associated with a communication channel.

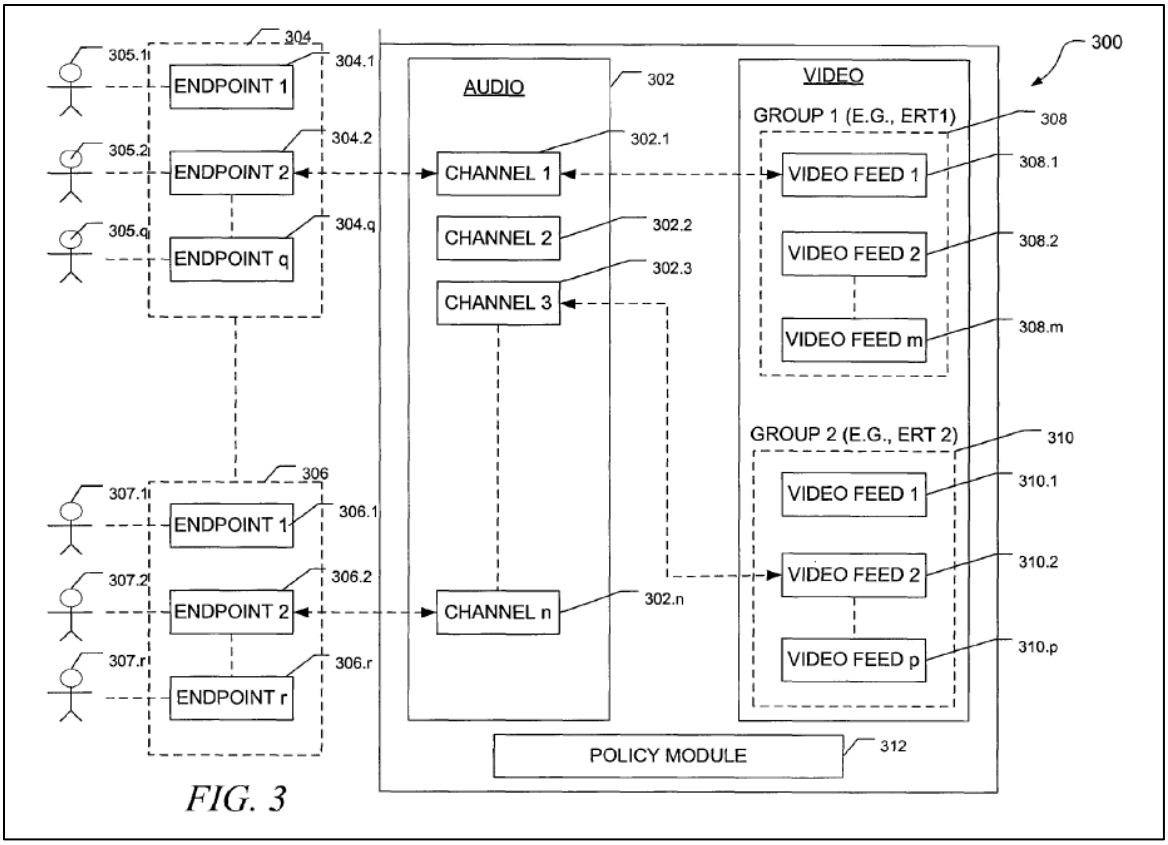

FIG. 3

Id. at Figure 3, 4:61–6:17. The specification also includes a flow diagram of association of video feeds with a communication channel.

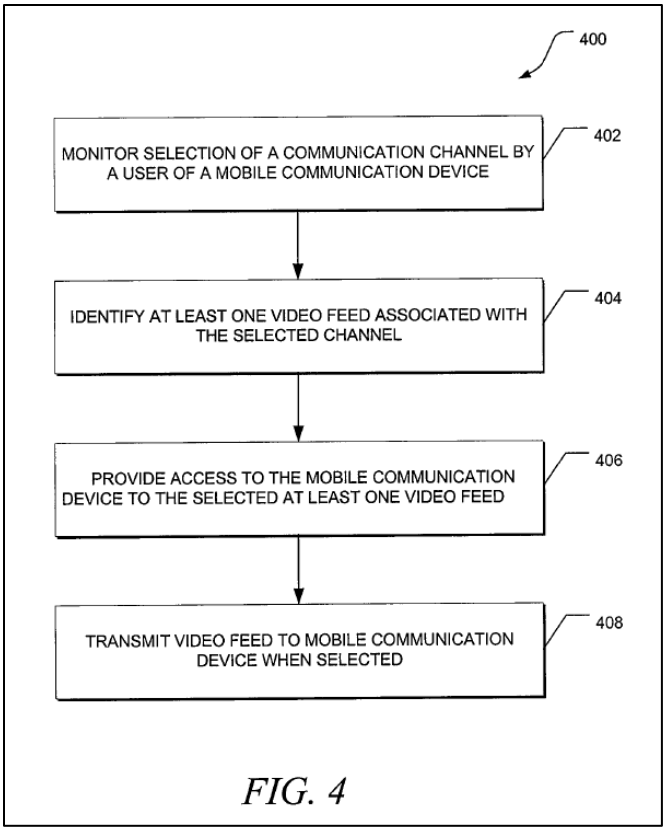

FIG. 4

Id. at Figure 4, 6:18–7:3. Similarly, the specification includes a flow diagram identifying channels with which to associate video feeds.

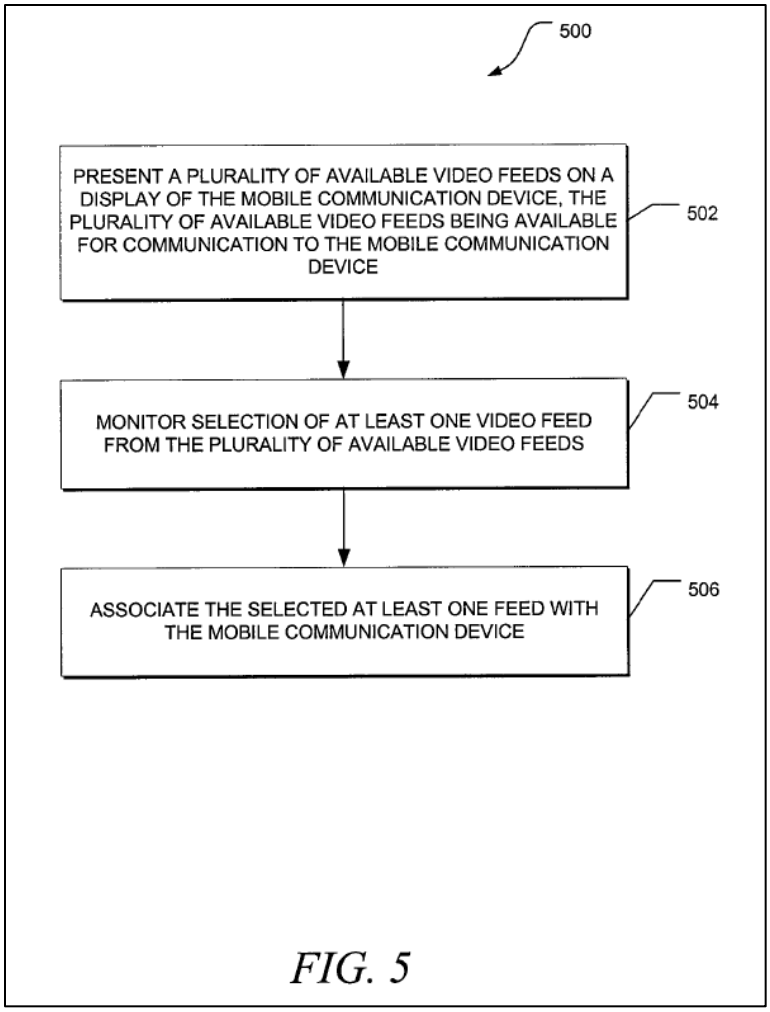

FIG. 5

Id. at Figure 5, 7:4–8:33. Likewise, the specification further discloses a description of the recited "providing" and "monitoring" steps as follows.

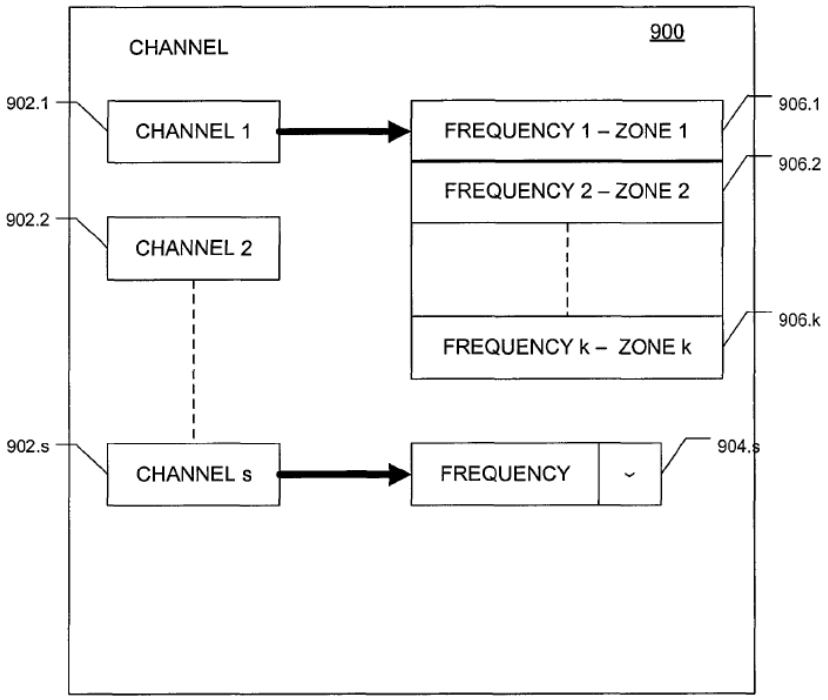

FIG. 9

Id. at Figure 9. The specification states that the user interface depicted in Figure 9 "include[s] a plurality of channel identifiers 902.1-902.s, each of which has an associated frequency drop down menu (see drop-down menu 904.s)." *Id.* at 9:63–10:2. "[W]hen a user selects a drop-down menu associated with the first channel 902.1, it is expanded to provide a plurality of available frequencies to which channel 1 may be tuned (see expanded drop-down menu 906)." *Id.* The specification further states that the "expanded drop-down menu 906" includes a "first frequency 906.1 associated with a first zone, a second frequency 906.2 associated with a second zone and so on." *Id.* at 10:3-5.

Finally, the specification discloses a computing system including a processor and memory, each including instructions.

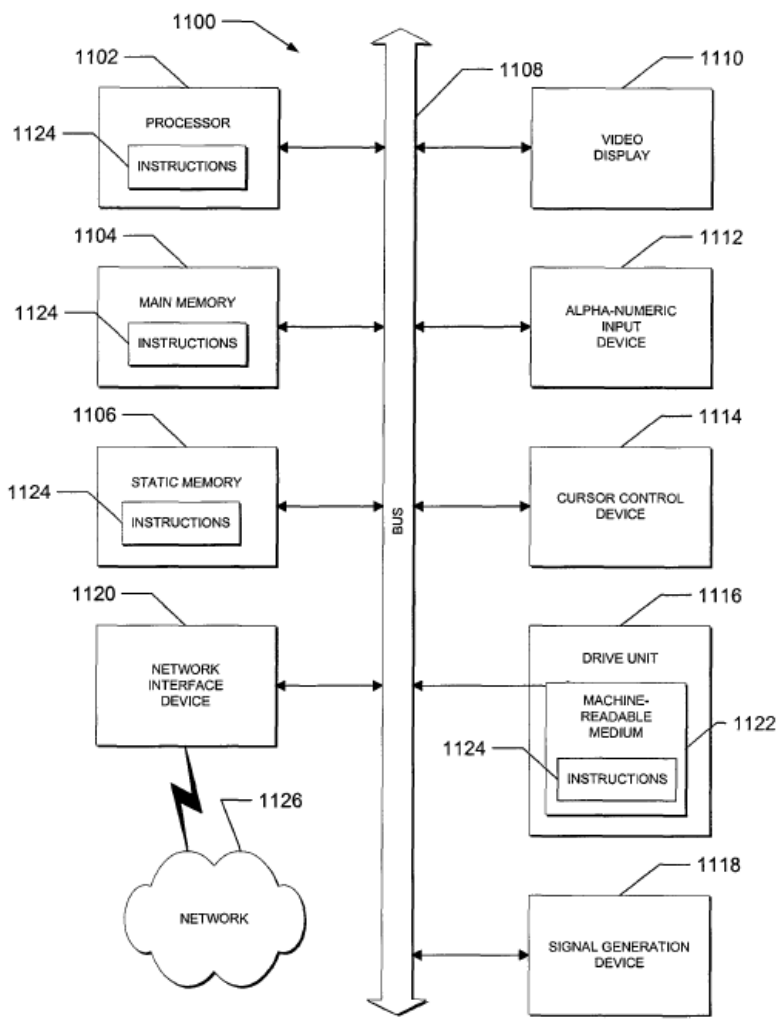

FIG. 11

Id. at Figure 11, 11:3–61. Thus, a POSITA would understand that the "video stream association module" recited in the claims, and described in the specification, would have sufficiently definite meaning as the name for a structure. *Apple Inc. v. Motorola, Inc.*, 757 F.3d 1286, 1298 (Fed. Cir. 2014) ("The correct inquiry, when 'means' is absent from a limitation, is whether the limitation, *read in light of the remaining claim language, specification, prosecution history, and relevant extrinsic evidence*, has sufficiently definite structure to a person of ordinary skill in the art.") (emphasis added). Indeed, Plaintiff's expert, Dr. Akl, opined that "[b]oth Claim 15 and the

specification further describe the physical connections and structural interactions of the processor, the memory, and the video stream association module, and the specification in particular details the objections and operations of the video stream association module in a way that connotes structure." (Dkt. No. 231-3 at ¶ 38) (citing '830 Patent at 3:3–8, 3:21–24 (Figure 1A), 3:30–33 (Figure 1B), 4:40–54 (Figure 2)). Accordingly, the Court concludes that the "video stream association module" limitation is not written in means-plus-function format because it connotes sufficiently definite structure to persons of ordinary skill in the art. *Dyfan, LLC v. Target Corp.*, 28 F.4th 1360, 1368 (Fed. Cir. 2022) ("In determining whether software limitations like those at issue here recite sufficient structure, we can look beyond the initial 'code' or 'application' term to the functional language to see if a person of ordinary skill would have understood the claim limitation as a whole to connote sufficiently definite structure.").

In summary, although the presumption against § 112 ¶ 6 is no longer "strong," it is still a presumption that Defendant must affirmatively overcome. In the context of this intrinsic record, the Court finds that Defendant has not shown that the term "video stream association module" should be subject to § 112 ¶ 6. Accordingly, the Court rejects Defendant's argument that the disputed term is a means-plus-function terms governed by § 112 ¶ 6. Therefore, the Court concludes that no further construction is required.

2. Court's Construction

For the reasons set forth above, the term **"video stream association module"** is not subject to § 112 ¶ 6, and will be given its plain and ordinary meaning.

C. "link for multicasting between users in the first domain and users in the second domain"

Disputed Term	Plaintiff's Proposal	Defendants' Proposal
"link for multicasting between users in the first domain and users in the second domain"	Plain and ordinary meaning.	"satellite link that simultaneously delivers information between a group of users in the first domain and a group of users in the second domain using the most efficient strategy"

1. Analysis

The phrase "link for multicasting between users in the first domain and users in the second domain" appears in Asserted Claim 8 of the '134 Patent. The parties first dispute whether the claimed "link" is a "satellite link." The parties also dispute whether the '134 Patent defines "multicast[ing]" as "refer[ring] to the delivery of information to a group of destinations simultaneously using the most efficient strategy."

The Court finds that the term "multicasting" is the only term that requires construction. To be sure, most of the identified language is not disputed, and is not complicated to understand. Regarding the term "link," the Court agrees with Defendant that the claim language itself recites that the "link" is a "satellite communication link." Specifically, the last element in Claim 8 recites "wherein the link is a satellite communication link." This claim language was added during prosecution, and was identified by the examiner as a reason for allowance:

> ***Reason for Allowance***
>
> 4. The following is a statement of reasons for the indication of allowable subject matter:
>
> 4.1. Regarding claims 1, 11, 16 and 21, all the following prior arts of record fail to teach the claimed subject matter relating to the following limitations: "increase the bandwidth level for the link based on a change in the application and based on an identification of additional presence data for additional users that have joined the communication session, wherein the communication resource managers each includes a respective trunking element that is automatically configured to select a transcoding based on available bandwidth; adjust the bandwidth level based on a determination which of the additional users and the users in the first and second domains can transmit data simultaneously during the communication session;" and "wherein the link is a satellite communication link".

Dkt. No. 177-5 at 7 (highlight added). The specification also discloses using a satellite communication link. *See, e.g.*, '134 Patent at 2:15, 2:41, Figures 1-3. Plaintiff argues that the ordinary meaning of "link for multicasting" is not "satellite link." (Dkt. No. 159 at 19). However, the claim language explicitly recites that the "link" is a "satellite communication link." To the extent that Plaintiff contends that the "link" is not a "satellite communication link," the Court rejects that argument.

Regarding the term "multicasting," the Court agrees that the patentees explicitly defined the term "multicasting" in the specification. The specification states that "'Multicast' refers to the delivery of information to a group of destinations simultaneously using the most efficient

strategy." '134 Patent at 1:14–16. The specification further indicates that "the most efficient strategy" is one that requires the source to send a packet only once. *Id.* at 1:23–26 ("Multicast utilizes network infrastructure efficiently by requiring the source *to send a packet only once*, even if it needs to be delivered to a large number of receivers.") (emphasis added).

Plaintiff argues that "multicasting simply means sending *one message* to many recipients." (Dkt. No. 159 at 19) (emphasis added). Plaintiff further contends that the additional requirements that information be delivered "simultaneously," and that it be delivered "using the most efficient strategy" is improper. According to Plaintiff, the specification proactively addresses the patentees' concern that explanations of multicasting presented as background might be read into the claims. (*Id.* at 20) (citing '134 Patent, 2:31–40). Plaintiff contends that Defendant "seeks to import into the claim the requirement that STA Group prove that information is delivered 'simultaneously,' and engage in a dispute about a platonic ideal of efficiency." (Dkt. No. 159 at 20).

To resolve the parties' dispute, the Court's construction clarifies "efficiency" as "requiring a source to send a packet only once," which Plaintiff contends is the plain and ordinary meaning of "multicasting." (Dkt. No. 159 at 19) ("[M]ulticasting simply means sending *one message* to many recipients.") (emphasis added). Likewise, requiring the source to send a packet only once also defines the "simultaneously" requirement. The Court agrees that "simultaneously," or Defendant's interpretation of the term could be problematic. Accordingly, the Court finds that "simultaneously" is satisfied when the source sends the packet once. To the extent that Defendant argues otherwise, the Court rejects that argument.

2. Court's Construction

For the reasons set forth above, the Court construes the term **"multicasting"** to mean **"delivering information to a group of destinations by requiring a source to send a packet**

only once."

D. "trunking element"

Disputed Term	Plaintiff's Proposal	Defendants' Proposal
"trunking element"	Plain and ordinary meaning.	"software and/or hardware in the communication resource manager that establishes, tears down, and controls the bandwidth of the satellite link"

1. Analysis

The term "trunking element" appears in Asserted Claim 8 of the '134 Patent. The parties dispute whether the term "trunking element" requires construction. Contrary to Defendant's contention, there is nothing in Claim 8 that requires the trunking element by itself to establish, tear down, or control the bandwidth of the satellite link. Instead, the claim indicates that these method steps may be performed by the communication resource manager, that includes a "trunking element." Specifically, Claim 8 recites the following:

> 8. A method to be executed in conjunction with a processor to perform the steps of, comprising:
> interacting, via *a first communication resource manager* located in a first domain, with *a second communication resource manager* located in a second domain;
> determining to establish a link for multicasting between users in the first domain and users in the second domain based on presence data of at least one user in the first domain and at least one user in the second domain;
> determining an application to be used in a communication session over the link;
> allocating a bandwidth level to be used for the link to accommodate the application;
> increasing the bandwidth level for the link based on a change in the application and based on an identification of additional presence data for additional users that have joined the communication session, wherein *the communication resource managers* each includes respective *trunking element* that is automatically configured to select a transcoding based on available bandwidth;
> adjusting the bandwidth level based on a determination which of the additional users and the users in the first and second domains

can transmit data simultaneously during the communication session;

detecting an absence of active users in the first domain and the second domain; and

tearing down the link based on the absence; wherein the link is a satellite communication link.

As recited in the claim, the only requirement for the "trunking element" is that it is part of the recited communication resource manager, and that it is "automatically configured to select a transcoding based on available bandwidth." This is consistent with the specification that describes an embodiment where "dynamic trunking elements 50 and 52 (in cooperation with the endpoints) automatically configure the system to select transcoding based on the available bandwidth." '134 Patent at 4:25–28. The specification further discloses that the "trunking element 50, 52" is included in the "communication resource manager 44, 46," as illustrated in Figures 1 and 2.

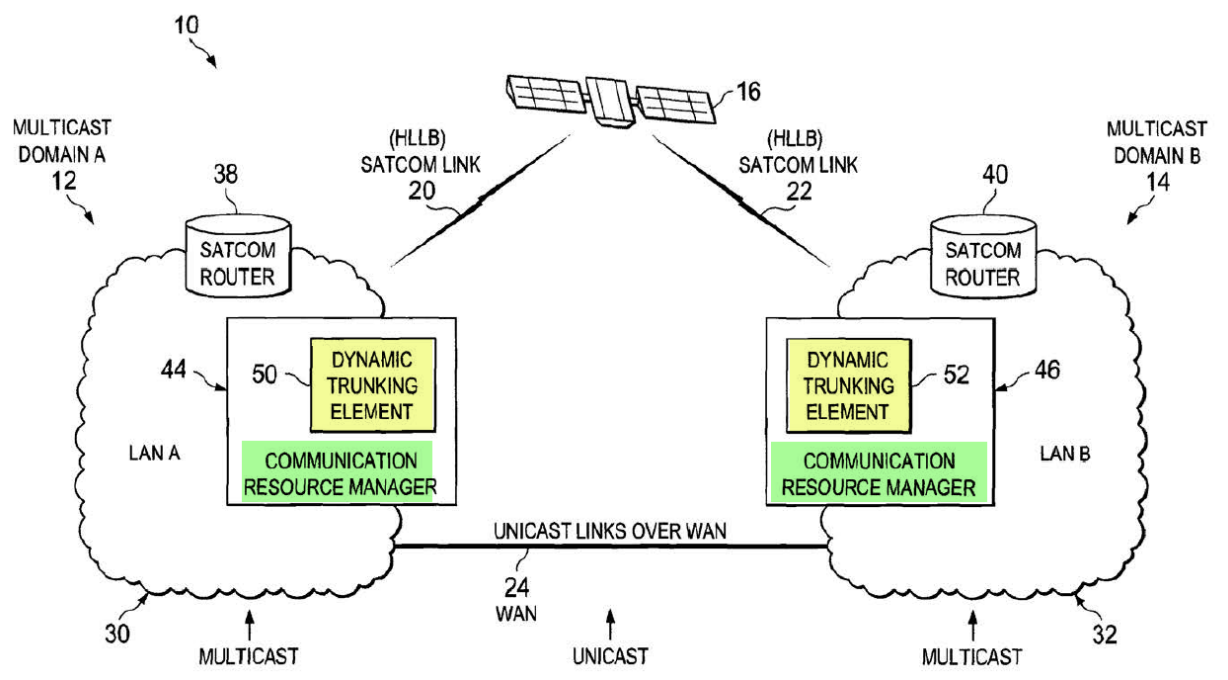

FIG. 1

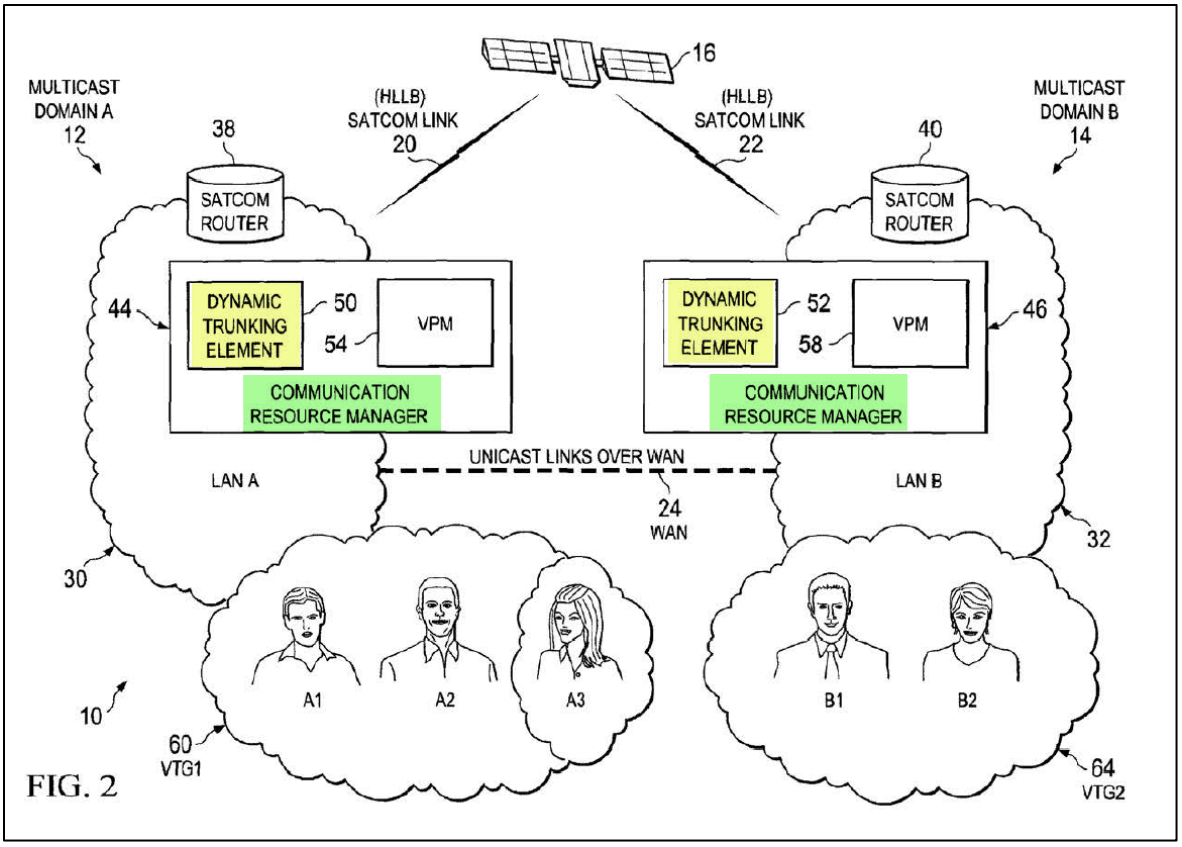

FIG. 2

’134 Patent at Figures 1 and 2 (highlight added). The specification further states that in one embodiment, it is the communication resource manager that monitors and tears down the satellite link.

> Communication resource managers 44 and 46 continuously monitor their respective domains for the presence of users (users logging in and out of the system). When the remote communication resource manager (44 or 46) detects that a user has logged into the system, it checks the state of the system. If the system state indicates that the new user does not need to be in a multi-site VTG, or if the system determines that the SatCom already exists for the multi-site VTG, the operation continues unaltered.
>
> However if a new user logs into the system when it is in the “Link down due to no local user presence” state, the system brings up the link (e.g., a SatCom link). As soon as the SatCom link is up, communication is established between communication resource managers 44 and 46 in order to determine if users are present on both sides of the link. The operation continues as described above. Once the SatCom link is brought up, it is kept up as long as the VTG is active and communication resource managers 44 and 46 (on both sides) of the link detect that users are present in both locations. Once

> communication resource managers 44 and 46 on either side detect that they have no users present in a given multi-location VTG, they communicate the state to the remote entity and tear down the SatCom link.

Id. at 3:57–4:12. Accordingly, the Court finds that the term should be given its plain and ordinary meaning. See *Atlas IP, LLC v. Medtronic, Inc.*, 809 F.3d 599, 605 (Fed. Cir. 2015) ("When construing claim terms, '[w]e generally give words of a claim their ordinary meaning in the context of the claim and the whole patent document.'") (*citing World Class Technology Corp. v. Ormco Corp.*, 769 F.3d 1120, 1123 (Fed. Cir. 2014)).

Regarding Defendant's construction, the Court rejects it because it improperly imports limitations into the term "trunking element." First, Defendant's construction redrafts Claim 8 by requiring the trunking element to exclusively establish, tear down, and control the bandwidth of the satellite link. As discussed above, the claim recites that these method steps are performed by the communication resource manager, which includes, but is not limited to the "trunking element." *K-2 Corp. v. Salomon SA*, 191 F.3d 1356, 1364 (Fed. Cir. 1999) ("Courts do not rewrite claims; instead, we give effect to the terms chosen by the patentee."). Indeed, the specification states that "[d]ynamic trunking elements 50 and 52 *can assist* in this coordination and empower communication resource managers 44 and 46 to give intelligent instructions to routers 70 and 72." '134 Patent at 5:47–50 (emphasis added).

Defendant correctly argues that the specification discloses an embodiment where "dynamic trunking elements 50 and 52" "bring up the SatCom link" and "increase the bandwidth of the link." (Dkt. No. 177 at 25-26) (citing '134 Patent at 4:33–49). However, this is just one embodiment, and Defendant did not provide a persuasive reason to limit the broader claim language. *Liebel-Flarsheim Co. v. Medrad, Inc.*, 358 F.3d 898, 913 (Fed. Cir. 2004) ("[I]t is improper to read limitations from a preferred embodiment described in the specification—even if it is the only

embodiment—into the claims absent a clear indication in the intrinsic record that the patentee intended the claims to be so limited.”).

Defendant further argues that the extrinsic evidence also confirms its construction reflects the plain and ordinary meaning of “trunking.” (Dkt. No. 177 at 26) (citing Dkt. No. 177-6, U.S. Patent No. 7,836,183 at 2:1-9; Dkt. No. 177-7, IEEE Journal on Selected Areas in Communications, Vol. 22, No. 7 (Nov. 2004) at 3; Dkt. No. 177-8, Comparisons of Conventional and Trunked Systems, May 1999, at 14-15). The extrinsic evidence cited by Defendant simply confirms that in one embodiment the “trunking element” may perform all of the steps required by its construction. However, Claim 8 is not limited to this embodiment, and it would be improper to redraft the claims based strictly on this extrinsic evidence. *Phillips*, 415 F.3d at 1321 (“[H]eavy reliance on the dictionary divorced from the intrinsic evidence risks transforming the meaning of the claim term to the artisan into the meaning of the term in the abstract, out of its particular context, which is the specification.”).

The remainder of Defendant’s construction is recited in the claims and is unnecessary. As discussed above, Claim 8 specifically recites that “the communication resource managers each includes respective trunking element.” Thus, it would be repetitive and potentially confusing to repeat it in a construction. Furthermore, the parties agree that the “communication resource manager” includes “software and/or hardware,” and Claim 8 recites that the “communication resource managers” include a “respective trunking element.” To the extent that Plaintiff argues that the “trunking element” is not “software and/or hardware,” the Court rejects that argument.

Finally, Defendant argues that if its construction is rejected, then it would read “trunking” out of the claim completely. (Dkt. No. 177 at 27). According to Defendant, this would leave a purely functional “element” term that should be construed under § 112 ¶ 6, and limited to the

corresponding structure in the specification. The Court disagrees and rejects Defendant's argument that if the Court does not adopt its construction, then the Court must find that the term is subject to § 112 ¶ 6, and limit the term to a disclosed algorithm in the specification.

Defendant failed to show that the term is subject to § 112 ¶ 6. Although the presumption against § 112 ¶ 6 is no longer "strong," it is still a presumption that Defendant must affirmatively overcome. In the context of this intrinsic record, the Court finds that Defendant has not shown that the term "trunking element" should be subject to § 112 ¶ 6. Accordingly, the Court rejects Defendant's argument that the disputed term is means-plus-function terms governed by § 112 ¶ 6.

2. Court's Construction

For the reasons set forth above, the term **"trunking element"** is given its **plain and ordinary meaning.**

E. "media stream[s]"

Disputed Term	Plaintiff's Proposal	Defendants' Proposal
"media stream[s]"	Plain and ordinary meaning.	"a continuous sequence of audio or audio-and-video, which may include associated data, through a network"

1. Analysis

The term "media stream[s]" appears in Asserted Claims 1-3, and 5 of the '664 Patent. The Court finds that the term is used consistently in the claims and is intended to have the same general meaning in each claim. The parties dispute whether the "media stream" must be limited to a continuous sequence, as Defendant proposes. Defendant's original construction included the requirements of "audio or audio-and-video." Plaintiff argued that Defendant's construction excluded all media that does not include audio. (Dkt. No. 159 at 27). Defendant responded by agreeing to a revised construction of "audio or video or both." (Dkt. No. 177 at 30-31).

Defendant's original construction also included the requirements of "through a network."

Plaintiff argued that the patentees did not explicitly recite these features in the claim. Defendant responded that the "through a network" language is not critical to resolving the parties' dispute. (Dkt. No. 177 at 31). Plaintiff did not address the "which may include associated data" language. Thus, the Court finds that these issues no longer need to be resolved by the Court. Therefore, the only issue to resolve is whether the "media stream" must be limited to "a continuous sequence," as Defendant contends.[3]

Defendant argues that its construction "embraces verbatim the definition from the Microsoft Computer Dictionary, 4th Edition (1999)." (Dkt. No. 177 at 29-30) (citing Dkt. No. 177-9 at 4). According to Defendant, this extrinsic dictionary definition of "media stream" accords with the intrinsic evidence. (Dkt. No. 177 at 30) (citing '664 Patent at 1:38–41, 3:30–4:9). Defendant further argues that Plaintiff does not explain how a "randomized or scrambled collection" of audio or video would stay true to the plain meaning of "media stream." (Dkt. No. 177 at 31). Defendant contends that the essence of the alleged invention is to make the media stream quickly detectable to an emergency responder, and thus, it would be undecipherable if it were provided non-continuously. *Id.*

Plaintiff argues that the phrase "continuous sequence" implies a set of data provided in a particular order without interruption. (Dkt. No. 159 at 28). Plaintiff further contends that a POSITA would not interpret the claims to include "randomized or scrambled" media. (Dkt. No. 181 at 12). To the extent that Plaintiff argues that the claims include "randomized or scrambled" media, the Court rejects that argument.

Claim 1 recites "monitoring media streams associated with channels in a communication

[3] During the claim construction hearing, Defendant stated that it had no problem with "continuous" being removed from the construction.

environment." The intrinsic evidence indicates that the transfer of the media streams may be done using packets. For example, dependent Claim 8 recites "wherein the alert is received in a header of a packet of the media stream," and dependent Claim 9 recites "wherein the alert is received in a control packet of the media stream." Likewise, the specification states that "[f]or the out-of-band signaling, the identification of the alert is provided in the header of a packet, in the payload of the packet, in control packets, or in any other suitable location." '664 Patent at 4:14–20.

Defendant's construction appears to exclude "media streams" that are divided into packets, which would contradict the intrinsic evidence. Thus, Defendant's dictionary definition, or Defendant's interpretation of this dictionary definition is improper, because it contradicts the intrinsic evidence. Accordingly, the Court rejects Defendant's construction and finds that the term "media stream[s]" should be construed to mean "audio or video or both, which may include associated data."

2. Court's Construction

For the reasons set forth above, the Court construes the term **"media stream[s]"** to mean **"audio or video or both, which may include associated data."**

F. "channels"

Disputed Term	Plaintiff's Proposal	Defendants' Proposal
"channels"	Plain and ordinary meaning.	"two or more paths of differing priority

1. Analysis

The word "channels" appears in Asserted Claim 1 of the '664 Patent. The parties dispute whether the "channels" must have "differing priorities," as Defendant contends. The specification focuses on a management element (*i.e.*, management center 38) that can set different priorities or

"elevate" channels it is monitoring.

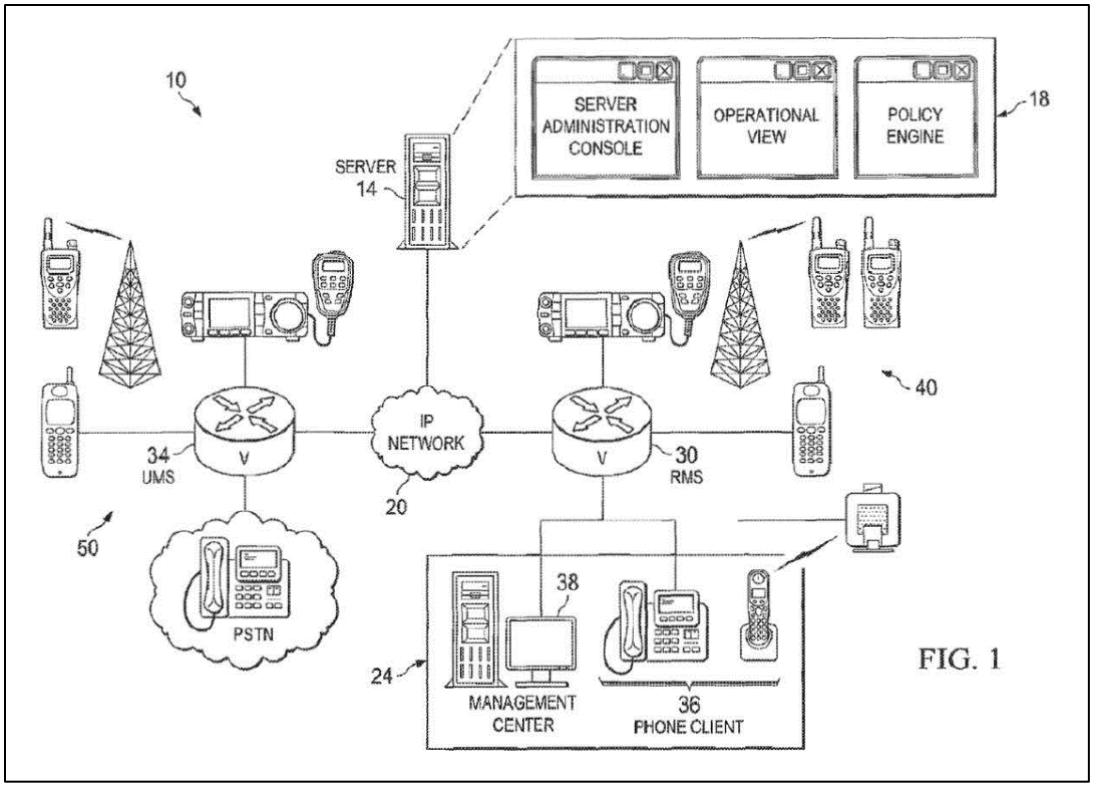

'664 Patent at Figure 1. Claim 1 is a very broad method claim that does not recite the "management element," versus Claim 16 that recites a "management element." In other words, the "differing priority" limitation would be properly included in the management element. Thus, Defendant is correct that the specification discloses channels with different priorities, but the requirement that these priorities are elevated by a "management element" is not recited in Claim 1.

Defendant argues that the invention involves "a plurality of channels, where important channels are rendered to one ear (e.g., the right) and the less important channels are sent to the other ear (e.g., the left)." (Dkt. No. 177 at 32) (citing '664 Patent at 3:21–24, Figure 2). Defendant contends that "important" and "less important" are coterminous with different priorities. (Dkt. No. 177 at 32) (citing '664 Patent at 3:50–55). Defendant argues that the essence of the invention is transmitting a priority message on a priority channel instead of a non-priority channel. (Dkt.

No.177 at 32) (citing ’664 Patent at 4:1–5).

Defendant further argues that the patentee specifically claimed a process where one channel has a different priority than the other “such that an adjustment is made to how the media stream is provisioned to an endpoint.” (Dkt. No. 177 at 32-33). Defendant contends that Plaintiff does not explain how “an adjustment” would be made to provision the media stream to its endpoint if no channel had a higher priority than another. *Id.* at 32.

Plaintiff argues that the specification describes communication systems that support a plurality of channels, and explains that conventionally channels are statically configured. (Dkt. No. 181 at 13). Plaintiff contends that the specification describes an example system where channels that are more important to a user may be rendered to one ear or set at a certain volume, and less important channels may be rendered to a different ear or set to a different volume. (Dkt. No. 159 at 29) (citing ’664 Patent at 3:21–24, 3:49–55). Plaintiff argues that when the patentees meant to describe channels of differing priority, they used additional words indicative of differing priority, such as “priority” or “importance.” (Dkt. No. 159 at 29).

The Court agrees that when the patentees intended to require “differing priorities,” they explicitly recited it in the claims. Claim 1 recites “elevating a priority associated with the media stream receiving the alert, such that an adjustment is made to how the media stream is provisioned to an endpoint in the communication environment.” As recited, the “priority” is associated with the “media stream,” and is not necessarily a channel priority. The dependent claims further recite ways of “elevating the priority” associated with the media stream. For example, dependent Claim 2 recites, “wherein elevating the priority comprises increasing the volume of the media stream receiving the alert.” Dependent Claim 3 recites, “wherein elevating the priority comprises changing a spatial direction [e.g., left ear or right ear] for rendering the media stream receiving the

alert." Both of these can be accomplished without reading in a "differing priority" limitation into the term "channels." In contrast, dependent Claim 6 recites, "wherein elevating the priority includes identifying *a primary channel* and rendering the alert message to *the primary channel*." Thus, dependent Claim 6 requires the channels to have "differing priorities." This indicates that a "priority" limitation should not be read into the independent claim via the term "channel."

Regarding the construction of "channels," the Court finds that the term should be given its plain and ordinary meaning. Claim 1 recites that the channels are "in a communication environment." The intrinsic evidence indicates the channels are paths for "exchange of data or information" in this communication environment. '644 Patent at 4:55–56, *see also id.* at 7:46–48 ("This may include simple conversational exchanges and/or simple correspondence between two end users operating their endpoints."). Accordingly, the Court finds that the intrinsic evidence indicates that the term should be given its plain and ordinary meaning, which a POSITA would understand includes a path for exchanging information.

2. Court's Construction

For the reasons set forth above, the term **"channels"** is given its **plain and ordinary meaning.**

VI. CONCLUSION

The Court adopts the constructions above for the disputed terms of the Asserted Patents. Furthermore, the parties should ensure that all testimony that relates to the terms addressed in this Order is constrained by the Court's reasoning. However, in the presence of the jury the parties should not expressly or implicitly refer to each other's claim construction positions and should not expressly refer to any portion of this Order that is not an actual construction adopted by the Court. The references to the claim construction process should be limited to informing the jury of the

constructions adopted by the Court.

SIGNED this 3rd day of June, 2024.

ROY S. PAYNE
UNITED STATES MAGISTRATE JUDGE