DARMSTADT
UNIVERSITY OF
TECHNOLOGY

2001 PAL®

# PROGRESS IN AUTOMOBILE LIGHTING

## Laboratory of Lighting Technology

## September 25-26, 2001

MOSAIC NICHE BY ALBIN MÜLLER AT MATHILDENHÖHE, DARMSTADT

PCNA Ex. 1020
U.S. Patent No. 9,955,551

dedicated to

**Mr. Val Roper**

2001 PAL®

**P**rogress in **A**utomobile **L**ighting

# Proceedings of the Symposium

Darmstadt University of Technology
Laboratory of Lighting Technology

Published by

**Prof. Dr.-Ing. H.-J. Schmidt-Clausen**

in the Series

**Darmstädter Lichttechnik**

Herbert Utz Verlag Wissenschaft

München

ISBN 3-89675-971-X

PAL '01: 2 Volumes, Vol. 8 & Vol. 9; not to be sold separately

Die Deutsche Bibliothek – CIP-Einheitsaufnahme
Ein Titeldatensatz für diese Publikation ist
bei Der Deutschen Bibliothek erhältlich

ISBN 3-89675-971-X

Das Werk ist urheberrechtlich geschützt. Die dadurch begründeten Rechte, insbesondere die der Übersetzung, des Nachdrucks, der Entnahme von Abbildungen, der Funksendung, der Wiedergabe auf photomechanischem oder ähnlichem Wege und der Speicherung in Datenverarbeitungsanlagen bleiben, auch bei nur auszugsweiser Verwertung, vorbehalten.

Die Wiedergabe von Gebrauchsnamen, Handelsnamen, Warenbezeichnungen usw. in diesem Werk berechtigt auch ohne besondere Kennzeichnung nicht zu der Annahme, daß solche Namen in Sinne der Warenzeichen- und Markenschutz-Gesetzgebung als frei zu betrachten wären und daher von jedermann benutzt werden dürften.

Copyright © 2001 Herbert Utz Verlag GmbH

Herbert Utz Verlag GmbH, München
Tel.: 089-277791-00
Fax: 089-277791-01
utz@utzverlag.de
www.utzverlag.de

**Content** **page**

**Werner Adrian: University of Waterloo, Canada**
Visual Acuity and its Dependency on Observation Time and Contrast 1

**Yukio Akashi: Lighting Research Center, USA**
The effect of oncoming headlight glare on peripheral detection under a mesopic light level 9

**Daniel Armbruster: F. Porsche AG, Germany**
Motor vehicle signal lamps in a fog environment 23

**Gerd Bahnmüller: Automotive Lighting Reutlingen GmbH, Germany**
Headlamp Development - Reduced Time to Market 28

**Gerhard Bierleutgeb: Hella KG Hueck & Co., Germany**
Interior Lighting Control (ILC) System Aspects for a New Approach 35

**Werner D. Bockelmann: Ophthalmologist, Germany**
Coloured head-down displays (HDD) from the point of view of information transfer 43

**Doris Boebel, Automotive Lighting, Germany**
Signal Image in PES Systems 49

**Christian Boehlau: Hella KG Hueck & Co., Germany**
Optical Sensors for AFS – Supplement and Alternative to GPS 56

**Gary Brown: Mira, UK**
Integrating Pedestrian Impact Protection into Future Headlight Design 61

**Berthold Büdel: Audi AG, Germany**
Clear lenses for lighting components – The actual trend and its problems 74

**John D. Bullough: Rensselaer Polytechnic Institute, USA**
Forward Vehicular Lighting and Inclement Weather Conditions 79

**Michael Burg: Hella KG Hueck & Co, Germany**
Infrared Headlamps for Active Night-Vision Systems 90

**Tso-Wei Chang: Lunghwa Institute of Technology, Taiwan**
Driving Performance Analysis on Interactions among Factors of Center High Mounted Stop Lamp and Road Environment 99

**Christophe Chenevier: Valeo Lighting Systems, France**
Thermal Simulation in Lighting Systems – 5 Days / 5 Degrees 109

**Andreas Chudaska: Hella KG Hueck & Co., Germany**
Headlamp Cleaning Systems – Trends of Development and Future Demands 119

**Sharon Cook: Loughborough University, UK**
Warning beacon intensity 127

Content page

**Francesco Cortese: St Filippo Neri's Hospital, Italy**
Biological and Statistical Profile of Road Accidents Victims in an Urban Area
A One-Year Experience in a Major Hospital 138

**Thomas Dahlem: Volkswagen AG, Germany**
Physiological Investigation of the Proportioning of Headlamp Illumination 155

**Maria Teresa Dalmasso: Automotive Lighting, Italy**
Signal LAMPs with hidden light sources 164

**Joachim Damasky: Hella KG Hueck & Co., Germany**
Trends in Auxiliary Car Lighting and the Influence on OE Development 173

**Ad de Visser: Philips Lighting B.V., The Netherlands**
Activities of CIE relevant to automotive lighting 186

**Detlef Decker: Hella KG Hueck & Co., Germany**
Aspects of dynamic light control in automotive applications 196

**Christophe Dubosc: Valeo Lighting Systems, France**
Lighting Systems and Show Cars 206

**Alexis Dubrovin: Valeo Lighting Systems, France**
Optimised Lighting Systems Architecture 224

**Martin Enders: BMW Group, Germany**
Pixel Light 234

**Jürgen Ewald: Nippon Carbide Industries B. V., The Netherlands**
Visual Performance of Fluorescent Retroreflective Sheeting 240

**Frank Ewerhart: Robert Bosch GmbH, Germany**
Video Based Curve Light System – Sensor, System and Results 252

**Matthias Fiegler: OSRAM GmbH, Germany**
PLANON, a mercury-free flat panel light source, with high potential
for automotive applications 266

**Michael J. Flannagan: The University of Michigan, USA**
Feasibility of Developing a Headlighting Rating System 275

**Helmut Frank: Mechatronic, Germany**
New Aspects for the Photometric Characterisation
of Microprismatic Retroreflective Sheeting 283

**Gianpiero Fusco: Automotive Lighting, Italy**
Headlamps Beam Patterns Evaluation by CCD Camera 309

**Takashi Futami: Stanley Electric Co.,Ltd., Japan**
Development of the "Gatling Beam" Headlamps 316

**Content** **page**

**Reiner Gödecker: Hella KG Hueck & Co, Germany**
Hella introduces MOLIS® -
the world's first ‚free design' modular lighting system 330

**Martin Grimm: Hella KG Hueck & Co., Germany**
Improved Nighttime Visibility for Drivers through Dynamic Bend Lighting 339

**Martin Grimm: Hella KG Hueck & Co., Germany**
ECE Headlamp Performance Status and Potential for Improvement 348

**Helmut Haf: IHH Ingenieurdienstleistungen, Germany**
SensorLEDIHH – Dual Operational Systemblock to Measure Perceived
Brightness and to Simultaneous Adaptive Signal Image Display 355

**Michael Hamm: Automotive Lighting, Germany**
System Strategies for Adaptive Lighting Systems 368

**Michael Hamm: Automotive Lighting, Germany**
Headlamp Performance Specification:
A Summary of New and Comprehensive Evaluation Methods 381

**Takahiro Hara: University Yoto, Japan**
Evaluation of AFS from driver's point of view 397

**Wolfgang Hendrischk: Hella KG Hueck & Co, Germany**
From Xenon, BiXenon to Vario Xenon 403

**Henning Hogrefe: Automotive Lighting Reutlingen GmbH, Germany**
Headlamp Design with New Double Filament Bulbs 414

**Shao Hong: Fudan University, China**
The Investigation on Chinese Visual Perception 422

**Rainer Huber: OSRAM Opto Seminconductors, Germany**
Flexible SMT LED Submodules 441

**George Iatan: DBM Reflex Entreprises Inc., Canada**
Simulation software for complex reflectors 447

**S.E. Jenkins, Optical and Photometric Technology Pty Ltd, Australia**
Use and Measurement of LED Clusters for Signals 454

**Norbert L. Johnson: 3M Company, U.S.A.**
A comparison of Retroreflective Sign Performance in Europe and
the United States based on Market Weighted Headlight Data 461

**Josef Kalze: Hella KG Hueck & Co., Germany**
Situation Adapted Light Distributions for AFS-Headlamps 474

**Hiroyuki Kanai: Shinshu University, Japan**
Proposition of Road Visual Environment Simulator for Evaluation
Visibility of Driver 485

Content page

**Takeshi Kimura: Koito Manufacturing Co. Ltd, Japan**
Japan's Plan for Introducing ECE Regulations Into Japanese Safety Regulations 503

**Nils Knollmann: Audi AG, Germany**
Interior lighting concept on the basis of psychological and physiological influences on night-time driving 508

**Thomas Knoop: LichtVision GmbH, Germany**
Digital Light Measurement for Automobile Applications 520

**Shoji Kobayashi: Koito Manufacturing Co. Ltd., Japan**
Next Generation Lane Indication/Recognition System, Study of Phase II 522

**Toshiyuki Kondo: Stanley Electric Co. Ltd., Japan**
Developing Highly Efficient LED Combination Rear Lamps 546

**Prasad Koppolu: Visteon Corporation, U.S.A.**
Knowledge-Based Engineering Application for Lighting Design and Development – KBE-SmartLite 560

**Harald Küster: Alanod Aluminium-Veredlung GmbH & Co. KG, Germany**
Large Area Coating of Aluminium Coils for Automotive Applications 577

**Peter Lehnert: BMW Technik GmbH, Germany**
Disability and Discomfort Glare under dynamic Conditions – The Effect of Glare Stimuli on the Human Vision 582

**Yandan Lin: Fudan University, China**
Visual Performance at Mesopic Light Levels 593

**Thomas Luce: Philips Automotive Lighting, Germany**
Optimized Light Source for High Incoupling Efficiencies in Distributive Lighting Systems (DLS) 599

**Peter Ludwig, Delphi Automotive Systems, Germany**
Wiring Integrated Illumination 612

**Karl Manz: Lichttechnisches Institut der Universität Karlsruhe, Germany**
The Influence by Size of Headlamp on Discomfort Glare 618

**Karl Manz: Lichttechnisches Institut der Universität Karlsruhe, Germany**
Tolerances of Cut-Off-Measurements 635

**Janusz Mazur: Warsaw University of Technology, Poland**
Computer Visualisation into Effect of Lighting Road by Car Projector with Using Programs from Group CAD 646

**Stefan Milch: smart microwave sensors GmbH, Germany**
Pedestrian Detection with Radar and Computer Vision 657

**Content** **page**

**Wolfgang Möhl: SCHOTT Glas, Germany**
Coating Technology and Materials for Lighting Applications 665

**Ulrich Möller: Difa Diemer & Fastenrath GmbH, Germany**
Non Dazzling Reading Lamp 679

**Kazumoto Morita: National Traffic Safety and Environment Laboratory, Japan**
Theoretical Analysis of Effect of Daytime Running Lamps on the Visibility of Automobiles 682

**Martin Mühlenberg: Hella KG Hueck & Co., Germany**
Vision Sensors and Image Processing – a Contribution to Intelligent Light Function Control 695

**Julius Muschaweck: Optics & Energy Concepts, Germany**
Constructive design of free-form optical components for illumination 703

**Kohei Narisada: Chukyo University, Japan**
Role of Adaptation in Perception under Traffic Lighting Conditions 712

**Rainer Neumann: Visteon Corp. Europe, Germany**
Future Rear Lighting Trends – Safety and Styling Aspects 723

**Bernhard Newe: Hella KG Hueck & Co., Germany**
Improved Signal Lighting 733

**Hiroo Oyama: Stanley Electric Co. Ltd., Japan**
The Development of the "Vertical Shape Line-Beam Headlamp" 738

**Salvatore Pierro: Automotive Lighting S.p.A., Italy**
Plastic Transparent Reflectors for Clear Lens Signal Functions 751

**Wilfried Pohl, Bartenbach LichtLabor, Austria**
Enhancing Visibility by reducing Glare of Street Luminaires and Headllamps 759

**Thomas Reiners: OSRAM GmbH, Germany**
Introduction of Optical Features into Light Sources 769

**Justin Rennilson: RCS rennilson consulting service, U.S.A.**
International Cooperation in Establishing Requirements for Traffic Control Devices 776

**Lawrence M. Rice: Guide Corporation, U.S.A.**
Predictive Tools for Automotive Lighting 785

**Birgit Richter: Reitter & Schefenacker GmbH & Co.KG, Germany**
Innovative Tail Lamp Concept Enhances Perceptibility Under Bad Weather Conditions 793

**Hartwig Riehl: OSRAM GmbH, Germany**
Interference Coatings in Signal Lighting 804

Content page

**Joachim Ripperger: BMW AG, Germany**
Luminance: the Future Photometric for Rear- and Brake-lights 810

**Ernst-Olaf Rosenhahn: Automotive Lighting, Germany**
Adaptive Headlamp Systems concerning Adverse Weather: Fog 817

**Kåre Rumar: The University of Michigan, U.S.A.**
Intensity of High-Beam Headlights 829

**Kåre Rumar: VTI Dev, Sweden**
Night traffic and the zero vision 849

**Arnulf Rupp: Osram GmbH, Germany**
Discharge Lamps in Automotive Lighting 859

**Torsten Ruths: Hella KG Hueck & Co., Germany**
Vehicle signature 871

**Luca Sardi: Automotive Lighting, Italy**
Light Guides for new Lighting Systems 878

**Takashi Sato: Stanley Electric Co. LTD., Japan**
The Smart Headlamp System with Variable Low-Beam Pattern 883

**Thomas Schnell: The University of Iowa, U.S.A.**
The Development of a Nighttime Driver Visibility Model for ultra-violet activated Pavement Markings 890

**Gabriel Schwab: Volkswagen AG, Germany**
GEOSim – a Tool for the Development of Adaptive Frontlighting System Control 904

**Touichirou Shiozawa: Koito Manufacturing Co. Ltd., Japan**
Thermal Air Flow Analysis of an Automotive Headlamp 915

**Michael Sivak: The University of Michigan, U.S.A.**
Quantitative Comparisons of the Benefits of Applying Adaptive Headlighting to the Current U.S. and European - Low-Beam Patterns 942

**Tomasz Targosinski: Motor Transport Institute, Poland**
Analysis of the Properties of the ECE Requirements Concerning Headlights 958

**Qifei Tu: The Institute of light sources, Fudan University, China**
Perspectives of LED Automotive Signal Lights in China 969

**Wout van Bommel: Philips Lighting, The Netherlands**
Road Lighting Research: yesterday, today and tomorrow 974

**Mark van den Berg: LumiLeds Lighting, The Netherlands**
Development of High Brightness LED's for Automotive Applications 987

**John van Derlofske: Rensselaer Polytechnic Institute, U.S.A.**
Evaluation of High Intensity Discharge Automotive Forward Lighting 994

Content page

**Stephan Völker: Hella KG, Germany**
Investigation of the visible range of different types of headlamps 1009

**Alexander von Hoffmann: Volkswagen AG, Germany**
Analysis of Adaptive Light Distributions with AFSim 1018

**Pieter L. Walraven: Em TNO Human Factors, The Netherlands**
Required changes in $V_M(\lambda)$ 1030

**Herbert Wambsganß: Hella Innenleuchten Systeme GmbH, Germany**
Innovations in Lighting Technology in Vehicle Interiors 1035

**Takao Watanabe: Koito Manufacturing Co. LTD., Japan**
The Research on the Effectiveness of AFS Bending Lamp in Japanese Road Environment 1042

**Christine Weber: Reitter & Schefenacker, Germany**
Micro controlled LED rear combination lamp with innovative signal configurations 1054

**Thomas Weber: Hella KG Hueck & Co., Germany**
Virtual Night Drive 1062

**Peter Weissleder: Audi AG, Germany**
The Demand for Attraction – Styling meets Design 1070

**Gösta Werner: Swedish National Testing and Research Institute, Sweden**
Conspicuouity of road workers at night and day, experiences of two Swedish studies 1078

**Wei Xu: Institute of Electric Light Sources, Fudan University, China**
The Measurement of Photometric Parameters of Lamps 1083

**Wojciech Żagan: Warsaw University of Technology, Poland**
Chosen luminance measurement results of the cars' signal lamps 1088

**Jiyong Zhang: Fudan University of Shanghai, China**
Computer Simulation of Headlamp Beam Pattern and Its Potential Utilization 1096

**Li Zhou: Institute of Light Sources, Fudan University, China**
The Monte Carlo Method in Design of Automobile Lighting 1104

**Wei Zhou: Fudan University, China**
Measurement of the Temperature Distribution on the Filaments of the Automotive Lamps Using the Spectroscopic Method 1110

# System Strategies for Adaptive Lighting Systems

**Michael Hamm, Automotive Lighting, Germany**

## 1 Introduction

While driving at nighttime, illumination for the driver is predominantly provided by the car's headlamps. This implies a particular responsibility and challenge for the headlamp technology. In past years in an effort to bring the day closer to the night (in terms of illumination), illumination quality as well as the luminous flux of the headlamps had been constantly improved. All improvements had been related to the standard illumination device: the low beam or dipped beam as it was defined decades ago in the '20s. In the early days of motor vehicle traffic, the low beam was used when other cars were passing by, for that moment replacing the high beam or main beam.

Nowadays, with roughly 50 million cars in Germany alone, this situation is history. Low beam is the light function used most often, with a share of about 95% having limited visual range and lateral spread.

The new leap of innovation in lighting technology are the intelligent headlamps, that provide an adaptive light distribution in all traffic situations with and without oncoming traffic.

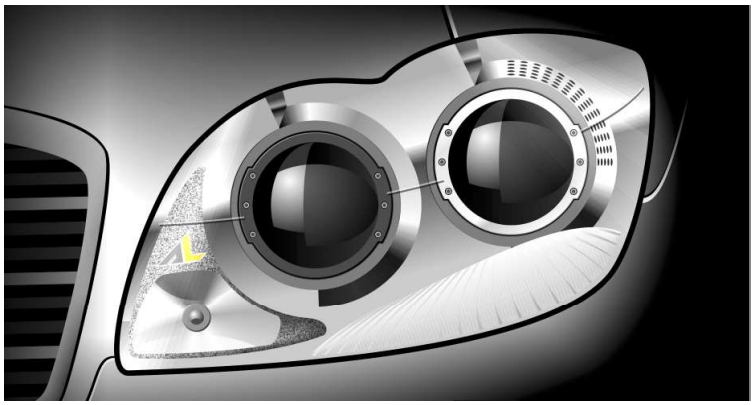

*Figure 1: Design ideas for new intelligent headlamp systems in future cars*

The car's sensors analyze and evaluate the driving situation and generate a light distribution that is adapted to that particular situation. In this process, not only the driver's comfort is increased but the visibility is improved also. This has a direct positive impact on traffic safety.

 © PAL 2001 Symposium; Darmstadt University of Technology

## HID Technology

The most important characteristics of HID Technology is the generation of light by discharge technology. The discharge arc has a significantly higher luminance and the whole system a lifetime that exceeds the car's lifetime.

Since 1999 HID systems are available for low- and high beam application, coming out of one single module.

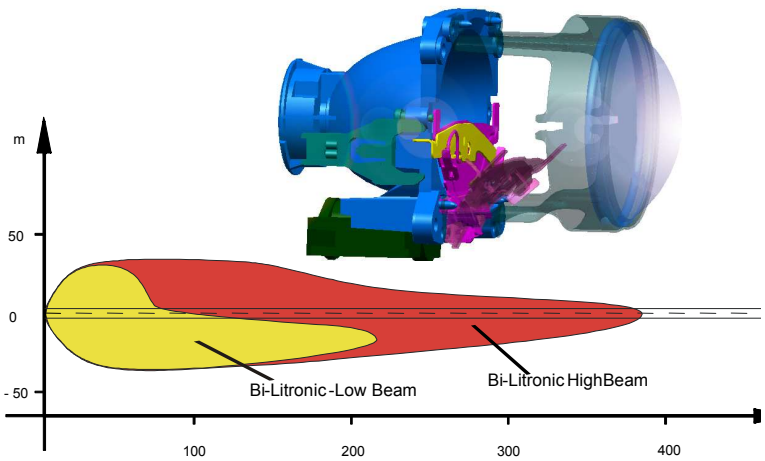


*Figure 2: Bifunction HID-System for Low and High Beam out of one projection module*

In projection systems, the actor moves the shield in order to set the high beam light contribution. In reflection systems the HID bulb is moved. This changes the focal geometry in the system and leads to a perfect high beam. Both systems include a fail-safe system that returns low beam operation in any failure situation.

HID Bifunction Technology allows both main headlamp functions to be supplied in a very limited volume. HID quality is available also for high beam. Important is in this technology that one ECU is sufficient to drive the actors, control the ignition and operation and supply the automatic levelling function. Additionally the microcontroller allows several options as end-of-line-programming, diagnosis, software update etc. This solution is the maximized compromise between driving comfort, glare reduction, good street illumination and maximized traffic safety.

Starting with HID Systems, Adaptive Lighting Strategies have to improve this now well introduced technology by using new approaches in a new system environment.

## Adaptive Lighting Systems

In the Eureka-Project 1403 AFS (Advanced Frontlighting Systems) the European car manufacturers and their headlamp and bulb suppliers began investigating the object of an improved lighting technology. During the activity of this working group some American and Japanese car manufacturers had been involved. This gave AFS a worldwide foundation and importance.

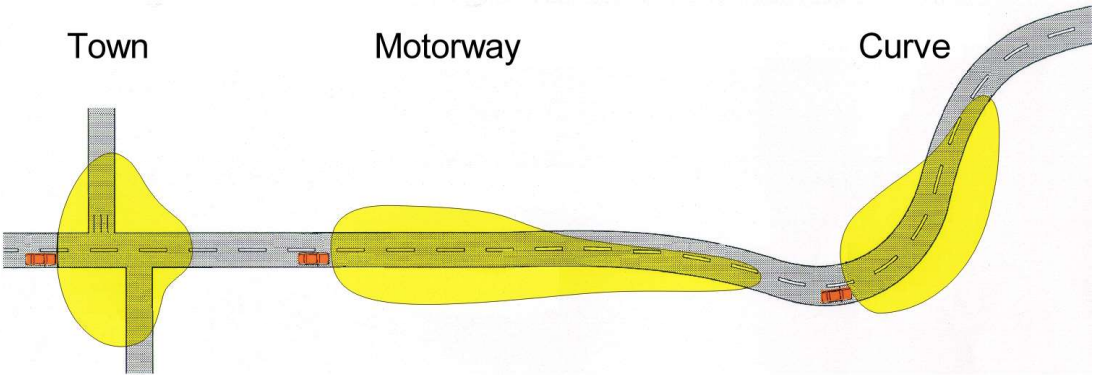


*Figure 3: Selected Driving Situations with improvements by using intelligent adaptive headlamps*

While driving the research projects and doing market investigations the emphasis of research was turned to improvements in the driving situations Highway driving, Adverse weather driving, Curves, Turnings, City and Country road driving.

The first experimental headlamp setups were used to investigate the lighting requirements to form an adaptive light distribution. In total 10 modules per side had been used to run the investigations. Although form and size had not been applicable for series implementation it was shown, in which way improvements in the light pattern would be possible. In parallel to these investigations the requirements for sensor informations available from the car network had to be defined. Modern car lines provide a large variety of sensors and data information systems (ABS, ESP, CAN) such that, in general, most information that might be relevant to adaptive lighting are already available, and new sensors need not be implemented in the car.

 © PAL 2001 Symposium; Darmstadt University of Technology

**Information, Sensors and Actors**

Basic informations that are needed to drive an adaptive headlamp system are, for example, speed, steering angle, body inclination, precipitation information (rain, fog) and the lighting devices status.

The utilization of additional sensor information as is available in some cars, as for example yaw rate, GPS navigation data and distance radar information is currently being tested. Based on the initial functional and electronic concept, first styling samples have been presented to the public.

For fulfilling the different requirements on the illumination of the street scenery, several approaches are considered:

The easiest way is switching on or switching off additional modules in the headlamp. This means a relatively low using time of each module and a big waste of construction volume. Significantly better is the sophisticated approach of multiple use of elements. This means the use of actors in the headlamp that swivel, switch or change parts inside the headlamp.

A simple, but tricky approach is the power control of the HID system.

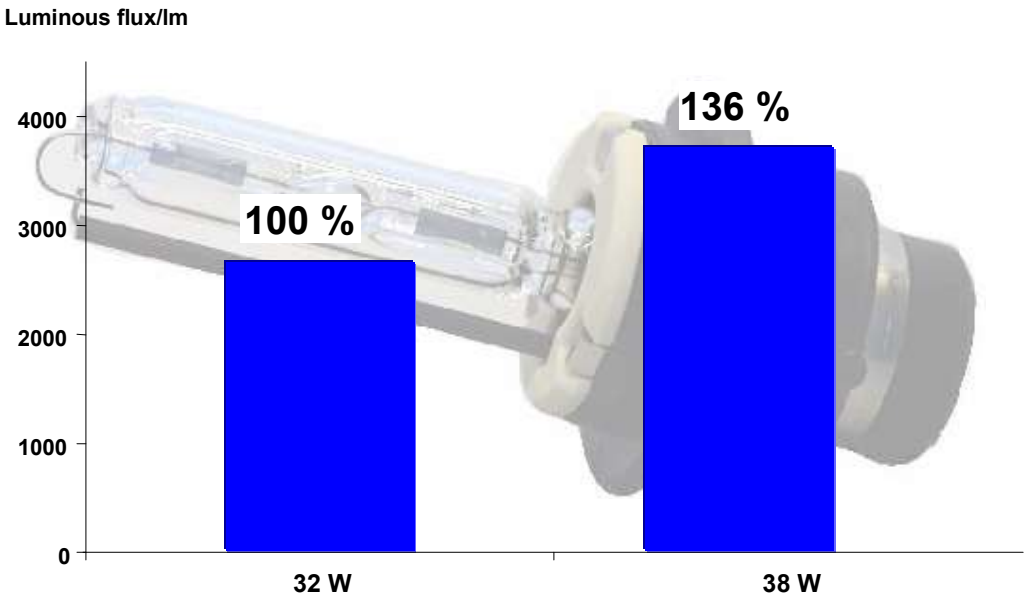


*Figure 4: Power control of gas discharge bulbs with intelligent ECU*

Without changing the light colour and in the lamp specifications the possibility is given to achieve 36% more light out of the same module, the same space

without switching additional devices. All light values can be shifted at once or continuously.

The variation of luminous flux in the lamp specification range is equivalent to 2 halogen low beam headlamps, that can be added as the variable part of the light distribution. Especially when using motorways, when an increase of visual range from 65 to 130 m should be provided this seems to be an appropriate solution. The power control is given by the ECU with the input parameters available, e.g. speed, navigation date etc.

For the realization of curve lighting functions a horizontal movement of parts of the reflector with DC or stepper motors must be realized. In order to allow the light distribution to follow the course of the street, car specific informations as yaw rate, lateral acceleration, steering wheel angle or wheel angle are required. Ideal and predictive informations can be supplied by navigation and video systems. The following evaluation of three different driving situations shows the importance of the control and software concept. A car specific application from e.g. steering wheel angle and the photometric requirements for optimal illumination is needed.

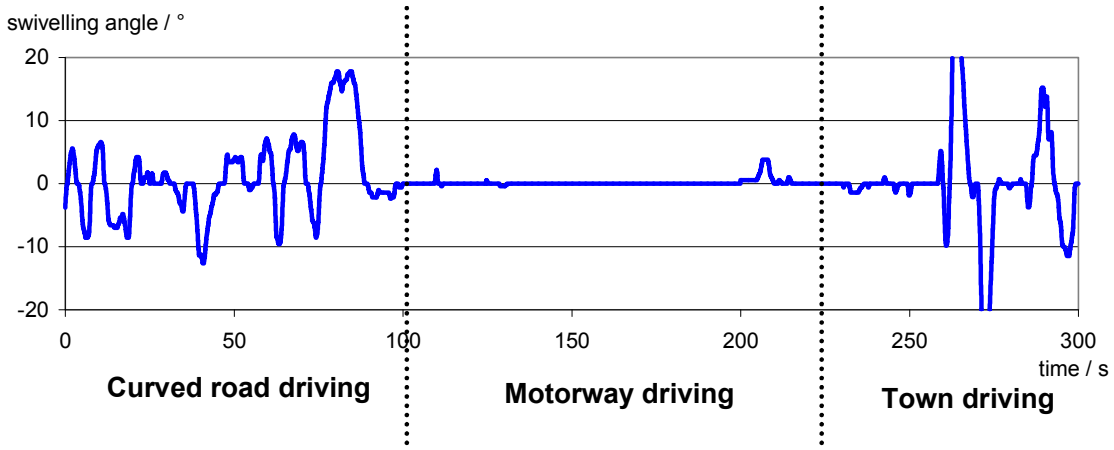


*Figure 5: Examples of required swiveling angles for adaptive light patterns*

On motorways the large curve radii show now big impact on the swiveling of a headlamp reflector, except the maneuvers for passing or exiting on the motorway. If the driving is done in mountain regions on serpentines or in town crossings and turnings, swiveling angles are exceeding 20°. Considering the construction volumes nowadays available this seems a hard challenge and

 © PAL 2001 Symposium; Darmstadt University of Technology

barely not to be realized in a standard sized headlamp. So multiple step concepts have to be found, that help in such extreme situations.

The interactions described create an additional amount of adaptation to hystereses, swiveling speed, switching time and switching point of all modules used in the concept.

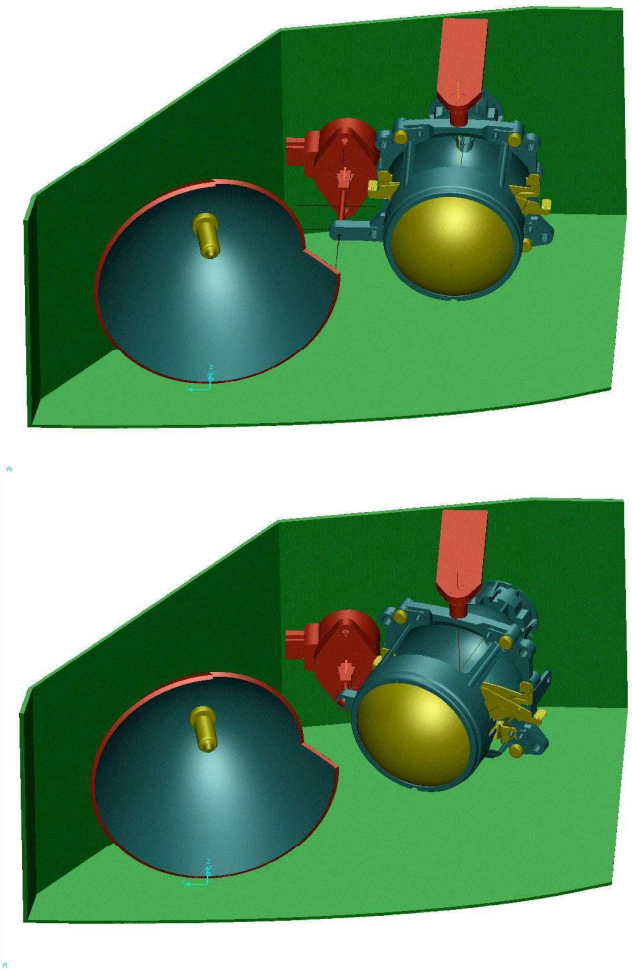

*Figure 6: Modular elements may swivel and show the new functionality of Curve Lighting*

**Software- and Control concepts**

The definition of type and content of the information that is required for the control of adaptive lighting systems has an important impact on the efforts that have to be scheduled for the development of an AFS-ECU. The system architectures in a car use more and more bus systems. Due to standardization development CAN bus seems to be one of the potential winners of the bus competition. The ideas shown in the following pictures are therefore based on CAN.

The structure of the control is defined in modular levels, that allow a joint base and a diversification on car manufacturers ideas and requirements.

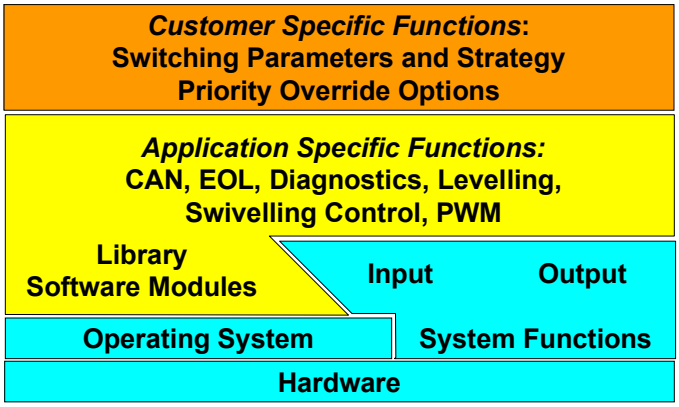


*Figure 7: Modular system design to combine customer specific requirements with independent platform design*

The functions available in the concept are stored in software libraries. The control and steering parameters are part of customer specific modules that can be depending on the car manufacturer's concept and the switching and control strategy as well as from marketing conceptions.

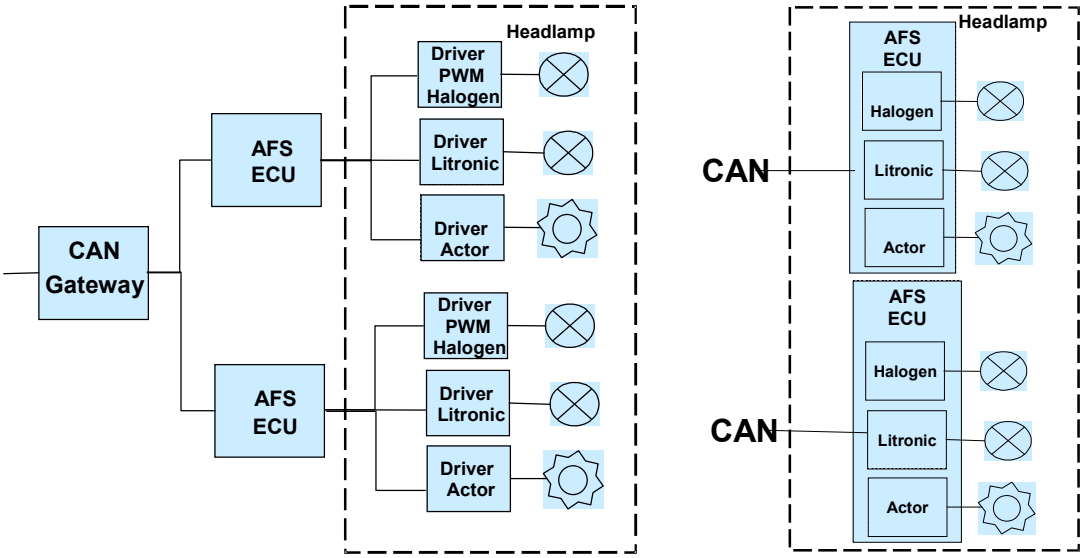


*Figure 8: ECU concepts for adaptive light control*

Implementing the adaptive control in the car electronic can be made on different ways. Dominating factor is the availability of an appropriate bus system for deciding the implementation and location of an interface box.


© PAL 2001 Symposium; Darmstadt University of Technology

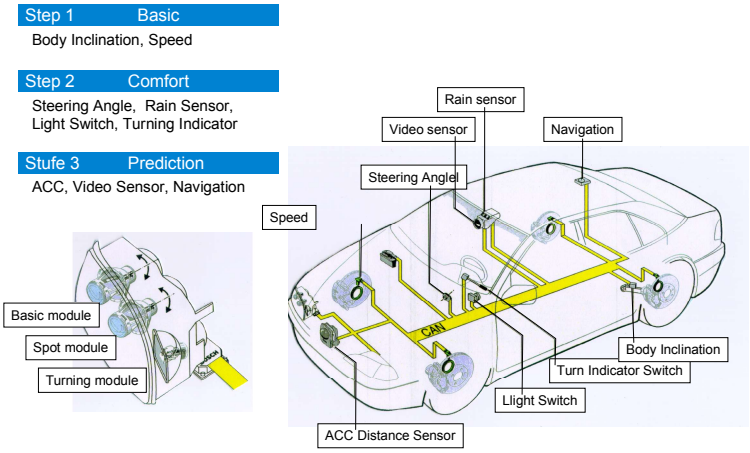


*Figure 9: Multiple Step approach on sensor information available in the car to be used for adaptive headlamp control*

The minimal requirements for the control of an adaptive system are informations about speed and levelling. Secondly, informations about the direction of the car as given by the steering wheel angle are required. European cars using HID systems usually have speed and levelling available. Cars using ESP systems also can supply the steering wheel and yaw rate.

## Adaptive Headlamp systems Impact on Traffic Safety

When introducing adaptive elements in headlamp technology, high priority is given to the improvement of traffic safety. The improvement of the vision conditions and the seeing distances has direct influence to the ability of the driver to detect potentially dangerous situations in time.

The increase of seeing distance provides the driver with additional reaction time that can be used for breaking or evasive maneuvers. An earlier start for a braking maneuver means a decrease of accident fatality. To show this experimentally, several driving situations had been investigated

Different light distributions had been generated by a H4 system, a modern HID Xenon system and the new adaptive headlamp system. In static tests the light distributions were presented to 11 test persons who had to analyze the visual conditions. Grey visibility objects had been placed on the side of the street. In order to obtain comparable results, all object surfaces reflected with the same reflection coefficient. Depending on the light distribution, different numbers of visibility objects could be detected in the experimental setup.

The results show, that significant improvements can be proven by the adaptive headlamp system, without generating additional glare for oncoming traffic.

## Curve Lighting

The results presented show that the detection distance of objects in a left curve is increased from 53m to 89 m. This is an improvement of 68% compared to the standard halogen light distribution.

It can be assumed that, if the object will be detectable in longer distance, the driver will experience an increase in time to decide further actions. This gain in detection distance for left hand curves corresponds to a gain in detection time of appr. 1,9 seconds, assuming a speed of 70 km/h. This additional time is now available to the driver, who can decide to break earlier, and in more controlled fashion, leading to a possible stop in time, before reaching the detected object.

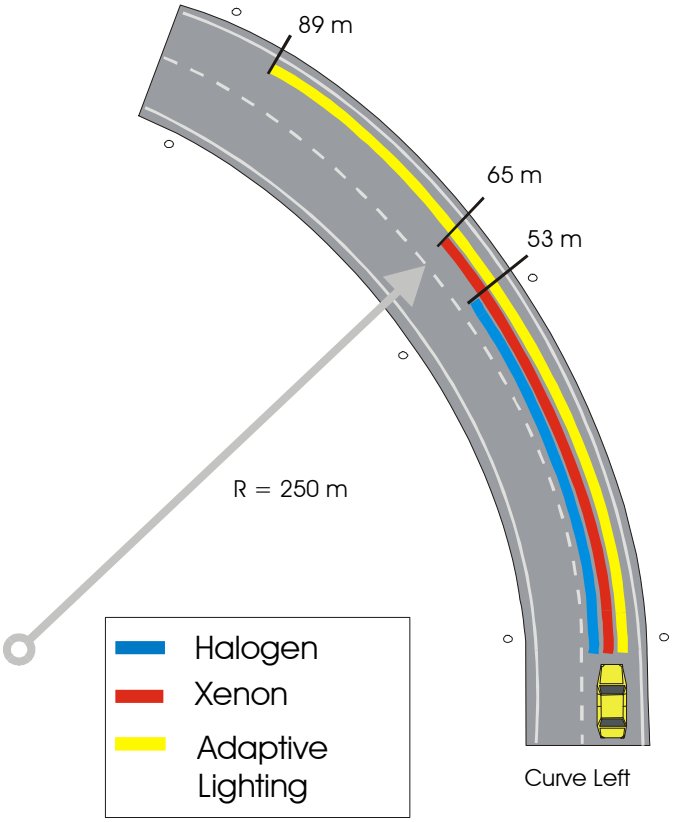


*Figure 10: Static test: Results of the investigations about visibility distances obtained with halogen-, HID- and adaptive headlamps.*


© PAL 2001 Symposium; Darmstadt University of Technology

**Motorway lighting**

The improvements in motorway situations could become even more important. The results of the investigations are shown. The detection distance doubles from 70m to 148m (211%).

Assuming a speed of 130km/h (recommended on German highways) this improvement means 2,16 seconds more travelling time before the object will be reached. Within that time the driver is able to evaluate the situation he is approaching. Additional reaction scenarios can be checked and this gives the chance to make optimized decisions, to brake, stop or pass.

Assuming the maximum speed on US highways with 70 mph the improved detection distance equals 2,49 seconds.

Since the braking distance increases nonlinearly with increasing speed, this dramatic increase in detection time may constitute one of the most effective measures that can be taken to reduce the number of fatal accidents during travel at night.

Due to the fact that accidents or dangerous situations will be avoided before becoming serious, this also corresponds to the comfort of driving at night time.

The increased detection distance is available at any time and gives more information about the course of the street in distances below the standard one. The driver will be better prepared for any change and will therefore drive with higher comfort.

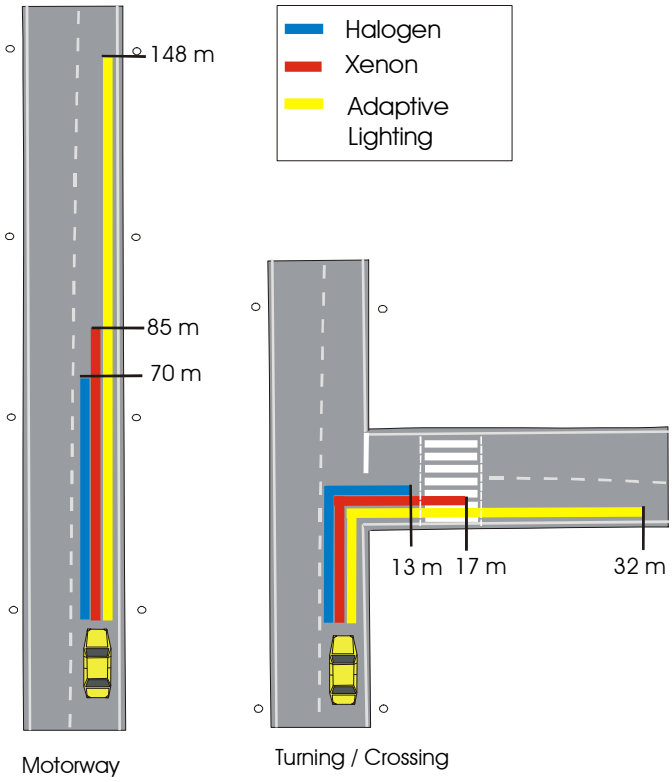


*Figure 11: Static test: Results of the investigations about visibility distances obtained with halogen-, HID- and adaptive headlamps*

**Turns/Crossings Lighting**

Driving through turns or crossings with adaptive headlamp systems will open a new dimension in experienced driving safety. When approaching a typical crossing or intersection, conventional headlamp illumination just barely reaches the areas where pedestrians are crossing.

The pedestrians are often only visible after the turning or driving maneuver has already fully developed. Often enough will the driver have a feeling of driving into a “black hole”, into a situation that he or she was not able to evaluate before. The adaptive headlamp system will enable the driver to triple the distance for detection. This will mean a drastic improvement over all previously uncertain turning and crossing maneuvers.


© PAL 2001 Symposium; Darmstadt University of Technology

| Detection Distance | **Curve Lighting** | **Motorway** | **Turning/Crossing** |
|---|---|---|---|
| **Halogen / m** | 53 | 70 | 13 |
| *Percentage* | 100% | 100% | 100% |
| **Xenon / m** | 65 | 85 | 17 |
| *Percentage* | 122,6% | 121,4% | 130,8% |
| **Adaptive Lighting** | 89 | 148 | 32 |
| *Percentage* | 167,9% | 211,4% | 246,2% |

*Table 1: Comparison of improvement in detection distance between Halogen, HID and Adaptive Lighting Systems*

**Summary**

With the Adaptive System, an optimal illumination can be achieved even in challenging situations, thus eliminating to a large extent risky or fatal driving situations because more time is available to judge the driving situation correctly and to take the appropriate steps in time.

The introduction of Adaptive Lighting Systems will generate an even more integrative simultaneous engineering process. Additionally, Adaptive „intelligent“ headlamps will bring the headlamp from its isolation in the front module back into the world of electronics and car networking systems.

**Literature**

AFS – Advanced Frontlighting Systems, Eureka Project 1403.

Boebel, D., Eichler, H.; Hebler, V.: Bifunction HID Headlamp Systems-Reflection and Projection Type.
In: SAE Technical Paper Series 2000-01-0429, 2000.

Hamm, M.: The Glare Discussion through Gas Discharge Headlamps: An Objective Approach through Physiology and Psychology.
In: PAL Progress in Automobile Lighting PAL 97, Vol. 3.
Darmstadt University of Technology; 1997.

Hamm, M.; Friedrich, A: Intelligent, Adaptive Headlamps Systems: The Exterior Lighting of the Future.
In: ATZ Automobiltechnische Zeitschrift, 102 (2000), Vol. 12.

Hamm, M.; Rosenhahn, E.-O.: Xenon Light and its impact on Traffic Safety Aspects.
In: Progress in Automotive Lighting, PAL 99 Vol. 5. München: Utz, 1999.

Hogrefe, H.: Adaptive Frontlighting Systems for Optimum Illumination of Curved Roads, Highway Lanes and Other Driving Situations.
In: SAE Technical Paper Series 2000-01-431, 2000.

Rosenhahn, E.-O.: Analysis of Lighting Parameters during Adverse Weather Conditions
In: SAE Technical Paper Series 2000-01-319, 2000.

Schmidt-Clausen, H.-J.: Der Einfluß der Scheinwerferanbauhöhe und Scheinwerfereinstellung auf die Erkennbarkeit von Objekten im Straßenraum.
In: Forschungsbericht BAST, Projekt 1.8604, 1987.

US Department of Transportation: Distribution of Motor Vehicle Fatal Crashes by Day of Week, Time of Day and Weather and Light Conditions. Table 3-26.1999

US Department of Transportation: Traffic Accidents and Fatalities.
In: American Automobile Manufacturers Associations Motor Vehicle Facts & Figures 1998.

 © PAL 2001 Symposium; Darmstadt University of Technology