8320194

THE UNITED STATES OF AMERICA

TO ALL TO WHOM THESE PRESENTS SHALL COME:

UNITED STATES DEPARTMENT OF COMMERCE
United States Patent and Trademark Office

December 1, 2022

THIS IS TO CERTIFY THAT ANNEXED HERETO IS A TRUE COPY FROM THE RECORDS OF THIS OFFICE OF:

PATENT NUMBER: *9,739,331*
ISSUE DATE: *August 22, 2017*

By Authority of the
Under Secretary of Commerce for Intellectual Property
and Director of the United States Patent and Trademark Office

W. Montgomery
Wanda Montgomery
Certifying Officer

US009739331B2

(12) **United States Patent**
Becker

(10) **Patent No.: US 9,739,331 B2**
(45) **Date of Patent: Aug. 22, 2017**

(54) **METHOD AND APPARATUS FOR AN ADJUSTABLE DAMPER**

(71) Applicant: **Fox Factory, Inc.**, Watsonville, CA (US)

(72) Inventor: **William M. Becker**, Aptos, CA (US)

(73) Assignee: **Fox Factory, Inc.**, Scotts Valley, CA (US)

(*) Notice: Subject to any disclaimer, the term of this patent is extended or adjusted under 35 U.S.C. 154(b) by 0 days.

(21) Appl. No.: **14/822,859**

(22) Filed: **Aug. 10, 2015**

(65) **Prior Publication Data**

US 2015/0344100 A1 Dec. 3, 2015

Related U.S. Application Data

(63) Continuation of application No. 13/890,753, filed on May 9, 2013, now Pat. No. 9,103,400.

(60) Provisional application No. 61/644,859, filed on May 9, 2012.

(51) **Int. Cl.**

F16F 9/43	(2006.01)
B62K 25/08	(2006.01)
F16F 9/34	(2006.01)
B62K 25/04	(2006.01)

(52) **U.S. Cl.**

CPC ***F16F 9/435*** (2013.01); ***B62K 25/08*** (2013.01); *B62K 2025/048* (2013.01); *F16F 9/34* (2013.01)

(58) **Field of Classification Search**

CPC .. F16F 9/34; F16F 9/346; F16F 9/3465; F16F 9/435; B62K 2025/048

See application file for complete search history.

(56) **References Cited**

U.S. PATENT DOCUMENTS

5,503,258	A *	4/1996	Clarke	F16F 9/48 188/266.5
5,697,477	A *	12/1997	Hiramoto	F16F 9/0218 188/322.18
5,816,281	A *	10/1998	Mixon	B60T 17/222 137/14
5,853,071	A *	12/1998	Robinson	B60T 11/30 188/352
6,311,961	B1 *	11/2001	Julia	B60G 17/0416 188/313
6,592,136	B2	7/2003	Becker et al.	
7,255,210	B2 *	8/2007	Larsson	F16F 9/342 188/280
8,480,064	B2	7/2013	Talavasek	
9,103,400	B2 *	8/2015	Becker	F16F 9/435
2003/0001358	A1 *	1/2003	Becker	B62K 25/08 280/276
2006/0289258	A1 *	12/2006	Fox	F16F 9/512 188/322.21
2010/0186836	A1 *	7/2010	Yoshihiro	H01M 8/04201 137/614.05
2012/0007327	A1 *	1/2012	Talavasek	B62K 25/20 280/124.1
2012/0080279	A1 *	4/2012	Galasso	B60G 17/08 188/297

(Continued)

Primary Examiner — Vishal Sahni

(57) **ABSTRACT**

An air bleed system for a suspension fork or shock absorber includes: a fluid passage between an interior of the suspension and an exterior of the suspension; and a manually operable valve having a first position substantially closing the fluid passage and a second position allowing fluid flow between the interior and the exterior.

8 Claims, 4 Drawing Sheets

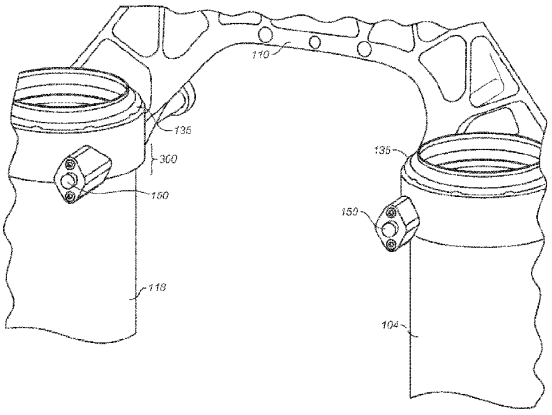

(56) **References Cited**

U.S. PATENT DOCUMENTS

2013/0319805 A1* 12/2013 Becker F16F 9/435
188/322.13

* cited by examiner

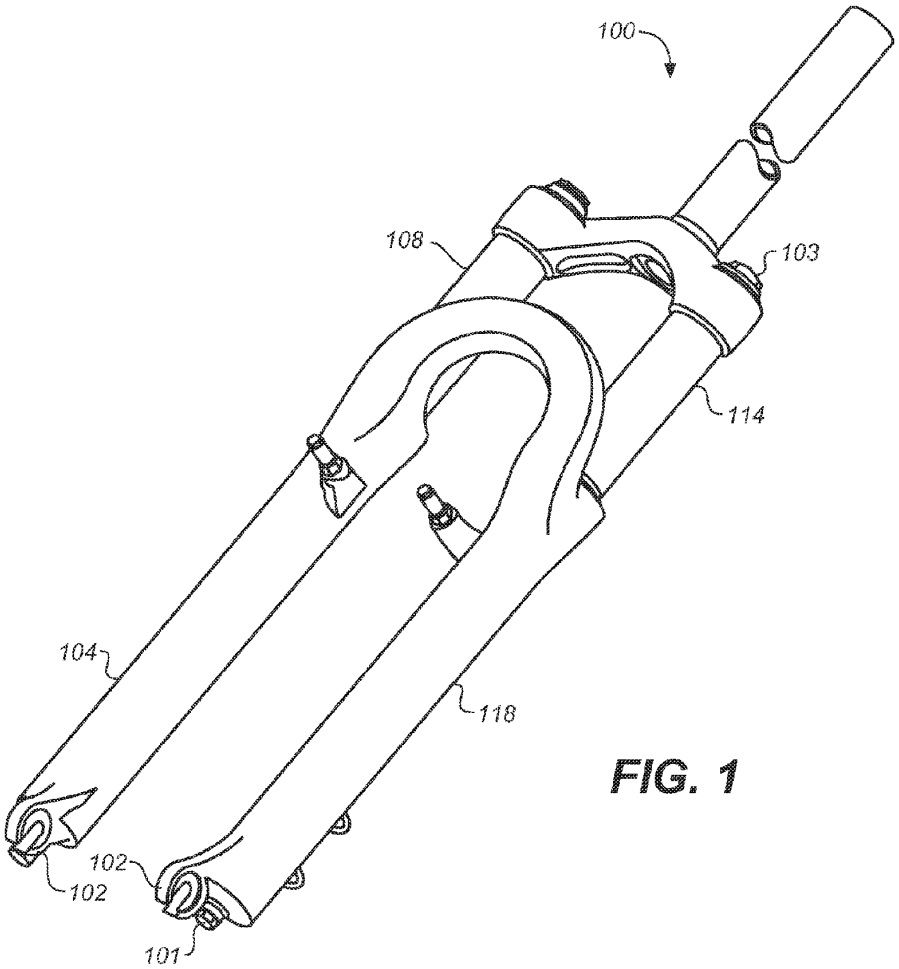

FIG. 1

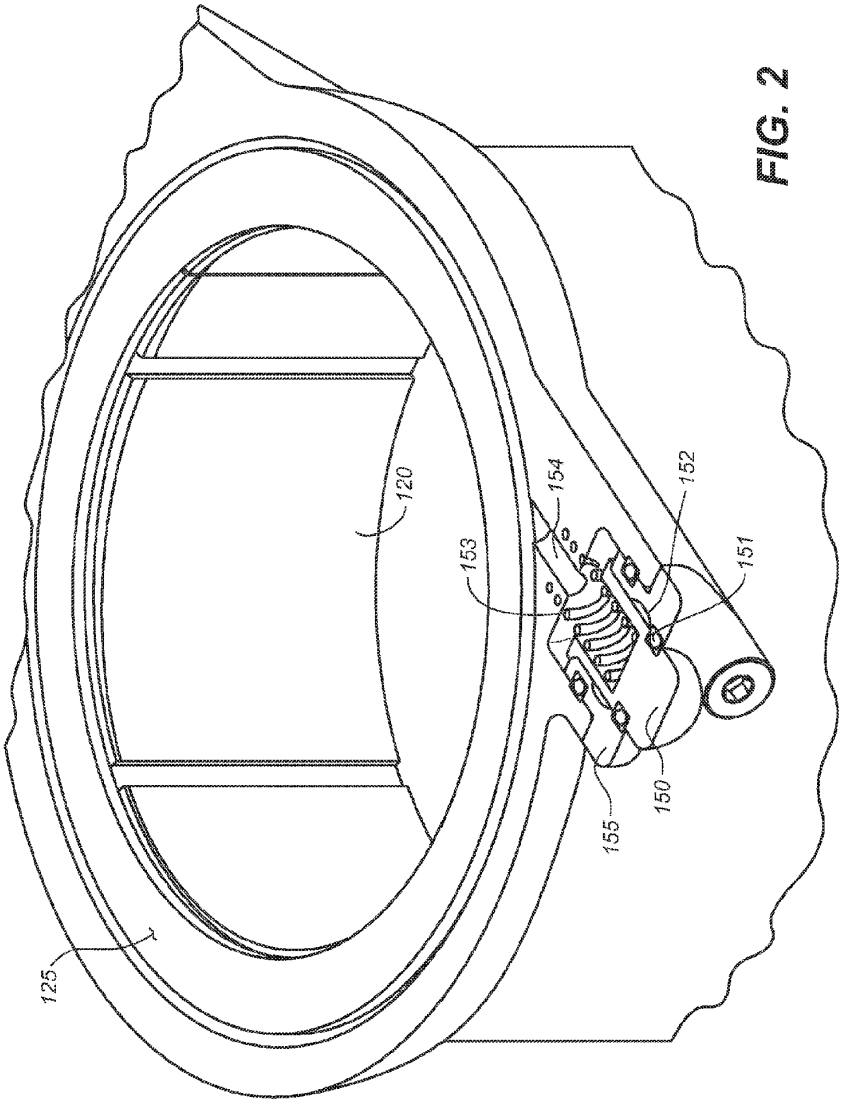

FIG. 2

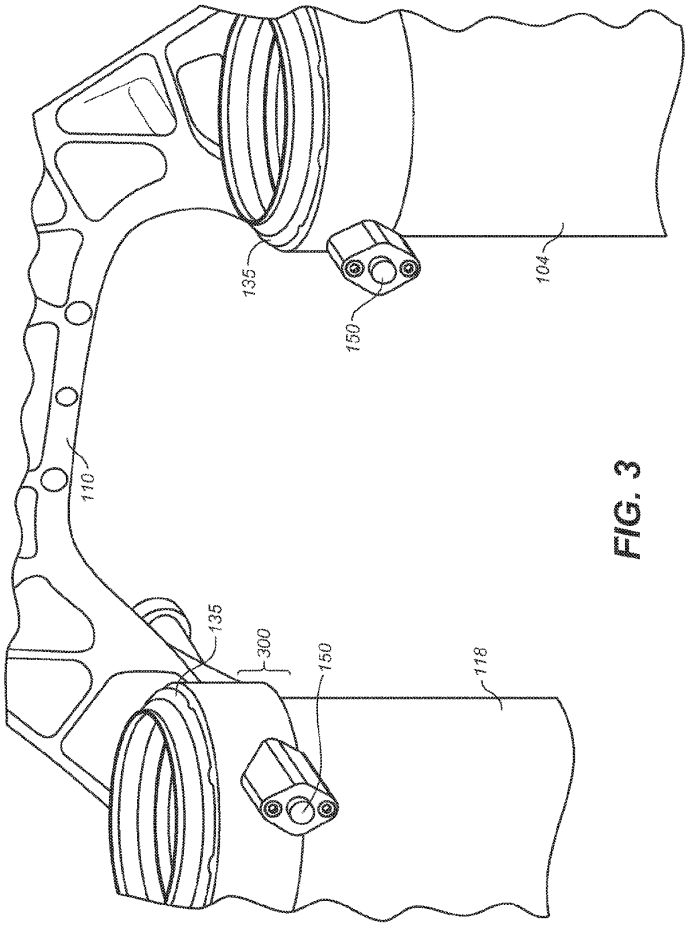

FIG. 3

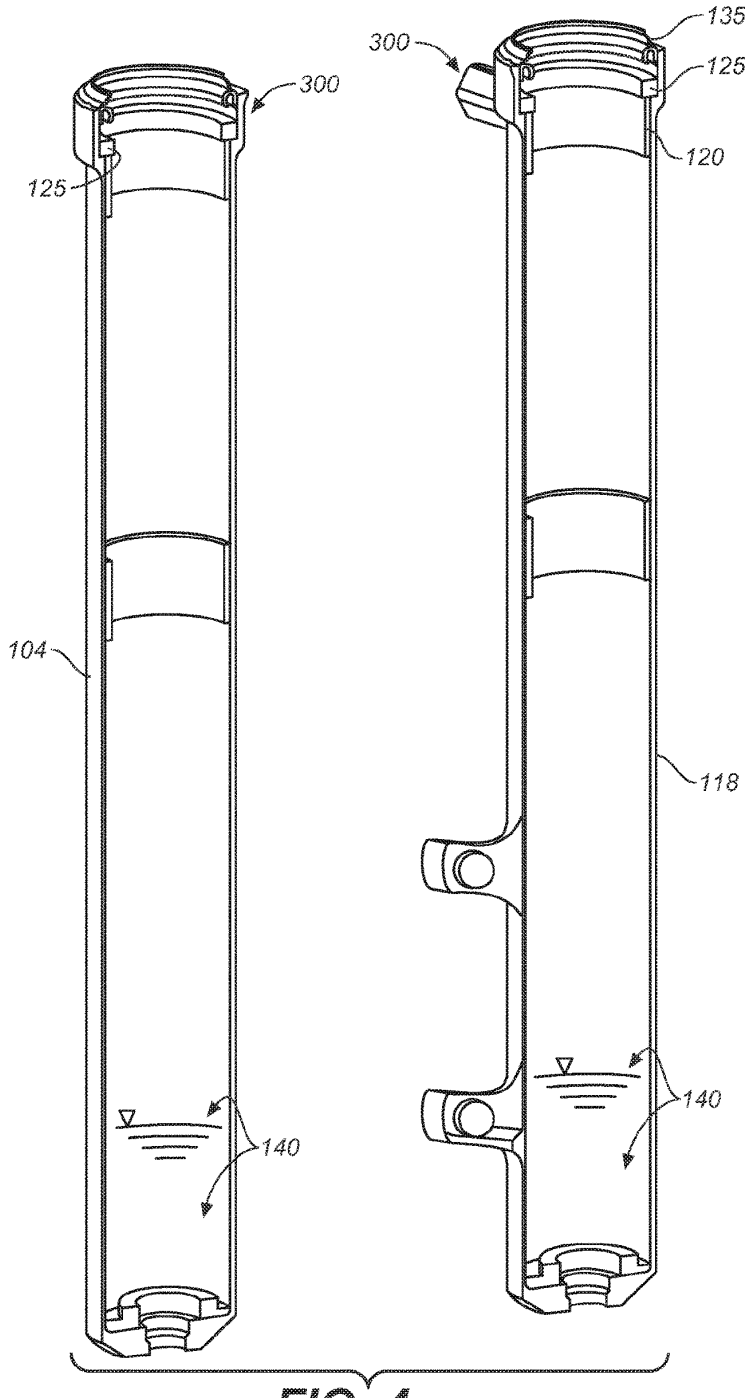

FIG. 4

METHOD AND APPARATUS FOR AN ADJUSTABLE DAMPER

CROSS-REFERENCE TO RELATED APPLICATIONS

This application is a continuation and claims priority to and the benefit of co-pending U.S. patent application Ser. No. 13/890,753 filed on May 9, 2013 entitled "METHOD AND APPARATUS FOR AN ADJUSTABLE DAMPER" by William M. Becker, and assigned to the assignee of the present application; U.S. patent application Ser. No. 13/890,753 is herein incorporated by reference in its entirety.

U.S. patent application Ser. No. 13/890,753 claims the benefit of and claims priority of U.S. provisional patent application Ser. No. 61/644,859, filed on May 9, 2012, entitled "METHODS AND APPARATUS FOR PRESSURE EQUALIZATION" by William M. Becker, assigned to the assignee of the present application, and is hereby incorporated by reference in its entirety herein.

BACKGROUND

Field of the Invention

Embodiments of the invention generally relate to methods and apparatuses for use in suspension components. Particular embodiments of the invention relate to method and apparatus useful for equalizing ambient pressure within vehicle suspension.

Description of the Related Art

Vehicle suspension systems typically include a spring component or components and a dampening component or components. Typically, mechanical springs, like helical springs are used with some type of viscous fluid-based dampening mechanism and the two are mounted functionally in parallel. In some instances, a spring may comprise pressurized gas and features of the damper or spring are user-adjustable, such as by adjusting the air pressure in a gas spring. A damper may be constructed by placing a damping piston in a fluid-filled cylinder (e.g., liquid such as oil). As the damping piston is moved in the cylinder, fluid is compressed and passes from one side of the piston to the other side. Often, the piston includes vents there-through which may be covered by shim stacks to provide for different operational characteristics in compression or extension.

Ambient air pressure at the time of building a suspension fork is sealed inside the fork legs. When the fork is assembled at low elevation and then taken to ride at high elevations, the air pressure sealed in the lower leg, because of the decreased high elevation exterior air pressure and corresponding differential pressure, adds pressure and load to the seal, which ultimately creates significantly higher axial friction in the telescoping suspension fork.

As the foregoing illustrates, what is needed in the art are improved techniques for lowering equalizing ambient pressure within a vehicle suspension.

BRIEF DESCRIPTION OF THE DRAWINGS

FIG. **1** depicts a front bicycle fork, in accordance with an embodiment.

FIG. **2** depicts a cross-sectional view of the air bleed assembly and the vent hole between the seal and the upper busing, in accordance with an embodiment.

FIG. **3** depicts a perspective view of the air bleed assembly, in accordance with an embodiment.

FIG. **4** depicts a positioning of the air bleed assembly relative to the oil bath lubrication in the lower leg/shock tube, in accordance with an embodiment.

The drawings referred to in this description should be understood as not being drawn to scale except if specifically noted.

BRIEF DESCRIPTION

Reference will now be made in detail to embodiments of the present technology, examples of which are illustrated in the accompanying drawings. While the technology will be described in conjunction with various embodiment(s), it will be understood that they are not intended to limit the present technology to these embodiments. On the contrary, the present technology is applicable to alternative embodiments, modifications and equivalents, which may be included within the spirit and scope of the invention as defined by the appended claims.

One embodiment hereof comprises a shock absorber for a vehicle. In one embodiment, the vehicle is a bicycle. The shock absorber, for example, a front fork **100** as shown in FIG. **1**, is advantageous because it includes a damper **118/114** (lower fork tube and upper fork tube, respectively, of the damper leg) having a manually adjustable damping resistance. In one embodiment, the manually adjustable damping function allows a user to adjust a "platform" threshold which must be exceeded before the shock absorber can experience significant compression travel. It allows the user to establish a level, in one embodiment, for compression damping whereby such damping is increased or decreased selectively.

U.S. Pat. No. 6,135,434, which patent is herein incorporated by reference in its entirety, shows certain variations of positive and negative spring mechanisms. Another selectively variable damping mechanism is shown in U.S. Pat. No. 6,360,857, which patent is herein incorporated by reference in its entirety. Optionally, any of the foregoing mechanisms may be integrated, or used in combination, with any other features disclosed herein.

U.S. Pat. Nos. 6,415,895, 6,296,092, 6,978,872 and 7,308,976, each of which patents is herein incorporated by reference in its entirety, show certain variations of position sensitive damping mechanisms. Another position sensitive damping mechanism is shown in U.S. Pat. No. 7,374,028, which patent is herein incorporated by reference in its entirety. Another position sensitive damping mechanism is shown in U.S. Pat. No. 5,190,126, which patent is herein incorporated by reference in its entirety. Optionally, any of the foregoing mechanisms may be integrated, or used in combination, with any other features disclosed herein.

U.S. Pat. Nos. 6,581,948, 7,273,137, 7,261,194, 7,128,192, and 6,604,751, each of which patents is herein incorporated by reference in its entirety, show certain variations of inertia valve mechanisms for controlling aspects of compression damping. Additionally, U.S. Published patent Application Nos. 2008/0053768 A1, 2008/0053767 A1, 2008/0035439 A1, 2008/0007017 A1, 2007/0296163 A1, 2007/0262555 A1, 2007/0228691 A1, 2007/0228690 A1, 2007/0227845 A1, 2007/0227844 A1, 2007/0158927 A1, 2007/0119670 A1, 2007/0068751 A1, 2007/0012531 A1, 2006/0065496 A1, each of which patent applications is herein incorporated by reference in its entirety, show certain variations of inertia valve mechanisms for controlling aspects of compression damping. Optionally, any of the foregoing inertia valve mechanisms or other features may be integrated, or used in combination, with any other features

disclosed herein. A shock absorber or fork may be equipped, for example, with an inertia valve for controlling an aspect of damping and a position sensitive valve for controlling another aspect of damping.

FIG. **1**, FIG. **3**, and FIG. **4**, show suspension fork legs, either or both of which would, in one embodiment, comprise portions of a bicycle fork (or motorcycle fork). During operation, the damper leg of the fork is subject to compression and rebound loads. The compression is induced by disparities in the terrain being traversed by a vehicle equipped with the fork. The rebound is induced by a spring (e.g. gas spring, mechanical spring, coil—not shown but for example in leg **104/108**), preferably located in another leg of the fork, which stores energy during compression of the fork and then releases that energy when the disparity is passed. The energy is released in urging the suspension unit to elongate axially following the axial compression during which the energy is stored. The top cap **103** and its connected parts move with the upper fork tube **114** and **108** during compression and rebound and the lower nut assembly **101** and its connected parts move with the lower fork tube **104** or **118**.

Movement of the upper fork tube (e.g., **114**) relative to the lower fork tube (e.g., **118**) causes a piston assembly to move axially within the damper body. During a compression stroke, the piston assembly moves downward in the damper body and thereby reduces the volume of the compression chamber. As fluid is displaced from the compression chamber, some of it flows through passages and deflects a one way shim valve to enter the rebound chamber. Some of the displaced fluid flows through an orifice into a reservoir. The resistance to movement of fluid from the compression chamber, through passages (and shim valve on piston) and the orifice provide compression damping for the suspension unit in which the damper cartridge is included.

Ambient air pressure at the time of building a suspension fork is "sealed" inside the upper leg/lower leg assembly (e.g., upper fork tube **114** telescopically positioned within lower fork tube **118**). In one embodiment, it is preferred that the air pressure within the assembly at static (unloaded) extension be substantially equal to ambient exterior air pressure so that there is no net differential pressure acting across the lower leg seal **135** (see FIG. **3**). Suspension forks are often ridden at many different elevations, however, and the ambient air pressure reduces (decreases) as a function of increasing elevation (and increases at lower elevations).

Air pressure above sea level can be calculated as:

$$P=1091325(1-2.2577\ 10^{-5}h)^{5.25588}$$

Where p=pressure absolute and h=altitude above sea level.

The typical ambient air pressure at 8,000 ft. elevation is 3.80 psi lower than the trapped air pressure inside the fork. The typical ambient air pressure at 10,000 ft. elevation is 4.60 psi lower than the trapped air pressure inside the fork. (http://www.enqineerincitoolbox.com/air-altitude-pressure-d 462.html.)

When a fork is assembled at low elevation and then taken to ride at high elevations, the "sealed lower leg air pressure", because of the now decreased high elevation exterior air pressure and corresponding differential pressure, adds pressure and load to the lower oil control lip of the seal which creates significantly higher axial friction in a telescoping suspension fork.

The presently disclosed system allows a rider to push a button and let the pressure in the lower leg equalize to ambient pressure at high elevation and therefore restore a lower-friction fork. Generally, it is important to seal a fork to prevent the lower leg oil bath lubrication from leaking out of the fork. In one embodiment, the air bleed assembly **300** (of FIG. **4**) is located right below the lower leg seal **135** so that when excessive air pressure in the fork is relieved at high elevation, the oil bath **140** typically leveled in the lower leg (typically 20-50 cc) does not spray/leak out. In other words, a substantial portion (most of the oil bath **140**), if not all, of the oil bath **140** remains within the lower leg (and does not spray/leak out of the lower leg) when the air bleed assembly **300** is opened to release excessive air pressure from the fork.

FIG. **3** shows the air bleed assembly **300** including button **150** positioned on a die-cast feature of the lower leg. Pressing the button **150** equalizes the air pressure in the fork/shock assembly with the local ambient air pressure.

FIG. **2** shows a cross-section of the air bleed assembly **300** and the vent hole **154** between the seal (not shown) and the upper bushing **120** (or behind foam ring **125**). When the button **150** is pressed, the sealing o-ring **151** moves into the diametrical recess **152** and thereby becomes unsealed, letting the air pressure by-pass into or out of the fork leg via vent hole **154** to equalize the pressure in the fork leg with an exterior pressure. When the button **150** is released, a spring **153**, which biases the button/valve **150** toward a closed position, urges the o-ring **151** into a sealing engagement with a seal bore **155**.

FIG. **4** shows positioning of the air bleed assembly **300** relative to the "oil bath" lubrication in the lower leg/shock tube.

It should be noted that any of the features disclosed herein may be useful alone or in any suitable combination. While the foregoing is directed to embodiments of the present invention, other and further embodiments of the invention may be implemented without departing from the scope of the invention, and the scope thereof is determined by the claims that follow.

The invention claimed is:

1. A lower fork and air bleed assembly combination comprising:

a lower fork, said lower fork configured to have a first end coupled to a vehicle wheel, and a second end configured to be telescopically engaged with a first end of an upper fork, said lower fork further comprising:

a lower leg seal located at an outermost edge of said second end of said lower fork tube, said lower leg seal configured for sealing closed a gap disposed between said upper fork tube and said lower fork tube when said lower fork is telescopically engaged with said first end of said upper fork, thereby preventing an oil bath lubrication occupying an area within said lower fork tube at a first end of said lower fork tube from leaking from said lower fork; and

an upper bushing attached to and positioned adjacent to said lower leg seal; and

an air bleed assembly disposed on said lower fork tube, said air bleed assembly configured for equalizing ambient pressure within said lower fork, said air bleed assembly comprising:

a fluid passage disposed between an interior of said lower fork and an exterior of said lower fork; and

a manually operable valve located in said lower fork and coupled to said fluid passage, said manually operable valve having a first position substantially closing said fluid passage and a second position allowing a fluid to flow between said interior and said exterior, said manually operable valve disposed

between said lower leg seal and said first end of said lower fork, and wherein said fluid passage and said manually operable valve are located at a distance from an oil bath lubrication within said lower fork, such that when said manually operable valve is in said second position, most, if not all of said oil bath lubrication remains within said lower fork and such that when trapped air pressure inside said lower fork, that is higher than a local ambient air pressure outside of said suspension fork or shock absorber, is relieved most, of said oil bath lubrication that is within said lower fork remains within said lower fork.

2. The lower fork and air bleed assembly combination of claim **1**, wherein said fluid comprises:

a gas.

3. The lower fork and air bleed assembly combination of claim **1**, said air bleed assembly further comprising:

a valve activator coupled with said manually operable valve, said valve activator comprising:

an activation position placing said manually operable valve into said first position; and

a deactivation position placing said manually operable valve into said second position, and whereupon when in said activation position, the trapped air pressure in said lower fork is equalized with the local ambient air pressure.

4. The lower fork and air bleed assembly combination of claim **3**, wherein said valve activator comprises:

a button to select said activation position and said deactivation position.

5. The lower fork and air bleed assembly combination of claim **3**, wherein said valve activator is located on a die-cast feature of said lower fork.

6. The lower fork and air bleed assembly combination of claim **5**, further comprising:

a diametrical recess; and

a sealing o-ring comprising:

a sealed position; and

an unsealed position, wherein said sealed position seals between said die-cast feature and said lower fork, whereupon when said valve activator is moved from said activation position to said deactivation position, said sealing o-ring moves into said diametrical recess, thereby attaining said unsealed position and letting air pressure by-pass into or out of said lower fork via a vent hole.

7. The lower fork and air bleed assembly combination of claim **3**, wherein said manually operable valve comprises:

a spring coupled with said valve activator, whereupon when said valve activator is moved into said deactivation position, said spring biases said valve activator toward said first position.

8. The lower fork and air bleed assembly combination of claim **7**, wherein said second position comprises:

a sealing engagement between said sealing o-ring and a seal bore, wherein when in said sealing engagement, said trapped air pressure does not by-pass into or out of said lower fork.

* * * * *