8320194

THE UNITED STATES OF AMERICA

TO ALL TO WHOM THESE PRESENTS SHALL COME:

UNITED STATES DEPARTMENT OF COMMERCE

United States Patent and Trademark Office

November 30, 2022

THIS IS TO CERTIFY THAT ANNEXED IS A TRUE COPY FROM THE RECORDS OF THIS OFFICE OF THE FILE WRAPPER AND CONTENTS OF:

APPLICATION NUMBER: *14/822,859*
FILING DATE: *August 10, 2015*
PATENT NUMBER: *9739331*
ISSUE DATE: *August 22, 2017*

Certified by

Kathi

Performing the Functions and Duties of the
Under Secretary of Commerce
for Intellectual Property
and Director of the United States
Patent and Trademark Office

WAGNER BLECHER LLP
123 Westridge Drive
Watsonville, CA 95076
(408) 377-0500

PATENT APPLICATION

ATTORNEY DOCKET NO. FOX-P5-08-12-US.CON

IN THE UNITED STATES PATENT AND TRADEMARK OFFICE

Anticipated Classification of this application:

Class 188 Subclass 322

Prior Application: 13/890,753

Examiner: SAHNI, VISHAL R

Art Unit: 3657

I hereby certify that this document is being transmitted to the Patent and Trademark Office via electronic filing.

Date of Transmission: 08/10/2015

Typed Name: Emilie Benschoter

Signature: /Emilie Benschoter/

Commissioner For Patents
PO Box 1450
Alexandria, VA 22313-1450

REQUEST FOR A CONTINUING APPLICATION UNDER 37 CFR 1.53(b)

This is a request for filing a continuation application under 37 CFR 1.53(b) a:

- [x] continuation application
- [ ] divisional application of:

Pending Prior Application

Application No.: 13/890,753 **Filed:** May 9, 2013

Title: METHOD AND APPARATUS FOR AN ADJUSTABLE DAMPER

Name of Inventor(s): William M. BECKER

Copy of Application

- [x] Enclosed is the original specification, new claims, and original drawings.
- [ ] Enclosed is a new specification, including new drawings.

Oath or Declaration

- [x] Enclosed is a copy of the prior Declaration (37 CFR 1.63(d)).
- [ ] Enclosed is a newly executed Declaration (original or copy).

Foreign Priority - 35 USC 119

- [ ] Foreign priority under 35 U.S.C 119 has been claimed in prior Application No. _____ filed on _____ in _____
- [ ] The certified copy has been filed in prior Application No. _____
- [ ] A separate paper claiming direct priority to a foreign application is enclosed herewith. A certified copy of the foreign application will be provided in due course.

PATENT APPLICATION

CONTINUING APPLICATION UNDER 37 CFR 1.53(b)
(continued)

ATTORNEY DOCKET NO. FOX-P5-08-12-US.CON

Relate Back - 35 USC 120

Cross Reference To Related Application(s):

[x] continuation [ ] divisional

of copending application number: 13/890,753 Filed On: May 9, 2013

which is hereby incorporated by reference herein.

Inventorship Statement

[ ] Delete the following named individuals as inventors in this application in accordance with 37 CFR 1.53(b) as a result of a change in subject matter: _____

Communications

[x] Address all future communications to: Customer No. 70408

FOX C/O WAGNER BLECHER LLP
123 Westridge Drive
Watsonville, CA 95076
(408) 377-0500

Direct telephone calls to:

John P. Wagner, Jr.
(408) 377-0500

Other Amendments

[ ] Enter the enclosed Preliminary Amendment. The filing fee is calculated on the basis of the amended claims.

Fee Calculation

[x] The filing fee is calculated below for [x] Utility [ ] Design

[x] Other Application Data Sheet Fee$

CLAIMS AS FILED BY OTHER THAN A SMALL ENTITY				
(1) FOR	(2) NUMBER FILED	(3) NUMBER EXTRA	(4) RATE	(5) TOTALS
TOTAL CLAIMS	1 — 20	0	X $80	$ 0.00
INDEPENDENT CLAIMS	1 — 3	0	X $420	$ 0.00
ANY MULTIPLE DEPENDENT CLAIMS			$780	$ 0.00
			BASIC FILING FEE:	$ 1,600.00
			OTHER FEES:	$ 0.00
			TOTAL CHARGES TO DEPOSIT ACCOUNT:	$ 1,600.00

Please charge Deposit Account 50-4157 the sum of $ 1,600.00 . At any time during the pendency of this application, please charge any fees required or credit any over payment to Deposit Account 50-4157 pursuant to 37 CFR 1.25. Additionally charge any fees to Deposit Account 50-4157 under 37 CFR 1.16 through 1.21 inclusive, and any other sections in Title 37 of the Code of Federal Regulations that may regulate fees. A duplicate copy of this sheet is enclosed if transmitted via mail.

Respectfully submitted,
Fox Factory, Inc.

By /John P. Wagner, Jr./

John P. Wagner, Jr.
Attorney/Agent for Applicant(s)
Reg No. : 35,398
Date : 08/10/2015
Telephone : 408-377-0500

DECLARATION FOR UTILITY OR DESIGN APPLICATION

Declaration

As the inventor named below, I hereby declare that my residence, post office address, and citizenship are as stated below my name, *infra*. Further, I hereby declare that I believe I am the original (if only one name is listed below) or an original and joint inventor (if plural names are listed below) of the subject matter that is claimed and for which a patent is sought on the invention entitled:

METHOD AND APPARATUS FOR AN ADJUSTABLE DAMPER

the specification of which:

☐ is filed herewith;

OR

☑ was filed on May 9, 2013 as US Application Serial No. or PCT International Application Number 13/890,753 and was amended on _____ (if applicable).

I hereby state that the above-identified application was made or authorized to be made and filed by me.

I hereby state that I have reviewed and understand the contents of the above-identified specification, including the claims, as amended by any amendment referred to above; and

I hereby acknowledge the duty to disclose information that is material to patentability as defined in Title 37, Code of Federal Regulations, Section 1.56.

Foreign Application(s) and/or Claim of Foreign Priority

I hereby claim foreign priority benefits under Title 35, United States Code, Section 119, of any foreign application(s) for patent or inventor(s) certificate listed below, and I have identified below any foreign application for patent or inventor(s) certificate having a filing date preceding that of the application pursuant to which priority is claimed:

COUNTRY	APPLICATION NUMBER	DATE FILED	PRIORITY CLAIMED UNDER 35 U.S.C. 119
US			YES:____ NO: _____
			YES:____ NO: _____

U.S. Priority Claim

I hereby claim the benefit under Title 35, United States Code, Sections 119(e) and 120, of any United States application(s) listed below, and insofar as the subject matter of each of the claims of this application is not disclosed in the prior United States application in the manner provided by the first paragraph of Title 35, United States Code, Section 112, I acknowledge the duty to disclose information that is material to patentability as defined in Title 37, Code of Federal Regulations, Section 1.56, of which I became aware between the filing date of the prior application and the national or PCT international filing date of this application:

APPLICATION NUMBER	DATE FILED	STATUS
61/644,859	May 9, 2012	Expired

DECLARATION FOR UTILITY OR DESIGN APPLICATION

Signatures

I hereby declare that all statements made herein of my own knowledge are true, that all statements made on information and belief are believed to be true, and that these statements were made with the knowledge that willfully-made false statements, and the like, are punishable by fine or imprisonment, or both, under Section 1001 of Title 18 of the United States Code, and that such willfully-made false statements may jeopardize the validity of the application or any patent issued thereon.

Full Name of Inventor: William M. BECKER **Citizenship:** US

Residence: Aptos, CA US

Post Office Address: 442 Monterey Drive, Aptos, CA 95003

William M. Becker 5/8/15

Inventor's Signature **Date**

WAGNER BLECHER LLP
123 Westridge Drive
Watsonville, CA 95076
(408) 377-0500

PATENT APPLICATION

ATTORNEY DOCKET NO. FOX-P5-08-12-US.CON

IN THE UNITED STATES PATENT AND TRADEMARK OFFICE

Anticipated Classification of this application:

Class 188 Subclass 322

Prior Application: 13/890,753

Examiner: SAHNI, VISHAL R

Art Unit: 3657

I hereby certify that this document is being transmitted to the Patent and Trademark Office via electronic filing.

Date of Transmission: 08/10/2015

Typed Name: Emilie Benschoter

Signature: /Emilie Benschoter/

Commissioner For Patents
PO Box 1450
Alexandria, VA 22313-1450

REQUEST FOR A CONTINUING APPLICATION UNDER 37 CFR 1.53(b)

This is a request for filing a continuation application under 37 CFR 1.53(b) a:

- [x] continuation application
- [ ] divisional application of:

Pending Prior Application

Application No.: 13/890,753 **Filed:** May 9, 2013

Title: METHOD AND APPARATUS FOR AN ADJUSTABLE DAMPER

Name of Inventor(s): William M. BECKER

Copy of Application

- [x] Enclosed is the original specification, new claims, and original drawings.
- [ ] Enclosed is a new specification, including new drawings.

Oath or Declaration

- [x] Enclosed is a copy of the prior Declaration (37 CFR 1.63(d)).
- [ ] Enclosed is a newly executed Declaration (original or copy).

Foreign Priority - 35 USC 119

- [ ] Foreign priority under 35 U.S.C 119 has been claimed in prior Application No. _____ filed on _____ in _____
- [ ] The certified copy has been filed in prior Application No. _____
- [ ] A separate paper claiming direct priority to a foreign application is enclosed herewith. A certified copy of the foreign application will be provided in due course.

PATENT APPLICATION

CONTINUING APPLICATION UNDER 37 CFR 1.53(b)
(continued)

ATTORNEY DOCKET NO. FOX-P5-08-12-US.CON

Relate Back - 35 USC 120

Cross Reference To Related Application(s):

[x] continuation [ ] divisional

of copending application number: 13/890,753 Filed On: May 9, 2013

which is hereby incorporated by reference herein.

Inventorship Statement

[ ] Delete the following named individuals as inventors in this application in accordance with 37 CFR 1.53(b) as a result of a change in subject matter: _____

Communications

[x] Address all future communications to: Customer No. 70408

FOX C/O WAGNER BLECHER LLP
123 Westridge Drive
Watsonville, CA 95076
(408) 377-0500

Direct telephone calls to:

John P. Wagner, Jr.
(408) 377-0500

Other Amendments

[ ] Enter the enclosed Preliminary Amendment. The filing fee is calculated on the basis of the amended claims.

Fee Calculation

[x] The filing fee is calculated below for [x] Utility [ ] Design

[x] Other Application Data Sheet Fee$

CLAIMS AS FILED BY OTHER THAN A SMALL ENTITY				
(1) FOR	(2) NUMBER FILED	(3) NUMBER EXTRA	(4) RATE	(5) TOTALS
TOTAL CLAIMS	1 — 20	0	X $80	$ 0.00
INDEPENDENT CLAIMS	1 — 3	0	X $420	$ 0.00
ANY MULTIPLE DEPENDENT CLAIMS			$780	$ 0.00
			BASIC FILING FEE:	$ 1,600.00
			OTHER FEES:	$ 0.00
			TOTAL CHARGES TO DEPOSIT ACCOUNT:	$ 1,600.00

Please charge Deposit Account 50-4157 the sum of $ 1,600.00 . At any time during the pendency of this application, please charge any fees required or credit any over payment to Deposit Account 50-4157 pursuant to 37 CFR 1.25. Additionally charge any fees to Deposit Account 50-4157 under 37 CFR 1.16 through 1.21 inclusive, and any other sections in Title 37 of the Code of Federal Regulations that may regulate fees. A duplicate copy of this sheet is enclosed if transmitted via mail.

Respectfully submitted,
Fox Factory, Inc.

By /John P. Wagner, Jr./

John P. Wagner, Jr.
Attorney/Agent for Applicant(s)
Reg No. : 35,398
Date : 08/10/2015
Telephone : 408-377-0500

PTO/AIA/82A (07-12)
Approved for use through 11/30/2014. OMB 0651-0035
U.S. Patent and Trademark Office; U.S. DEPARTMENT OF COMMERCE
Under the Paperwork Reduction Act of 1995, no persons are required to respond to a collection of information unless it displays a valid OMB control number.

TRANSMITTAL FOR POWER OF ATTORNEY TO ONE OR MORE REGISTERED PRACTITIONERS

NOTE: This form is to be submitted with the Power of Attorney by Applicant form (PTO/AIA/82B or equivalent) to identify the application to which the Power of Attorney is directed, in accordance with 37 CFR 1.5. If the Power of Attorney by Applicant form is not accompanied by this transmittal form or an equivalent, the Power of Attorney will not be recognized in the application.

Application Number	TBD
Filing Date	08/10/2015
First Named Inventor	William M. BECKER
Title	METHOD AND APPARATUS FOR AN ADJUSTABLE DAMPER
Art Unit	TBD
Examiner Name	
Attorney Docket Number	FOX-P5-08-12-US.CON

SIGNATURE of Applicant or Patent Practitioner

Signature	/John P. Wagner, Jr./	Date	08/10/2015
Name	John P. Wagner, Jr.	Telephone	408-377-0500
Registration Number	35,398		

NOTE: This form must be signed in accordance with 37 CFR 1.33. See 37 CFR 1.4(d) for signature requirements and certifications.

☐ *Total of _____ forms are submitted.

This collection of information is required by 37 CFR 1.31, 1.32 and 1.33. The information is required to obtain or retain a benefit by the public which is to file (and by the USPTO to process) an application. Confidentiality is governed by 35 U.S.C. 122 and 37 CFR 1.11 and 1.14. This collection is estimated to take 3 minutes to complete, including gathering, preparing, and submitting the completed application form to the USPTO. Time will vary depending upon the individual case. Any comments on the amount of time you require to complete this form and/or suggestions for reducing this burden, should be sent to the Chief Information Officer, U.S. Patent and Trademark Office, U.S. Department of Commerce, P.O. Box 1450, Alexandria, VA 22313-1450. DO NOT SEND FEES OR COMPLETED FORMS TO THIS ADDRESS. **SEND TO: Commissioner for Patents, P.O. Box 1450, Alexandria, VA 22313-1450.**

If you need assistance in completing the form, call 1-800-PTO-9199 and select option 2.

Doc Code: PA..
Document Description: Power of Attorney

PTO/AIA/82B(07-12)
Approved for use through 11/30/2014. OMB 0651-0035
U.S. Patent and Trademark Office; U.S. DEPARTMENT OF COMMERCE
Under the Paperwork Reduction Act of 1995, no persons are required to respond to a collection of information unless it displays a valid OMB control number.

POWER OF ATTORNEY BY APPLICANT

I hereby revoke all previous powers of attorney given in the application identified in the attached transmittal letter.

[x] I hereby appoint Practitioner(s) associated with the following Customer Number as my/our attorney(s) or agent(s), and to transact all business in the United States Patent and Trademark Office connected therewith for the application referenced in the attached transmittal letter (form PTO/AIA/82A or equivalent): 70408

OR

[ ] I hereby appoint Practitioner(s) named below as my/our attorney(s) or agent(s), and to transact all business in the United States Patent and Trademark Office connected therewith for the application referenced in the attached transmittal letter (form PTO/AIA/82A or equivalent):

Name	Registration Number	Name	Registration Number

Please recognize or change the correspondence address for the application identified in the attached transmittal letter to:

[x] The address associated with the above-mentioned Customer Number.

OR

[ ] The address associated with Customer Number:

OR

[ ] Firm or Individual Name					
Address					
City		State		Zip	
Country					
Telephone		Email			

I am the Applicant:

[ ] Inventor or Joint Inventor

[ ] Legal Representative of a Deceased or Legally Incapacitated Inventor

[x] Assignee or Person to Whom the Inventor is Under an Obligation to Assign

[ ] Person Who Otherwise Shows Sufficient Proprietary Interest (*e.g.*, a petition under 37 CFR 1.46(b)(2) was granted in the application or is concurrently being filed with this document)

SIGNATURE of Applicant for Patent

Signature		Date	8/29/13
Name	David M. Haugen	Telephone	831 274 8336
Title and Company	Vice President / General Counsel, Fox Factory Inc.		

NOTE: Signature - This form must be signed by the applicant in accordance with 37 CFR 1.33. See 37 CFR 1.4 for signature requirements and certifications. Submit multiple forms for more than one signature, see below *.

[ ] *Total of _____ forms are submitted.

This collection of information is required by 37 CFR 1.31, 1.32 and 1.33. The information is required to obtain or retain a benefit by the public which is to file (and by the USPTO to process) an application. Confidentiality is governed by 35 U.S.C. 122 and 37 CFR 1.11 and 1.14. This collection is estimated to take 3 minutes to complete, including gathering, preparing, and submitting the completed application form to the USPTO. Time will vary depending upon the individual case. Any comments on the amount of time you require to complete this form and/or suggestions for reducing this burden, should be sent to the Chief Information Officer, U.S. Patent and Trademark Office, U.S. Department of Commerce, P.O. Box 1450, Alexandria, VA 22313-1450. DO NOT SEND FEES OR COMPLETED FORMS TO THIS ADDRESS. **SEND TO: Commissioner for Patents, P.O. Box 1450, Alexandria, VA 22313-1450.**

If you need assistance in completing the form, call 1-800-PTO-9199 and select option 2.

UNITED STATES PATENT APPLICATION

FOR

METHOD AND APPARATUS FOR AN ADJUSTABLE DAMPER

Inventor:

William M. Becker

Prepared by:

Wagner Blecher LLP

123 Westridge Drive

Watsonville, CA 95076

FOX-P5-08-12-US.CON

METHOD AND APPARATUS FOR AN ADJUSTABLE DAMPER

CROSS-REFERENCE TO RELATED APPLICATIONS

[0001] This application is a continuation and claims priority to and the benefit of co-pending U.S. Patent Application No. 13/890,753 filed on May 9, 2013 entitled "METHOD AND APPARATUS FOR AN ADJUSTABLE DAMPER" by William M. Becker, having Attorney Docket No. FOX-P5-08-12-US and assigned to the assignee of the present application; U.S. Patent Application No. 13/890,753 is herein incorporated by reference in its entirety.

[0002] U.S. Patent Application 13/890,753 claims the benefit of and claims priority of United States provisional patent application serial number 61/644,859, filed on May 9, 2012, entitled "METHODS AND APPARATUS FOR PRESSURE EQUALIZATION" by William M. Becker, assigned to the assignee of the present application, having Attorney Docket No. FOX-P5-08-12.PRO, and is hereby incorporated by reference in its entirety herein.

BACKGROUND

Field of the Invention

[0003] Embodiments of the invention generally relate to methods and apparatuses for use in suspension components. Particular embodiments of the invention relate to method and apparatus useful for equalizing ambient pressure within vehicle suspension.

Description of the Related Art

[0004] Vehicle suspension systems typically include a spring component or components and a dampening component or components. Typically, mechanical springs, like helical springs are used with some type of viscous fluid-based

dampening mechanism and the two are mounted functionally in parallel. In some instances, a spring may comprise pressurized gas and features of the damper or spring are user-adjustable, such as by adjusting the air pressure in a gas spring. A damper may be constructed by placing a damping piston in a fluid-filled cylinder (e.g., liquid such as oil). As the damping piston is moved in the cylinder, fluid is compressed and passes from one side of the piston to the other side. Often, the piston includes vents there-through which may be covered by shim stacks to provide for different operational characteristics in compression or extension.

[0005] Ambient air pressure at the time of building a suspension fork is sealed inside the fork legs. When the fork is assembled at low elevation and then taken to ride at high elevations, the air pressure sealed in the lower leg, because of the decreased high elevation exterior air pressure and corresponding differential pressure, adds pressure and load to the seal, which ultimately creates significantly higher axial friction in the telescoping suspension fork.

[0006] As the foregoing illustrates, what is needed in the art are improved techniques for lowering equalizing ambient pressure within a vehicle suspension.

BRIEF DESCRIPTION OF THE DRAWINGS

[0007] **FIG. 1** depicts a front bicycle fork, in accordance with an embodiment.

[0008] **FIG. 2** depicts a cross-sectional view of the air bleed assembly and the vent hole between the seal and the upper busing, in accordance with an embodiment.

[0009] **FIG. 3** depicts a perspective view of the air bleed assembly, in accordance with an embodiment.

[0010] **FIG. 4** depicts a positioning of the air bleed assembly relative to the oil bath lubrication in the lower leg/shock tube, in accordance with an embodiment.

[0011] The drawings referred to in this description should be understood as not being drawn to scale except if specifically noted.

FOX_0000293
SRAM EXHIBIT 1004, PAGE 13 OF 266

BRIEF DESCRIPTION

[0012] Reference will now be made in detail to embodiments of the present technology, examples of which are illustrated in the accompanying drawings. While the technology will be described in conjunction with various embodiment(s), it will be understood that they are not intended to limit the present technology to these embodiments. On the contrary, the present technology is applicable to alternative embodiments, modifications and equivalents, which may be included within the spirit and scope of the invention as defined by the appended claims.

[0013] One embodiment hereof comprises a shock absorber for a vehicle. In one embodiment, the vehicle is a bicycle. The shock absorber, for example, a front fork **100** as shown in **FIG. 1**, is advantageous because it includes a damper **118/114** (lower fork tube and upper fork tube, respectively, of the damper leg) having a manually adjustable damping resistance. In one embodiment, the manually adjustable damping function allows a user to adjust a "platform" threshold which must be exceeded before the shock absorber can experience significant compression travel. It allows the user to establish a level, in one embodiment, for compression damping whereby such damping is increased or decreased selectively.

[0014] U.S. Patent No. 6,135,434, which patent is herein incorporated by reference in its entirety, shows certain variations of positive and negative spring mechanisms. Another selectively variable damping mechanism is shown in U.S. Patent No. 6,360,857, which patent is herein incorporated by reference in its entirety. Optionally, any of the foregoing mechanisms may be integrated, or used in combination, with any other features disclosed herein.

[0015] U.S. Patent Nos. 6,415,895, 6,296,092, 6,978,872 and 7,308,976, each of which patents is herein incorporated by reference in its entirety, show certain variations of position sensitive damping mechanisms. Another position sensitive damping mechanism is shown in U.S. Patent No. 7,374,028, which patent is herein incorporated by reference in its entirety. Another position sensitive damping mechanism is shown in U.S. Patent No. 5,190,126, which patent is herein incorporated by reference in its entirety. Optionally, any of the foregoing mechanisms may be integrated, or used in combination, with any other features disclosed herein.

[0016] U.S. Patent Nos. 6,581,948, 7,273,137, 7,261,194, 7,128,192, and 6,604,751, each of which patents is herein incorporated by reference in its entirety, show certain variations of inertia valve mechanisms for controlling aspects of compression damping. Additionally, U.S. Published patent Application Nos. 2008/0053768 A1, 2008/0053767 A1, 2008/0035439 A1, 2008/0007017 A1, 2007/0296163 A1, 2007/0262555 A1, 2007/0228691 A1, 2007/0228690 A1, 2007/0227845 A1, 2007/0227844 A1, 2007/0158927 A1, 2007/0119670 A1, 2007/0068751 A1, 2007/0012531 A1, 2006/0065496 A1, each of which patent applications is herein incorporated by reference in its entirety, show certain variations of inertia valve mechanisms for controlling aspects of compression damping. Optionally, any of the foregoing inertia valve mechanisms or other features may be integrated, or used in combination, with any other features disclosed herein. A shock absorber or fork may be equipped, for example, with an inertia valve for controlling an aspect of damping and a position sensitive valve for controlling another aspect of damping.

[0017] **FIG. 1**, **FIG. 3**, and **FIG. 4**, show suspension fork legs, either or both of which would, in one embodiment, comprise portions of a bicycle fork (or motorcycle

fork). During operation, the damper leg of the fork is subject to compression and rebound loads. The compression is induced by disparities in the terrain being traversed by a vehicle equipped with the fork. The rebound is induced by a spring (e.g. gas spring, mechanical spring, coil – not shown but for example in leg **104/108**), preferably located in another leg of the fork, which stores energy during compression of the fork and then releases that energy when the disparity is passed. The energy is released in urging the suspension unit to elongate axially following the axial compression during which the energy is stored. The top cap **103** and its connected parts move with the upper fork tube **114** and **108** during compression and rebound and the lower nut assembly **101** and its connected parts move with the lower fork tube **104** or **118**.

[0018] Movement of the upper fork tube (e.g., **114**) relative to the lower fork tube (e.g., **118**) causes a piston assembly to move axially within the damper body. During a compression stroke, the piston assembly moves downward in the damper body and thereby reduces the volume of the compression chamber. As fluid is displaced from the compression chamber, some of it flows through passages and deflects a one way shim valve to enter the rebound chamber. Some of the displaced fluid flows through an orifice into a reservoir. The resistance to movement of fluid from the compression chamber, through passages (and shim valve on piston) and the orifice provide compression damping for the suspension unit in which the damper cartridge is included.

[0019] Ambient air pressure at the time of building a suspension fork is "sealed" inside the upper leg/lower leg assembly (e.g., upper fork tube **114** telescopically positioned within lower fork tube **118**). In one embodiment, it is preferred that the air pressure within the assembly at static (unloaded) extension be substantially equal to ambient exterior air pressure so that there is no net differential pressure acting

across the lower leg seal **135** (see **FIG. 3**). Suspension forks are often ridden at many different elevations, however, and the ambient air pressure reduces (decreases) as a function of increasing elevation (and increases at lower elevations).

[0020] Air pressure above sea level can be calculated as:

$$P=1091325(1-2.2577\ 10^{-5}\ h)^{5.25588}$$

Where p=pressure absolute and h=altitude above sea level.

[0021] The typical ambient air pressure at 8,000 ft. elevation is 3.80 psi lower than the trapped air pressure inside the fork. The typical ambient air pressure at 10,000 ft. elevation is 4.60 psi lower than the trapped air pressure inside the fork. (http://www.engineeringtoolbox.com/air-altitude-pressure-d 462.html.)

[0022] When a fork is assembled at low elevation and then taken to ride at high elevations, the "sealed lower leg air pressure", because of the now decreased high elevation exterior air pressure and corresponding differential pressure, adds pressure and load to the lower oil control lip of the seal which creates significantly higher axial friction in a telescoping suspension fork.

[0023] The presently disclosed system allows a rider to push a button and let the pressure in the lower leg equalize to ambient pressure at high elevation and therefore restore a lower-friction fork. Generally, it is important to seal a fork to prevent the lower leg oil bath lubrication from leaking out of the fork. In one embodiment, the air bleed assembly **300** (of **FIG. 4**) is located right below the lower leg seal **135** so that when excessive air pressure in the fork is relieved at high elevation, the oil bath **140** typically leveled in the lower leg (typically 20-50cc) does

not spray/leak out. In other words, a substantial portion (most of the oil bath **140**), if not all, of the oil bath **140** remains within the lower leg (and does not spray/leak out of the lower leg) when the air bleed assembly **300** is opened to release excessive air pressure from the fork.

[0024] **FIG. 3** shows the air bleed assembly **300** including button **150** positioned on a die-cast feature of the lower leg. Pressing the button **150** equalizes the air pressure in the fork/shock assembly with the local ambient air pressure.

[0025] **FIG. 2** shows a cross-section of the air bleed assembly **300** and the vent hole **154** between the seal (not shown) and the upper bushing **120** (or behind foam ring **125**). When the button **150** is pressed, the sealing o-ring **151** moves into the diametrical recess **152** and thereby becomes unsealed, letting the air pressure by-pass into or out of the fork leg via vent hole **154** to equalize the pressure in the fork leg with an exterior pressure. When the button **150** is released, a spring **153**, which biases the button/valve **150** toward a closed position, urges the o-ring **151** into a sealing engagement with a seal bore **155**.

[0026] **FIG. 4** shows positioning of the air bleed assembly **300** relative to the "oil bath" lubrication in the lower leg/shock tube.

[0027] It should be noted that any of the features disclosed herein may be useful alone or in any suitable combination. While the foregoing is directed to embodiments of the present invention, other and further embodiments of the invention may be implemented without departing from the scope of the invention, and the scope thereof is determined by the claims that follow.

Claims:

1. An air bleed system for a suspension fork or shock absorber comprising:

a fluid passage between an interior of the suspension and an exterior of the suspension; and

a manually operable valve having a first position substantially closing said fluid passage and a second position allowing a fluid to flow between said interior and said exterior.

METHOD AND APPARATUS FOR AN ADJUSTABLE DAMPER

ABSTRACT

An air bleed system for a suspension fork or shock absorber includes: a fluid passage between an interior of the suspension and an exterior of the suspension; and a manually operable valve having a first position substantially closing the fluid passage and a second position allowing fluid flow between the interior and the exterior.

FOX_0000300
SRAM EXHIBIT 1004, PAGE 20 OF 266

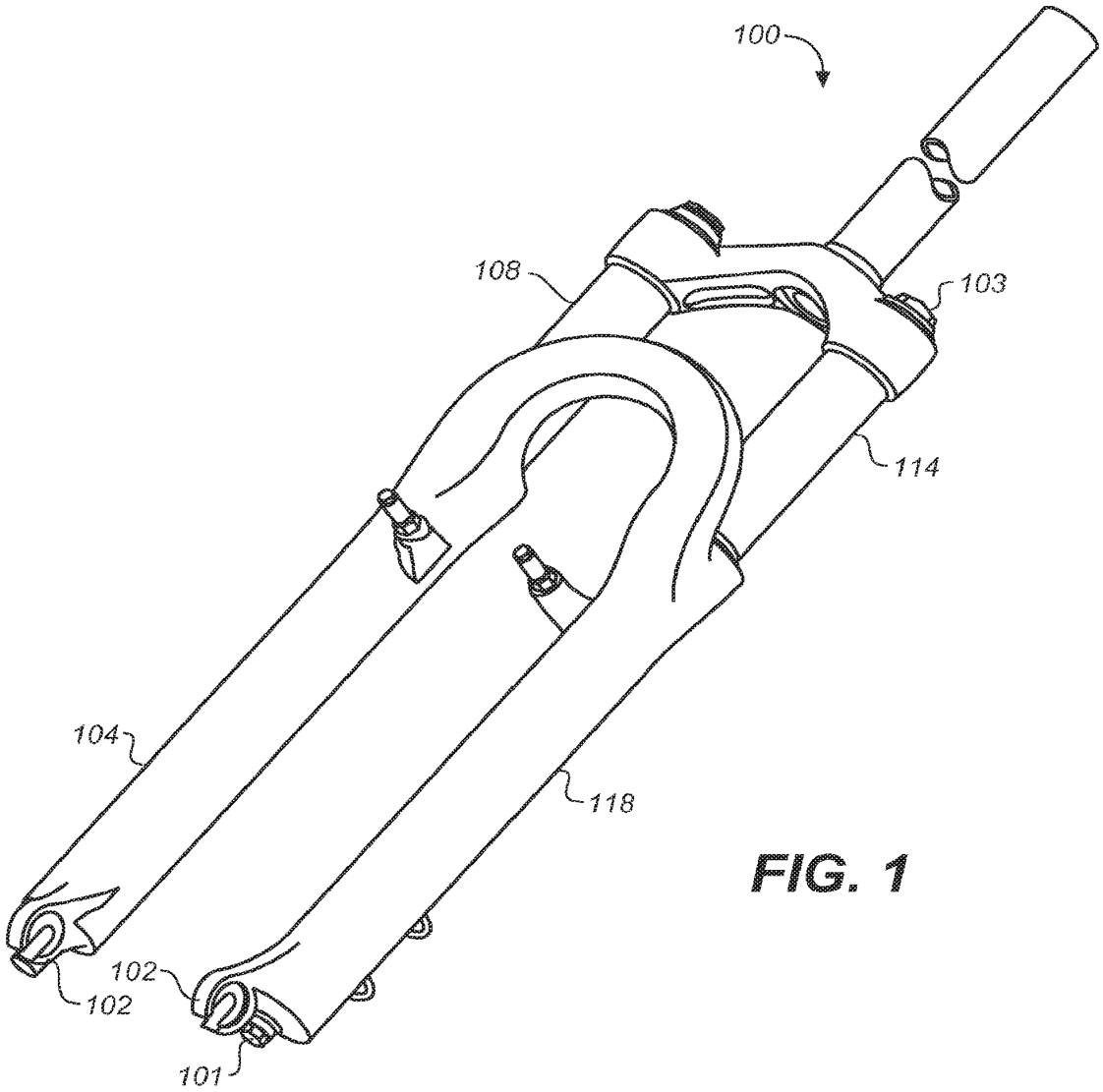

FIG. 1

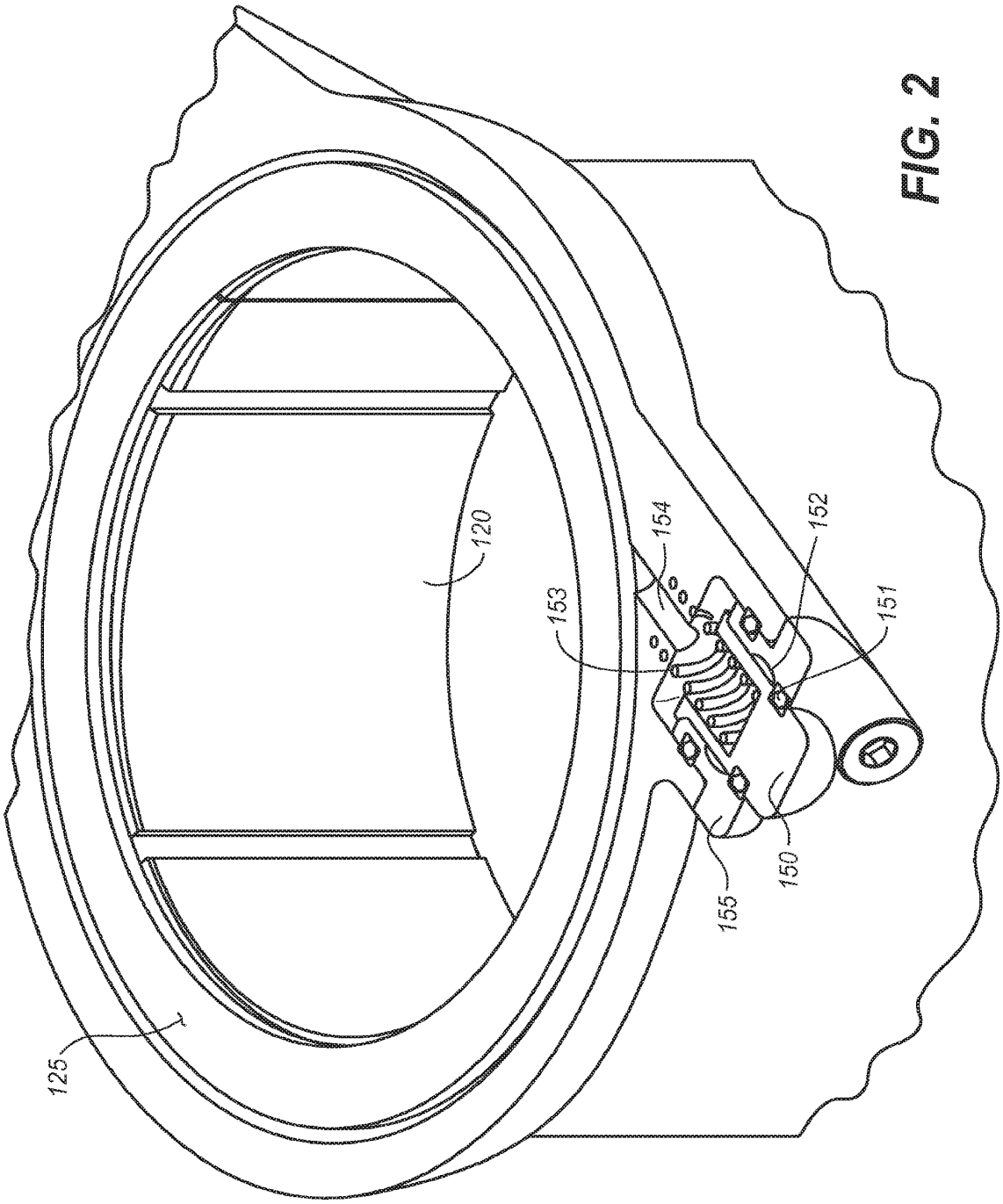

FIG. 2

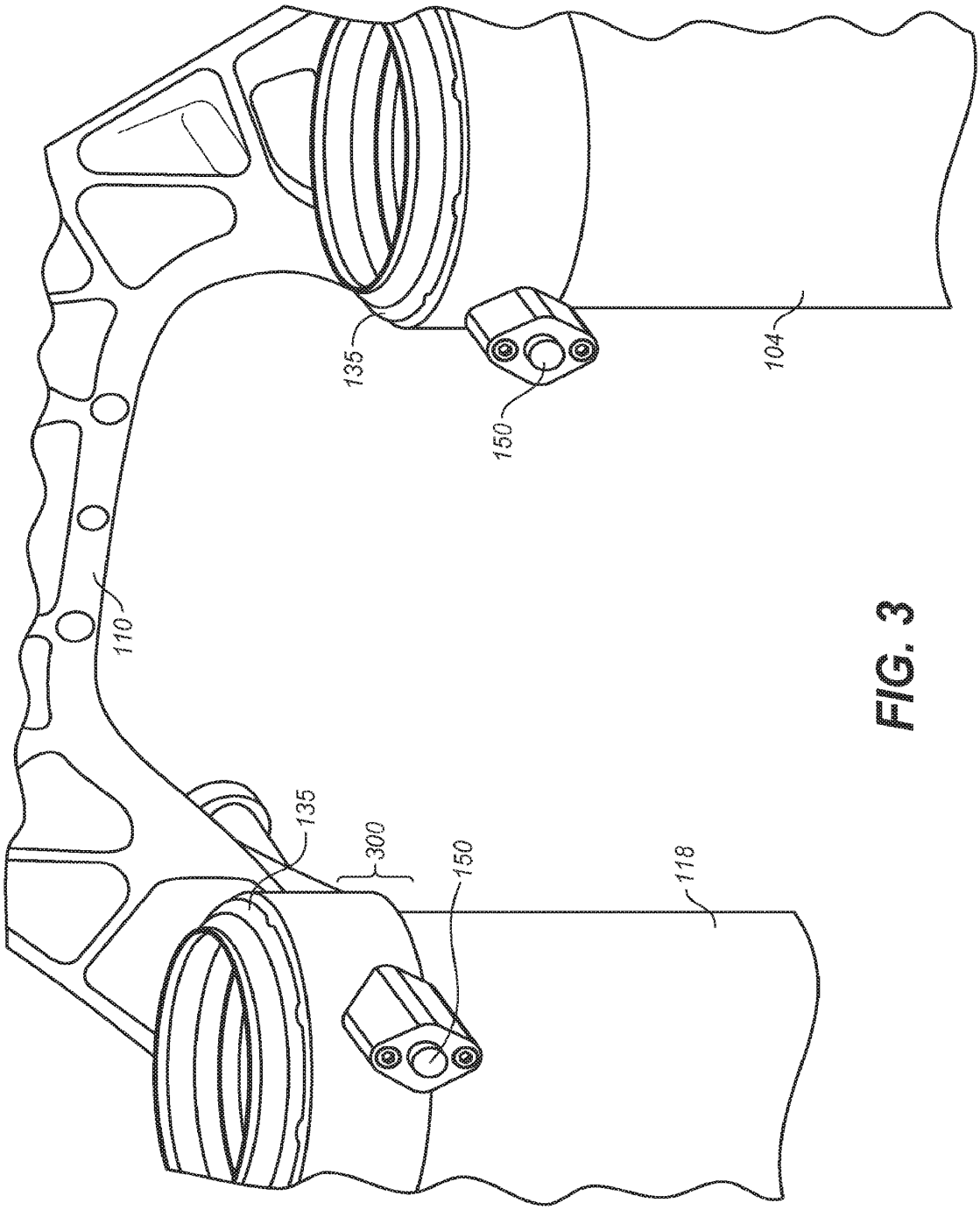

FIG. 3

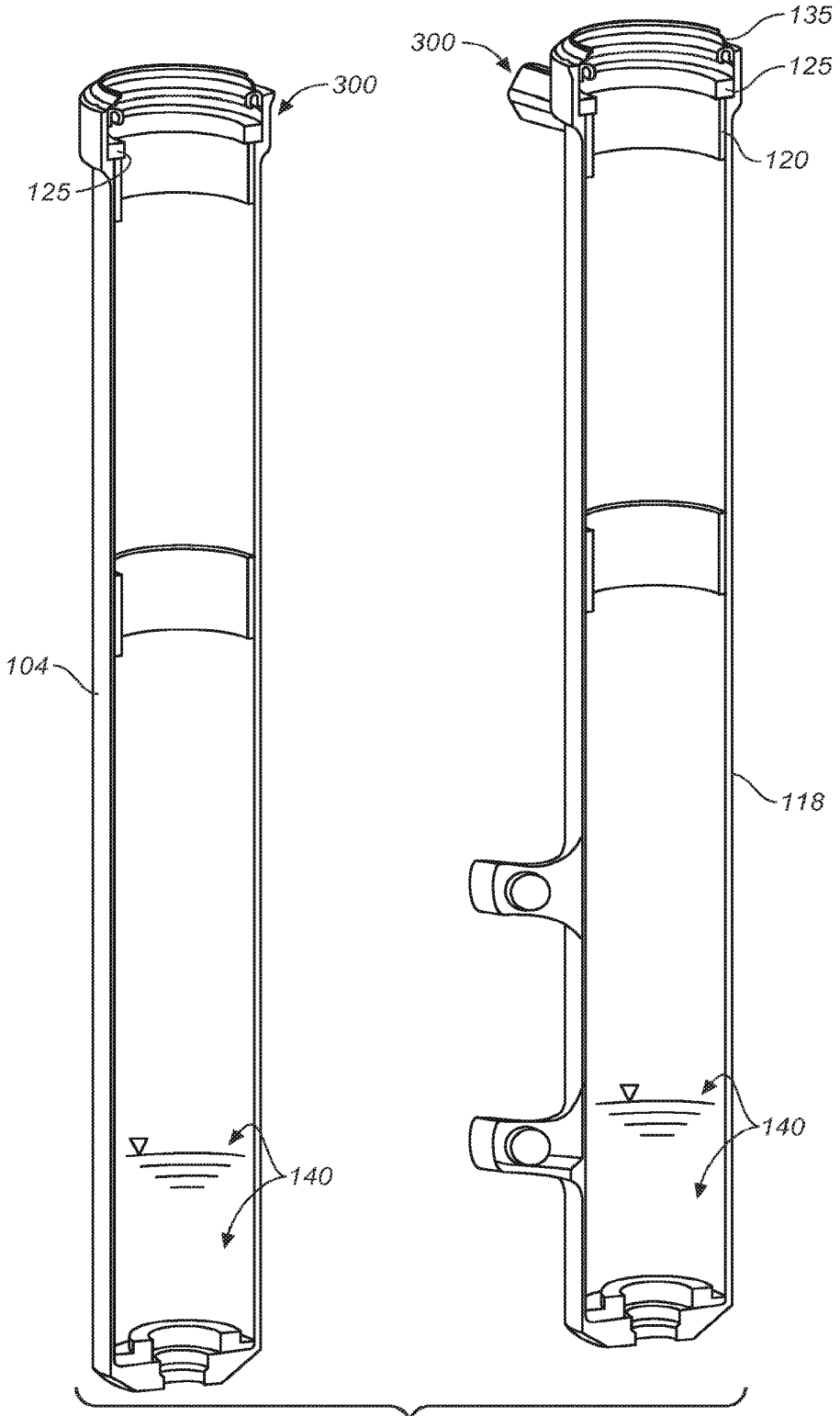

FIG. 4

Electronic Patent Application Fee Transmittal

Application Number:	
Filing Date:	
Title of Invention:	METHOD AND APPARATUS FOR AN ADJUSTABLE DAMPER
First Named Inventor/Applicant Name:	William M. Becker
Filer:	John Paul Wagner Jr./Emilie Benschoter
Attorney Docket Number:	FOX-P5-08-12-US.CON

Filed as Large Entity

Filing Fees for Utility under 35 USC 111(a)

Description	Fee Code	Quantity	Amount	Sub-Total in USD($)
Basic Filing:				
Utility application filing	1011	1	280	280
Utility Search Fee	1111	1	600	600
Utility Examination Fee	1311	1	720	720
Pages:				
Claims:				
Miscellaneous-Filing:				
Petition:				
Patent-Appeals-and-Interference:				

Description	Fee Code	Quantity	Amount	Sub-Total in USD($)
Post-Allowance-and-Post-Issuance:				
Extension-of-Time:				
Miscellaneous:				
		Total in USD ($)		**1600**

Electronic Acknowledgement Receipt	
EFS ID:	23169960
Application Number:	14822859
International Application Number:	
Confirmation Number:	6345
Title of Invention:	METHOD AND APPARATUS FOR AN ADJUSTABLE DAMPER
First Named Inventor/Applicant Name:	William M. Becker
Customer Number:	70408
Filer:	John Paul Wagner Jr./Emilie Benschoter
Filer Authorized By:	John Paul Wagner Jr.
Attorney Docket Number:	FOX-P5-08-12-US.CON
Receipt Date:	10-AUG-2015
Filing Date:	
Time Stamp:	22:19:25
Application Type:	Utility under 35 USC 111(a)

Payment information:

Submitted with Payment	yes
Payment Type	Deposit Account
Payment was successfully received in RAM	$1600
RAM confirmation Number	7451
Deposit Account	504157
Authorized User	BENSCHOTER, EMILIE
The Director of the USPTO is hereby authorized to charge indicated fees and credit any overpayment as follows: Charge any Additional Fees required under 37 C.F.R. Section 1.16 (National application filing, search, and examination fees) Charge any Additional Fees required under 37 C.F.R. Section 1.17 (Patent application and reexamination processing fees)	

Charge any Additional Fees required under 37 C.F.R. Section 1.19 (Document supply fees)

Charge any Additional Fees required under 37 C.F.R. Section 1.20 (Post Issuance fees)

Charge any Additional Fees required under 37 C.F.R. Section 1.21 (Miscellaneous fees and charges)

File Listing:

Document Number	Document Description	File Name	File Size(Bytes)/ Message Digest	Multi Part /.zip	Pages (if appl.)
1	Application Data Sheet	FOX_P5_08_12_US_CON_ADS.pdf	1882222 63401c7e883a2dfa09c31b91fd7a319023da320e	no	5
Warnings:					
Information:					
2		FOX_P5_08_12_US_CON_APP_20150810.pdf	1603837 fdce21fc0cb771f2500d44270cca74d5364e225f	yes	21

Multipart Description/PDF files in .zip description

Document Description	Start	End
Transmittal of New Application	1	2
Oath or Declaration filed	3	4
Power of Attorney	5	6
Specification	7	15
Claims	16	16
Abstract	17	17
Drawings-only black and white line drawings	18	21

Warnings:					
Information:					
3	Fee Worksheet (SB06)	fee-info.pdf	35252 91c32c8a89196e77e30430d4e3fd30eebeb8f0bf	no	2
Warnings:					
Information:					
			Total Files Size (in bytes):	3521311	

This Acknowledgement Receipt evidences receipt on the noted date by the USPTO of the indicated documents, characterized by the applicant, and including page counts, where applicable. It serves as evidence of receipt similar to a Post Card, as described in MPEP 503.

New Applications Under 35 U.S.C. 111
If a new application is being filed and the application includes the necessary components for a filing date (see 37 CFR 1.53(b)-(d) and MPEP 506), a Filing Receipt (37 CFR 1.54) will be issued in due course and the date shown on this Acknowledgement Receipt will establish the filing date of the application.

National Stage of an International Application under 35 U.S.C. 371
If a timely submission to enter the national stage of an international application is compliant with the conditions of 35 U.S.C. 371 and other applicable requirements a Form PCT/DO/EO/903 indicating acceptance of the application as a national stage submission under 35 U.S.C. 371 will be issued in addition to the Filing Receipt, in due course.

New International Application Filed with the USPTO as a Receiving Office
If a new international application is being filed and the international application includes the necessary components for an international filing date (see PCT Article 11 and MPEP 1810), a Notification of the International Application Number and of the International Filing Date (Form PCT/RO/105) will be issued in due course, subject to prescriptions concerning national security, and the date shown on this Acknowledgement Receipt will establish the international filing date of the application.

PTO/AIA/14 (08-12)
Approved for use through 01/31/2014. OMB 0651-0032
U.S. Patent and Trademark Office; U.S. DEPARTMENT OF COMMERCE
Under the Paperwork Reduction Act of 1995, no persons are required to respond to a collection of information unless it contains a valid OMB control number.

Application Data Sheet 37 CFR 1.76	Attorney Docket Number	FOX-P5-08-12-US.CON
	Application Number	
Title of Invention	METHOD AND APPARATUS FOR AN ADJUSTABLE DAMPER	

The application data sheet is part of the provisional or nonprovisional application for which it is being submitted. The following form contains the bibliographic data arranged in a format specified by the United States Patent and Trademark Office as outlined in 37 CFR 1.76.
This document may be completed electronically and submitted to the Office in electronic format using the Electronic Filing System (EFS) or the document may be printed and included in a paper filed application.

Secrecy Order 37 CFR 5.2

☐ Portions or all of the application associated with this Application Data Sheet may fall under a Secrecy Order pursuant to 37 CFR 5.2 (Paper filers only. Applications that fall under Secrecy Order may not be filed electronically.)

Inventor Information:

Inventor 1 Remove

Legal Name

Prefix	Given Name	Middle Name	Family Name	Suffix
	William	M.	Becker	

Residence Information (Select One) ◉ US Residency ◯ Non US Residency ◯ Active US Military Service

City	Aptos	State/Province	CA	Country of Residence i	US

Mailing Address of Inventor:

Address 1	442 Monterey Drive		
Address 2			
City	Aptos	State/Province	CA
Postal Code	95003	Country i	US

All Inventors Must Be Listed - Additional Inventor Information blocks may be generated within this form by selecting the **Add** button. Add

Correspondence Information:

Enter either Customer Number or complete the Correspondence Information section below.
For further information see 37 CFR 1.33(a).

☐ **An Address is being provided for the correspondence Information of this application.**

Customer Number	70408		
Email Address	patents@wagnerblecher.com	Add Email	Remove Email

Application Information:

Title of the Invention	METHOD AND APPARATUS FOR AN ADJUSTABLE DAMPER		
Attorney Docket Number	FOX-P5-08-12-US.CON	Small Entity Status Claimed	☐
Application Type	Nonprovisional		
Subject Matter	Utility		
Suggested Class (if any)		Sub Class (if any)	
Suggested Technology Center (if any)			
Total Number of Drawing Sheets (if any)	4	Suggested Figure for Publication (if any)	

Under the Paperwork Reduction Act of 1995, no persons are required to respond to a collection of information unless it contains a valid OMB control number.

Application Data Sheet 37 CFR 1.76	Attorney Docket Number	FOX-P5-08-12-US.CON
	Application Number	
Title of Invention	METHOD AND APPARATUS FOR AN ADJUSTABLE DAMPER	

Publication Information:

☐	Request Early Publication (Fee required at time of Request 37 CFR 1.219)
☐	**Request Not to Publish.** I hereby request that the attached application not be published under 35 U.S.C. 122(b) and certify that the invention disclosed in the attached application **has not and will not** be the subject of an application filed in another country, or under a multilateral international agreement, that requires publication at eighteen months after filing.

Representative Information:

Representative information should be provided for all practitioners having a power of attorney in the application. Providing this information in the Application Data Sheet does not constitute a power of attorney in the application (see 37 CFR 1.32).
Either enter Customer Number or complete the Representative Name section below. If both sections are completed the customer Number will be used for thr Representative Information during processing.

Please Select One:	◉ Customer Number	◯ US Patent Practitioner	◯ Limited Recognition (37 CFR 11.9)
Customer Number	70408		

Domestic Benefit/National Stage Information:

This section allows for the applicant to either claim benefit under 35 U.S.C. 119(e), 120, 121, or 365(c) or indicate National Stage entry from a PCT application. Providing this information in the application data sheet constitutes the specific reference required by 35 U.S.C. 119(e) or 120, and 37 CFR 1.78.

Prior Application Status	Pending		Remove
Application Number	Continuity Type	Prior Application Number	Filing Date (YYYY-MM-DD)
TBD	Continuation of	13890753	2013-05-09
Prior Application Status	Expired		Remove
Application Number	Continuity Type	Prior Application Number	Filing Date (YYYY-MM-DD)
13890753	non provisional of	61644859	2012-05-09

Additional Domestic Benefit/National Stage Data may be generated within this form by selecting the **Add** button. Add

Foreign Priority Information:

This section allows for the applicant to claim benefit of foreign priority and to identify any prior foreign application for which priority is not claimed. Providing this information in the application data sheet constitutes the claim for priority as required by 35 U.S.C. 119(b) and 37 CFR 1.55(a).

Remove

Application Number	Country i	Filing Date (YYYY-MM-DD)	Priority Claimed
			◯ Yes ◉ No

Additional Foreign Priority Data may be generated within this form by selecting the **Add** button. Add

Application Data Sheet 37 CFR 1.76	Attorney Docket Number	FOX-P5-08-12-US.CON
	Application Number	
Title of Invention	METHOD AND APPARATUS FOR AN ADJUSTABLE DAMPER	

Authorization to Permit Access:

☐ Authorization to Permit Access to the Instant Application by the Participating Offices

If checked, the undersigned hereby grants the USPTO authority to provide the European Patent Office (EPO), the Japan Patent Office (JPO), the Korean Intellectual Property Office (KIPO), the World Intellectual Property Office (WIPO), and any other intellectual property offices in which a foreign application claiming priority to the instant patent application is filed access to the instant patent application. See 37 CFR 1.14(c) and (h). This box should not be checked if the applicant does not wish the EPO, JPO, KIPO, WIPO, or other intellectual property office in which a foreign application claiming priority to the instant patent application is filed to have access to the instant patent application.

In accordance with 37 CFR 1.14(h)(3), access will be provided to a copy of the instant patent application with respect to: 1) the instant patent application-as-filed; 2) any foreign application to which the instant patent application claims priority under 35 U.S.C. 119(a)-(d) if a copy of the foreign application that satisfies the certified copy requirement of 37 CFR 1.55 has been filed in the instant patent application; and 3) any U.S. application-as-filed from which benefit is sought in the instant patent application.

In accordance with 37 CFR 1.14(c), access may be provided to information concerning the date of filing this Authorization.

Applicant Information:

Providing assignment information in this section does not substitute for compliance with any requirement of part 3 of Title 37 of CFR to have an assignment recorded by the Office.

Applicant 1

If the applicant is the inventor (or the remaining joint inventor or inventors under 37 CFR 1.45), this section should not be completed. The information to be provided in this section is the name and address of the legal representative who is the applicant under 37 CFR 1.43; or the name and address of the assignee, person to whom the inventor is under an obligation to assign the invention, or person who otherwise shows sufficient proprietary interest in the matter who is the applicant under 37 CFR 1.46. If the applicant is an applicant under 37 CFR 1.46 (assignee, person to whom the inventor is obligated to assign, or person who otherwise shows sufficient proprietary interest) together with one or more joint inventors, then the joint inventor or inventors who are also the applicant should be identified in this section.

Remove

◉ Assignee	○ Legal Representative under 35 U.S.C. 117
○ Person to whom the inventor is obligated to assign.	○ Person who shows sufficient proprietary interest

If applicant is the legal representative, indicate the authority to file the patent application, the inventor is:

Name of the Deceased or Legally Incapacitated Inventor :

If the Assignee is an Organization check here. ☒

Organization Name	Fox Factory, Inc.

Under the Paperwork Reduction Act of 1995, no persons are required to respond to a collection of information unless it contains a valid OMB control number.

Application Data Sheet 37 CFR 1.76	Attorney Docket Number	FOX-P5-08-12-US.CON
	Application Number	
Title of Invention	METHOD AND APPARATUS FOR AN ADJUSTABLE DAMPER	

Mailing Address Information:			
Address 1	130 Hangar Way		
Address 2			
City	Watsonville	**State/Province**	CA
Country i	US	Postal Code	95076
Phone Number		Fax Number	
Email Address			

Additional Applicant Data may be generated within this form by selecting the Add button. Add

Signature:

Remove

NOTE: This form must be signed in accordance with 37 CFR 1.33. See 37 CFR 1.4 for signature requirements and certifications

Signature	/John P. Wagner, Jr./			Date (YYYY-MM-DD)	2015-08-10
First Name	John	Last Name	Wagner	Registration Number	35398

Additional Signature may be generated within this form by selecting the Add button. Add

This collection of information is required by 37 CFR 1.76. The information is required to obtain or retain a benefit by the public which is to file (and by the USPTO to process) an application. Confidentiality is governed by 35 U.S.C. 122 and 37 CFR 1.14. This collection is estimated to take 23 minutes to complete, including gathering, preparing, and submitting the completed application data sheet form to the USPTO. Time will vary depending upon the individual case. Any comments on the amount of time you require to complete this form and/or suggestions for reducing this burden, should be sent to the Chief Information Officer, U.S. Patent and Trademark Office, U.S. Department of Commerce, P.O. Box 1450, Alexandria, VA 22313-1450. DO NOT SEND FEES OR COMPLETED FORMS TO THIS ADDRESS. **SEND TO: Commissioner for Patents, P.O. Box 1450, Alexandria, VA 22313-1450.**

Privacy Act Statement

The Privacy Act of 1974 (P.L. 93-579) requires that you be given certain information in connection with your submission of the attached form related to a patent application or patent. Accordingly, pursuant to the requirements of the Act, please be advised that: (1) the general authority for the collection of this information is 35 U.S.C. 2(b)(2); (2) furnishing of the information solicited is voluntary; and (3) the principal purpose for which the information is used by the U.S. Patent and Trademark Office is to process and/or examine your submission related to a patent application or patent. If you do not furnish the requested information, the U.S. Patent and Trademark Office may not be able to process and/or examine your submission, which may result in termination of proceedings or abandonment of the application or expiration of the patent.

The information provided by you in this form will be subject to the following routine uses:

1. The information on this form will be treated confidentially to the extent allowed under the Freedom of Information Act (5 U.S.C. 552) and the Privacy Act (5 U.S.C. 552a). Records from this system of records may be disclosed to the Department of Justice to determine whether the Freedom of Information Act requires disclosure of these records.

2. A record from this system of records may be disclosed, as a routine use, in the course of presenting evidence to a court, magistrate, or administrative tribunal, including disclosures to opposing counsel in the course of settlement negotiations.

3. A record in this system of records may be disclosed, as a routine use, to a Member of Congress submitting a request involving an individual, to whom the record pertains, when the individual has requested assistance from the Member with respect to the subject matter of the record.

4. A record in this system of records may be disclosed, as a routine use, to a contractor of the Agency having need for the information in order to perform a contract. Recipients of information shall be required to comply with the requirements of the Privacy Act of 1974, as amended, pursuant to 5 U.S.C. 552a(m).

5. A record related to an International Application filed under the Patent Cooperation Treaty in this system of records may be disclosed, as a routine use, to the International Bureau of the World Intellectual Property Organization, pursuant to the Patent Cooperation Treaty.

6. A record in this system of records may be disclosed, as a routine use, to another federal agency for purposes of National Security review (35 U.S.C. 181) and for review pursuant to the Atomic Energy Act (42 U.S.C. 218(c)).

7. A record from this system of records may be disclosed, as a routine use, to the Administrator, General Services, or his/her designee, during an inspection of records conducted by GSA as part of that agency's responsibility to recommend improvements in records management practices and programs, under authority of 44 U.S.C. 2904 and 2906. Such disclosure shall be made in accordance with the GSA regulations governing inspection of records for this purpose, and any other relevant (i.e., GSA or Commerce) directive. Such disclosure shall not be used to make determinations about individuals.

8. A record from this system of records may be disclosed, as a routine use, to the public after either publication of the application pursuant to 35 U.S.C. 122(b) or issuance of a patent pursuant to 35 U.S.C. 151. Further, a record may be disclosed, subject to the limitations of 37 CFR 1.14, as a routine use, to the public if the record was filed in an application which became abandoned or in which the proceedings were terminated and which application is referenced by either a published application, an application open to public inspections or an issued patent.

9. A record from this system of records may be disclosed, as a routine use, to a Federal, State, or local law enforcement agency, if the USPTO becomes aware of a violation or potential violation of law or regulation.

PATENT APPLICATION FEE DETERMINATION RECORD Substitute for Form PTO-875	Application or Docket Number 14/822,859

APPLICATION AS FILED - PART I

FOR	(Column 1) NUMBER FILED	(Column 2) NUMBER EXTRA	SMALL ENTITY RATE($)	SMALL ENTITY FEE($)	OR	OTHER THAN SMALL ENTITY RATE($)	OTHER THAN SMALL ENTITY FEE($)
BASIC FEE (37 CFR 1.16(a), (b), or (c))	N/A	N/A	N/A			N/A	280
SEARCH FEE (37 CFR 1.16(k), (i), or (m))	N/A	N/A	N/A			N/A	600
EXAMINATION FEE (37 CFR 1.16(o), (p), or (q))	N/A	N/A	N/A			N/A	720
TOTAL CLAIMS (37 CFR 1.16(i))	1 minus 20 =	*			OR	x 80 =	0.00
INDEPENDENT CLAIMS (37 CFR 1.16(h))	1 minus 3 =	*				x 420 =	0.00
APPLICATION SIZE FEE (37 CFR 1.16(s))	If the specification and drawings exceed 100 sheets of paper, the application size fee due is $310 ($155 for small entity) for each additional 50 sheets or fraction thereof. See 35 U.S.C. 41(a)(1)(G) and 37 CFR 1.16(s).						0.00
MULTIPLE DEPENDENT CLAIM PRESENT (37 CFR 1.16(j))							0.00
* If the difference in column 1 is less than zero, enter "0" in column 2.			TOTAL			TOTAL	1600

APPLICATION AS AMENDED - PART II

		(Column 1) CLAIMS REMAINING AFTER AMENDMENT		(Column 2) HIGHEST NUMBER PREVIOUSLY PAID FOR	(Column 3) PRESENT EXTRA	SMALL ENTITY RATE($)	SMALL ENTITY ADDITIONAL FEE($)	OR	OTHER THAN SMALL ENTITY RATE($)	OTHER THAN SMALL ENTITY ADDITIONAL FEE($)
AMENDMENT A	Total (37 CFR 1.16(i))	*	Minus	**	=	x =		OR	x =	
AMENDMENT A	Independent (37 CFR 1.16(h))	*	Minus	***	=	x =		OR	x =	
AMENDMENT A	Application Size Fee (37 CFR 1.16(s))									
AMENDMENT A	FIRST PRESENTATION OF MULTIPLE DEPENDENT CLAIM (37 CFR 1.16(j))							OR		
						TOTAL ADD'L FEE		OR	TOTAL ADD'L FEE	

		(Column 1) CLAIMS REMAINING AFTER AMENDMENT		(Column 2) HIGHEST NUMBER PREVIOUSLY PAID FOR	(Column 3) PRESENT EXTRA	RATE($)	ADDITIONAL FEE($)		RATE($)	ADDITIONAL FEE($)
AMENDMENT B	Total (37 CFR 1.16(i))	*	Minus	**	=	x =		OR	x =	
AMENDMENT B	Independent (37 CFR 1.16(h))	*	Minus	***	=	x =		OR	x =	
AMENDMENT B	Application Size Fee (37 CFR 1.16(s))									
AMENDMENT B	FIRST PRESENTATION OF MULTIPLE DEPENDENT CLAIM (37 CFR 1.16(j))							OR		
						TOTAL ADD'L FEE		OR	TOTAL ADD'L FEE	

* If the entry in column 1 is less than the entry in column 2, write "0" in column 3.
** If the "Highest Number Previously Paid For" IN THIS SPACE is less than 20, enter "20".
*** If the "Highest Number Previously Paid For" IN THIS SPACE is less than 3, enter "3".
The "Highest Number Previously Paid For" (Total or Independent) is the highest found in the appropriate box in column 1.

UNITED STATES PATENT AND TRADEMARK OFFICE

UNITED STATES DEPARTMENT OF COMMERCE
United States Patent and Trademark Office
Address: COMMISSIONER FOR PATENTS
P.O. Box 1450
Alexandria, Virginia 22313-1450
www.uspto.gov

APPLICATION NUMBER	FILING or 371(c) DATE	GRP ART UNIT	FIL FEE REC'D	ATTY.DOCKET.NO	TOT CLAIMS	IND CLAIMS
14/822,859	08/10/2015	3611	1600	FOX-P5-08-12-US.CON	1	1

CONFIRMATION NO. 6345

FILING RECEIPT

70408
FOX C/O WAGNER BLECHER LLP
123 WESTRIDGE DRIVE
WATSONVILLE, CA 95076

OC000000077054388

Date Mailed: 08/25/2015

Receipt is acknowledged of this non-provisional patent application. The application will be taken up for examination in due course. Applicant will be notified as to the results of the examination. Any correspondence concerning the application must include the following identification information: the U.S. APPLICATION NUMBER, FILING DATE, NAME OF APPLICANT, and TITLE OF INVENTION. Fees transmitted by check or draft are subject to collection. Please verify the accuracy of the data presented on this receipt. **If an error is noted on this Filing Receipt, please submit a written request for a Filing Receipt Correction. Please provide a copy of this Filing Receipt with the changes noted thereon. If you received a "Notice to File Missing Parts" for this application, please submit any corrections to this Filing Receipt with your reply to the Notice. When the USPTO processes the reply to the Notice, the USPTO will generate another Filing Receipt incorporating the requested corrections**

Inventor(s)

William M. Becker, Aptos, CA;

Applicant(s)

Fox Factory, Inc., Watsonville, CA;

Power of Attorney: The patent practitioners associated with Customer Number 70408

Domestic Priority data as claimed by applicant

This application is a CON of 13/890,753 05/09/2013 PAT 9103400
which claims benefit of 61/644,859 05/09/2012

Foreign Applications for which priority is claimed (You may be eligible to benefit from the **Patent Prosecution Highway** program at the USPTO. Please see http://www.uspto.gov for more information.) - None.
Foreign application information must be provided in an Application Data Sheet in order to constitute a claim to foreign priority. See 37 CFR 1.55 and 1.76.

If Required, Foreign Filing License Granted: 08/24/2015

The country code and number of your priority application, to be used for filing abroad under the Paris Convention, is **US 14/822,859**

Projected Publication Date: 12/03/2015

Non-Publication Request: No

Early Publication Request: No

Title

METHOD AND APPARATUS FOR AN ADJUSTABLE DAMPER

Preliminary Class

280

Statement under 37 CFR 1.55 or 1.78 for AIA (First Inventor to File) Transition Applications: No

PROTECTING YOUR INVENTION OUTSIDE THE UNITED STATES

Since the rights granted by a U.S. patent extend only throughout the territory of the United States and have no effect in a foreign country, an inventor who wishes patent protection in another country must apply for a patent in a specific country or in regional patent offices. Applicants may wish to consider the filing of an international application under the Patent Cooperation Treaty (PCT). An international (PCT) application generally has the same effect as a regular national patent application in each PCT-member country. The PCT process **simplifies** the filing of patent applications on the same invention in member countries, but **does not result** in a grant of "an international patent" and does not eliminate the need of applicants to file additional documents and fees in countries where patent protection is desired.

Almost every country has its own patent law, and a person desiring a patent in a particular country must make an application for patent in that country in accordance with its particular laws. Since the laws of many countries differ in various respects from the patent law of the United States, applicants are advised to seek guidance from specific foreign countries to ensure that patent rights are not lost prematurely.

Applicants also are advised that in the case of inventions made in the United States, the Director of the USPTO must issue a license before applicants can apply for a patent in a foreign country. The filing of a U.S. patent application serves as a request for a foreign filing license. The application's filing receipt contains further information and guidance as to the status of applicant's license for foreign filing.

Applicants may wish to consult the USPTO booklet, "General Information Concerning Patents" (specifically, the section entitled "Treaties and Foreign Patents") for more information on timeframes and deadlines for filing foreign patent applications. The guide is available either by contacting the USPTO Contact Center at 800-786-9199, or it can be viewed on the USPTO website at http://www.uspto.gov/web/offices/pac/doc/general/index.html.

For information on preventing theft of your intellectual property (patents, trademarks and copyrights), you may wish to consult the U.S. Government website, http://www.stopfakes.gov. Part of a Department of Commerce initiative, this website includes self-help "toolkits" giving innovators guidance on how to protect intellectual property in specific countries such as China, Korea and Mexico. For questions regarding patent enforcement issues, applicants may call the U.S. Government hotline at 1-866-999-HALT (1-866-999-4258).

LICENSE FOR FOREIGN FILING UNDER

Title 35, United States Code, Section 184

Title 37, Code of Federal Regulations, 5.11 & 5.15

GRANTED

The applicant has been granted a license under 35 U.S.C. 184, if the phrase "IF REQUIRED, FOREIGN FILING LICENSE GRANTED" followed by a date appears on this form. Such licenses are issued in all applications where the conditions for issuance of a license have been met, regardless of whether or not a license may be required as set forth in 37 CFR 5.15. The scope and limitations of this license are set forth in 37 CFR 5.15(a) unless an earlier license has been issued under 37 CFR 5.15(b). The license is subject to revocation upon written notification. The date indicated is the effective date of the license, unless an earlier license of similar scope has been granted under 37 CFR 5.13 or 5.14.

This license is to be retained by the licensee and may be used at any time on or after the effective date thereof unless it is revoked. This license is automatically transferred to any related applications(s) filed under 37 CFR 1.53(d). This license is not retroactive.

The grant of a license does not in any way lessen the responsibility of a licensee for the security of the subject matter as imposed by any Government contract or the provisions of existing laws relating to espionage and the national security or the export of technical data. Licensees should apprise themselves of current regulations especially with respect to certain countries, of other agencies, particularly the Office of Defense Trade Controls, Department of State (with respect to Arms, Munitions and Implements of War (22 CFR 121-128)); the Bureau of Industry and Security, Department of Commerce (15 CFR parts 730-774); the Office of Foreign AssetsControl, Department of Treasury (31 CFR Parts 500+) and the Department of Energy.

NOT GRANTED

No license under 35 U.S.C. 184 has been granted at this time, if the phrase "IF REQUIRED, FOREIGN FILING LICENSE GRANTED" DOES NOT appear on this form. Applicant may still petition for a license under 37 CFR 5.12, if a license is desired before the expiration of 6 months from the filing date of the application. If 6 months has lapsed from the filing date of this application and the licensee has not received any indication of a secrecy order under 35 U.S.C. 181, the licensee may foreign file the application pursuant to 37 CFR 5.15(b).

SelectUSA

The United States represents the largest, most dynamic marketplace in the world and is an unparalleled location for business investment, innovation, and commercialization of new technologies. The U.S. offers tremendous resources and advantages for those who invest and manufacture goods here. Through SelectUSA, our nation works to promote and facilitate business investment. SelectUSA provides information assistance to the international investor community; serves as an ombudsman for existing and potential investors; advocates on behalf of U.S. cities, states, and regions competing for global investment; and counsels U.S. economic development organizations on investment attraction best practices. To learn more about why the United States is the best country in the world to develop technology, manufacture products, deliver services, and grow your business, visit http://www.SelectUSA.gov or call +1-202-482-6800.

To: patents@wagnerblecher.com,,
From: PAIR_eOfficeAction@uspto.gov
Cc: PAIR_eOfficeAction@uspto.gov
Subject: Private PAIR Correspondence Notification for Customer Number 70408

Aug 25, 2015 05:38:27 AM

Dear PAIR Customer:

FOX C/O WAGNER BLECHER LLP
123 WESTRIDGE DRIVE
WATSONVILLE, CA 95076
UNITED STATES

The following USPTO patent application(s) associated with your Customer Number, 70408 , have new outgoing correspondence. This correspondence is now available for viewing in Private PAIR.

The official date of notification of the outgoing correspondence will be indicated on the form PTOL-90 accompanying the correspondence.

Disclaimer:
The list of documents shown below is provided as a courtesy and is not part of the official file wrapper. The content of the images shown in PAIR is the official record.

Application	Document	Mailroom Date	Attorney Docket No.
14822859	APP.FILE.REC	08/25/2015	FOX-P5-08-12-US.CON

To view your correspondence online or update your email addresses, please visit us anytime at https://sportal.uspto.gov/secure/myportal/privatepair.

If you have any questions, please email the Electronic Business Center (EBC) at EBC@uspto.gov with 'e-Office Action' on the subject line or call 1-866-217-9197 during the following hours:

Monday - Friday 6:00 a.m. to 12:00 a.m.

Thank you for prompt attention to this notice,

UNITED STATES PATENT AND TRADEMARK OFFICE

PATENT APPLICATION INFORMATION RETRIEVAL SYSTEM

UNITED STATES PATENT AND TRADEMARK OFFICE

UNITED STATES DEPARTMENT OF COMMERCE
United States Patent and Trademark Office
Address: COMMISSIONER FOR PATENTS
P.O. Box 1450
Alexandria, Virginia 22313-1450
www.uspto.gov

APPLICATION NO.	FILING DATE	FIRST NAMED INVENTOR	ATTORNEY DOCKET NO.	CONFIRMATION NO.
14/822,859	08/10/2015	William M. Becker	FOX-P5-08-12-US.CON	6345

70408 7590 10/02/2015
FOX C/O WAGNER BLECHER LLP
123 WESTRIDGE DRIVE
WATSONVILLE, CA 95076

EXAMINER
SAHNI, VISHAL R

ART UNIT	PAPER NUMBER
3657	

NOTIFICATION DATE	DELIVERY MODE
10/02/2015	ELECTRONIC

Please find below and/or attached an Office communication concerning this application or proceeding.

The time period for reply, if any, is set in the attached communication.

Notice of the Office communication was sent electronically on above-indicated "Notification Date" to the following e-mail address(es):

patents@wagnerblecher.com

PTOL-90A (Rev. 04/07)

Office Action Summary	Application No. 14/822,859	Applicant(s) BECKER, WILLIAM M.	
	Examiner VISHAL SAHNI	Art Unit 3657	AIA (First Inventor to File) Status No

-- The MAILING DATE of this communication appears on the cover sheet with the correspondence address --

Period for Reply

A SHORTENED STATUTORY PERIOD FOR REPLY IS SET TO EXPIRE 3 MONTHS FROM THE MAILING DATE OF THIS COMMUNICATION.

- Extensions of time may be available under the provisions of 37 CFR 1.136(a). In no event, however, may a reply be timely filed after SIX (6) MONTHS from the mailing date of this communication.
- If NO period for reply is specified above, the maximum statutory period will apply and will expire SIX (6) MONTHS from the mailing date of this communication.
- Failure to reply within the set or extended period for reply will, by statute, cause the application to become ABANDONED (35 U.S.C. § 133). Any reply received by the Office later than three months after the mailing date of this communication, even if timely filed, may reduce any earned patent term adjustment. See 37 CFR 1.704(b).

Status

1)☒ Responsive to communication(s) filed on 08/10/15.

☐ A declaration(s)/affidavit(s) under **37 CFR 1.130(b)** was/were filed on _____.

2a)☐ This action is **FINAL**. 2b)☒ This action is non-final.

3)☐ An election was made by the applicant in response to a restriction requirement set forth during the interview on _____; the restriction requirement and election have been incorporated into this action.

4)☐ Since this application is in condition for allowance except for formal matters, prosecution as to the merits is closed in accordance with the practice under *Ex parte Quayle*, 1935 C.D. 11, 453 O.G. 213.

Disposition of Claims*

5)☒ Claim(s) 1 is/are pending in the application.

5a) Of the above claim(s) _____ is/are withdrawn from consideration.

6)☐ Claim(s) _____ is/are allowed.

7)☒ Claim(s) 1 is/are rejected.

8)☐ Claim(s) _____ is/are objected to.

9)☐ Claim(s) _____ are subject to restriction and/or election requirement.

* If any claims have been determined allowable, you may be eligible to benefit from the **Patent Prosecution Highway** program at a participating intellectual property office for the corresponding application. For more information, please see http://www.uspto.gov/patents/init_events/pph/index.jsp or send an inquiry to PPHfeedback@uspto.gov.

Application Papers

10)☐ The specification is objected to by the Examiner.

11)☒ The drawing(s) filed on 08/10/15 is/are: a)☒ accepted or b)☐ objected to by the Examiner.

Applicant may not request that any objection to the drawing(s) be held in abeyance. See 37 CFR 1.85(a).

Replacement drawing sheet(s) including the correction is required if the drawing(s) is objected to. See 37 CFR 1.121(d).

Priority under 35 U.S.C. § 119

12)☐ Acknowledgment is made of a claim for foreign priority under 35 U.S.C. § 119(a)-(d) or (f).

Certified copies:

a)☐ All b)☐ Some** c)☐ None of the:

1.☐ Certified copies of the priority documents have been received.

2.☐ Certified copies of the priority documents have been received in Application No. _____.

3.☐ Copies of the certified copies of the priority documents have been received in this National Stage application from the International Bureau (PCT Rule 17.2(a)).

** See the attached detailed Office action for a list of the certified copies not received.

Attachment(s)

1) ☒ Notice of References Cited (PTO-892)

2) ☐ Information Disclosure Statement(s) (PTO/SB/08a and/or PTO/SB/08b) Paper No(s)/Mail Date _____.

3) ☐ Interview Summary (PTO-413) Paper No(s)/Mail Date. _____ .

4) ☐ Other: _____.

DETAILED ACTION

This is a first Non-Final Office Action on the merits in response to the application filed 08/10/15. The application claims domestic priority to 13/890,753, which issued as U.S. Patent No. 9,103,400. Claim 1 is currently pending, yet is rejected under section 101 for double patenting and section 102, as detailed below. The present application is being examined under the pre-AIA first to invent provisions.

Double Patenting

A rejection based on double patenting of the "same invention" type finds its support in the language of 35 U.S.C. 101 which states that "whoever invents or discovers any new and useful process... may obtain a patent therefor..." (Emphasis added). Thus, the term "same invention," in this context, means an invention drawn to identical subject matter. See *Miller v. Eagle Mfg. Co.*, 151 U.S. 186 (1894); *In re Vogel*, 422 F.2d 438, 164 USPQ 619 (CCPA 1970); and *In re Ockert*, 245 F.2d 467, 114 USPQ 330 (CCPA 1957).

A statutory type (35 U.S.C. 101) double patenting rejection can be overcome by canceling or amending the claims that are directed to the same invention so they are no longer coextensive in scope. The filing of a terminal disclaimer <u>cannot</u> overcome a double patenting rejection based upon 35 U.S.C. 101.

Claim 1 is rejected under 35 U.S.C. 101 as claiming the same invention as that of claim 1 of prior U.S. Patent No. 9,103,400. This is a statutory double patenting rejection.

Claim Rejections - 35 USC § 102

The following is a quotation of the appropriate paragraphs of pre-AIA 35 U.S.C. 102 that form the basis for the rejections under this section made in this Office action:

> A person shall be entitled to a patent unless –
>
> (a) the invention was known or used by others in this country, or patented or described in a printed publication in this or a foreign country, before the invention thereof by the applicant for a patent.

Galasso

Claim 1 is rejected under pre-AIA 35 U.S.C. 102(a) as being anticipated by Galasso et al. (U.S. Patent Pub. No. 2012/0080279). Galasso is directed to a method and apparatus for sag adjustment. See Abstract.

Claim 1: Galasso discloses an air bleed system [see Figs. 2-4] for a suspension fork or shock absorber (200, 300,400) comprising: a fluid passage (224, 424-2) between an interior (inside 210) of the suspension and an exterior (outside 210) of the suspension; and a manually operable valve (214, 314, 414, 470) [see para. 0037 (either a "rotary sleeve" and/or a "bleed valve" such as a Schrader-type valve)] having a first position substantially closing said fluid passage [see, e.g., Fig. 4 (when 414 covers 424-2 so that it is not fluidly coupled to 470)] and a second position allowing a fluid to flow between said interior and said exterior [see, e.g., Fig. 4 (when 414 is moved so that 424-2 is fluidly coupled to 470)]. See Figs. 2-4; para. 0037-38.

Conclusion

Any inquiry concerning this communication or earlier communications from the examiner should be directed to VISHAL SAHNI whose telephone number is (571)270-3838. The examiner can normally be reached on Monday - Friday 8:30-5.

If attempts to reach the examiner by telephone are unsuccessful, the examiner's supervisor, Robert Siconolfi can be reached on (571) 272-7124. The fax phone number for the organization where this application or proceeding is assigned is 571-273-8300.

Information regarding the status of an application may be obtained from the Patent Application Information Retrieval (PAIR) system. Status information for published applications may be obtained from either Private PAIR or Public PAIR. Status information for unpublished applications is available through Private PAIR only. For more information about the PAIR system, see http://pair-direct.uspto.gov. Should you have questions on access to the Private PAIR system, contact the Electronic Business Center (EBC) at 866-217-9197 (toll-free). If you would like assistance from a USPTO Customer Service Representative or access to the automated information system, call 800-786-9199 (IN USA OR CANADA) or 571-272-1000.

/VISHAL SAHNI/
Primary Examiner, Art Unit 3657
September 28, 2015

Notice of References Cited	Application/Control No. 14/822,859	Applicant(s)/Patent Under Reexamination BECKER, WILLIAM M.	
	Examiner VISHAL SAHNI	Art Unit 3657	Page 1 of 1

U.S. PATENT DOCUMENTS

*		Document Number Country Code-Number-Kind Code	Date MM-YYYY	Name	CPC Classification	US Classification
*	A	US-2013/0319805 A1	12-2013	Becker; William M.	F16F9/435	188/322.13
*	B	US-9,103,400 B2	08-2015	Becker; William M.	F16F9/435	1/1
*	C	US-7,255,210 B2	08-2007	Larsson; Mats	F16F9/342	188/280
*	D	US-2012/0080279 A1	04-2012	GALASSO; Mario	B60G17/08	188/297
*	E	US-5,853,071 A	12-1998	Robinson; Norman F.	B60T11/30	188/352
*	F	US-5,816,281 A	10-1998	Mixon; Charles S.	B60T17/222	137/14
*	G	US-5,503,258 A	04-1996	Clarke; William H.	F16F9/48	188/266.5
*	H	US-2012/0007327 A1	01-2012	Talavasek; Jan	B62K25/20	280/124.1
*	I	US-2006/0289258 A1	12-2006	Fox; Robert C.	F16F9/512	188/322.21
*	J	US-2010/0186836 A1	07-2010	Yoshihiro; Kenji	H01M8/04201	137/614.05
*	K	US-5,697,477 A	12-1997	Hiramoto; Kouji	F16F9/0218	188/322.18
*	L	US-2003/0001358 A1	01-2003	Becker, William M.	B62K25/08	280/276
	M	US-				

FOREIGN PATENT DOCUMENTS

*		Document Number Country Code-Number-Kind Code	Date MM-YYYY	Country	Name	CPC Classification
	N					
	O					
	P					
	Q					
	R					
	S					
	T					

NON-PATENT DOCUMENTS

*		Include as applicable: Author, Title Date, Publisher, Edition or Volume, Pertinent Pages)
	U	
	V	
	W	
	X	

*A copy of this reference is not being furnished with this Office action. (See MPEP § 707.05(a).)
Dates in MM-YYYY format are publication dates. Classifications may be US or foreign.

Search Notes	Application/Control No.	Applicant(s)/Patent Under Reexamination
	14822859	BECKER, WILLIAM M.
	Examiner	**Art Unit**
	VISHAL SAHNI	3657

CPC- SEARCHED		
Symbol	**Date**	**Examiner**
F16F9/34,346,3465,435; B62K2025/048		

CPC COMBINATION SETS - SEARCHED		
Symbol	**Date**	**Examiner**

US CLASSIFICATION SEARCHED			
Class	**Subclass**	**Date**	**Examiner**

SEARCH NOTES		
Search Notes	**Date**	**Examiner**
Class 188 and 267 term search (see search history)	9/28/2015	VRS

INTERFERENCE SEARCH			
US Class/ CPC Symbol	**US Subclass / CPC Group**	**Date**	**Examiner**

Index of Claims	Application/Control No.	Applicant(s)/Patent Under Reexamination
	14822859	BECKER, WILLIAM M.
	Examiner	**Art Unit**
	VISHAL SAHNI	3657

✓	Rejected	-	Cancelled	N	Non-Elected	A	Appeal
=	Allowed	÷	Restricted	I	Interference	O	Objected

☐ Claims renumbered in the same order as presented by applicant ☐ CPA ☐ T.D. ☐ R.1.47

CLAIM		DATE								
Final	Original	09/28/2015								
	1	✓								

EAST Search History

EAST Search History (Prior Art)

Ref #	Hits	Search Query	DBs	Default Operator	Plurals	Time Stamp
L1	1	"13890753"	USPAT	OR	OFF	2015/09/28 12:12
L5	148	(F16F9/34,346,3465.cpc. or B62K2025/048.cpc.) and bleed and valve	US-PGPUB; USPAT; USOCR; FPRS; EPO; JPO; DERWENT; IBM_TDB	OR	OFF	2015/09/28 13:44
L6	41	(F16F9/34,346,3465.cpc. or B62K2025/048.cpc.) and bleed and valve and (manual$2)	US-PGPUB; USPAT; USOCR; FPRS; EPO; JPO; DERWENT; IBM_TDB	OR	OFF	2015/09/28 13:44
L7	15	(188/322.13,322.19-322.21.ccls. or 267/64.18,64.22,64.26.ccls.) and bleed.ab. and valve	US-PGPUB; USPAT; USOCR; FPRS; EPO; JPO; DERWENT; IBM_TDB	OR	OFF	2015/09/28 13:44
S1	3	"20130134687"	US-PGPUB; USPAT; USOCR; FPRS; EPO; JPO; DERWENT; IBM_TDB	OR	OFF	2015/01/05 14:26
S2	2	"20130319805"	US-PGPUB; USPAT; USOCR; FPRS; EPO; JPO; DERWENT; IBM_TDB	OR	OFF	2015/01/05 14:39
S3	126	"188".clas. and fork and bleed and valve and spring	US-PGPUB; USPAT; USOCR; FPRS; EPO; JPO; DERWENT; IBM_TDB	OR	OFF	2015/01/05 14:54
S4	28	"188".clas. and fork.ab. and bleed and valve and spring	US-PGPUB; USPAT; USOCR; FPRS; EPO; JPO; DERWENT; IBM_TDB	OR	OFF	2015/01/05 14:55
S5	22	"188".clas. and fork and bleed and valve and spring and elevation	US-PGPUB; USPAT; USOCR; FPRS; EPO; JPO; DERWENT; IBM_TDB	OR	OFF	2015/01/05 15:03
S6	74	"188".clas. and bleed.ab. and valve and spring	US-PGPUB; USPAT; USOCR; FPRS; EPO; JPO; DERWENT; IBM_TDB	OR	OFF	2015/01/05 15:50
S7	11	(188/322.13,322.19-322.21.ccls. or 267/64.18,64.22,64.26.ccls.) and	US-PGPUB; USPAT; USOCR;	OR	OFF	2015/01/05 15:57

		bleed.ab. and valve and spring	FPRS; EPO; JPO; DERWENT; IBM_TDB			
S9	3	"188".clas. and seal and (diametrical adj recess)	US-PGPUB; USPAT; USOCR; FPRS; EPO; JPO; DERWENT; IBM_TDB	OR	OFF	2015/01/05 16:34
S10	0	schrader and seal and (diametrical adj recess)	US-PGPUB; USPAT; USOCR; FPRS; EPO; JPO; DERWENT; IBM_TDB	OR	OFF	2015/01/05 16:35
S11	10	schrader and (seal near recess)	US-PGPUB; USPAT; USOCR; FPRS; EPO; JPO; DERWENT; IBM_TDB	OR	OFF	2015/01/05 16:36
S12	72	schrader and (seal near (mov$3 or adjust$3 or push$3 or shift$3))	US-PGPUB; USPAT; USOCR; FPRS; EPO; JPO; DERWENT; IBM_TDB	OR	OFF	2015/01/05 16:37
S13	1553	(o-ring near (mov$3 or adjust$3 or push$3 or shift$3))	US-PGPUB; USPAT; USOCR; FPRS; EPO; JPO; DERWENT; IBM_TDB	OR	OFF	2015/01/05 16:39
S14	34	(o-ring near (mov$3 or adjust$3 or push$3 or shift$3) near (open$3 or clos$3))	US-PGPUB; USPAT; USOCR; FPRS; EPO; JPO; DERWENT; IBM_TDB	OR	OFF	2015/01/05 16:39
S15	50	becker-william-m.in.	US-PGPUB; USPAT; USOCR; FPRS; EPO; JPO; DERWENT; IBM_TDB	OR	OFF	2015/01/05 20:59
S16	15	becker-william-m.in. and o-ring	US-PGPUB; USPAT; USOCR; FPRS; EPO; JPO; DERWENT; IBM_TDB	OR	OFF	2015/01/05 20:59
S17	25	(188/322.13,322.19-322.21.ccls. or 267/64.18,64.22,64.26.ccls.) and bleed and valve and spring and fork	US-PGPUB; USPAT; USOCR; FPRS; EPO; JPO; DERWENT; IBM_TDB	OR	OFF	2015/03/27 12:01
S18	77	(F16F9/34,346,3465.cpc. or B62K2025/048.cpc.) and bleed and valve and spring and fork	US-PGPUB; USPAT; USOCR; FPRS; EPO; JPO; DERWENT; IBM_TDB	OR	OFF	2015/03/27 12:06
S19	13	(188/322.13,322.19-322.21.ccls. or 267/64.18,64.22,64.26.ccls.) and bleed.ab. and valve and spring	US-PGPUB; USPAT; USOCR; FPRS; EPO; JPO; DERWENT; IBM_TDB	OR	OFF	2015/03/27 12:06
S20	14	(F16F9/34,346,3465.cpc. or B62K2025/048.cpc.) and becker-	US-PGPUB; USPAT; USOCR;	OR	OFF	2015/03/27 12:08

		william-m.in.	FPRS; EPO; JPO; DERWENT; IBM_TDB			
S21	0	(fork and (air adj bleed) and gap and oil and damper and seal).clm.	US-PGPUB; USPAT; USOCR; FPRS; EPO; JPO; DERWENT; IBM_TDB	OR	OFF	2015/03/27 12:09
S22	0	(fork and (air and bleed) and gap and oil and damper and seal).clm.	US-PGPUB; USPAT; USOCR; FPRS; EPO; JPO; DERWENT; IBM_TDB	OR	OFF	2015/03/27 12:10
S23	15	(F16F9/34,346,3465,435.cpc. or B62K2025/048.cpc.) and becker-william-m.in.	US-PGPUB; USPAT; USOCR; FPRS; EPO; JPO; DERWENT; IBM_TDB	OR	OFF	2015/03/27 12:14
S24	5	(F16F9/435.cpc.) and (air and bleed)	US-PGPUB; USPAT; USOCR; FPRS; EPO; JPO; DERWENT; IBM_TDB	OR	OFF	2015/03/27 12:15

9/28/2015 1:44:56 PM
C:\Users\vsahni\Documents\EAST\Workspaces\14822859.wsp

UNITED STATES PATENT AND TRADEMARK OFFICE

UNITED STATES DEPARTMENT OF COMMERCE
United States Patent and Trademark Office
Address: COMMISSIONER FOR PATENTS
P.O. Box 1450
Alexandria, Virginia 22313-1450
www.uspto.gov

BIB DATA SHEET

CONFIRMATION NO. 6345

SERIAL NUMBER	FILING or 371(c) DATE	CLASS	GROUP ART UNIT	ATTORNEY DOCKET NO.
14/822,859	08/10/2015 RULE	188	3657	FOX-P5-08-12-US.CON

APPLICANTS
Fox Factory, Inc., Watsonville, CA;

INVENTORS
William M. Becker, Aptos, CA;

**** CONTINUING DATA ***************************
This application is a CON of 13/890,753 05/09/2013 PAT 9103400
which claims benefit of 61/644,859 05/09/2012

**** FOREIGN APPLICATIONS ****************************

**** IF REQUIRED, FOREIGN FILING LICENSE GRANTED ****
08/24/2015

Foreign Priority claimed	☐ Yes ☑ No		STATE OR COUNTRY	SHEETS DRAWINGS	TOTAL CLAIMS	INDEPENDENT CLAIMS
35 USC 119(a-d) conditions met	☐ Yes ☑ No	☐ Met after Allowance	CA	4	1	1
Verified and Acknowledged	/VISHAL R SAHNI/ Examiner's Signature	Initials				

ADDRESS
FOX C/O WAGNER BLECHER LLP
123 WESTRIDGE DRIVE
WATSONVILLE, CA 95076
UNITED STATES

TITLE
METHOD AND APPARATUS FOR AN ADJUSTABLE DAMPER

FILING FEE RECEIVED		
1600	FEES: Authority has been given in Paper No._____ to charge/credit DEPOSIT ACCOUNT No._____ for following:	☐ All Fees ☐ 1.16 Fees (Filing) ☐ 1.17 Fees (Processing Ext. of time) ☐ 1.18 Fees (Issue) ☐ Other _____ ☐ Credit

BIB (Rev. 05/07).

To: patents@wagnerblecher.com,,
From: PAIR_eOfficeAction@uspto.gov
Cc: PAIR_eOfficeAction@uspto.gov
Subject: Private PAIR Correspondence Notification for Customer Number 70408

Oct 02, 2015 05:36:53 AM

Dear PAIR Customer:

FOX C/O WAGNER BLECHER LLP
123 WESTRIDGE DRIVE
WATSONVILLE, CA 95076
UNITED STATES

The following USPTO patent application(s) associated with your Customer Number, 70408 , have new outgoing correspondence. This correspondence is now available for viewing in Private PAIR.

The official date of notification of the outgoing correspondence will be indicated on the form PTOL-90 accompanying the correspondence.

Disclaimer:
The list of documents shown below is provided as a courtesy and is not part of the official file wrapper. The content of the images shown in PAIR is the official record.

Application	Document	Mailroom Date	Attorney Docket No.
14822859	CTNF	10/02/2015	FOX-P5-08-12-US.CON
	892	10/02/2015	FOX-P5-08-12-US.CON

To view your correspondence online or update your email addresses, please visit us anytime at https://sportal.uspto.gov/secure/myportal/privatepair.

If you have any questions, please email the Electronic Business Center (EBC) at EBC@uspto.gov with 'e-Office Action' on the subject line or call 1-866-217-9197 during the following hours:

Monday - Friday 6:00 a.m. to 12:00 a.m.

Thank you for prompt attention to this notice,

UNITED STATES PATENT AND TRADEMARK OFFICE

PATENT APPLICATION INFORMATION RETRIEVAL SYSTEM

UNITED STATES PATENT AND TRADEMARK OFFICE

UNITED STATES DEPARTMENT OF COMMERCE
United States Patent and Trademark Office
Address: COMMISSIONER FOR PATENTS
P.O. Box 1450
Alexandria, Virginia 22313-1450
www.uspto.gov

APPLICATION NUMBER	FILING OR 371(C) DATE	FIRST NAMED APPLICANT	ATTY. DOCKET NO./TITLE
14/822,859	08/10/2015	William M. Becker	FOX-P5-08-12-US.CON

CONFIRMATION NO. 6345

70408
FOX C/O WAGNER BLECHER LLP
123 WESTRIDGE DRIVE
WATSONVILLE, CA 95076

PUBLICATION NOTICE

OC000000079060271

Title:METHOD AND APPARATUS FOR AN ADJUSTABLE DAMPER

Publication No.US-2015-0344100-A1
Publication Date:12/03/2015

NOTICE OF PUBLICATION OF APPLICATION

The above-identified application will be electronically published as a patent application publication pursuant to 37 CFR 1.211, et seq. The patent application publication number and publication date are set forth above.

The publication may be accessed through the USPTO's publically available Searchable Databases via the Internet at www.uspto.gov. The direct link to access the publication is currently http://www.uspto.gov/patft/.

The publication process established by the Office does not provide for mailing a copy of the publication to applicant. A copy of the publication may be obtained from the Office upon payment of the appropriate fee set forth in 37 CFR 1.19(a)(1). Orders for copies of patent application publications are handled by the USPTO's Office of Public Records. The Office of Public Records can be reached by telephone at (703) 308-9726 or (800) 972-6382, by facsimile at (703) 305-8759, by mail addressed to the United States Patent and Trademark Office, Office of Public Records, Alexandria, VA 22313-1450 or via the Internet.

In addition, information on the status of the application, including the mailing date of Office actions and the dates of receipt of correspondence filed in the Office, may also be accessed via the Internet through the Patent Electronic Business Center at www.uspto.gov using the public side of the Patent Application Information and Retrieval (PAIR) system. The direct link to access this status information is currently http://pair.uspto.gov/. Prior to publication, such status information is confidential and may only be obtained by applicant using the private side of PAIR.

Further assistance in electronically accessing the publication, or about PAIR, is available by calling the Patent Electronic Business Center at 1-866-217-9197.

Office of Data Managment, Application Assistance Unit (571) 272-4000, or (571) 272-4200, or 1-888-786-0101

To: patents@wagnerblecher.com,,
From: PAIR_eOfficeAction@uspto.gov
Cc: PAIR_eOfficeAction@uspto.gov
Subject: Private PAIR Correspondence Notification for Customer Number 70408

Dec 04, 2015 05:29:54 AM

Dear PAIR Customer:

FOX C/O WAGNER BLECHER LLP
123 WESTRIDGE DRIVE
WATSONVILLE, CA 95076
UNITED STATES

The following USPTO patent application(s) associated with your Customer Number, 70408 , have new outgoing correspondence. This correspondence is now available for viewing in Private PAIR.

The official date of notification of the outgoing correspondence will be indicated on the form PTOL-90 accompanying the correspondence.

Disclaimer:
The list of documents shown below is provided as a courtesy and is not part of the official file wrapper. The content of the images shown in PAIR is the official record.

Application	Document	Mailroom Date	Attorney Docket No.
14822859	NTC.PUB	12/03/2015	FOX-P5-08-12-US.CON

To view your correspondence online or update your email addresses, please visit us anytime at https://sportal.uspto.gov/secure/myportal/privatepair.

If you have any questions, please email the Electronic Business Center (EBC) at EBC@uspto.gov with 'e-Office Action' on the subject line or call 1-866-217-9197 during the following hours:

Monday - Friday 6:00 a.m. to 12:00 a.m.

Thank you for prompt attention to this notice,

UNITED STATES PATENT AND TRADEMARK OFFICE

PATENT APPLICATION INFORMATION RETRIEVAL SYSTEM

IN THE UNITED STATES PATENT AND TRADEMARK OFFICE

In re Application of: William M. Becker	Examiner: Sahni, V.
Application No.: 14/822,859	Art Unit: 3657
Filed: 08/10/2015	Conf. No.: 6345
For: METHOD AND APPARATUS FOR AN ADJUSTABLE DAMPER	

Commissioner for Patents
P.O. Box 1450
Alexandria, VA 22313-1450

Response to Office Action

Dear Sir:

In response to the Non-Final Office action mailed October 02, 2015, Applicants respectfully request reconsideration of the above referenced patent application. Please consider the following amendments and remarks for allowance of the above-identified patent application.

CLAIMS

1. (Currently Amended) An air bleed system for a lower fork of a suspension fork or shock absorber comprising:

a fluid passage between an interior of the ~~suspension~~ lower fork and an exterior of the lower fork ~~suspension~~; and

a manually operable valve located in lower fork, said manually operable valve having a first position substantially closing said fluid passage and a second position allowing a fluid to flow between said interior and said exterior, wherein said fluid passage and said manually operable valve are positioned at a distance from an oil bath lubrication within said suspension fork or shock absorber, such that when said manually operable valve is in said second position, a substantial portion of said oil bath lubrication remains within said suspension fork or shock absorber and such that when excessive air pressure in said suspension fork or shock absorber is relieved at high elevation, said substantial portion of said oil bath lubrication that is leveled in said lower fork remains within said lower fork.

2. (New) The air bleed system of claim 1, wherein said suspension fork or shock absorber comprises:

a damper.

3. (New) The air bleed system of claim 1, wherein said fluid comprises:

a gas.

4. (New) The air bleed system of claim 1, further comprising:

a valve activator coupled with said manually operable valve, said valve activator comprising:

an activation position configured for, upon activation, positioning said manually operable valve into said first position; and

a deactivation position configured for, upon deactivation, positioning said manually operable valve into said second position, and whereupon said activation, the air pressure in said suspension is equalized with the local ambient air pressure.

5. (New) The air bleed system of claim 4, wherein said valve activator comprises:

a button configured for being pressed for said activation and said deactivation.

6. (New) The air bleed system of claim 4, wherein said valve activator is positioned on a die-cast feature of said suspension.

7. (New) The air bleed system of claim 6, further comprising:

a diametrical recess; and

a sealing o-ring comprising:

a sealed position; and

an unsealed position, wherein said sealed position seals between said die-cast feature and said suspension, whereupon said activation, said sealing o-ring

moves into said diametrical recess, thereby attaining said unsealed position and letting air pressure by-pass into or out of said suspension via a vent hole.

8. (New) The air bleed system of claim 4, wherein said manually operable valve comprises:

a spring coupled with said valve activator, whereupon said deactivation, said spring biases said valve activator toward said first position.

9. (New) The air bleed system of claim 8, wherein said second position comprises:

a sealing engagement between said sealing o-ring and a seal bore, wherein when in said sealing engagement, said air pressure does not by-pass into or out of said suspension.

10. (New) A fluid equalization system for a lower fork of a suspension fork or shock absorber comprising:

a fluid flow path between a first region of said lower fork of said suspension fork or shock absorber having a first pressure and a second region having a second pressure; and

a valve member located in said lower fork of said suspension fork or said shock absorber, said valve member having a first position substantially obstructing said flow path and a second position for which said flow path is open, wherein said fluid flow path and said valve member are positioned at a distance from an oil bath lubrication within said suspension fork or shock absorber, such that when said valve member is in said second position, a substantial portion of said oil bath lubrication remains within said

suspension fork or shock absorber and such that when excessive air pressure in said suspension fork or shock absorber is relieved at high elevation, said substantial portion of said oil bath lubrication that is leveled in said lower fork remains within said lower fork.

11. (New) The fluid equalization system of claim 10, wherein said first region of said suspension fork or shock absorber having said first pressure is one of an interior of said suspension fork or shock absorber and an exterior of said suspension fork or shock absorber.

12. (New) The fluid equalization system of claim 10, wherein said second region having said second pressure is one of an interior of said suspension fork or shock absorber and an exterior of said suspension fork or shock absorber.

13. (New) The fluid equalization system of claim 10, wherein said first position comprises:

a sealing o-ring partially enclosed by a valve activator; and

a spring, said sealing o-ring comprising:

a sealed position, wherein when in said sealed position, said spring biases said valve activator toward a closed position and said sealing o-ring presses against a sealing bore such that air pressure does not pass into or out of said suspension fork or shock absorber.

14. (New) The fluid equalization system of claim 13, wherein said valve activator comprises:

a button configured for being pressed for activation or deactivation.

15. (New) The fluid equalization system of claim 10, wherein said valve activator is positioned on a die-cast feature of said suspension.

16. (New) The fluid equalization system of claim 10, wherein said second position comprises:

a diametrical recess;

a sealing o-ring partially enclosed by a valve activator; and

a spring, said sealing o-ring comprising:

an unsealed position, wherein when in said unsealed position, said sealing o-ring moves into said diametrical recess, thereby letting air pressure by-pass into or out of said suspension fork or shock absorber.

17. (New) A shock absorber comprising:

a damper comprising:

an upper leg/lower leg assembly, said upper leg/lower leg assembly comprising:

an upper fork tube;

a lower fork tube, wherein said upper fork tube is telescopically positioned within said lower fork tube and enters said lower fork tube at a

first end of said lower fork tube, said first end of said lower fork tube comprising:

a lower leg seal located at an outermost edge of said first end of said lower fork tube, said lower leg seal configured for sealing closed a gap disposed between said upper fork tube and said lower fork tube, thereby preventing an oil bath lubrication occupying an area within said lower fork tube at a second end of said lower fork tube from leaking out of said damper, said second end being opposite said first end; and

an upper bushing attached to and positioned adjacent to said lower leg seal; and

an air bleed system located directly below said lower leg seal and positioned closer to a second end of said lower fork tube than said lower leg seal is positioned on said lower fork tube, said air bleed system configured for equalizing ambient pressure within said damper by opening to release excessive air pressure from said damper, said air bleed system comprising:

a fluid passage between an interior of the suspension and an exterior of the suspension; and

a manually operable valve located in said lower leg assembly, said manually operable valve having a first position substantially closing said fluid passage and a second position allowing a fluid to flow between said interior and said exterior, wherein said fluid passage and said manually operable valve are positioned at a distance from said oil bath lubrication,

such that when said manually operable valve is in said second position, a substantial portion of said oil bath lubrication remains within said lower leg assembly and such that when excessive air pressure in said lower leg assembly is relieved at high elevation, said substantial portion of said oil bath lubrication that is leveled in said lower leg assembly remains within said lower leg assembly.

REMARKS

Claim 1 is pending. Claim 1 is amended herein. Claims 2-17 are new. No new matter is added as a result of the amendments.

Double Patenting

Claim 1 is rejected under 35 U.S.C. 101, as claiming the same invention of prior U.S. Patent No. 9,103,400. The rejection is respectfully traversed for the following rationale.

Applicants have amended Independent Claim 1 and added new Claims 2-17 and respectfully submit that these claims are not directed to the same invention of prior U.S. Patent No. 9,103,400. As such, Applicants respectfully request the rejection be removed.

CLAIM REJECTIONS

35 U.S.C. §102(a) Rejections

Claim 1

The instant Office Action states that Claim 1 is rejected under 35 U.S.C. §102(a) as being anticipated by Galasso et al. (US 2012/0080279) (hereinafter, "Galasso"). Applicants respectfully traverse the rejection for the following rationale.

Applicant respectfully points out that amended Claim 1 recites (emphasis added as to relevant amended language):

> An air bleed system for a lower fork of a suspension fork or shock absorber comprising:
> a fluid passage between an interior of the suspension lower fork and an exterior of the lower fork suspension; and
> a manually operable valve located in lower fork, said manually operable valve having a first position substantially closing said fluid passage and a second position allowing a fluid to flow between said interior and said exterior, wherein said fluid passage and said manually operable valve are positioned at a distance from an oil bath lubrication within said suspension fork or shock absorber, such that when said manually operable valve is in said second position, a substantial portion of said oil bath lubrication remains within said suspension fork or shock absorber and such that when excessive air pressure in said suspension fork or shock absorber is relieved at high elevation, said substantial portion of said oil bath lubrication that is leveled in said lower fork remains within said lower fork.

MPEP §2131 provides:

> "A claim is anticipated only if each and every element as set forth in the claim is found, either expressly or inherently described, in a single prior art reference". MPEP §2131; *Verdegaal Bros. v. Union Oil Co. of California*, 814 F.2d 628, 631, 2 USPQ2d 1051, 103 (Fed. Cir. 1987). ... "The identical invention must be shown

> in as complete detail as is contained in the ... claim." *Richardson v. Suzuki Motor Co.*, 868 F.2d 1226, 1236, 9 USPQ2d 1913, 1920 (Fed. Cir. 1989). "The elements must be arranged as required by the claim..." *In re Bond*, 910 F.2d 831, 15 USPQ2d 1913, 1920 (Fed. Cir. 1989).

Applicant understands Galasso to disclose "METHODS AND APPARATUS FOR SAG ADJUSTMENT" (Galasso, Title) in which an "integrated damper/gas spring shock absorber includes a bleed port located at a position on a gas spring cylinder corresponding to a desired sag setting" (Galasso, Abstract). Galasso provides techniques for easily adjusting an amount of preload applied to a spring in a shock absorber. (Galasso, paragraph [0007].)

More particularly, Applicant understands Galasso to provide, and with reference to Figure 2 and paragraphs [0027]-[0028] of Galasso, a <u>damping fluid cylinder 220 telescopically housed within the gas cylinder 210</u>. The damping fluid cylinder 220 is coupled to the piston 216 <u>on a sealed, upper end of the damping fluid cylinder 220</u> and is <u>movably mounted</u> within the gas cylinder 210. Additionally, the sag setting bleed port 224 functions to allow air to "bleed from the positive air spring 242 until the load on the shock absorber 200 from the weight of the rider forces the piston 216 to move to a position where the sealing element 218 abuts the inner surface of the sag setting bleed port 224" (Galasso, paragraph [0031]).

Thus, as can be seen, Galasso functions to allow air to bleed from the gas cylinder (more specifically, the positive air spring 242) to the exterior of the shock absorber such that the load on the shock absorber 200 from the weight of the rider is satisfactorily adjusted. (Galasso, paragraph [0031].)

Galasso is structured to accomplish this task by locating the SAG setting bleed port 224 at some position on the gas spring cylinder 210 and above the section that creates a seal between the damping fluid cylinder 220 (holding an oil bath) and the gas cylinder 210, wherein the SAG setting bleed port 224 is closer to the frame of the vehicle than the seal that is located between the damping fluid cylinder 220 and the gas cylinder 210. (Galasso, paragraph [0031].)

In contrast to Galasso, Applicant's features locate its air bleed system that includes fluid passage and a manually operable valve in the lower fork of the shock absorber. Thus, the air bleed system, including the manually operable valve and the fluid passage, is located on the lower fork tube. Additionally, Applicants Independent Claims include the features of "said oil bath lubrication remains within said suspension fork or shock absorber and such that when excessive air pressure in said suspension fork or shock absorber is relieved at high elevation, said substantial portion of said oil bath lubrication that is leveled in said lower fork remains within said lower fork."

Due to the positioning of Applicant's air bleed system being located within the lower fork tube, Applicant's features enable the release of excessive air pressure from the lower fork tube, thereby reducing the pressure and load being applied to the lower oil control lip of the lower leg seal, while enabling the oil bath lubrication to remain fairly leveled at the bottom of the lower fork tube, without spraying/leaking out through the open vent hole.

Applicant's features allow for the pressure in the lower leg to be equalized to ambient pressure at the higher elevation, and therefore restore the desired friction in the lower fork tube in relation to the upper fork tube. Thus, in sum, the air bleed assembly is located right below Applicant's lower leg seal, and far enough away from the oil bath lubrication such that a substantial portion of the oil bath lubrication is enabled to remain within the lower fork tube even when air is being released from the lower fork tube through the vent hole of the air bleed assembly.

Galasso, on the other hand, includes a SAG setting bleed port 224 that is positioned above a seal between the gas cylinder 210 and the damping fluid cylinder 220. Galasso functions to allow air to be released from a cylinder that is not a cylinder that contains an oil bath lubrication. If Applicant's air bleed system were positioned above the seal that lies between the lower fork tube and the upper fork tube, then when the air bleed system is opened to allow for the escape of excessive air pressure from the damper, the pressure that is being applied on the lower oil control lip of the lower leg seal would not be reduced, as the pressure that is being applied is from the direction of the lower fork tube and not the upper fork tube.

Therefore, Applicant respectfully submit that Galasso does not anticipate the features as are set forth in independent Claim 1, and as such, Claim 1 traverses the rejection under 35 U.S.C. §102(a) and is in condition for allowance.

Accordingly, Applicant also respectfully submits that new Claims 2-17 are also in condition for allowance based on the rationale presented above.

CONCLUSION

In light of the above-listed remarks and amendments, Applicant respectfully requests allowance of the Claims 1-17.

The Examiner is invited to contact Applicant's undersigned representative if the Examiner believes such action would expedite resolution of the present Application.

In the event this paper is not timely filed, Applicant petitions for an appropriate extension of time. Please charge any fee deficiencies or credit any overpayments to Deposit Account No. 50-4157 with reference to our Docket No. FOX-P5-08-12-US.CON.

Respectfully submitted,

Wagner Blecher LLP

Date: 12/29/2015

/John P. Wagner, Jr./

John P. Wagner, Jr.
Reg. No. 35,398

WESTRIDGE BUSINESS PARK
123 WESTRIDGE DRIVE
WATSONVILLE, CALIFORNIA 95076
(408) 377-0500

PTO/SB/08a (01-10)
Approved for use through 07/31/2012. OMB 0651-0031
U.S. Patent and Trademark Office; U.S. DEPARTMENT OF COMMERCE

Under the Paperwork Reduction Act of 1995, no persons are required to respond to a collection of information unless it contains a valid OMB control number.

INFORMATION DISCLOSURE STATEMENT BY APPLICANT

(Not for submission under 37 CFR 1.99)

Application Number	14822859
Filing Date	2015-08-10
First Named Inventor	BECKER
Art Unit	3657
Examiner Name	Vishal R. SAHNI
Attorney Docket Number	FOX-P5-08-12-US.CON

U.S.PATENTS Remove

Examiner Initial*	Cite No	Patent Number	Kind Code[1]	Issue Date	Name of Patentee or Applicant of cited Document	Pages,Columns,Lines where Relevant Passages or Relevant Figures Appear
	1	5503258	A	1996-04-02	CLARKE, et al.	
	2	5697477	A	1997-12-16	HIRAMOTO;, et al.	
	3	5816281	A	1998-10-06	MIXON;	
	4	5853071	A	1998-12-29	ROBINSON;	
	5	6592136		2003-07-15	BECKER, et al.	
	6	7255210	B2	2007-08-14	LARSSON, et al.	
	7	8480064	B2	2013-07-09	TALAVASEK	
	8	9103400		2015-08-11	BECKER	

If you wish to add additional U.S. Patent citation information please click the Add button. Add

INFORMATION DISCLOSURE STATEMENT BY APPLICANT (Not for submission under 37 CFR 1.99)		
	Application Number	14822859
	Filing Date	2015-08-10
	First Named Inventor	BECKER
	Art Unit	3657
	Examiner Name	Vishal R. SAHNI
	Attorney Docket Number	FOX-P5-08-12-US.CON

U.S.PATENT APPLICATION PUBLICATIONS Remove

Examiner Initial*	Cite No	Publication Number	Kind Code[1]	Publication Date	Name of Patentee or Applicant of cited Document	Pages,Columns,Lines where Relevant Passages or Relevant Figures Appear
	1	20030001358	A1	2003-01-02	BECKER, et al.	
	2	20060289258	A1	2006-12-28	FOX	
	3	20100186836	A1	2010-07-29	YOSHIHIRO, et al.	
	4	20120007327	A1	2012-01-12	TALAVASEK	
	5	20120080279	A1	2012-04-05	GALASSO, et al.	
	6	20130319805	A1	2013-12-05	BECKER, et al.	

If you wish to add additional U.S. Published Application citation information please click the Add button. Add

FOREIGN PATENT DOCUMENTS Remove

Examiner Initial*	Cite No	Foreign Document Number[3]	Country Code[2] i	Kind Code[4]	Publication Date	Name of Patentee or Applicant of cited Document	Pages,Columns,Lines where Relevant Passages or Relevant Figures Appear	T[5]
	1							

If you wish to add additional Foreign Patent Document citation information please click the Add button Add

NON-PATENT LITERATURE DOCUMENTS Remove

EFS Web 2.1.17

INFORMATION DISCLOSURE STATEMENT BY APPLICANT (Not for submission under 37 CFR 1.99)	Application Number	14822859
	Filing Date	2015-08-10
	First Named Inventor	BECKER
	Art Unit	3657
	Examiner Name	Vishal R. SAHNI
	Attorney Docket Number	FOX-P5-08-12-US.CON

Examiner Initials*	Cite No	Include name of the author (in CAPITAL LETTERS), title of the article (when appropriate), title of the item (book, magazine, journal, serial, symposium, catalog, etc), date, pages(s), volume-issue number(s), publisher, city and/or country where published.	T[5]
	1		

If you wish to add additional non-patent literature document citation information please click the Add button Add

EXAMINER SIGNATURE

Examiner Signature		Date Considered	

*EXAMINER: Initial if reference considered, whether or not citation is in conformance with MPEP 609. Draw line through a citation if not in conformance and not considered. Include copy of this form with next communication to applicant.

[1] See Kind Codes of USPTO Patent Documents at www.USPTO.GOV or MPEP 901.04. [2] Enter office that issued the document, by the two-letter code (WIPO Standard ST.3). [3] For Japanese patent documents, the indication of the year of the reign of the Emperor must precede the serial number of the patent document. [4] Kind of document by the appropriate symbols as indicated on the document under WIPO Standard ST.16 if possible. [5] Applicant is to place a check mark here if English language translation is attached.

INFORMATION DISCLOSURE STATEMENT BY APPLICANT (Not for submission under 37 CFR 1.99)		
	Application Number	14822859
	Filing Date	2015-08-10
	First Named Inventor	BECKER
	Art Unit	3657
	Examiner Name	Vishal R. SAHNI
	Attorney Docket Number	FOX-P5-08-12-US.CON

CERTIFICATION STATEMENT

Please see 37 CFR 1.97 and 1.98 to make the appropriate selection(s):

That each item of information contained in the information disclosure statement was first cited in any communication from a foreign patent office in a counterpart foreign application not more than three months prior to the filing of the information disclosure statement. See 37 CFR 1.97(e)(1).

OR

☐ That no item of information contained in the information disclosure statement was cited in a communication from a foreign patent office in a counterpart foreign application, and, to the knowledge of the person signing the certification after making reasonable inquiry, no item of information contained in the information disclosure statement was known to any individual designated in 37 CFR 1.56(c) more than three months prior to the filing of the information disclosure statement. See 37 CFR 1.97(e)(2).

See attached certification statement.

☒ The fee set forth in 37 CFR 1.17 (p) has been submitted herewith.

A certification statement is not submitted herewith.

SIGNATURE

A signature of the applicant or representative is required in accordance with CFR 1.33, 10.18. Please see CFR 1.4(d) for the form of the signature.

Signature	/John P. Wagner, Jr./	Date (YYYY-MM-DD)	2015-12-29
Name/Print	John P. Wagner, Jr.	Registration Number	35,398

This collection of information is required by 37 CFR 1.97 and 1.98. The information is required to obtain or retain a benefit by the public which is to file (and by the USPTO to process) an application. Confidentiality is governed by 35 U.S.C. 122 and 37 CFR 1.14. This collection is estimated to take 1 hour to complete, including gathering, preparing and submitting the completed application form to the USPTO. Time will vary depending upon the individual case. Any comments on the amount of time you require to complete this form and/or suggestions for reducing this burden, should be sent to the Chief Information Officer, U.S. Patent and Trademark Office, U.S. Department of Commerce, P.O. Box 1450, Alexandria, VA 22313-1450. DO NOT SEND FEES OR COMPLETED FORMS TO THIS ADDRESS. **SEND TO: Commissioner for Patents, P.O. Box 1450, Alexandria, VA 22313-1450.**

Privacy Act Statement

The Privacy Act of 1974 (P.L. 93-579) requires that you be given certain information in connection with your submission of the attached form related to a patent application or patent. Accordingly, pursuant to the requirements of the Act, please be advised that: (1) the general authority for the collection of this information is 35 U.S.C. 2(b)(2); (2) furnishing of the information solicited is voluntary; and (3) the principal purpose for which the information is used by the U.S. Patent and Trademark Office is to process and/or examine your submission related to a patent application or patent. If you do not furnish the requested information, the U.S. Patent and Trademark Office may not be able to process and/or examine your submission, which may result in termination of proceedings or abandonment of the application or expiration of the patent.

The information provided by you in this form will be subject to the following routine uses:

1. The information on this form will be treated confidentially to the extent allowed under the Freedom of Information Act (5 U.S.C. 552) and the Privacy Act (5 U.S.C. 552a). Records from this system of records may be disclosed to the Department of Justice to determine whether the Freedom of Information Act requires disclosure of these record s.

2. A record from this system of records may be disclosed, as a routine use, in the course of presenting evidence to a court, magistrate, or administrative tribunal, including disclosures to opposing counsel in the course of settlement negotiations.

3. A record in this system of records may be disclosed, as a routine use, to a Member of Congress submitting a request involving an individual, to whom the record pertains, when the individual has requested assistance from the Member with respect to the subject matter of the record.

4. A record in this system of records may be disclosed, as a routine use, to a contractor of the Agency having need for the information in order to perform a contract. Recipients of information shall be required to comply with the requirements of the Privacy Act of 1974, as amended, pursuant to 5 U.S.C. 552a(m).

5. A record related to an International Application filed under the Patent Cooperation Treaty in this system of records may be disclosed, as a routine use, to the International Bureau of the World Intellectual Property Organization, pursuant to the Patent Cooperation Treaty.

6. A record in this system of records may be disclosed, as a routine use, to another federal agency for purposes of National Security review (35 U.S.C. 181) and for review pursuant to the Atomic Energy Act (42 U.S.C. 218(c)).

7. A record from this system of records may be disclosed, as a routine use, to the Administrator, General Services, or his/her designee, during an inspection of records conducted by GSA as part of that agency's responsibility to recommend improvements in records management practices and programs, under authority of 44 U.S.C. 2904 and 2906. Such disclosure shall be made in accordance with the GSA regulations governing inspection of records for this purpose, and any other relevant (i.e., GSA or Commerce) directive. Such disclosure shall not be used to make determinations about individuals.

8. A record from this system of records may be disclosed, as a routine use, to the public after either publication of the application pursuant to 35 U.S.C. 122(b) or issuance of a patent pursuant to 35 U.S.C. 151. Further, a record may be disclosed, subject to the limitations of 37 CFR 1.14, as a routine use, to the public if the record was filed in an application which became abandoned or in which the proceedings were terminated and which application is referenced by either a published application, an application open to public inspections or an issued patent.

9. A record from this system of records may be disclosed, as a routine use, to a Federal, State, or local law enforcement agency, if the USPTO becomes aware of a violation or potential violation of law or regulation.

Electronic Patent Application Fee Transmittal

Application Number:	14822859
Filing Date:	10-Aug-2015
Title of Invention:	METHOD AND APPARATUS FOR AN ADJUSTABLE DAMPER
First Named Inventor/Applicant Name:	William M. Becker
Filer:	John Paul Wagner Jr./Robert Condon
Attorney Docket Number:	FOX-P5-08-12-US.CON

Filed as Large Entity

Filing Fees for Utility under 35 USC 111(a)

Description	Fee Code	Quantity	Amount	Sub-Total in USD($)
Basic Filing:				
Pages:				
Claims:				
Miscellaneous-Filing:				
Petition:				
Patent-Appeals-and-Interference:				
Post-Allowance-and-Post-Issuance:				
Extension-of-Time:				

Description	Fee Code	Quantity	Amount	Sub-Total in USD($)
Miscellaneous:				
Submission- Information Disclosure Stmt	1806	1	180	180
		Total in USD ($)		**180**

Electronic Acknowledgement Receipt	
EFS ID:	24480639
Application Number:	14822859
International Application Number:	
Confirmation Number:	6345
Title of Invention:	METHOD AND APPARATUS FOR AN ADJUSTABLE DAMPER
First Named Inventor/Applicant Name:	William M. Becker
Customer Number:	70408
Filer:	John Paul Wagner Jr./Robert Condon
Filer Authorized By:	John Paul Wagner Jr.
Attorney Docket Number:	FOX-P5-08-12-US.CON
Receipt Date:	29-DEC-2015
Filing Date:	10-AUG-2015
Time Stamp:	15:18:26
Application Type:	Utility under 35 USC 111(a)

Payment information:

Submitted with Payment	yes
Payment Type	Deposit Account
Payment was successfully received in RAM	$180
RAM confirmation Number	1862
Deposit Account	504157
Authorized User	WAGNER, JOHN P.
The Director of the USPTO is hereby authorized to charge indicated fees and credit any overpayment as follows: Charge any Additional Fees required under 37 CFR 1.16 (National application filing, search, and examination fees) Charge any Additional Fees required under 37 CFR 1.17 (Patent application and reexamination processing fees)	

Charge any Additional Fees required under 37 CFR 1.19 (Document supply fees)

Charge any Additional Fees required under 37 CFR 1.20 (Post Issuance fees)

Charge any Additional Fees required under 37 CFR 1.21 (Miscellaneous fees and charges)

File Listing:

Document Number	Document Description	File Name	File Size(Bytes)/ Message Digest	Multi Part /.zip	Pages (if appl.)
1		FOX-P5-08-12-USCON_20151229_RESP.pdf	157682 f4049c39fe29effb35970828230e30b49253c3b2	yes	17
	Multipart Description/PDF files in .zip description				
	Document Description		**Start**	**End**	
	Transmittal Letter		1	1	
	Transmittal Letter		2	2	
	Amendment/Req. Reconsideration-After Non-Final Reject		3	3	
	Claims		4	10	
	Applicant Arguments/Remarks Made in an Amendment		11	17	
Warnings:					
Information:					
2	Information Disclosure Statement (IDS) Form (SB08)	FOX-P5-08-12-USCON_20151229_IDS.pdf	612670 0ff06b89deb66b3a0e177464655dd9496e10f70b	no	5
Warnings:					
Information:					
3	Fee Worksheet (SB06)	fee-info.pdf	30719 2ff0abb13b92087237e31960ddf24e7b9df0ed0b	no	2
Warnings:					
Information:					
		Total Files Size (in bytes):	801071		

This Acknowledgement Receipt evidences receipt on the noted date by the USPTO of the indicated documents, characterized by the applicant, and including page counts, where applicable. It serves as evidence of receipt similar to a Post Card, as described in MPEP 503.

New Applications Under 35 U.S.C. 111
If a new application is being filed and the application includes the necessary components for a filing date (see 37 CFR 1.53(b)-(d) and MPEP 506), a Filing Receipt (37 CFR 1.54) will be issued in due course and the date shown on this Acknowledgement Receipt will establish the filing date of the application.

National Stage of an International Application under 35 U.S.C. 371
If a timely submission to enter the national stage of an international application is compliant with the conditions of 35 U.S.C. 371 and other applicable requirements a Form PCT/DO/EO/903 indicating acceptance of the application as a national stage submission under 35 U.S.C. 371 will be issued in addition to the Filing Receipt, in due course.

New International Application Filed with the USPTO as a Receiving Office
If a new international application is being filed and the international application includes the necessary components for an international filing date (see PCT Article 11 and MPEP 1810), a Notification of the International Application Number and of the International Filing Date (Form PCT/RO/105) will be issued in due course, subject to prescriptions concerning national security, and the date shown on this Acknowledgement Receipt will establish the international filing date of the application.

WAGNER BLECHER LLP
123 Westridge Drive
Watsonville, CA 95076
(408) 377-0500

PATENT APPLICATION

ATTORNEY DOCKET NO. FOX-P5-08-12-US.CON

Inventor(s): William BECKER

Application No.: 14/822,859

Filing Date: August 10, 2015

Confirmation No.: 6345

Examiner: Vishal R. SAHNI

Group Art Unit: 3657

Title: METHOD AND APPARATUS FOR AN ADJUSTABLE DAMPER

Mail Stop Amendment
Commissioner For Patents
PO Box 1450
Alexandria, VA 22313-1450

TRANSMITTAL LETTER FOR RESPONSE/AMENDMENT

Transmitted herewith is/are the following in the above-identified application:

- [✓] Response/Amendment
- [✓] New fee as calculated below
- [ ] No additional fee
- [✓] Other Supplemental IDS
- [ ] Petition to extend time to respond
- [ ] Supplemental Declaration

Fee$ 180

CLAIMS AS AMENDED BY OTHER THAN A SMALL ENTITY						
(1) FOR	(2) CLAIMS REMAINING AFTER AMENDMENT	(3) NUMBER EXTRA	(4) HIGHEST NUMBER PREVIOUSLY PAID FOR	(5) PRESENT EXTRA	(6) RATE	(7) ADDITIONAL FEES
TOTAL CLAIMS	17	MINUS	20	= 0	X $80	$ 0
INDEP. CLAIMS	3	MINUS	3	= 0	X $420	$ 0
[ ] FIRST PRESENTATION OF A MULTIPLE DEPENDENT CLAIM					+ $780	$ 0
EXTENSION FEE	[ ] 1st Month $200	[ ] 2nd Month $600	[ ] 3rdMonth $1,400	[ ] 4th Month $2,200		$ 0
OTHER FEES						$ 180
TOTAL ADDITIONAL FEE FOR THIS AMENDMENT						$ 180

Please charge Deposit Account 50-4157 the sum of $ 180. At any time during the pendency of this application, please charge any fees required or credit any over payment to Deposit Account 50-4157 pursuant to 37 CFR 1.25. Additionally charge any fees to Deposit Account 50-4157 under 37 CFR 1.16 through 1.21 inclusive, and any other sections in Title 37 of the Code of Federal Regulations that may regulate fees. A duplicate copy of this sheet is enclosed.

[ ] I hereby certify that this correspondence is being deposited with the United States Postal Service as first class mail in an envelope addressed to: Commissioner for Patents, Alexandria, VA 22313-1450

Date of Deposit:

OR

[✓] I hereby certify that this paper is being transmitted to the Patent and Trademark Office facsimile number (571)273-8300 or via Electronic Filing.

Date of facsimile/transmission: 12/29/2015

Typed Name: Robert Condon

Signature: /Robert Condon/

Respectfully submitted,
Fox Factory, Inc.

By /John P. Wagner, Jr./

John P. Wagner, Jr.

Attorney/Agent for Applicant(s)

Reg No. : 35,398

Date : 12/29/2015

Telephone : 408-377-0500

WAGNER BLECHER LLP
123 Westridge Drive
Watsonville, CA 95076
(408)377-0500

PATENT APPLICATION

ATTORNEY DOCKET NO. FOX-P5-08-12-US.CON

IN THE UNITED STATES PATENT AND TRADEMARK OFFICE

Inventor(s): William BECKER

Confirmation No.: 6345

Application No.: 14/822,859

Examiner: Vishal R. SAHNI

Filing Date: August 10, 2015

Group Art Unit: 3657

Title: METHOD AND APPARATUS FOR AN ADJUSTABLE DAMPER

Mail Stop Amendment
Commissioner For Patents
PO Box 1450
Alexandria, VA 22313-1450

INFORMATION DISCLOSURE STATEMENT

This Information Disclosure Statement is submitted:

☐ under 37 CFR 1.97 (b), or
(Within three months of filing national application; or date of entry of national application; or before mailing date of first action on the merits; whichever occurs last)

☑ under 37 CFR 1.97 (c), together with either a:
☐ Statement under 37 CFR 1.97 (e), or ☑ a $180 fee under 37 CFR 1.17 (p), or
(After the CFR 1.97 (b) time period, but before final action or notice of allowance, whichever occurs first)

☐ under 37 CFR 1.97 (d), together with either a:
☐ Statement under 37 CFR 1.97 (e)(1) or (2), and ☐ a $180 fee set forth in 37 CFR 1.17 (p)
(Filed after final action, a notice of allowance, on or before payment of the issue fee)

Please charge Deposit Account 50-4157 in the sum of $ 180 . At any time during the pendency of this application, please charge any fees required or credit any over payment to Deposit Account 50-4157 pursuant to 37 CFR 1.25.

Applicant(s) submit herewith form PTO 1449 - Information Disclosure Statement together with any required copies of patents, publications or other information of which applicant(s) are aware, which applicant(s) believe(s) may be material to the examination of this application and for which there may be a duty to disclose in accordance with 37 CFR 1.56.

☐ Copies of the foreign and non-patent literature references are not submitted pursuant to 37 CFR 1.98(d) as they are of record in US Patent Application No. filed which is the parent application and is relied upon for an earlier filing date under 35 USC § 120.

☐ A concise explanation of the relevance of foreign language patents, foreign language publications and other foreign language information listed on PTO Form 1449, as presently understood by the individual(s) designated in 37 CFR 1.56 (c) most knowledgeable about the content is given on the attached sheet, or where a foreign language patent is cited in a search report or other action by a foreign patent office in a counterpart foreign application, an english language version of the search report or action which indicates the degree of relevance found by the foreign office is listed on form PTO 1449 and is enclosed.

It is requested that the information disclosed herein be made of record in this application.

☐ I hereby certify that this correspondence is being deposited with the United States Postal Service as "Express Mail Post Office to Addressee" service under 37 CFR 1.10 on the date indicated below or via First Class Mail and is addressed to:
Commissioner for Patents, Alexandria, VA 22313-1450

Date of Deposit:

Express Mail Label No.:

OR

☑ I hereby certify that this paper is being transmitted to the Patent and Trademark Office via facsimile number (571)273-8300 or via Electronic Filing.

Date of facsimile/transmission: 12/29/2015

Typed Name: Robert Condon

Signature: /Robert Condon/

Respectfully submitted,

Fox Factory, Inc.

By /John P. Wagner, Jr./

John P. Wagner, Jr.

Attorney/Agent for Applicant(s)

Reg No. : 35,398

Date : 12/29/2015

Telephone : 408-377-0500

PTO/SB/06 (09-11)
Approved for use through 1/31/2014. OMB 0651-0032
U.S. Patent and Trademark Office; U.S. DEPARTMENT OF COMMERCE
Under the Paperwork Reduction Act of 1995, no persons are required to respond to a collection of information unless it displays a valid OMB control number.

PATENT APPLICATION FEE DETERMINATION RECORD Substitute for Form PTO-875	Application or Docket Number 14/822,859	Filing Date 08/10/2015	☐ To be Mailed

ENTITY: ☒ LARGE ☐ SMALL ☐ MICRO

APPLICATION AS FILED – PART I

FOR	(Column 1) NUMBER FILED	(Column 2) NUMBER EXTRA	RATE ($)	FEE ($)
☐ BASIC FEE (37 CFR 1.16(a), (b), or (c))	N/A	N/A	N/A	
☐ SEARCH FEE (37 CFR 1.16(k), (i), or (m))	N/A	N/A	N/A	
☐ EXAMINATION FEE (37 CFR 1.16(o), (p), or (q))	N/A	N/A	N/A	
TOTAL CLAIMS (37 CFR 1.16(i))	minus 20 =	*	X $ =	
INDEPENDENT CLAIMS (37 CFR 1.16(h))	minus 3 =	*	X $ =	
☐ APPLICATION SIZE FEE (37 CFR 1.16(s))	If the specification and drawings exceed 100 sheets of paper, the application size fee due is $310 ($155 for small entity) for each additional 50 sheets or fraction thereof. See 35 U.S.C. 41(a)(1)(G) and 37 CFR 1.16(s).			
☐ MULTIPLE DEPENDENT CLAIM PRESENT (37 CFR 1.16(j))				
* If the difference in column 1 is less than zero, enter "0" in column 2.			TOTAL	

APPLICATION AS AMENDED – PART II

AMENDMENT

12/29/2015	(Column 1) CLAIMS REMAINING AFTER AMENDMENT		(Column 2) HIGHEST NUMBER PREVIOUSLY PAID FOR	(Column 3) PRESENT EXTRA	RATE ($)	ADDITIONAL FEE ($)
Total (37 CFR 1.16(i))	* 17	Minus	** 20	= 0	X $80 =	0
Independent (37 CFR 1.16(h))	* 3	Minus	***3	= 0	X $420 =	0
☐ Application Size Fee (37 CFR 1.16(s))						
☐ FIRST PRESENTATION OF MULTIPLE DEPENDENT CLAIM (37 CFR 1.16(j))						
					TOTAL ADD'L FEE	0

AMENDMENT

	(Column 1) CLAIMS REMAINING AFTER AMENDMENT		(Column 2) HIGHEST NUMBER PREVIOUSLY PAID FOR	(Column 3) PRESENT EXTRA	RATE ($)	ADDITIONAL FEE ($)
Total (37 CFR 1.16(i))	*	Minus	**	=	X $ =	
Independent (37 CFR 1.16(h))	*	Minus	***	=	X $ =	
☐ Application Size Fee (37 CFR 1.16(s))						
☐ FIRST PRESENTATION OF MULTIPLE DEPENDENT CLAIM (37 CFR 1.16(j))						
					TOTAL ADD'L FEE	

* If the entry in column 1 is less than the entry in column 2, write "0" in column 3.
** If the "Highest Number Previously Paid For" IN THIS SPACE is less than 20, enter "20".
*** If the "Highest Number Previously Paid For" IN THIS SPACE is less than 3, enter "3".
The "Highest Number Previously Paid For" (Total or Independent) is the highest number found in the appropriate box in column 1.

LIE
/TARA WASHINGTON/

This collection of information is required by 37 CFR 1.16. The information is required to obtain or retain a benefit by the public which is to file (and by the USPTO to process) an application. Confidentiality is governed by 35 U.S.C. 122 and 37 CFR 1.14. This collection is estimated to take 12 minutes to complete, including gathering, preparing, and submitting the completed application form to the USPTO. Time will vary depending upon the individual case. Any comments on the amount of time you require to complete this form and/or suggestions for reducing this burden, should be sent to the Chief Information Officer, U.S. Patent and Trademark Office, U.S. Department of Commerce, P.O. Box 1450, Alexandria, VA 22313-1450. DO NOT SEND FEES OR COMPLETED FORMS TO THIS ADDRESS. **SEND TO: Commissioner for Patents, P.O. Box 1450, Alexandria, VA 22313-1450.**
If you need assistance in completing the form, call 1-800-PTO-9199 and select option 2.

UNITED STATES PATENT AND TRADEMARK OFFICE

UNITED STATES DEPARTMENT OF COMMERCE
United States Patent and Trademark Office
Address: COMMISSIONER FOR PATENTS
P.O. Box 1450
Alexandria, Virginia 22313-1450
www.uspto.gov

APPLICATION NO.	FILING DATE	FIRST NAMED INVENTOR	ATTORNEY DOCKET NO.	CONFIRMATION NO.
14/822,859	08/10/2015	William M. Becker	FOX-P5-08-12-US.CON	6345

70408 7590 02/23/2016
FOX C/O WAGNER BLECHER LLP
123 WESTRIDGE DRIVE
WATSONVILLE, CA 95076

EXAMINER
SAHNI, VISHAL R

ART UNIT	PAPER NUMBER
3657	

NOTIFICATION DATE	DELIVERY MODE
02/23/2016	ELECTRONIC

Please find below and/or attached an Office communication concerning this application or proceeding.

The time period for reply, if any, is set in the attached communication.

Notice of the Office communication was sent electronically on above-indicated "Notification Date" to the following e-mail address(es):

patents@wagnerblecher.com

PTOL-90A (Rev. 04/07)

Office Action Summary	Application No. 14/822,859	Applicant(s) BECKER, WILLIAM M.	
	Examiner VISHAL SAHNI	Art Unit 3657	AIA (First Inventor to File) Status No

-- The MAILING DATE of this communication appears on the cover sheet with the correspondence address --

Period for Reply

A SHORTENED STATUTORY PERIOD FOR REPLY IS SET TO EXPIRE 3 MONTHS FROM THE MAILING DATE OF THIS COMMUNICATION.

- Extensions of time may be available under the provisions of 37 CFR 1.136(a). In no event, however, may a reply be timely filed after SIX (6) MONTHS from the mailing date of this communication.
- If NO period for reply is specified above, the maximum statutory period will apply and will expire SIX (6) MONTHS from the mailing date of this communication.
- Failure to reply within the set or extended period for reply will, by statute, cause the application to become ABANDONED (35 U.S.C. § 133). Any reply received by the Office later than three months after the mailing date of this communication, even if timely filed, may reduce any earned patent term adjustment. See 37 CFR 1.704(b).

Status

1)☒ Responsive to communication(s) filed on 12/29/15.

☐ A declaration(s)/affidavit(s) under **37 CFR 1.130(b)** was/were filed on _____.

2a)☒ This action is **FINAL**. 2b)☐ This action is non-final.

3)☐ An election was made by the applicant in response to a restriction requirement set forth during the interview on _____; the restriction requirement and election have been incorporated into this action.

4)☐ Since this application is in condition for allowance except for formal matters, prosecution as to the merits is closed in accordance with the practice under *Ex parte Quayle*, 1935 C.D. 11, 453 O.G. 213.

Disposition of Claims*

5)☒ Claim(s) 1-17 is/are pending in the application.

5a) Of the above claim(s) _____ is/are withdrawn from consideration.

6)☐ Claim(s) _____ is/are allowed.

7)☒ Claim(s) 1-17 is/are rejected.

8)☐ Claim(s) _____ is/are objected to.

9)☐ Claim(s) _____ are subject to restriction and/or election requirement.

* If any claims have been determined allowable, you may be eligible to benefit from the **Patent Prosecution Highway** program at a participating intellectual property office for the corresponding application. For more information, please see http://www.uspto.gov/patents/init_events/pph/index.jsp or send an inquiry to PPHfeedback@uspto.gov.

Application Papers

10)☐ The specification is objected to by the Examiner.

11)☐ The drawing(s) filed on _____ is/are: a)☐ accepted or b)☐ objected to by the Examiner.

Applicant may not request that any objection to the drawing(s) be held in abeyance. See 37 CFR 1.85(a).

Replacement drawing sheet(s) including the correction is required if the drawing(s) is objected to. See 37 CFR 1.121(d).

Priority under 35 U.S.C. § 119

12)☐ Acknowledgment is made of a claim for foreign priority under 35 U.S.C. § 119(a)-(d) or (f).

Certified copies:

a)☐ All b)☐ Some** c)☐ None of the:

1.☐ Certified copies of the priority documents have been received.

2.☐ Certified copies of the priority documents have been received in Application No. _____.

3.☐ Copies of the certified copies of the priority documents have been received in this National Stage application from the International Bureau (PCT Rule 17.2(a)).

** See the attached detailed Office action for a list of the certified copies not received.

Attachment(s)

1) ☐ Notice of References Cited (PTO-892)

2) ☒ Information Disclosure Statement(s) (PTO/SB/08a and/or PTO/SB/08b) Paper No(s)/Mail Date 12/29/15.

3) ☐ Interview Summary (PTO-413) Paper No(s)/Mail Date. _____ .

4) ☐ Other: _____.

DETAILED ACTION

The Amendment filed 12/29/15 has been entered. Claims 1-17 are currently pending. Claims 2-17 have been newly added. Despite the claim amendments and Arguments, the previous rejections are maintained as detailed below. The present application is being examined under the pre-AIA first to invent provisions.

Claim Rejections - 35 USC § 112

The following is a quotation of 35 U.S.C. 112(b):
(b) CONCLUSION.—The specification shall conclude with one or more claims particularly pointing out and distinctly claiming the subject matter which the inventor or a joint inventor regards as the invention.

The following is a quotation of 35 U.S.C. 112 (pre-AIA), second paragraph:
The specification shall conclude with one or more claims particularly pointing out and distinctly claiming the subject matter which the applicant regards as his invention.

Claims 1-17 are rejected under 35 U.S.C. 112(b) or 35 U.S.C. 112 (pre-AIA), second paragraph, as being indefinite for failing to particularly point out and distinctly claim the subject matter which the inventor or a joint inventor, or for pre-AIA the applicant regards as the invention.

Claims 1-17 are rejected because independent claims 1, 10 and 17 all have numerous indefiniteness problems. First, the independent claims each recite that "a substantial portion" of the oil bath remains in the fork when "excessive" air pressure is relieved at "high" elevation. See, e.g., claim 1, lines 10-12. These are all relative terms that render the claims indefinite. These terms are not defined by the claim, the specification does not provide a standard for ascertaining the requisite degree, and one of ordinary skill in the art would not be reasonably apprised of the scope of the invention. Second, the independent claims each recite "said substantial portion of said

oil bath lubrication that is leveled." See, e.g., claim 1, lines 12-13. Not only is the term "leveled" vague, but this phrase lacks sufficient antecedent basis. While "a substantial portion" was previously defined (which is problematic for reasons previously discussed), is this entire portion "leveled" or is there some part of this portion that is and some part of this portion that is not. The antecedent basis issue here causes confusion and renders the limitation, and ultimately the claim, indefinite.

Claims 1-9 are further rejected because claim 1 recites "a manually operable valve located in lower fork," which is grammatically incorrect, and makes it unclear if this refers to --the-- lower fork, previously defined. See claim 1, line 5. In addition, claim 1 now recites numerous limitations pertaining to the oil bath and the suspension fork (or shock absorber), but these are not components of the claimed air bleed system, but instead components that the claimed system is intended to be used in. Since this is not a structural limitation on the air bleed system itself, it is unclear if these components are, in fact, required elements.

Appropriate correction is required.

Claim Rejections - 35 USC § 102

The following is a quotation of the appropriate paragraphs of pre-AIA 35 U.S.C. 102 that form the basis for the rejections under this section made in this Office action:

> A person shall be entitled to a patent unless –
>
> (a) the invention was known or used by others in this country, or patented or described in a printed publication in this or a foreign country, before the invention thereof by the applicant for a patent.

Galasso

Claims 1-6, 8-15 and 17 are rejected under pre-AIA 35 U.S.C. 102(a) as being anticipated by Galasso et al. (U.S. Patent Pub. No. 2012/0080279). Galasso is directed to a method and apparatus for sag adjustment. See Abstract.

Claim 1: Galasso discloses an air bleed system [see Figs. 2-4] for a lower fork of a suspension fork or shock absorber (200, 300, 400) comprising: a fluid passage (224, 424-2) between an interior (inside 210) of the lower fork and an exterior (outside 210) of the lower fork; and a manually operable valve (214, 314, 414, 470) [see para. 0037 (either a “rotary sleeve" and/or a "bleed valve" such as a Schrader-type valve)] located in lower fork [note: "lower" is a relative term], said manually operable valve having a first position substantially closing said fluid passage [see, e.g., Fig. 2 (when 236 covers 224)] and a second position allowing a fluid to flow between said interior and said exterior [see, e.g., Fig. 2 (when 214 is screwed upward such that 224 is open)]. See Figs. 2-4 (note: “lower” is a relative term, aside from the fact that these are components of the fork or shock absorber, which is not being claimed here).

Galasso further discloses that said fluid passage and said manually operable valve are positioned at a distance from an oil bath lubrication (274) within said suspension fork or shock absorber, such that when said manually operable valve is in said second position a substantial portion of said oil bath lubrication remains within said suspension fork or shock absorber and such that when excessive air pressure in said suspension fork or shock absorber is relieved at high elevation, said substantial portion of said oil bath lubrication that is leveled in said lower fork remains within said lower fork. See Figs. 2-4; see also 112 rejections above.

Note: the newly added limitations are directed to where the claimed system may be located, namely, "positioned at a distance" from a component (an oil bath) that is in a device (fork or shock absorber) that the system is intended to be used for. In other words, these limitations are an intended use, and do not place a structural limitation on the claimed air bleed system itself. The limitations concerning "excessive pressure" and a "leveled" oil bath have indefiniteness problems, which are discussed above.

Claim 2: Galasso discloses that said suspension fork or shock absorber comprises: a damper. See Figs. 2-4.

Claim 3: Galasso discloses that said fluid comprises: a gas. See Abstract.

Claim 4: Galasso discloses a valve activator (threads of 214, 314, 414 or pin of Schrader-type 470) coupled with said manually operable valve, said valve activator comprising: an activation position [see, e.g., Fig. 2 (when 214 is screwed such that 236 covers 224)] configured for, upon activation, positioning said manually operable valve into said first position; and a deactivation position [see, e.g., Fig. 2 (when 214 is screwed upward such that 224 is open)]configured for, upon deactivation, positioning said manually operable valve into said second position, and whereupon said activation, the air pressure in said suspension is equalized with the local ambient air pressure. See Figs. 2-4.

Claim 5: Galasso discloses that said valve activator comprises: a button (pin of 470) configured for being pressed for said activation and said deactivation. See Fig. 4 (pin of Schrader-type valve 470 pushed to open or close bleed port 468).

Claim 6: Galasso discloses said valve activator is positioned on a feature of said suspension. See Figs. 2-4. The fact that this “feature” is die-cast is a method of making, not a structural limitation. Also, it does not appear that this “feature” is part of the claimed apparatus, but part of the larger suspension for which this system is employed.

Claim 8: Galasso discloses said manually operable valve comprises: a spring (328) coupled with said valve activator, whereupon said deactivation, said spring biases said valve activator toward said first position. See Fig. 3.

Claim 9: Galasso discloses that said second position comprises: a sealing engagement between said sealing o-ring (236) and a seal bore (224), wherein when in said sealing engagement, said air pressure does not by-pass into or out of said suspension. See Fig. 2.

Claim 10: Galasso discloses a fluid equalization system [see Figs. 2-4] for a lower fork of a suspension fork or shock absorber (200, 300, 400) comprising: a fluid flow path (224, 424-2) between a first region of said lower fork of said suspension fork or shock absorber having a first pressure (inside 210) and a second region (outside 210) having a second pressure; and a valve member (214, 314, 414, 470) [see para. 0037 (either a “rotary sleeve" and/or a "bleed valve" such as a Schrader-type valve)] located in said lower fork of said suspension fork or said shock absorber, said valve member having a first position [see, e.g., Fig. 2 (when 236 covers 224)] substantially obstructing said flow path and a second position wherein said flow path is open [see, e.g., Fig. 2 (when 214 is screwed upward such that 224 is open)]. See Figs. 2-4 (note:

"lower" is a relative term, aside from the fact that these are components of the fork or shock absorber, which is not being claimed here).

Galasso further discloses that said fluid passage and said manually operable valve are positioned at a distance from an oil bath lubrication (274) within said suspension fork or shock absorber, such that when said manually operable valve is in said second position a substantial portion of said oil bath lubrication remains within said suspension fork or shock absorber and such that when excessive air pressure in said suspension fork or shock absorber is relieved at high elevation, said substantial portion of said oil bath lubrication that is leveled in said lower fork remains within said lower fork. See Figs. 2-4; see also 112 rejections above.

Note: these last limitations are directed to where the claimed system may be located, namely, "positioned at a distance" from a component (an oil bath) that is in a device (fork or shock absorber) that the system is intended to be used for. In other words, these limitations are an intended use, and do not place a structural limitation on the claimed air bleed system itself. The limitations concerning "excessive pressure" and a "leveled" oil bath have indefiniteness problems, which are discussed above.

Claim 11: Galasso discloses that said first region of said suspension fork or shock absorber having said first pressure is one of an interior of said suspension fork or shock absorber and an exterior of said suspension fork or shock absorber. See Fig. 2.

Claim 12: Galasso discloses that said second region having said second pressure is one of an interior of said suspension fork or shock absorber and an exterior of said suspension fork or shock absorber. See Fig. 2.

Claim 13: Galasso discloses that said first position comprises: a sealing o-ring (336-2) partially enclosed by a valve activator (314); and a spring (328), said sealing o-ring comprising: a sealed position [see Fig. 3 (336-2 at 224)], wherein when in said sealed position, said spring biases said valve activator toward a closed position and said sealing o-ring presses against a sealing bore (224) such that air pressure does not pass into or out of said suspension fork or shock absorber. See Fig. 3.

Claim 14: Galasso discloses that said valve activator comprises: a button (either 214 or 470) configured for being pressed for activation or deactivation. See Figs. 2-4.

Claim 15: see claim 6 above.

Claim 17: Galasso discloses a shock absorber [Figs. 2-4] comprising: a damper comprising: an upper leg/lower leg assembly (200, 300, 400), said upper leg/lower leg assembly comprising: an upper fork tube (220); a lower fork tube (210), wherein said upper fork tube is telescopically positioned within said lower fork tube and enters said lower fork tube at a first end (bottom of 210) of said lower fork tube, said first end of said lower fork tube comprising: a lower leg seal (seals at bottom of 210) located at an outermost edge of said first end of said lower fork tube, said lower leg seal configured for sealing closed a gap disposed between said upper fork tube and said lower fork tube, thereby preventing an oil bath lubrication occupying an area within said lower fork tube at a second end of said lower fork tube from leaking out of said damper, said second end being opposite said first end; and an upper bushing attached to and positioned adjacent to said lower leg seal; and an air bleed system (214, 314, 414, 470) located directly below said lower leg seal and positioned closer to a second end of said

lower fork tube than said lower leg seal is positioned on said lower fork tube, said air bleed system configured for equalizing ambient pressure within said damper by opening to release excessive air pressure from said damper, said air bleed system comprising: a fluid passage (224, 424-2) between an interior (inside 210) of the suspension and an exterior (outside 210) of the suspension; and a manually operable valve (214, 314, 414, 470) [see para. 0037 (either a “rotary sleeve" and/or a "bleed valve" such as a Schrader-type valve)] located in said lower leg assembly, said manually operable valve having a first position [see, e.g., Fig. 2 (when 236 covers 224)] substantially closing said fluid passage and a second position allowing a fluid to flow between said interior and said exterior [see, e.g., Fig. 2 (when 214 is screwed upward such that 224 is open)]. See Figs. 2-4.

Galasso further discloses that said fluid passage and said manually operable valve are positioned at a distance from said oil bath lubrication, such that when said manually operable valve is in said second position, a substantial portion of said oil bath lubrication remains within said lower leg assembly and such that when excessive air pressure in said lower leg assembly is relieved at high elevation, said substantial portion of said oil bath lubrication that is leveled in said lower leg assembly remains within said lower leg assembly. See Figs. 2-4; see also 112 rejections above.

Note: these last limitations concerning “excessive pressure” and a “leveled” oil bath have indefiniteness problems, which are discussed above.

Claim Rejections - 35 USC § 103

The following is a quotation of pre-AIA 35 U.S.C. 103(a) which forms the basis for all obviousness rejections set forth in this Office action:

> (a) A patent may not be obtained though the invention is not identically disclosed or described as set forth in section 102 of this title, if the differences between the subject matter sought to be patented and the prior art are such that the subject matter as a whole would have been obvious at the time the invention was made to a person having ordinary skill in the art to which said subject matter pertains. Patentability shall not be negatived by the manner in which the invention was made.

Galasso in view of Hiramoto

Claims 7 and 16 are rejected under pre-AIA 35 U.S.C. 103(a) as being unpatentable over Galasso in view of Hiramoto et al. (U.S. Patent No. 5,697,477). Hiramoto is directed to an air damper. See Abstract.

Claim 7: Galasso is relied upon as in claim 1 above. Galasso further discloses a diametrical recess (224) and a sealing o-ring (236) with a sealed and unsealed position. See Fig. 2. However, in Galasso the unsealed position is attained when the o-ring moves *out of* the diametrical recess rather than "*into* said diametrical recess."

Hiramoto discloses a diametrical recess (52); and a sealing o-ring (42) comprising: a sealed position [Fig. 5]; and an unsealed position [Fig. 4], wherein said sealed position seals the system, whereupon said activation, said sealing o-ring moves into said diametrical recess, thereby attaining said unsealed position and letting air pressure by-pass into or out of said system via a vent hole. See Figs. 4, 5. It would have been obvious to a person having ordinary skill in the art at the time of the invention to modify Galasso in this manner because the sealing o-ring can either be moved into a recess to attain a sealed position or an unseal position, so it would have been obvious to try one of these two options.

Claim 16: Galasso is relied upon as in claim 10 above. This limitation is addressed in claim 7 above. See obviousness statement above.

Response to Arguments

Applicant's arguments filed 12/29/15 have been fully considered but they are not persuasive. Applicant argues that the new limitations to independent claims 1, 10 and 17 overcome the section 102(b) rejections previously set forth. See Remarks, pages 8-11. First, it should be noted that, with regard to claims 1 and 10, these limitations pertain to: (1) where the claimed fluid passage and manually operable valve “are positioned” with respect to a component (an oil bath lubrication) that is within the device (suspension fork or shock absorber) that the claimed air bleed system or fluid equalization system is intended to be used for; (2) where the claimed fluid passage and manually operable valve “are positioned” with respect to another component (a lower leg seal) that is coupled to that device which the claimed bleed system is intended to be used for; and (3) how that component acts within that intended device under certain “excessive” pressure conditions. Thus, these limitations do not concern specific structural limitations of the actual claimed systems of claims 1 and 10, but instead discuss various restrictions on the device it is intended to be used in. Applicant should consider altering the preamble to overcome this problem.

Second, Galasso still properly discloses all claimed limitations. Applicant argues that the Galasso valve bleed port 224 is positioned "above" the seal, whereas the claims require the valve to be located below the lower leg seal. See Remarks, pages

12-13. In response, the terms "below" and "lower" are relative terms, which are ultimately meaningless unless a frame of perspective is claimed. In other words, a component that is "upper" may be construed as "lower" simply by inverting the Figure. Additional claim language is necessary to preclude such permissibly broad interpretations. In addition, claim 17 recites that the upper fork moves telescopically within the lower fork, which would mean that the lower fork may be tube 210 and upper fork may be 220, since 220 most telescopically within 210. See Fig. 2.

For the foregoing reasons, all pending claims remain rejected as detailed above.

Conclusion

THIS ACTION IS MADE FINAL. Applicant is reminded of the extension of time policy as set forth in 37 CFR 1.136(a).

A shortened statutory period for reply to this final action is set to expire THREE MONTHS from the mailing date of this action. In the event a first reply is filed within TWO MONTHS of the mailing date of this final action and the advisory action is not mailed until after the end of the THREE-MONTH shortened statutory period, then the shortened statutory period will expire on the date the advisory action is mailed, and any extension fee pursuant to 37 CFR 1.136(a) will be calculated from the mailing date of the advisory action. In no event, however, will the statutory period for reply expire later than SIX MONTHS from the mailing date of this final action.

Any inquiry concerning this communication or earlier communications from the examiner should be directed to VISHAL SAHNI whose telephone number is (571)270-3838. The examiner can normally be reached on Monday - Friday 8:30-5.

If attempts to reach the examiner by telephone are unsuccessful, the examiner's supervisor, Robert Siconolfi can be reached on (571) 272-7124. The fax phone number for the organization where this application or proceeding is assigned is 571-273-8300.

Information regarding the status of an application may be obtained from the Patent Application Information Retrieval (PAIR) system. Status information for published applications may be obtained from either Private PAIR or Public PAIR. Status information for unpublished applications is available through Private PAIR only. For more information about the PAIR system, see http://pair-direct.uspto.gov. Should you have questions on access to the Private PAIR system, contact the Electronic Business Center (EBC) at 866-217-9197 (toll-free). If you would like assistance from a USPTO Customer Service Representative or access to the automated information system, call 800-786-9199 (IN USA OR CANADA) or 571-272-1000.

/VISHAL SAHNI/
Primary Examiner, Art Unit 3657
February 24, 2015

PTO/SB/08a (01-10)
Approved for use through 07/31/2012. OMB 0651-0031
U.S. Patent and Trademark Office; U.S. DEPARTMENT OF COMMERCE

Under the Paperwork Reduction Act of 1995, no persons are required to respond to a collection of information unless it contains a valid OMB control number.

INFORMATION DISCLOSURE STATEMENT BY APPLICANT

(Not for submission under 37 CFR 1.99)

Application Number	14822859
Filing Date	2015-08-10
First Named Inventor	BECKER
Art Unit	3657
Examiner Name	Vishal R. SAHNI
Attorney Docket Number	FOX-P5-08-12-US.CON

U.S.PATENTS Remove

Examiner Initial*	Cite No	Patent Number	Kind Code[1]	Issue Date	Name of Patentee or Applicant of cited Document	Pages,Columns,Lines where Relevant Passages or Relevant Figures Appear
	1	5503258	A	1996-04-02	CLARKE, et al.	
	2	5697477	A	1997-12-16	HIRAMOTO;, et al.	
	3	5816281	A	1998-10-06	MIXON;	
	4	5853071	A	1998-12-29	ROBINSON;	
	5	6592136		2003-07-15	BECKER, et al.	
	6	7255210	B2	2007-08-14	LARSSON, et al.	
	7	8480064	B2	2013-07-09	TALAVASEK	
	8	9103400		2015-08-11	BECKER	

If you wish to add additional U.S. Patent citation information please click the Add button. Add

ALL REFERENCES CONSIDERED EXCEPT WHERE LINED THROUGH. /V.R.S/

INFORMATION DISCLOSURE STATEMENT BY APPLICANT

(Not for submission under 37 CFR 1.99)

Application Number	14822859
Filing Date	2015-08-10
First Named Inventor	BECKER
Art Unit	3657
Examiner Name	Vishal R. SAHNI
Attorney Docket Number	FOX-P5-08-12-US.CON

U.S.PATENT APPLICATION PUBLICATIONS Remove

Examiner Initial*	Cite No	Publication Number	Kind Code[1]	Publication Date	Name of Patentee or Applicant of cited Document	Pages,Columns,Lines where Relevant Passages or Relevant Figures Appear
	1	20030001358	A1	2003-01-02	BECKER, et al.	
	2	20060289258	A1	2006-12-28	FOX	
	3	20100186836	A1	2010-07-29	YOSHIHIRO, et al.	
	4	20120007327	A1	2012-01-12	TALAVASEK	
	5	20120080279	A1	2012-04-05	GALASSO, et al.	
	6	20130319805	A1	2013-12-05	BECKER, et al.	

If you wish to add additional U.S. Published Application citation information please click the Add button. Add

FOREIGN PATENT DOCUMENTS Remove

Examiner Initial*	Cite No	Foreign Document Number[3]	Country Code[2] ¡	Kind Code[4]	Publication Date	Name of Patentee or Applicant of cited Document	Pages,Columns,Lines where Relevant Passages or Relevant Figures Appear	T[5]
	1							

If you wish to add additional Foreign Patent Document citation information please click the Add button Add

NON-PATENT LITERATURE DOCUMENTS Remove

EFS Web 2.1.17

ALL REFERENCES CONSIDERED EXCEPT WHERE LINED THROUGH. /V.R.S/

INFORMATION DISCLOSURE STATEMENT BY APPLICANT

(Not for submission under 37 CFR 1.99)

Application Number	14822859
Filing Date	2015-08-10
First Named Inventor	BECKER
Art Unit	3657
Examiner Name	Vishal R. SAHNI
Attorney Docket Number	FOX-P5-08-12-US.CON

Examiner Initials*	Cite No	Include name of the author (in CAPITAL LETTERS), title of the article (when appropriate), title of the item (book, magazine, journal, serial, symposium, catalog, etc), date, pages(s), volume-issue number(s), publisher, city and/or country where published.	T[5]
	1		

If you wish to add additional non-patent literature document citation information please click the Add button Add

EXAMINER SIGNATURE

Examiner Signature	/VISHAL R SAHNI/	Date Considered	02/17/2016

*EXAMINER: Initial if reference considered, whether or not citation is in conformance with MPEP 609. Draw line through a citation if not in conformance and not considered. Include copy of this form with next communication to applicant.

[1] See Kind Codes of USPTO Patent Documents at www.USPTO.GOV or MPEP 901.04. [2] Enter office that issued the document, by the two-letter code (WIPO Standard ST.3). [3] For Japanese patent documents, the indication of the year of the reign of the Emperor must precede the serial number of the patent document. [4] Kind of document by the appropriate symbols as indicated on the document under WIPO Standard ST.16 if possible. [5] Applicant is to place a check mark here if English language translation is attached.

ALL REFERENCES CONSIDERED EXCEPT WHERE LINED THROUGH. /V.R.S/

INFORMATION DISCLOSURE STATEMENT BY APPLICANT

(Not for submission under 37 CFR 1.99)

Application Number	14822859
Filing Date	2015-08-10
First Named Inventor	BECKER
Art Unit	3657
Examiner Name	Vishal R. SAHNI
Attorney Docket Number	FOX-P5-08-12-US.CON

CERTIFICATION STATEMENT

Please see 37 CFR 1.97 and 1.98 to make the appropriate selection(s):

That each item of information contained in the information disclosure statement was first cited in any communication from a foreign patent office in a counterpart foreign application not more than three months prior to the filing of the information disclosure statement. See 37 CFR 1.97(e)(1).

OR

☐ That no item of information contained in the information disclosure statement was cited in a communication from a foreign patent office in a counterpart foreign application, and, to the knowledge of the person signing the certification after making reasonable inquiry, no item of information contained in the information disclosure statement was known to any individual designated in 37 CFR 1.56(c) more than three months prior to the filing of the information disclosure statement. See 37 CFR 1.97(e)(2).

See attached certification statement.

X The fee set forth in 37 CFR 1.17 (p) has been submitted herewith.

A certification statement is not submitted herewith.

SIGNATURE

A signature of the applicant or representative is required in accordance with CFR 1.33, 10.18. Please see CFR 1.4(d) for the form of the signature.

Signature	/John P. Wagner, Jr./	Date (YYYY-MM-DD)	2015-12-29
Name/Print	John P. Wagner, Jr.	Registration Number	35,398

This collection of information is required by 37 CFR 1.97 and 1.98. The information is required to obtain or retain a benefit by the public which is to file (and by the USPTO to process) an application. Confidentiality is governed by 35 U.S.C. 122 and 37 CFR 1.14. This collection is estimated to take 1 hour to complete, including gathering, preparing and submitting the completed application form to the USPTO. Time will vary depending upon the individual case. Any comments on the amount of time you require to complete this form and/or suggestions for reducing this burden, should be sent to the Chief Information Officer, U.S. Patent and Trademark Office, U.S. Department of Commerce, P.O. Box 1450, Alexandria, VA 22313-1450. DO NOT SEND FEES OR COMPLETED FORMS TO THIS ADDRESS. **SEND TO: Commissioner for Patents, P.O. Box 1450, Alexandria, VA 22313-1450.**

ALL REFERENCES CONSIDERED EXCEPT WHERE LINED THROUGH. /V.R.S/

Privacy Act Statement

The Privacy Act of 1974 (P.L. 93-579) requires that you be given certain information in connection with your submission of the attached form related to a patent application or patent. Accordingly, pursuant to the requirements of the Act, please be advised that: (1) the general authority for the collection of this information is 35 U.S.C. 2(b)(2); (2) furnishing of the information solicited is voluntary; and (3) the principal purpose for which the information is used by the U.S. Patent and Trademark Office is to process and/or examine your submission related to a patent application or patent. If you do not furnish the requested information, the U.S. Patent and Trademark Office may not be able to process and/or examine your submission, which may result in termination of proceedings or abandonment of the application or expiration of the patent.

The information provided by you in this form will be subject to the following routine uses:

1. The information on this form will be treated confidentially to the extent allowed under the Freedom of Information Act (5 U.S.C. 552) and the Privacy Act (5 U.S.C. 552a). Records from this system of records may be disclosed to the Department of Justice to determine whether the Freedom of Information Act requires disclosure of these record s.

2. A record from this system of records may be disclosed, as a routine use, in the course of presenting evidence to a court, magistrate, or administrative tribunal, including disclosures to opposing counsel in the course of settlement negotiations.

3. A record in this system of records may be disclosed, as a routine use, to a Member of Congress submitting a request involving an individual, to whom the record pertains, when the individual has requested assistance from the Member with respect to the subject matter of the record.

4. A record in this system of records may be disclosed, as a routine use, to a contractor of the Agency having need for the information in order to perform a contract. Recipients of information shall be required to comply with the requirements of the Privacy Act of 1974, as amended, pursuant to 5 U.S.C. 552a(m).

5. A record related to an International Application filed under the Patent Cooperation Treaty in this system of records may be disclosed, as a routine use, to the International Bureau of the World Intellectual Property Organization, pursuant to the Patent Cooperation Treaty.

6. A record in this system of records may be disclosed, as a routine use, to another federal agency for purposes of National Security review (35 U.S.C. 181) and for review pursuant to the Atomic Energy Act (42 U.S.C. 218(c)).

7. A record from this system of records may be disclosed, as a routine use, to the Administrator, General Services, or his/her designee, during an inspection of records conducted by GSA as part of that agency's responsibility to recommend improvements in records management practices and programs, under authority of 44 U.S.C. 2904 and 2906. Such disclosure shall be made in accordance with the GSA regulations governing inspection of records for this purpose, and any other relevant (i.e., GSA or Commerce) directive. Such disclosure shall not be used to make determinations about individuals.

8. A record from this system of records may be disclosed, as a routine use, to the public after either publication of the application pursuant to 35 U.S.C. 122(b) or issuance of a patent pursuant to 35 U.S.C. 151. Further, a record may be disclosed, subject to the limitations of 37 CFR 1.14, as a routine use, to the public if the record was filed in an application which became abandoned or in which the proceedings were terminated and which application is referenced by either a published application, an application open to public inspections or an issued patent.

9. A record from this system of records may be disclosed, as a routine use, to a Federal, State, or local law enforcement agency, if the USPTO becomes aware of a violation or potential violation of law or regulation.

Index of Claims	Application/Control No.	Applicant(s)/Patent Under Reexamination
	14822859	BECKER, WILLIAM M.
	Examiner	**Art Unit**
	VISHAL SAHNI	3657

✓	Rejected	-	Cancelled	N	Non-Elected	A	Appeal
=	Allowed	÷	Restricted	I	Interference	O	Objected

☐ Claims renumbered in the same order as presented by applicant ☐ CPA ☐ T.D. ☐ R.1.47

CLAIM		DATE								
Final	Original	09/28/2015	02/17/2016							
	1	✓	✓							
	2		✓							
	3		✓							
	4		✓							
	5		✓							
	6		✓							
	7		✓							
	8		✓							
	9		✓							
	10		✓							
	11		✓							
	12		✓							
	13		✓							
	14		✓							
	15		✓							
	16		✓							
	17		✓							

To: patents@wagnerblecher.com,,
From: PAIR_eOfficeAction@uspto.gov
Cc: PAIR_eOfficeAction@uspto.gov
Subject: Private PAIR Correspondence Notification for Customer Number 70408

Feb 23, 2016 05:39:14 AM

Dear PAIR Customer:

FOX C/O WAGNER BLECHER LLP
123 WESTRIDGE DRIVE
WATSONVILLE, CA 95076
UNITED STATES

The following USPTO patent application(s) associated with your Customer Number, 70408 , have new outgoing correspondence. This correspondence is now available for viewing in Private PAIR.

The official date of notification of the outgoing correspondence will be indicated on the form PTOL-90 accompanying the correspondence.

Disclaimer:
The list of documents shown below is provided as a courtesy and is not part of the official file wrapper. The content of the images shown in PAIR is the official record.

Application	Document	Mailroom Date	Attorney Docket No.
14822859	CTFR	02/23/2016	FOX-P5-08-12-US.CON
	1449	02/23/2016	FOX-P5-08-12-US.CON

To view your correspondence online or update your email addresses, please visit us anytime at https://sportal.uspto.gov/secure/myportal/privatepair.

If you have any questions, please email the Electronic Business Center (EBC) at EBC@uspto.gov with 'e-Office Action' on the subject line or call 1-866-217-9197 during the following hours:

Monday - Friday 6:00 a.m. to 12:00 a.m.

Thank you for prompt attention to this notice,

UNITED STATES PATENT AND TRADEMARK OFFICE

PATENT APPLICATION INFORMATION RETRIEVAL SYSTEM

IN THE UNITED STATES PATENT AND TRADEMARK OFFICE

In re Application of:	William M. Becker	)	
		)	Examiner: Sahni, V.
Application No.:	14/822,859	)	
		)	Art Unit: 3657
Filed: 08/10/2015		)	
		)	Conf. No.: 6345
For:	METHOD AND APPARATUS FOR AN ADJUSTABLE DAMPER	)	

Commissioner for Patents
P.O. Box RCE
Alexandria, VA 22313-1450

PRELIMINARY AMENDMENT AND RESPONSE ACCOMPANYING THE PRESENT REQUEST FOR CONTINUING EXAMINATION (RCE)

Sir:

In response to the Final Office Action (OA) with a notification data of February 23, 2016, in conjunction with the RCE filed herewith, Applicants respectfully request the Examiner to enter the following amendments and consider the following remarks.

CLAIMS

1. (Currently Amended) An air bleed system for a lower fork of a suspension fork or shock absorber comprising:

a fluid passage between an interior of the lower fork and an exterior of the lower fork; and

a manually operable valve located in the lower fork, said manually operable valve having a first position substantially closing said fluid passage and a second position allowing a fluid to flow between said interior and said exterior, wherein said fluid passage and said manually operable valve are ~~positioned~~ located at a distance from an oil bath lubrication within said lower fork ~~suspension fork or shock absorber~~, such that when said manually operable valve is in said second position, ~~a substantial portion~~ most, if not all of said oil bath lubrication remains within said lower fork ~~suspension fork or shock absorber~~ and such that when ~~excessive~~ trapped air pressure inside said lower fork ~~suspension fork or shock absorber~~, that is higher than a local ambient air pressure outside of said suspension fork or shock absorber, is relieved ~~at high elevation, said substantial portion~~ most, if not all of said oil bath lubrication that is ~~leveled~~ within said lower fork remains within said lower fork.

2. (Previously Presented) The air bleed system of claim 1, wherein said suspension fork or shock absorber comprises:

a damper.

3. (Previously Presented) The air bleed system of claim 1, wherein said fluid comprises:

a gas.

4. (Currently Amended) The air bleed system of claim 1, further comprising:

a valve activator coupled with said manually operable valve, said valve activator comprising:

an activation position ~~configured for, upon activation, positioning~~ placing said manually operable valve into said first position; and

a deactivation position ~~configured for, upon deactivation, positioning~~ placing said manually operable valve into said second position, and whereupon when in said activation position, the trapped air pressure in said ~~suspension~~ lower fork is equalized with the local ambient air pressure.

5. (Currently Amended) The air bleed system of claim 4, wherein said valve activator comprises:

a button ~~configured for being pressed for~~ to select said activation position and said deactivation position.

6. (Currently Amended) The air bleed system of claim 4, wherein said valve activator is ~~positioned~~ located on a die-cast feature of said suspension fork or shock absorber.

7. (Currently Amended) The air bleed system of claim 6, further comprising:

a diametrical recess; and

a sealing o-ring comprising:

a sealed position; and

an unsealed position, wherein said sealed position seals between said die-cast feature and said ~~suspension~~ lower fork, whereupon when said valve activator is moved from said activation position to said deactivation position, said sealing o-ring moves into said diametrical recess, thereby attaining said unsealed position and letting air pressure by-pass into or out of said ~~suspension~~ lower fork via a vent hole.

8. (Currently Amended) The air bleed system of claim 4, wherein said manually operable valve comprises:

a spring coupled with said valve activator, whereupon when said valve activator is moved into said deactivation position, said spring biases said valve activator toward said first position.

9. (Currently Amended) The air bleed system of claim 8, wherein said second position comprises:

a sealing engagement between said sealing o-ring and a seal bore, wherein when in said sealing engagement, said trapped air pressure does not by-pass into or out of said ~~suspension~~ lower fork.

10. (Currently Amended) A fluid equalization system for a lower fork of a suspension fork or shock absorber comprising:

a fluid flow path between a first region of said lower fork of said suspension fork or shock absorber having a first pressure and a second region having a second pressure; and

a valve member located in said lower fork of said suspension fork or said shock absorber, said valve member having a first position substantially obstructing said fluid flow path and a second position for which said fluid flow path is open, wherein said fluid flow path and said valve member are ~~positioned~~ located at a distance from an oil bath lubrication within said lower fork ~~suspension fork or shock absorber~~, such that when said valve member is in said second position, ~~a substantial portion~~ most, if not all of said oil bath lubrication remains within said lower fork ~~suspension fork or shock absorber~~ and such that when ~~excessive~~ trapped air pressure inside said lower fork ~~suspension fork or shock absorber~~, that is higher than a local ambient air pressure outside of said suspension fork or shock absorber, is relieved ~~at high elevation, said substantial portion~~ most, if not all of said oil bath lubrication that is ~~leveled~~ within said lower fork remains within said lower fork.

11. (Previously Presented) The fluid equalization system of claim 10, wherein said first region of said suspension fork or shock absorber having said first pressure is one of an interior of said suspension fork or shock absorber and an exterior of said suspension fork or shock absorber.

12. (Previously Presented) The fluid equalization system of claim 10, wherein said second region having said second pressure is one of an interior of said suspension fork or shock absorber and an exterior of said suspension fork or shock absorber.

13. (Previously Presented) The fluid equalization system of claim 10, wherein said first position comprises:

a sealing o-ring partially enclosed by a valve activator; and

a spring, said sealing o-ring comprising:

a sealed position, wherein when in said sealed position, said spring biases said valve activator toward a closed position and said sealing o-ring presses against a sealing bore such that air pressure does not pass into or out of said suspension fork or shock absorber.

14. (Currently Amended) The fluid equalization system of claim 13, wherein said valve activator comprises:

a button ~~configured for being pressed~~ for activation or deactivation.

15. (Currently Amended) The fluid equalization system of claim 13 [[10]], wherein said valve activator is ~~positioned~~ located on a die-cast feature of said suspension fork or shock absorber.

16. (Previously Presented) The fluid equalization system of claim 10, wherein said second position comprises:

a diametrical recess;

a sealing o-ring partially enclosed by a valve activator; and

a spring, said sealing o-ring comprising:

an unsealed position, wherein when in said unsealed position, said sealing o-ring moves into said diametrical recess, thereby letting air pressure by-pass into or out of said suspension fork or shock absorber.

17. (Canceled)

18. (New) An air bleed system for a lower fork of a suspension fork or shock absorber comprising:

a fluid passage between an interior of the lower fork and an exterior of the lower fork; and

a manually operable valve located in the lower fork, said manually operable valve having a first position substantially closing said fluid passage and a second position allowing a fluid to flow between said interior and said exterior of the lower fork.

19. (New) The air bleed system of claim 18, wherein said manually operable valve is located proximate to an upper end of the lower fork.

REMARKS

Claim 17 is canceled. Claims 1-16 and 18-19 are pending. Claims 1, 4-10, and 14-15 are amended herein. Claims 18-19 are new. No new matter is added as a result of the amendments. Support for the Claim amendments can be found at least at paragraphs [0021] and [0023].

Claim Rejections - 35 U.S.C. §112

The present office action asserts "Claims 1-17 are rejected under 35 U.S.C. 112(b)..., second paragraph as being indefinite for failing to particularly point out and distinctly claim the subject matter which the inventor or a joint inventor,... regards as the invention."

Claim 17 is canceled. As such, the rejection of Claim 17 is moot.

Applicant has amended independent Claims 1 and 10 herein to overcome the rejections under 35 U.S.C. 112(b). As such, Applicants submit the rejection of Claims 1-16 under 35 U.S.C. 112(b), second paragraph, is moot.

35 U.S.C. §102(a) Rejections

The instant Office Action suggests that Claims 1-6, 8-15 and 17 are rejected under 35 U.S.C. §102(a) as being anticipated by Galasso et al. (US 2012/0080279) (hereinafter, "Galasso"). Applicants respectfully traverse the rejection for the following rationale.

Claim 17 is canceled. As such, the rejection of Claim 17 is moot.

Applicant respectfully points out that amended Claim 1 (and similarly Claims 10 and 18) recites (emphasis added as to relevant amended language):

> An air bleed system for a lower fork of a suspension fork or shock absorber comprising:
>
> a fluid passage between an interior of the suspension lower fork and an exterior of the lower fork suspension; and
>
> a manually operable valve located in lower fork, said manually operable valve having a first position substantially closing said fluid passage and a second position allowing a fluid to flow between said interior and said exterior, wherein said fluid passage and said manually operable valve are located at a distance from an oil bath lubrication within said lower fork, such that when said manually operable valve is in said second position, most, if not all of said oil bath lubrication remains within said lower fork and such that when trapped air pressure inside said lower fork, that is higher than a local ambient air pressure outside of said suspension fork or shock absorber, is relieved most, if not all of said oil bath lubrication that is within said lower fork remains within said lower fork.

MPEP §2131 provides:

> "A claim is anticipated only if each and every element as set forth in the claim is found, either expressly or inherently described, in a single prior art reference". MPEP §2131; *Verdegaal Bros. v. Union Oil Co. of California*, 814 F.2d 628, 631, 2 USPQ2d 1051, 103 (Fed. Cir. 1987). … "The identical invention must be shown in as complete detail as is contained in the … claim." *Richardson v. Suzuki Motor Co.*, 868 F.2d 1226, 1236, 9 USPQ2d 1913, 1920 (Fed. Cir. 1989). "The elements must be arranged as required by the claim…" *In re Bond*, 910 F.2d 831, 15 USPQ2d 1913, 1920 (Fed. Cir. 1989).

Applicant understands Galasso to disclose "METHODS AND APPARATUS FOR SAG ADJUSTMENT" (Galasso, Title) in which an "integrated damper/gas spring shock absorber includes a bleed port located at a position on a gas spring cylinder corresponding to a desired sag setting" (Galasso, Abstract). Galasso provides techniques for easily adjusting an amount of preload applied to a spring in a shock absorber. (Galasso, paragraph [0007].)

However, Applicants do not understand Galasso to anticipate the features of amended independent Claims 1, 10 and 18. e.g., "a manually operable valve located in lower fork, said

manually operable valve having a first position substantially closing said fluid passage and a second position allowing a fluid to flow between said interior and said exterior, wherein said fluid passage and said manually operable valve are located at a distance from an oil bath lubrication within said lower fork, such that when said manually operable valve is in said second position, most, if not all of said oil bath lubrication remains within said lower fork and such that when trapped air pressure inside said lower fork, that is higher than a local ambient air pressure outside of said suspension fork or shock absorber, is relieved most, if not all of said oil bath lubrication that is within said lower fork remains within said lower fork."

Therefore, Applicant respectfully submit that since Galasso does not anticipate the features as set forth in independent Claims 1, 10 and 18; Claims 1, 10 and 18 traverse the rejection under 35 U.S.C. §102(a) and are in condition for allowance.

Accordingly, Applicant respectfully submits that Claims 2-9 and 11-15 are also in condition for allowance as pending from allowable base Claims 1 and 10 and reciting additional features thereof.

Claim Rejections - 35 U.S.C. §103(a)

The instant Office Action argues that Claims 7 and 16 are rejected under 35 U.S.C. § 103(a) as being rendered obvious over Galasso in view of Hiramoto et al. (5,697,477), hereinafter "Hiramoto".

For the reasons provided supra, Applicant respectfully submits that Claims 1 and 10 are in condition for allowance. Moreover, the addition of the Hiramoto reference does not teach or render obvious the features of Claims 1 and 10, e.g., "a manually operable valve located in lower fork, said manually operable valve having a first position substantially closing said fluid passage and a second position allowing a fluid to flow between said interior and said exterior, wherein said fluid passage and said manually operable valve are located at a distance from an oil bath lubrication within said lower fork, such that when said manually operable valve is in said second position, most, if not all of said oil bath lubrication remains within said lower fork and such that when trapped air pressure inside said lower fork, that is higher than a local ambient air pressure outside of said suspension fork or shock absorber, is relieved most, if not all of said oil bath lubrication that is within said lower fork remains within said lower fork."

Therefore, Applicant respectfully submit Claims 1 and 10 traverse the rejection under 35 U.S.C. §103(a) and are in condition for allowance. Accordingly, Applicant respectfully submits that Claims 7 and 16 are also in condition for allowance as pending from allowable base Claims 1 and 10 and reciting additional features thereof.

New Claims

Claim 19 depends from claim 18 which is patentable for the reasons provided herein. Therefore, this new claim 19 is patentable over the applied references, whether taken alone or in any reasonable combination, for at least the reasons set forth above with respect to claim 18.

CONCLUSION

In light of the above-listed remarks and amendments, Applicant respectfully requests allowance of the Claims 1-16 and 18-19.

The Examiner is invited to contact Applicant's undersigned representative if the Examiner believes such action would expedite resolution of the present Application.

In the event this paper is not timely filed, Applicant petitions for an appropriate extension of time. Please charge any fee deficiencies or credit any overpayments to Deposit Account No. 50-4157 with reference to our Docket No. FOX-P5-08-12-US.CON.

Respectfully submitted,

Wagner Blecher LLP

Date: 7/25/2016

/John P. Wagner, Jr./

John P. Wagner, Jr.
Reg. No. 35,398

WESTRIDGE BUSINESS PARK
123 WESTRIDGE DRIVE
WATSONVILLE, CALIFORNIA 95076
(408) 377-0500

Electronic Patent Application Fee Transmittal

Application Number:	14822859
Filing Date:	10-Aug-2015
Title of Invention:	METHOD AND APPARATUS FOR AN ADJUSTABLE DAMPER
First Named Inventor/Applicant Name:	William M. Becker
Filer:	John Paul Wagner Jr./Robert Condon
Attorney Docket Number:	FOX-P5-08-12-US.CON

Filed as Large Entity

Filing Fees for Utility under 35 USC 111(a)

Description	Fee Code	Quantity	Amount	Sub-Total in USD($)
Basic Filing:				
Pages:				
Claims:				
Miscellaneous-Filing:				
Petition:				
Patent-Appeals-and-Interference:				
Post-Allowance-and-Post-Issuance:				
Extension-of-Time:				

Description	Fee Code	Quantity	Amount	Sub-Total in USD($)
Extension - 2 months with $0 paid	1252	1	600	600
Miscellaneous:				
Request for Continued Examination	1801	1	1200	1200
		Total in USD ($)		**1800**

Electronic Acknowledgement Receipt	
EFS ID:	26448659
Application Number:	14822859
International Application Number:	
Confirmation Number:	6345
Title of Invention:	METHOD AND APPARATUS FOR AN ADJUSTABLE DAMPER
First Named Inventor/Applicant Name:	William M. Becker
Customer Number:	70408
Filer:	John Paul Wagner Jr./Robert Condon
Filer Authorized By:	John Paul Wagner Jr.
Attorney Docket Number:	FOX-P5-08-12-US.CON
Receipt Date:	25-JUL-2016
Filing Date:	10-AUG-2015
Time Stamp:	17:17:48
Application Type:	Utility under 35 USC 111(a)

Payment information:

Submitted with Payment	yes
Payment Type	Deposit Account
Payment was successfully received in RAM	$1800
RAM confirmation Number	6870
Deposit Account	504157
Authorized User	Condon, Robert
The Director of the USPTO is hereby authorized to charge indicated fees and credit any overpayment as follows: Charge any Additional Fees required under 37 CFR 1.16 (National application filing, search, and examination fees) Charge any Additional Fees required under 37 CFR 1.17 (Patent application and reexamination processing fees)	

Charge any Additional Fees required under 37 CFR 1.19 (Document supply fees)

Charge any Additional Fees required under 37 CFR 1.20 (Post Issuance fees)

Charge any Additional Fees required under 37 CFR 1.21 (Miscellaneous fees and charges)

File Listing:

Document Number	Document Description	File Name	File Size(Bytes)/ Message Digest	Multi Part /.zip	Pages (if appl.)
1		FOX-P5-08-12-USCON_20160725_RCE.pdf	204555 be9d74e85d38e6cc0532ca2c5ddb0cc14542e29f	yes	14

Multipart Description/PDF files in .zip description		
Document Description	**Start**	**End**
Transmittal Letter	1	2
Request for Continued Examination (RCE)	3	3
Claims	4	9
Applicant Arguments/Remarks Made in an Amendment	10	14

Warnings:

Information:

2	Fee Worksheet (SB06)	fee-info.pdf	32842 4c24391a9b850ad0f7fcbb69dae6518f461512a1	no	2

Warnings:

Information:

Total Files Size (in bytes):	237397

This Acknowledgement Receipt evidences receipt on the noted date by the USPTO of the indicated documents, characterized by the applicant, and including page counts, where applicable. It serves as evidence of receipt similar to a Post Card, as described in MPEP 503.

New Applications Under 35 U.S.C. 111
If a new application is being filed and the application includes the necessary components for a filing date (see 37 CFR 1.53(b)-(d) and MPEP 506), a Filing Receipt (37 CFR 1.54) will be issued in due course and the date shown on this Acknowledgement Receipt will establish the filing date of the application.

National Stage of an International Application under 35 U.S.C. 371
If a timely submission to enter the national stage of an international application is compliant with the conditions of 35 U.S.C. 371 and other applicable requirements a Form PCT/DO/EO/903 indicating acceptance of the application as a national stage submission under 35 U.S.C. 371 will be issued in addition to the Filing Receipt, in due course.

New International Application Filed with the USPTO as a Receiving Office
If a new international application is being filed and the international application includes the necessary components for an international filing date (see PCT Article 11 and MPEP 1810), a Notification of the International Application Number and of the International Filing Date (Form PCT/RO/105) will be issued in due course, subject to prescriptions concerning national security, and the date shown on this Acknowledgement Receipt will establish the international filing date of the application.

WAGNER BLECHER LLP
123 Westridge Drive
Watsonville, CA 95076

PATENT APPLICATION

ATTORNEY DOCKET NO. FOX-P5-08-12-US.CON

IN THE UNITED STATES PATENT AND TRADEMARK OFFICE

Inventor(s): William BECKER

Confirmation No.: 6345

Application No.: 14/822,859

Examiner: Vishal R. SAHNI

Filing Date: August 10, 2015

Group Art Unit: 3657

Title: METHOD AND APPARATUS FOR AN ADJUSTABLE DAMPER

Mail Stop RCE
Commissioner For Patents
PO Box 1450
Alexandria, VA 22313-1450

REQUEST FOR CONTINUED EXAMINATION (RCE) 37 CFR 1.114

Subsection (b) of 35 U.S.C. 132, effective on May 29, 2000, provides for continued examination of a utility or plant application filed on or after June 8, 1995.
See The American Inventors Protection Act of 1999 (AIPA).

This is a Request for Continued Examination (RCE) under CFR 1.114 of the above-identified application.

NOTE: 37 CFR 1.114 is effective on May 20, 2000. If the above- application was filed prior to May 29, 2000, applicant may wish to consider filing a continued prosecution application (CPA) under CFR 1.53(d) (PTO/SB/29) instead of a RCE to be eligible for the patent term adjustment provisions of the AIPA. See Changes to Application Examination and Provisional Application Practice, Interim Rule, 65 Fed. Reg. 14865 (Mar. 20, 2000), 1233 off. Gaz. Pat. Office

Submission Required under 37 CFR 1.114

☐ Previously submitted

- ☐ Consider the amendment(s)/reply under 37 CFR 1.116 previously filed on _____ .
  (Any unentered amendment(s) referred to above will be entered).
- ☐ Consider the arguments in the Appeal Brief or Reply Brief prevously filed on _____ .
- ☐ Other _____

☒ Enclosed

- ☒ Amendment/Reply
- ☐ Affidavit(s)/Declaration(s)
- ☐ Information Disclosure Statement (IDS)
- ☐ Other _____

Miscellaneous

☐ Suspension of action is requested under 37 CFR 1.103(c) for a period of _____ months.
The fee for this Suspension is (37 CFR 1.17(i)) $130.00

☐ Other _____

CONTINUED EXAMINATION TRANSMITTAL (RCE) (37 CFR 1.114) (continued)

PATENT APPLICATION

ATTORNEY DOCKET NO. FOX-P5-08-12-US.CON

Fees

☒ RCE filing fee first request $1,200 ☐ RCE filing fee after first request $1,700

☐ A Petition for Extension of Time

☐ 1st Month $200 ☒ 2nd Month $600 ☐ 3rd Month $1,400 ☐ 4th Month $2,200

Discounted Fees

☐ Applicant asserts small entity status.
Therefore the fees shown above are reduced and the resulting fee is: $ _____

☐ Applicant certifies micro entity status.
Therefore the fees shown above are reduced and the resulting fee is: $ _____

☐ Additional claim fees of $ _____

☒ Please charge Deposit Account 50-4157 the sum of $ 1,800 . At any time during the pendency of this application, please charge any fees required or credit any over payment to Deposit Account 50-4157 pursuant to 37 CFR 1.25. Additionally please charge any fees to Deposit Account 50-4157 under 37 CFR 1.16 through 1.21 inclusive, and any other sections in Title 37 of the Code of Federal Regulations that my regulate fees.

☐ A duplicate copy of this transmittal letter is enclosed.

☐ I hereby certify that this correspondence is being deposited with the United States Postal Service as first class mail in an envelope addressed to: Commissioner for Patents, Alexandria, VA 22313-1450

Date of Deposit:

OR

☒ I hereby certify that this paper is being transmitted to the Patent and Trademark Office facsimile number (571) 273-8300 or via electronic filing.
Date of facsimile/transmission: 07/25/2016

Typed Name: Robert Condon

Signature: /Robert Condon/

Respectfully submitted,
Fox Factory, Inc.

By /John P. Wagner, Jr./
John P. Wagner, Jr.

Attorney/Agent for Applicant(s)

Reg No. : 35,398

Date : 07/25/2016

Telephone : 408-377-0500

PTO/SB/06 (09-11)
Approved for use through 1/31/2014. OMB 0651-0032
U.S. Patent and Trademark Office; U.S. DEPARTMENT OF COMMERCE
Under the Paperwork Reduction Act of 1995, no persons are required to respond to a collection of information unless it displays a valid OMB control number.

PATENT APPLICATION FEE DETERMINATION RECORD Substitute for Form PTO-875	Application or Docket Number 14/822,859	Filing Date 08/10/2015	☐ To be Mailed

ENTITY: ☒ LARGE ☐ SMALL ☐ MICRO

APPLICATION AS FILED – PART I

FOR	(Column 1) NUMBER FILED	(Column 2) NUMBER EXTRA	RATE ($)	FEE ($)
☐ BASIC FEE (37 CFR 1.16(a), (b), or (c))	N/A	N/A	N/A	
☐ SEARCH FEE (37 CFR 1.16(k), (i), or (m))	N/A	N/A	N/A	
☐ EXAMINATION FEE (37 CFR 1.16(o), (p), or (q))	N/A	N/A	N/A	
TOTAL CLAIMS (37 CFR 1.16(i))	minus 20 =	*	X $ =	
INDEPENDENT CLAIMS (37 CFR 1.16(h))	minus 3 =	*	X $ =	
☐ APPLICATION SIZE FEE (37 CFR 1.16(s))	If the specification and drawings exceed 100 sheets of paper, the application size fee due is $310 ($155 for small entity) for each additional 50 sheets or fraction thereof. See 35 U.S.C. 41(a)(1)(G) and 37 CFR 1.16(s).			
☐ MULTIPLE DEPENDENT CLAIM PRESENT (37 CFR 1.16(j))				
* If the difference in column 1 is less than zero, enter "0" in column 2.			TOTAL	

APPLICATION AS AMENDED – PART II

AMENDMENT

07/25/2016	(Column 1) CLAIMS REMAINING AFTER AMENDMENT		(Column 2) HIGHEST NUMBER PREVIOUSLY PAID FOR	(Column 3) PRESENT EXTRA	RATE ($)	ADDITIONAL FEE ($)
Total (37 CFR 1.16(i))	* 18	Minus	** 20	= 0	X $80 =	0
Independent (37 CFR 1.16(h))	* 3	Minus	***3	= 0	X $420 =	0
☐ Application Size Fee (37 CFR 1.16(s))						
☐ FIRST PRESENTATION OF MULTIPLE DEPENDENT CLAIM (37 CFR 1.16(j))						
					TOTAL ADD'L FEE	0

AMENDMENT

	(Column 1) CLAIMS REMAINING AFTER AMENDMENT		(Column 2) HIGHEST NUMBER PREVIOUSLY PAID FOR	(Column 3) PRESENT EXTRA	RATE ($)	ADDITIONAL FEE ($)
Total (37 CFR 1.16(i))	*	Minus	**	=	X $ =	
Independent (37 CFR 1.16(h))	*	Minus	***	=	X $ =	
☐ Application Size Fee (37 CFR 1.16(s))						
☐ FIRST PRESENTATION OF MULTIPLE DEPENDENT CLAIM (37 CFR 1.16(j))						
					TOTAL ADD'L FEE	

* If the entry in column 1 is less than the entry in column 2, write "0" in column 3.
** If the "Highest Number Previously Paid For" IN THIS SPACE is less than 20, enter "20".
*** If the "Highest Number Previously Paid For" IN THIS SPACE is less than 3, enter "3".
The "Highest Number Previously Paid For" (Total or Independent) is the highest number found in the appropriate box in column 1.

LIE
DIANA BATES

This collection of information is required by 37 CFR 1.16. The information is required to obtain or retain a benefit by the public which is to file (and by the USPTO to process) an application. Confidentiality is governed by 35 U.S.C. 122 and 37 CFR 1.14. This collection is estimated to take 12 minutes to complete, including gathering, preparing, and submitting the completed application form to the USPTO. Time will vary depending upon the individual case. Any comments on the amount of time you require to complete this form and/or suggestions for reducing this burden, should be sent to the Chief Information Officer, U.S. Patent and Trademark Office, U.S. Department of Commerce, P.O. Box 1450, Alexandria, VA 22313-1450. DO NOT SEND FEES OR COMPLETED FORMS TO THIS ADDRESS. **SEND TO: Commissioner for Patents, P.O. Box 1450, Alexandria, VA 22313-1450.**
If you need assistance in completing the form, call 1-800-PTO-9199 and select option 2.

UNITED STATES PATENT AND TRADEMARK OFFICE

UNITED STATES DEPARTMENT OF COMMERCE
United States Patent and Trademark Office
Address: COMMISSIONER FOR PATENTS
P.O. Box 1450
Alexandria, Virginia 22313-1450
www.uspto.gov

APPLICATION NO.	FILING DATE	FIRST NAMED INVENTOR	ATTORNEY DOCKET NO.	CONFIRMATION NO.
14/822,859	08/10/2015	William M. Becker	FOX-P5-08-12-US.CON	6345

70408 7590 08/16/2016
FOX C/O WAGNER BLECHER LLP
123 WESTRIDGE DRIVE
WATSONVILLE, CA 95076

EXAMINER
SAHNI, VISHAL R

ART UNIT	PAPER NUMBER
3657	

NOTIFICATION DATE	DELIVERY MODE
08/16/2016	ELECTRONIC

Please find below and/or attached an Office communication concerning this application or proceeding.

The time period for reply, if any, is set in the attached communication.

Notice of the Office communication was sent electronically on above-indicated "Notification Date" to the following e-mail address(es):

patents@wagnerblecher.com

PTOL-90A (Rev. 04/07)

Office Action Summary	Application No. 14/822,859	Applicant(s) BECKER, WILLIAM M.	
	Examiner VISHAL SAHNI	Art Unit 3657	AIA (First Inventor to File) Status No

-- The MAILING DATE of this communication appears on the cover sheet with the correspondence address --

Period for Reply

A SHORTENED STATUTORY PERIOD FOR REPLY IS SET TO EXPIRE 3 MONTHS FROM THE MAILING DATE OF THIS COMMUNICATION.

- Extensions of time may be available under the provisions of 37 CFR 1.136(a). In no event, however, may a reply be timely filed after SIX (6) MONTHS from the mailing date of this communication.
- If NO period for reply is specified above, the maximum statutory period will apply and will expire SIX (6) MONTHS from the mailing date of this communication.
- Failure to reply within the set or extended period for reply will, by statute, cause the application to become ABANDONED (35 U.S.C. § 133). Any reply received by the Office later than three months after the mailing date of this communication, even if timely filed, may reduce any earned patent term adjustment. See 37 CFR 1.704(b).

Status

1)☒ Responsive to communication(s) filed on *the RCE filed 07/25/16*.

☐ A declaration(s)/affidavit(s) under **37 CFR 1.130(b)** was/were filed on _____.

2a)☐ This action is **FINAL**. 2b)☒ This action is non-final.

3)☐ An election was made by the applicant in response to a restriction requirement set forth during the interview on _____; the restriction requirement and election have been incorporated into this action.

4)☐ Since this application is in condition for allowance except for formal matters, prosecution as to the merits is closed in accordance with the practice under *Ex parte Quayle*, 1935 C.D. 11, 453 O.G. 213.

Disposition of Claims*

5)☒ Claim(s) *1-16,18 and 19* is/are pending in the application.

5a) Of the above claim(s) _____ is/are withdrawn from consideration.

6)☐ Claim(s) _____ is/are allowed.

7)☒ Claim(s) *1-16,18 and 19* is/are rejected.

8)☐ Claim(s) _____ is/are objected to.

9)☐ Claim(s) _____ are subject to restriction and/or election requirement.

* If any claims have been determined allowable, you may be eligible to benefit from the **Patent Prosecution Highway** program at a participating intellectual property office for the corresponding application. For more information, please see http://www.uspto.gov/patents/init_events/pph/index.jsp or send an inquiry to PPHfeedback@uspto.gov.

Application Papers

10)☐ The specification is objected to by the Examiner.

11)☐ The drawing(s) filed on _____ is/are: a)☐ accepted or b)☐ objected to by the Examiner.

Applicant may not request that any objection to the drawing(s) be held in abeyance. See 37 CFR 1.85(a).

Replacement drawing sheet(s) including the correction is required if the drawing(s) is objected to. See 37 CFR 1.121(d).

Priority under 35 U.S.C. § 119

12)☐ Acknowledgment is made of a claim for foreign priority under 35 U.S.C. § 119(a)-(d) or (f).

Certified copies:

a)☐ All b)☐ Some** c)☐ None of the:

1.☐ Certified copies of the priority documents have been received.

2.☐ Certified copies of the priority documents have been received in Application No. _____.

3.☐ Copies of the certified copies of the priority documents have been received in this National Stage application from the International Bureau (PCT Rule 17.2(a)).

** See the attached detailed Office action for a list of the certified copies not received.

Attachment(s)

1) ☒ Notice of References Cited (PTO-892)

2) ☐ Information Disclosure Statement(s) (PTO/SB/08a and/or PTO/SB/08b) Paper No(s)/Mail Date _____.

3) ☐ Interview Summary (PTO-413) Paper No(s)/Mail Date. _____ .

4) ☐ Other: _____.

DETAILED ACTION

The Amendment filed 07/25/16 has been entered. Claims 1-16, 18 and 19 are currently pending. Claim 17 has been cancelled and claims 18 and 19 are newly added. Despite the claim amendments and Arguments, the previous rejections are maintained as detailed below. The present application is being examined under the pre-AIA first to invent provisions.

Claim Rejections - 35 USC § 102

The following is a quotation of the appropriate paragraphs of pre-AIA 35 U.S.C. 102 that form the basis for the rejections under this section made in this Office action:

> A person shall be entitled to a patent unless –
>
> (a) the invention was known or used by others in this country, or patented or described in a printed publication in this or a foreign country, before the invention thereof by the applicant for a patent.

REJECTION #1: *Galasso*

Claims 1-6, 8-15 and 17-19 are rejected under pre-AIA 35 U.S.C. 102(a) as being anticipated by Galasso et al. (U.S. Patent Pub. No. 2012/0080279) (previously cited). Galasso is directed to a method and apparatus for sag adjustment. See Abstract.

Claim 1: Galasso discloses an air bleed system [see Figs. 2-4] for a lower fork of a suspension fork or shock absorber (200, 300, 400) comprising: a fluid passage (224, 424-2) between an interior (inside 210) of the lower fork and an exterior (outside 210) of the lower fork; and a manually operable valve (214, 314, 414, 470) [see para. 0037 (either a “rotary sleeve" and/or a "bleed valve" such as a Schrader-type valve)] located

in the lower fork [note: "lower" is a relative term], said manually operable valve having a first position substantially closing said fluid passage [see, e.g., Fig. 2 (when 236 covers 224)] and a second position allowing a fluid to flow between said interior and said exterior [see, e.g., Fig. 2 (when 214 is screwed upward such that 224 is open)]. See Figs. 2-4 (note: "lower" is a relative term, aside from the fact that these are components of the fork or shock absorber, which is not being claimed here).

Galasso further discloses that said fluid passage and said manually operable valve are located at a distance from an oil bath lubrication (272) within said lower fork, such that when said manually operable valve is in said second position, most, if not all, of said oil bath lubrication remains within said lower fork and such that when trapped air pressure inside said lower fork that is higher than a local ambient pressure outside of said suspension fork or shock absorber is relieved, most, if not all, of said oil bath lubrication that is within in said lower fork remains within said lower fork. See Figs. 2-4.

Claim 2: Galasso discloses that said suspension fork or shock absorber comprises: a damper. See Figs. 2-4.

Claim 3: Galasso discloses that said fluid comprises: a gas. See Abstract.

Claim 4: Galasso discloses a valve activator (threads of 214, 314, 414 or pin of Schrader-type 470) coupled with said manually operable valve, said valve activator comprising: an activation position [see, e.g., Fig. 2 (when 214 is screwed such that 236 covers 224)] placing said manually operable valve into said first position; and a deactivation position [see, e.g., Fig. 2 (when 214 is screwed upward such that 224 is open)] placing said manually operable valve into said second position, and whereupon

when in said activation position, the trapped air pressure in said lower fork is equalized with the local ambient air pressure. See Figs. 2-4.

Claim 5: Galasso discloses that said valve activator comprises: a button (pin of 470) to select said activation and said deactivation positions. See Fig. 4 (pin of Schrader-type valve 470 pushed to open or close bleed port 468).

Claim 6: Galasso discloses said valve activator is positioned on a feature of said suspension. See Figs. 2-4. The fact that this "feature" is die-cast is a method of making, not a structural limitation. Also, it does not appear that this "feature" is part of the claimed apparatus, but part of the larger suspension for which this system is employed.

Claim 8: Galasso discloses said manually operable valve comprises: a spring (328) coupled with said valve activator, whereupon when said valve activator is moved into said deactivation position, said spring biases said valve activator toward said first position. See Fig. 3.

Claim 9: Galasso discloses that said second position comprises: a sealing engagement between said sealing o-ring (236) and a seal bore (224), wherein when in said sealing engagement, said trapped air pressure does not by-pass into or out of said lower fork. See Fig. 2.

Claim 10: Galasso discloses a fluid equalization system [see Figs. 2-4] for a lower fork of a suspension fork or shock absorber (200, 300, 400) comprising: a fluid flow path (224, 424-2) between a first region of said lower fork of said suspension fork or shock absorber having a first pressure (inside 210) and a second region (outside

210) having a second pressure; and a valve member (214, 314, 414, 470) [see para. 0037 (either a “rotary sleeve" and/or a "bleed valve" such as a Schrader-type valve)] located in said lower fork of said suspension fork or said shock absorber, said valve member having a first position [see, e.g., Fig. 2 (when 236 covers 224)] substantially obstructing said flow path and a second position wherein said flow path is open [see, e.g., Fig. 2 (when 214 is screwed upward such that 224 is open)]. See Figs. 2-4 (note: “lower” is a relative term, aside from the fact that these are components of the fork or shock absorber, which is not being claimed here).

Galasso further discloses that said fluid flow path and said valve member are located at a distance from an oil bath lubrication (272) within said lower fork, such that when said valve member is in said second position, most, if not all, of said oil bath lubrication remains within said lower fork and such that when trapped air pressure inside said lower fork that is higher than a local ambient pressure outside of said suspension fork or shock absorber is relieved, most, if not all, of said oil bath lubrication that is within in said lower fork remains within said lower fork. See Figs. 2-4.

Claim 11: Galasso discloses that said first region of said suspension fork or shock absorber having said first pressure is one of an interior of said suspension fork or shock absorber and an exterior of said suspension fork or shock absorber. See Fig. 2.

Claim 12: Galasso discloses that said second region having said second pressure is one of an interior of said suspension fork or shock absorber and an exterior of said suspension fork or shock absorber. See Fig. 2.

Claim 13: Galasso discloses that said first position comprises: a sealing o-ring (336-2) partially enclosed by a valve activator (314); and a spring (328), said sealing o-ring comprising: a sealed position [see Fig. 3 (336-2 at 224)], wherein when in said sealed position, said spring biases said valve activator toward a closed position and said sealing o-ring presses against a sealing bore (224) such that air pressure does not pass into or out of said suspension fork or shock absorber. See Fig. 3.

Claim 14: Galasso discloses that said valve activator comprises: a button (either 214 or 470) configured for being pressed for activation or deactivation. See Figs. 2-4.

Claim 15: see claim 6 above.

Claim 18: Galasso discloses an air bleed system [Figs. 2-4] for a lower fork of a suspension fork or shock absorber (200, 300, 400) comprising: a fluid passage (224, 424-2) between an interior of the lower fork and an exterior of the lower fork; and a manually operable valve (214, 314, 414, 470) [see para. 0037 (either a “rotary sleeve" and/or a "bleed valve" such as a Schrader-type valve)] located in the lower fork, said manually operable valve having a first position [see, e.g., Fig. 2 (when 236 covers 224)] substantially closing said fluid passage and a second position allowing a fluid to flow between said interior and said exterior of the lower fork [see, e.g., Fig. 2 (when 214 is screwed upward such that 224 is open)]. See Figs. 2-4 (note: “lower” is a relative term, aside from the fact that these are components of the fork or shock absorber, which is not being claimed here).

Claim 19: Galasso discloses that said manually operable valve is located proximate to an upper end of the lower fork. See Figs. 2-4.

REJECTION #2: *Larsson*

Claims 18 and 19 are rejected under pre-AIA 35 U.S.C. 102(a) as being anticipated by Larsson et al. (U.S. Patent No. 7,255,210). Larsson is directed to a telescopic fork leg for a vehicle. See Abstract.

Claim 18: Larsson discloses an air bleed system [Figs. 2-5; col. 1, line 24 ("gas")] for a lower fork of a suspension fork or shock absorber [see Figs. 1A, 1B] comprising: a fluid passage (13, 22) between an interior of the lower fork and an exterior of the lower fork; and a manually operable valve (14) located in the lower fork, said manually operable valve having a first position substantially closing said fluid passage and a second position allowing a fluid to flow between said interior and said exterior of the lower fork. See col. 2, line 27 ("adjustable bleed needle function"); Figs. 2-5 (note: "lower" is a relative term, aside from the fact that these are components of the fork or shock absorber, which is not being claimed here).

Claim 19: Larsson discloses that said manually operable valve is located proximate to an upper end of the lower fork. See Figs. 2-5.

Claim Rejections - 35 USC § 103

The following is a quotation of pre-AIA 35 U.S.C. 103(a) which forms the basis for all obviousness rejections set forth in this Office action:

> (a) A patent may not be obtained though the invention is not identically disclosed or described as set forth in section 102 of this title, if the differences between the subject matter sought to be patented and the prior art are such that the subject matter as a whole would have been obvious at the time the invention was made to a person having ordinary skill in the art to which said subject matter pertains. Patentability shall not be negatived by the manner in which the invention was made.

REJECTION #1: *Galasso in view of Hiramoto*

Claims 7 and 16 are rejected under pre-AIA 35 U.S.C. 103(a) as being unpatentable over Galasso in view of Hiramoto et al. (U.S. Patent No. 5,697,477) (previously cited). Hiramoto is directed to an air damper. See Abstract.

Claim 7: Galasso is relied upon as in claim 1 above. Galasso further discloses a diametrical recess (224) and a sealing o-ring (236) with a sealed and unsealed position. See Fig. 2. However, in Galasso the unsealed position is attained when the o-ring moves *out of* the diametrical recess rather than "*into* said diametrical recess."

Hiramoto discloses a diametrical recess (52); and a sealing o-ring (42) comprising: a sealed position [Fig. 5]; and an unsealed position [Fig. 4], wherein said sealed position seals the system, whereupon said activation, said sealing o-ring moves into said diametrical recess, thereby attaining said unsealed position and letting air pressure by-pass into or out of said system via a vent hole. See Figs. 4, 5. It would have been obvious to a person having ordinary skill in the art at the time of the invention to modify Galasso in this manner because the sealing o-ring can either be moved into a recess to attain a sealed position or an unseal position, so it would have been obvious to try one of these two options.

Claim 16: Galasso is relied upon as in claim 10 above. This limitation is addressed in claim 7 above. See obviousness statement above.

Response to Arguments

Applicant's arguments filed 07/25/16 have been fully considered but they are not persuasive. Applicant argues that the new limitations to independent claims 1 and 10 overcome the section 102(b) rejections previously set forth. See Remarks, pages 8-11. However, Applicant solely makes conclusory arguments without explaining which limitations allegedly are not met. This is not persuasive. Applicant's argument with regard to new independent claim 18 suffers from the same problems.

First, it should be noted that claims 1, 10 and 18 recite numerous limitations pertaining to the oil bath and the suspension fork (or shock absorber), but these are not components of the claimed air bleed system (or fluid equalization system), but instead components that the claimed system is intended to be used in. Since this is not a structural limitation on the air bleed system itself, it is unclear if these components are, in fact, required elements.

Second, it should be noted that Applicant makes numerous references to a "lower" fork, but the terms "below" and "lower" are relative terms, which are ultimately meaningless unless a frame of perspective is claimed. In other words, a component that is "upper" may be construed as "lower" simply by inverting the Figure. Additional claim language is necessary to preclude such permissibly broad interpretations.

Third, new claims 18 and 19 are incredibly broad. All independent claim 18 requires is the presence of a bleed valve in a lower fork of a suspension system. This is well known in the art. An additional 102(b) reference has been provided above as an example.

For the foregoing reasons, all pending claims remain rejected as detailed above.

Conclusion

Any inquiry concerning this communication or earlier communications from the examiner should be directed to VISHAL SAHNI whose telephone number is (571)270-3838. The examiner can normally be reached on Monday - Friday 8:30-5.

If attempts to reach the examiner by telephone are unsuccessful, the examiner's supervisor, Robert Siconolfi can be reached on (571) 272-7124. The fax phone number for the organization where this application or proceeding is assigned is 571-273-8300.

Information regarding the status of an application may be obtained from the Patent Application Information Retrieval (PAIR) system. Status information for published applications may be obtained from either Private PAIR or Public PAIR. Status information for unpublished applications is available through Private PAIR only. For more information about the PAIR system, see http://pair-direct.uspto.gov. Should you have questions on access to the Private PAIR system, contact the Electronic Business Center (EBC) at 866-217-9197 (toll-free). If you would like assistance from a USPTO Customer Service Representative or access to the automated information system, call 800-786-9199 (IN USA OR CANADA) or 571-272-1000.

/VISHAL SAHNI/
Primary Examiner, Art Unit 3657
August 9, 2016

Notice of References Cited	Application/Control No. 14/822,859	Applicant(s)/Patent Under Reexamination BECKER, WILLIAM M.	
	Examiner VISHAL SAHNI	Art Unit 3657	Page 1 of 1

U.S. PATENT DOCUMENTS

*		Document Number Country Code-Number-Kind Code	Date MM-YYYY	Name	CPC Classification	US Classification
*	A	US-7,255,210 B2	08-2007	Larsson; Mats	F16F9/342	188/280
	B	US-				
	C	US-				
	D	US-				
	E	US-				
	F	US-				
	G	US-				
	H	US-				
	I	US-				
	J	US-				
	K	US-				
	L	US-				
	M	US-				

FOREIGN PATENT DOCUMENTS

*		Document Number Country Code-Number-Kind Code	Date MM-YYYY	Country	Name	CPC Classification
	N					
	O					
	P					
	Q					
	R					
	S					
	T					

NON-PATENT DOCUMENTS

*		Include as applicable: Author, Title Date, Publisher, Edition or Volume, Pertinent Pages)
	U	
	V	
	W	
	X	

*A copy of this reference is not being furnished with this Office action. (See MPEP § 707.05(a).)
Dates in MM-YYYY format are publication dates. Classifications may be US or foreign.

Index of Claims	Application/Control No.	Applicant(s)/Patent Under Reexamination
	14822859	BECKER, WILLIAM M.
	Examiner	**Art Unit**
	VISHAL SAHNI	3657

✓	Rejected	-	Cancelled	N	Non-Elected	A	Appeal
=	Allowed	÷	Restricted	I	Interference	O	Objected

☐ Claims renumbered in the same order as presented by applicant ☐ CPA ☐ T.D. ☐ R.1.47

CLAIM		DATE								
Final	Original	09/28/2015	02/17/2016	08/09/2016						
	1	✓	✓	✓						
	2		✓	✓						
	3		✓	✓						
	4		✓	✓						
	5		✓	✓						
	6		✓	✓						
	7		✓	✓						
	8		✓	✓						
	9		✓	✓						
	10		✓	✓						
	11		✓	✓						
	12		✓	✓						
	13		✓	✓						
	14		✓	✓						
	15		✓	✓						
	16		✓	✓						
	17		✓	-						
	18			✓						
	19			✓						

EAST Search History

EAST Search History (Prior Art)

Ref #	Hits	Search Query	DBs	Default Operator	Plurals	Time Stamp
L5	3	"13890753"	US-PGPUB; USPAT; USOCR; FPRS; EPO; JPO; DERWENT; IBM_TDB	OR	OFF	2016/08/09 19:09
S1	3	"20130134687"	US-PGPUB; USPAT; USOCR; FPRS; EPO; JPO; DERWENT; IBM_TDB	OR	OFF	2015/01/05 14:26
S2	2	"20130319805"	US-PGPUB; USPAT; USOCR; FPRS; EPO; JPO; DERWENT; IBM_TDB	OR	OFF	2015/01/05 14:39
S3	126	"188".clas. and fork and bleed and valve and spring	US-PGPUB; USPAT; USOCR; FPRS; EPO; JPO; DERWENT; IBM_TDB	OR	OFF	2015/01/05 14:54
S4	28	"188".clas. and fork.ab. and bleed and valve and spring	US-PGPUB; USPAT; USOCR; FPRS; EPO; JPO; DERWENT; IBM_TDB	OR	OFF	2015/01/05 14:55
S5	22	"188".clas. and fork and bleed and valve and spring and elevation	US-PGPUB; USPAT; USOCR; FPRS; EPO; JPO; DERWENT; IBM_TDB	OR	OFF	2015/01/05 15:03
S6	74	"188".clas. and bleed.ab. and valve and spring	US-PGPUB; USPAT; USOCR; FPRS; EPO; JPO; DERWENT; IBM_TDB	OR	OFF	2015/01/05 15:50
S7	11	(188/322.13,322.19-322.21.ccls. or	US-PGPUB;	OR	OFF	2015/01/05

		267/64.18,64.22,64.26.ccls.) and bleed.ab. and valve and spring	USPAT; USOCR; FPRS; EPO; JPO; DERWENT; IBM_TDB			15:57
S9	3	"188".clas. and seal and (diametrical adj recess)	US-PGPUB; USPAT; USOCR; FPRS; EPO; JPO; DERWENT; IBM_TDB	OR	OFF	2015/01/05 16:34
S10	0	schrader and seal and (diametrical adj recess)	US-PGPUB; USPAT; USOCR; FPRS; EPO; JPO; DERWENT; IBM_TDB	OR	OFF	2015/01/05 16:35
S11	10	schrader and (seal near recess)	US-PGPUB; USPAT; USOCR; FPRS; EPO; JPO; DERWENT; IBM_TDB	OR	OFF	2015/01/05 16:36
S12	72	schrader and (seal near (mov$3 or adjust$3 or push$3 or shift$3))	US-PGPUB; USPAT; USOCR; FPRS; EPO; JPO; DERWENT; IBM_TDB	OR	OFF	2015/01/05 16:37
S13	1553	(o-ring near (mov$3 or adjust$3 or push$3 or shift$3))	US-PGPUB; USPAT; USOCR; FPRS; EPO; JPO; DERWENT; IBM_TDB	OR	OFF	2015/01/05 16:39
S14	34	(o-ring near (mov$3 or adjust$3 or push$3 or shift$3) near (open$3 or clos$3))	US-PGPUB; USPAT; USOCR; FPRS; EPO; JPO; DERWENT; IBM_TDB	OR	OFF	2015/01/05 16:39
S15	50	becker-william-m.in.	US-PGPUB; USPAT; USOCR; FPRS; EPO; JPO; DERWENT; IBM_TDB	OR	OFF	2015/01/05 20:59
S16	15	becker-william-m.in. and o-ring	US-PGPUB; USPAT; USOCR; FPRS; EPO; JPO; DERWENT;	OR	OFF	2015/01/05 20:59

			IBM_TDB			
S17	25	(188/322.13,322.19-322.21.ccls. or 267/64.18,64.22,64.26.ccls.) and bleed and valve and spring and fork	US-PGPUB; USPAT; USOCR; FPRS; EPO; JPO; DERWENT; IBM_TDB	OR	OFF	2015/03/27 12:01
S18	77	(F16F9/34,346,3465.cpc. or B62K2025/048.cpc.) and bleed and valve and spring and fork	US-PGPUB; USPAT; USOCR; FPRS; EPO; JPO; DERWENT; IBM_TDB	OR	OFF	2015/03/27 12:06
S19	13	(188/322.13,322.19-322.21.ccls. or 267/64.18,64.22,64.26.ccls.) and bleed.ab. and valve and spring	US-PGPUB; USPAT; USOCR; FPRS; EPO; JPO; DERWENT; IBM_TDB	OR	OFF	2015/03/27 12:06
S20	14	(F16F9/34,346,3465.cpc. or B62K2025/048.cpc.) and becker-william-m.in.	US-PGPUB; USPAT; USOCR; FPRS; EPO; JPO; DERWENT; IBM_TDB	OR	OFF	2015/03/27 12:08
S21	0	(fork and (air adj bleed) and gap and oil and damper and seal).clm.	US-PGPUB; USPAT; USOCR; FPRS; EPO; JPO; DERWENT; IBM_TDB	OR	OFF	2015/03/27 12:09
S22	0	(fork and (air and bleed) and gap and oil and damper and seal).clm.	US-PGPUB; USPAT; USOCR; FPRS; EPO; JPO; DERWENT; IBM_TDB	OR	OFF	2015/03/27 12:10
S23	15	(F16F9/34,346,3465,435.cpc. or B62K2025/048.cpc.) and becker-william-m.in.	US-PGPUB; USPAT; USOCR; FPRS; EPO; JPO; DERWENT; IBM_TDB	OR	OFF	2015/03/27 12:14
S24	5	(F16F9/435.cpc.) and (air and bleed)	US-PGPUB; USPAT; USOCR; FPRS; EPO; JPO; DERWENT; IBM_TDB	OR	OFF	2015/03/27 12:15
S25	1	"13890753"	USPAT	OR	OFF	2015/09/28 12:12
S26	148	(F16F9/34,346,3465.cpc. or	US-PGPUB;	OR	OFF	2015/09/28

		B62K2025/048.cpc.) and bleed and valve	USPAT; USOCR; FPRS; EPO; JPO; DERWENT; IBM_TDB			13:44
S27	41	(F16F9/34,346,3465.cpc. or B62K2025/048.cpc.) and bleed and valve and (manual$2)	US-PGPUB; USPAT; USOCR; FPRS; EPO; JPO; DERWENT; IBM_TDB	OR	OFF	2015/09/28 13:44
S28	15	(188/322.13,322.19-322.21.ccls. or 267/64.18,64.22,64.26.ccls.) and bleed.ab. and valve	US-PGPUB; USPAT; USOCR; FPRS; EPO; JPO; DERWENT; IBM_TDB	OR	OFF	2015/09/28 13:44
S29	14	("5503258" | "5697477" | "5816281" | "5853071" | "6592136" | "7255210" | "8480064" | "9103400" | "20030001358" | "20060289258" | "20100186836" | "20120007327" | "20120080279" | "20130319805").PN.	US-PGPUB; USPAT	OR	OFF	2016/02/16 21:21
S30	1	"20130319805"	USPAT	OR	OFF	2016/02/16 21:24
S31	10	(F16F9/34,346,3465.cpc. or B62K2025/048.cpc.) and (bleed adj valve$1)	US-PGPUB; USPAT; USOCR; FPRS; EPO; JPO; DERWENT; IBM_TDB	OR	OFF	2016/02/16 21:34
S32	19	(F16F9/34,346,3465.cpc. or B62K2025/048.cpc.) and (bleed$3 near valve$1)	US-PGPUB; USPAT; USOCR; FPRS; EPO; JPO; DERWENT; IBM_TDB	OR	OFF	2016/02/16 21:35
S33	77	(F16F9/34,346,3465.cpc. or B62K2025/048.cpc.) and (bleed$3) and fork and (air or gas) and oil	US-PGPUB; USPAT; USOCR; FPRS; EPO; JPO; DERWENT; IBM_TDB	OR	OFF	2016/08/08 23:59
S34	89	(F16F9/34,346,3465.cpc. or B62K2025/048.cpc.) and (bleed$3) and fork and (air or gas) and (hydraulic or oil)	US-PGPUB; USPAT; USOCR; FPRS; EPO; JPO; DERWENT; IBM_TDB	OR	OFF	2016/08/08 23:59
S35	35	(suspension and fork).ab. and (bleed$3) and (air or gas) and (hydraulic or oil)	US-PGPUB; USPAT; USOCR; FPRS; EPO; JPO;	OR	OFF	2016/08/09 14:41

			DERWENT; IBM_TDB			
S36	110	(suspension or fork).ab. and suspension and fork and (bleed$3) and (air or gas) and (hydraulic or oil)	US-PGPUB; USPAT; USOCR; FPRS; EPO; JPO; DERWENT; IBM_TDB	OR	OFF	2016/08/09 14:54
S37	257	(suspension or fork).ab. and fox and suspension and fork	US-PGPUB; USPAT; USOCR; FPRS; EPO; JPO; DERWENT; IBM_TDB	OR	OFF	2016/08/09 15:08
S38	152	(suspension or fork).ab. and fox and suspension and fork and (oil or hydraulic) and (gas or air)	US-PGPUB; USPAT; USOCR; FPRS; EPO; JPO; DERWENT; IBM_TDB	OR	OFF	2016/08/09 15:08
S39	68	(suspension or fork).ab. and fox and suspension and fork and (oil or hydraulic) and (gas or air) and bleed$3	US-PGPUB; USPAT; USOCR; FPRS; EPO; JPO; DERWENT; IBM_TDB	OR	OFF	2016/08/09 15:09
S40	32	(suspension or fork).ab. and becker.in. and suspension and fork and (oil or hydraulic) and (gas or air) and bleed$3	US-PGPUB; USPAT; USOCR; FPRS; EPO; JPO; DERWENT; IBM_TDB	OR	OFF	2016/08/09 16:10
S41	1	((air adj bleed) and valve and (lower adj fork) and (oil adj bath)).clm.	US-PGPUB; USPAT; USOCR; FPRS; EPO; JPO; DERWENT; IBM_TDB	OR	OFF	2016/08/09 16:17
S42	78	"6592136"	USPAT	OR	OFF	2016/08/09 17:09

8/9/2016 7:10:55 PM
C:\Users\vsahni\Documents\EAST\Workspaces\14822859.wsp

Search Notes	Application/Control No.	Applicant(s)/Patent Under Reexamination
	14822859	BECKER, WILLIAM M.
	Examiner	**Art Unit**
	VISHAL SAHNI	3657

CPC- SEARCHED

Symbol	Date	Examiner
F16F9/34,346,3465,435; B62K2025/048	9/28/2015	VRS
F16F9/34,346,3465,435; B62K2025/048	8/9/2016	VRS

CPC COMBINATION SETS - SEARCHED

Symbol	Date	Examiner

US CLASSIFICATION SEARCHED

Class	Subclass	Date	Examiner

SEARCH NOTES

Search Notes	Date	Examiner
Class 188 and 267 term search (see search history)	9/28/2015	VRS

INTERFERENCE SEARCH

US Class/ CPC Symbol	US Subclass / CPC Group	Date	Examiner

To: patents@wagnerblecher.com,,
From: PAIR_eOfficeAction@uspto.gov
Cc: PAIR_eOfficeAction@uspto.gov
Subject: Private PAIR Correspondence Notification for Customer Number 70408

Aug 16, 2016 05:29:18 AM

Dear PAIR Customer:

FOX C/O WAGNER BLECHER LLP
123 WESTRIDGE DRIVE
WATSONVILLE, CA 95076
UNITED STATES

The following USPTO patent application(s) associated with your Customer Number, 70408 , have new outgoing correspondence. This correspondence is now available for viewing in Private PAIR.

The official date of notification of the outgoing correspondence will be indicated on the form PTOL-90 accompanying the correspondence.

Disclaimer:
The list of documents shown below is provided as a courtesy and is not part of the official file wrapper. The content of the images shown in PAIR is the official record.

Application	Document	Mailroom Date	Attorney Docket No.
14822859	CTNF	08/16/2016	FOX-P5-08-12-US.CON
	892	08/16/2016	FOX-P5-08-12-US.CON

To view your correspondence online or update your email addresses, please visit us anytime at https://sportal.uspto.gov/secure/myportal/privatepair.

If you have any questions, please email the Electronic Business Center (EBC) at EBC@uspto.gov with 'e-Office Action' on the subject line or call 1-866-217-9197 during the following hours:

Monday - Friday 6:00 a.m. to 12:00 a.m.

Thank you for prompt attention to this notice,

UNITED STATES PATENT AND TRADEMARK OFFICE

PATENT APPLICATION INFORMATION RETRIEVAL SYSTEM

To: patents@wagnerblecher.com,,
From: PAIR_eOfficeAction@uspto.gov
Cc: PAIR_eOfficeAction@uspto.gov
Subject: Private PAIR Correspondence Notification for Customer Number 70408

Aug 16, 2016 05:29:18 AM

Dear PAIR Customer:

FOX C/O WAGNER BLECHER LLP
123 WESTRIDGE DRIVE
WATSONVILLE, CA 95076
UNITED STATES

The following USPTO patent application(s) associated with your Customer Number, 70408 , have new outgoing correspondence. This correspondence is now available for viewing in Private PAIR.

The official date of notification of the outgoing correspondence will be indicated on the form PTOL-90 accompanying the correspondence.

Disclaimer:
The list of documents shown below is provided as a courtesy and is not part of the official file wrapper. The content of the images shown in PAIR is the official record.

Application	Document	Mailroom Date	Attorney Docket No.
14822859	CTNF	08/16/2016	FOX-P5-08-12-US.CON
	892	08/16/2016	FOX-P5-08-12-US.CON

To view your correspondence online or update your email addresses, please visit us anytime at https://sportal.uspto.gov/secure/myportal/privatepair.

If you have any questions, please email the Electronic Business Center (EBC) at EBC@uspto.gov with 'e-Office Action' on the subject line or call 1-866-217-9197 during the following hours:

Monday - Friday 6:00 a.m. to 12:00 a.m.

Thank you for prompt attention to this notice,

UNITED STATES PATENT AND TRADEMARK OFFICE

PATENT APPLICATION INFORMATION RETRIEVAL SYSTEM

To: patents@wagnerblecher.com,,
From: PAIR_eOfficeAction@uspto.gov
Cc: PAIR_eOfficeAction@uspto.gov
Subject: Private PAIR Correspondence Notification for Customer Number 70408

Aug 16, 2016 05:29:18 AM

Dear PAIR Customer:

FOX C/O WAGNER BLECHER LLP
123 WESTRIDGE DRIVE
WATSONVILLE, CA 95076
UNITED STATES

The following USPTO patent application(s) associated with your Customer Number, 70408 , have new outgoing correspondence. This correspondence is now available for viewing in Private PAIR.

The official date of notification of the outgoing correspondence will be indicated on the form PTOL-90 accompanying the correspondence.

Disclaimer:
The list of documents shown below is provided as a courtesy and is not part of the official file wrapper. The content of the images shown in PAIR is the official record.

Application	Document	Mailroom Date	Attorney Docket No.
14822859	CTNF	08/16/2016	FOX-P5-08-12-US.CON
	892	08/16/2016	FOX-P5-08-12-US.CON

To view your correspondence online or update your email addresses, please visit us anytime at https://sportal.uspto.gov/secure/myportal/privatepair.

If you have any questions, please email the Electronic Business Center (EBC) at EBC@uspto.gov with 'e-Office Action' on the subject line or call 1-866-217-9197 during the following hours:

Monday - Friday 6:00 a.m. to 12:00 a.m.

Thank you for prompt attention to this notice,

UNITED STATES PATENT AND TRADEMARK OFFICE

PATENT APPLICATION INFORMATION RETRIEVAL SYSTEM

To: patents@wagnerblecher.com,,
From: PAIR_eOfficeAction@uspto.gov
Cc: PAIR_eOfficeAction@uspto.gov
Subject: Private PAIR Correspondence Notification for Customer Number 70408

Aug 16, 2016 05:29:18 AM

Dear PAIR Customer:

FOX C/O WAGNER BLECHER LLP
123 WESTRIDGE DRIVE
WATSONVILLE, CA 95076
UNITED STATES

The following USPTO patent application(s) associated with your Customer Number, 70408 , have new outgoing correspondence. This correspondence is now available for viewing in Private PAIR.

The official date of notification of the outgoing correspondence will be indicated on the form PTOL-90 accompanying the correspondence.

Disclaimer:
The list of documents shown below is provided as a courtesy and is not part of the official file wrapper. The content of the images shown in PAIR is the official record.

Application	Document	Mailroom Date	Attorney Docket No.
14822859	CTNF	08/16/2016	FOX-P5-08-12-US.CON
	892	08/16/2016	FOX-P5-08-12-US.CON

To view your correspondence online or update your email addresses, please visit us anytime at https://sportal.uspto.gov/secure/myportal/privatepair.

If you have any questions, please email the Electronic Business Center (EBC) at EBC@uspto.gov with 'e-Office Action' on the subject line or call 1-866-217-9197 during the following hours:

Monday - Friday 6:00 a.m. to 12:00 a.m.

Thank you for prompt attention to this notice,

UNITED STATES PATENT AND TRADEMARK OFFICE

PATENT APPLICATION INFORMATION RETRIEVAL SYSTEM

To: patents@wagnerblecher.com,,
From: PAIR_eOfficeAction@uspto.gov
Cc: PAIR_eOfficeAction@uspto.gov
Subject: Private PAIR Correspondence Notification for Customer Number 70408

Aug 16, 2016 05:29:18 AM

Dear PAIR Customer:

FOX C/O WAGNER BLECHER LLP
123 WESTRIDGE DRIVE
WATSONVILLE, CA 95076
UNITED STATES

The following USPTO patent application(s) associated with your Customer Number, 70408 , have new outgoing correspondence. This correspondence is now available for viewing in Private PAIR.

The official date of notification of the outgoing correspondence will be indicated on the form PTOL-90 accompanying the correspondence.

Disclaimer:
The list of documents shown below is provided as a courtesy and is not part of the official file wrapper. The content of the images shown in PAIR is the official record.

Application	Document	Mailroom Date	Attorney Docket No.
14822859	CTNF	08/16/2016	FOX-P5-08-12-US.CON
	892	08/16/2016	FOX-P5-08-12-US.CON

To view your correspondence online or update your email addresses, please visit us anytime at https://sportal.uspto.gov/secure/myportal/privatepair.

If you have any questions, please email the Electronic Business Center (EBC) at EBC@uspto.gov with 'e-Office Action' on the subject line or call 1-866-217-9197 during the following hours:

Monday - Friday 6:00 a.m. to 12:00 a.m.

Thank you for prompt attention to this notice,

UNITED STATES PATENT AND TRADEMARK OFFICE

PATENT APPLICATION INFORMATION RETRIEVAL SYSTEM

To: patents@wagnerblecher.com,,
From: PAIR_eOfficeAction@uspto.gov
Cc: PAIR_eOfficeAction@uspto.gov
Subject: Private PAIR Correspondence Notification for Customer Number 70408

Aug 16, 2016 05:29:18 AM

Dear PAIR Customer:

FOX C/O WAGNER BLECHER LLP
123 WESTRIDGE DRIVE
WATSONVILLE, CA 95076
UNITED STATES

The following USPTO patent application(s) associated with your Customer Number, 70408 , have new outgoing correspondence. This correspondence is now available for viewing in Private PAIR.

The official date of notification of the outgoing correspondence will be indicated on the form PTOL-90 accompanying the correspondence.

Disclaimer:
The list of documents shown below is provided as a courtesy and is not part of the official file wrapper. The content of the images shown in PAIR is the official record.

Application	Document	Mailroom Date	Attorney Docket No.
14822859	CTNF	08/16/2016	FOX-P5-08-12-US.CON
	892	08/16/2016	FOX-P5-08-12-US.CON

To view your correspondence online or update your email addresses, please visit us anytime at https://sportal.uspto.gov/secure/myportal/privatepair.

If you have any questions, please email the Electronic Business Center (EBC) at EBC@uspto.gov with 'e-Office Action' on the subject line or call 1-866-217-9197 during the following hours:

Monday - Friday 6:00 a.m. to 12:00 a.m.

Thank you for prompt attention to this notice,

UNITED STATES PATENT AND TRADEMARK OFFICE

PATENT APPLICATION INFORMATION RETRIEVAL SYSTEM

To: patents@wagnerblecher.com,,
From: PAIR_eOfficeAction@uspto.gov
Cc: PAIR_eOfficeAction@uspto.gov
Subject: Private PAIR Correspondence Notification for Customer Number 70408

Aug 16, 2016 05:29:18 AM

Dear PAIR Customer:

FOX C/O WAGNER BLECHER LLP
123 WESTRIDGE DRIVE
WATSONVILLE, CA 95076
UNITED STATES

The following USPTO patent application(s) associated with your Customer Number, 70408 , have new outgoing correspondence. This correspondence is now available for viewing in Private PAIR.

The official date of notification of the outgoing correspondence will be indicated on the form PTOL-90 accompanying the correspondence.

Disclaimer:
The list of documents shown below is provided as a courtesy and is not part of the official file wrapper. The content of the images shown in PAIR is the official record.

Application	Document	Mailroom Date	Attorney Docket No.
14822859	CTNF	08/16/2016	FOX-P5-08-12-US.CON
	892	08/16/2016	FOX-P5-08-12-US.CON

To view your correspondence online or update your email addresses, please visit us anytime at https://sportal.uspto.gov/secure/myportal/privatepair.

If you have any questions, please email the Electronic Business Center (EBC) at EBC@uspto.gov with 'e-Office Action' on the subject line or call 1-866-217-9197 during the following hours:

Monday - Friday 6:00 a.m. to 12:00 a.m.

Thank you for prompt attention to this notice,

UNITED STATES PATENT AND TRADEMARK OFFICE

PATENT APPLICATION INFORMATION RETRIEVAL SYSTEM

UNITED STATES PATENT AND TRADEMARK OFFICE

UNITED STATES DEPARTMENT OF COMMERCE
United States Patent and Trademark Office
Address: COMMISSIONER FOR PATENTS
P.O. Box 1450
Alexandria, Virginia 22313-1450
www.uspto.gov

APPLICATION NO.	FILING DATE	FIRST NAMED INVENTOR	ATTORNEY DOCKET NO.	CONFIRMATION NO.
14/822,859	08/10/2015	William M. Becker	FOX-P5-08-12-US.CON	6345

70408 7590 11/15/2016
FOX C/O WAGNER BLECHER LLP
123 WESTRIDGE DRIVE
WATSONVILLE, CA 95076

EXAMINER
SAHNI, VISHAL R

ART UNIT	PAPER NUMBER
3657	

NOTIFICATION DATE	DELIVERY MODE
11/15/2016	ELECTRONIC

Please find below and/or attached an Office communication concerning this application or proceeding.

The time period for reply, if any, is set in the attached communication.

Notice of the Office communication was sent electronically on above-indicated "Notification Date" to the following e-mail address(es):

patents@wagnerblecher.com

PTOL-90A (Rev. 04/07)

Applicant-Initiated Interview Summary	Application No.	Applicant(s)	
	14/822,859	BECKER, WILLIAM M.	
	Examiner	Art Unit	
	VISHAL SAHNI	3657	

All participants (applicant, applicant's representative, PTO personnel):

(1) *VISHAL SAHNI*. (3)_____.

(2) *JOHN WAGNER (Attorney)*. (4)_____.

Date of Interview: *09 November 2016*.

Type: ☒ Telephonic ☐ Video Conference
☐ Personal [copy given to: ☐ applicant ☐ applicant's representative]

Exhibit shown or demonstration conducted: ☐ Yes ☐ No.
If Yes, brief description: _____.

Issues Discussed ☐101 ☐112 ☒102 ☐103 ☐Others
(For each of the checked box(es) above, please describe below the issue and detailed description of the discussion)

Claim(s) discussed: *1 and 18*.

Identification of prior art discussed: *USP 7255210 & USP Pub. 2012/0080279*.

Substance of Interview
(For each issue discussed, provide a detailed description and indicate if agreement was reached. Some topics may include: identification or clarification of a reference or a portion thereof, claim interpretation, proposed amendments, arguments of any applied references etc...)

Discussed current claim language and 102 rejections. Applicant acknolwedged deficiencies regarding breadth of the claim language and seeks to address them in a subsequent amendment. No agreement was reached.

Applicant recordation instructions: The formal written reply to the last Office action must include the substance of the interview. (See MPEP section 713.04). If a reply to the last Office action has already been filed, applicant is given a non-extendable period of the longer of one month or thirty days from this interview date, or the mailing date of this interview summary form, whichever is later, to file a statement of the substance of the interview

Examiner recordation instructions: Examiners must summarize the substance of any interview of record. A complete and proper recordation of the substance of an interview should include the items listed in MPEP 713.04 for complete and proper recordation including the identification of the general thrust of each argument or issue discussed, a general indication of any other pertinent matters discussed regarding patentability and the general results or outcome of the interview, to include an indication as to whether or not agreement was reached on the issues raised.

☐ Attachment

/VISHAL SAHNI/
Primary Examiner, Art Unit 3657

Summary of Record of Interview Requirements

Manual of Patent Examining Procedure (MPEP), Section 713.04, Substance of Interview Must be Made of Record
A complete written statement as to the substance of any face-to-face, video conference, or telephone interview with regard to an application must be made of record in the application whether or not an agreement with the examiner was reached at the interview.

Title 37 Code of Federal Regulations (CFR) § 1.133 Interviews
Paragraph (b)

In every instance where reconsideration is requested in view of an interview with an examiner, a complete written statement of the reasons presented at the interview as warranting favorable action must be filed by the applicant. An interview does not remove the necessity for reply to Office action as specified in §§ 1.111, 1.135. (35 U.S.C. 132)

37 CFR §1.2 Business to be transacted in writing.
All business with the Patent or Trademark Office should be transacted in writing. The personal attendance of applicants or their attorneys or agents at the Patent and Trademark Office is unnecessary. The action of the Patent and Trademark Office will be based exclusively on the written record in the Office. No attention will be paid to any alleged oral promise, stipulation, or understanding in relation to which there is disagreement or doubt.

The action of the Patent and Trademark Office cannot be based exclusively on the written record in the Office if that record is itself incomplete through the failure to record the substance of interviews.

It is the responsibility of the applicant or the attorney or agent to make the substance of an interview of record in the application file, unless the examiner indicates he or she will do so. It is the examiner's responsibility to see that such a record is made and to correct material inaccuracies which bear directly on the question of patentability.

Examiners must complete an Interview Summary Form for each interview held where a matter of substance has been discussed during the interview by checking the appropriate boxes and filling in the blanks. Discussions regarding only procedural matters, directed solely to restriction requirements for which interview recordation is otherwise provided for in Section 812.01 of the Manual of Patent Examining Procedure, or pointing out typographical errors or unreadable script in Office actions or the like, are excluded from the interview recordation procedures below. Where the substance of an interview is completely recorded in an Examiners Amendment, no separate Interview Summary Record is required.

The Interview Summary Form shall be given an appropriate Paper No., placed in the right hand portion of the file, and listed on the "Contents" section of the file wrapper. In a personal interview, a duplicate of the Form is given to the applicant (or attorney or agent) at the conclusion of the interview. In the case of a telephone or video-conference interview, the copy is mailed to the applicant's correspondence address either with or prior to the next official communication. If additional correspondence from the examiner is not likely before an allowance or if other circumstances dictate, the Form should be mailed promptly after the interview rather than with the next official communication.

The Form provides for recordation of the following information:
- Application Number (Series Code and Serial Number)
- Name of applicant
- Name of examiner
- Date of interview
- Type of interview (telephonic, video-conference, or personal)
- Name of participant(s) (applicant, attorney or agent, examiner, other PTO personnel, etc.)
- An indication whether or not an exhibit was shown or a demonstration conducted
- An identification of the specific prior art discussed
- An indication whether an agreement was reached and if so, a description of the general nature of the agreement (may be by attachment of a copy of amendments or claims agreed as being allowable). Note: Agreement as to allowability is tentative and does not restrict further action by the examiner to the contrary.
- The signature of the examiner who conducted the interview (if Form is not an attachment to a signed Office action)

It is desirable that the examiner orally remind the applicant of his or her obligation to record the substance of the interview of each case. It should be noted, however, that the Interview Summary Form will not normally be considered a complete and proper recordation of the interview unless it includes, or is supplemented by the applicant or the examiner to include, all of the applicable items required below concerning the substance of the interview.

A complete and proper recordation of the substance of any interview should include at least the following applicable items:
1) A brief description of the nature of any exhibit shown or any demonstration conducted,
2) an identification of the claims discussed,
3) an identification of the specific prior art discussed,
4) an identification of the principal proposed amendments of a substantive nature discussed, unless these are already described on the Interview Summary Form completed by the Examiner,
5) a brief identification of the general thrust of the principal arguments presented to the examiner,
   (The identification of arguments need not be lengthy or elaborate. A verbatim or highly detailed description of the arguments is not required. The identification of the arguments is sufficient if the general nature or thrust of the principal arguments made to the examiner can be understood in the context of the application file. Of course, the applicant may desire to emphasize and fully describe those arguments which he or she feels were or might be persuasive to the examiner.)
6) a general indication of any other pertinent matters discussed, and
7) if appropriate, the general results or outcome of the interview unless already described in the Interview Summary Form completed by the examiner.

Examiners are expected to carefully review the applicant's record of the substance of an interview. If the record is not complete and accurate, the examiner will give the applicant an extendable one month time period to correct the record.

Examiner to Check for Accuracy

If the claims are allowable for other reasons of record, the examiner should send a letter setting forth the examiner's version of the statement attributed to him or her. If the record is complete and accurate, the examiner should place the indication, "Interview Record OK" on the paper recording the substance of the interview along with the date and the examiner's initials.

UNITED STATES PATENT AND TRADEMARK OFFICE

USPTO Automated Interview Request (AIR)

Nov 8 2016

This paper requesting to schedule and/or conduct an interview is appropriate because:

This submission is requested to be accepted as an authorization for this interview to communicate via the internet. Recognizing that Internet communications are not secure, I hereby authorize the USPTO to communicate with the undersigned concerning scheduling of the interview via video conference, instant messaging, or electronic mail, and to conduct the interview in accordance with office practice including video conferencing.

Name(s):
John P. Wagner, Jr.

S-signature:
/John P Wagner Jr/

Registration Number:
35398

U.S. Application Number:
14822859

Confirmation Number:
6345

E-mail Address:
jwagner@wagnerblecher.com

Phone Number:
4082343649

Proposed Time of Interview:
11-17-2016 1:00 PM ET

Prefered Interview Type:
Telephonic

I am the applicant or applicant's representative for this application.

uspto UNITED STATES PATENT AND TRADEMARK OFFICE
PALM-SILVER

To: patents@wagnerblecher.com,,
From: PAIR_eOfficeAction@uspto.gov
Cc: PAIR_eOfficeAction@uspto.gov
Subject: Private PAIR Correspondence Notification for Customer Number 70408

Nov 15, 2016 03:37:56 AM

Dear PAIR Customer:

FOX C/O WAGNER BLECHER LLP
123 WESTRIDGE DRIVE
WATSONVILLE, CA 95076
UNITED STATES

The following USPTO patent application(s) associated with your Customer Number, 70408 , have new outgoing correspondence. This correspondence is now available for viewing in Private PAIR.

The official date of notification of the outgoing correspondence will be indicated on the form PTOL-90 accompanying the correspondence.

Disclaimer:
The list of documents shown below is provided as a courtesy and is not part of the official file wrapper. The content of the images shown in PAIR is the official record.

Application	Document	Mailroom Date	Attorney Docket No.
14822859	INTV.SUM.APP	11/15/2016	FOX-P5-08-12-US.CON

To view your correspondence online or update your email addresses, please visit us anytime at https://sportal.uspto.gov/secure/myportal/privatepair.

If you have any questions, please email the Electronic Business Center (EBC) at EBC@uspto.gov with 'e-Office Action' on the subject line or call 1-866-217-9197 during the following hours:

Monday - Friday 6:00 a.m. to 12:00 a.m.

Thank you for prompt attention to this notice,

UNITED STATES PATENT AND TRADEMARK OFFICE

PATENT APPLICATION INFORMATION RETRIEVAL SYSTEM

IN THE UNITED STATES PATENT AND TRADEMARK OFFICE

In re Application of: William M. Becker	)	
Application No.: 14/822,859	)	Examiner: Sahni, V.
Filed: 08/10/2015	)	Art Unit: 3657
For: METHOD AND APPARATUS FOR AN ADJUSTABLE DAMPER	)	Conf. No.: 6345

Commissioner for Patents
P.O. Box 1450
Alexandria, VA 22313-1450

Response to Non-Final Office Action

Dear Sir:

In response to the Non-Final Office action with a Notification date of August 16, 2016, Applicants respectfully request reconsideration of the above referenced patent application. Please consider the following amendments and remarks for allowance of the above-identified patent application.

Amended Claims begin on page 2 of this response.

Remarks begin on page 9 of this response

CLAIMS

1. (Currently Amended) An air bleed system assembly ~~for a lower fork of a suspension fork or shock absorber~~ comprising:

a lower fork, said lower fork configured to have a first end coupled to a vehicle wheel, and a second end telescopically engaged with a first end of an upper fork;

a fluid passage disposed between an interior of [[the]] said lower fork and an exterior of [[the]] said lower fork; and

a manually operable valve located in [[the]] said lower fork, said manually operable valve having a first position substantially closing said fluid passage and a second position allowing a fluid to flow between said interior and said exterior, wherein said fluid passage and said manually operable valve are located at a distance from an oil bath lubrication within said lower fork, such that when said manually operable valve is in said second position, most, if not all of said oil bath lubrication remains within said lower fork and such that when trapped air pressure inside said lower fork, that is higher than a local ambient air pressure outside of said suspension fork or shock absorber, is relieved most, if not all of said oil bath lubrication that is within said lower fork remains within said lower fork.

2. (Canceled)

3. (Currently Amended) The air bleed system assembly of claim 1, wherein said fluid comprises:

a gas.

4. (Currently Amended) The air bleed system assembly of claim 1, further comprising:

a valve activator coupled with said manually operable valve, said valve activator comprising:

an activation position placing said manually operable valve into said first position; and

a deactivation position placing said manually operable valve into said second position, and whereupon when in said activation position, the trapped air pressure in said lower fork is equalized with the local ambient air pressure.

5. (Currently Amended) The air bleed system assembly of claim 4, wherein said valve activator comprises:

a button to select said activation position and said deactivation position.

6. (Currently Amended) The air bleed system assembly of claim 4, wherein said valve activator is located on a die-cast feature of said suspension fork or shock absorber.

7. (Currently Amended) The air bleed system assembly of claim 6, further comprising:

a diametrical recess; and

a sealing o-ring comprising:

a sealed position; and

an unsealed position, wherein said sealed position seals between said die-cast feature and said lower fork, whereupon when said valve activator is moved from said activation position to said deactivation position, said sealing o-ring

moves into said diametrical recess, thereby attaining said unsealed position and letting air pressure by-pass into or out of said lower fork via a vent hole.

8. (Currently Amended) The air bleed system assembly of claim 4, wherein said manually operable valve comprises:

a spring coupled with said valve activator, whereupon when said valve activator is moved into said deactivation position, said spring biases said valve activator toward said first position.

9. (Currently Amended) The air bleed system assembly of claim 8, wherein said second position comprises:

a sealing engagement between said sealing o-ring and a seal bore, wherein when in said sealing engagement, said trapped air pressure does not by-pass into or out of said lower fork.

10. (Currently Amended) A fluid equalization system ~~for a lower fork of a suspension fork or shock absorber~~ comprising:

a lower fork configured to have a first end coupled a vehicle wheel, and a second end telescopically engaged with a first end of an upper fork;

a fluid flow path between a first region of said lower fork ~~of said suspension fork or shock absorber~~ having a first pressure and a second region having a second pressure; and

a valve member located in said lower fork ~~of said suspension fork or said shock absorber~~, said valve member having a first position substantially obstructing said fluid

flow path and a second position for which said fluid flow path is open, wherein said fluid flow path and said valve member are located at a distance from an oil bath lubrication within said lower fork, such that when said valve member is in said second position, most, if not all of said oil bath lubrication remains within said lower fork and such that when trapped air pressure inside said lower fork, that is higher than a local ambient air pressure outside of said suspension fork or shock absorber, is relieved most, if not all of said oil bath lubrication that is within said lower fork remains within said lower fork.

11. (Currently Amended) The fluid equalization system of claim 10, wherein said first region of said ~~suspension fork or shock absorber~~ lower fork having said first pressure is one of an interior of said ~~suspension fork or shock absorber~~ lower fork and an exterior of said ~~suspension fork or shock absorber~~ lower fork.

12. (Currently Amended) The fluid equalization system of claim 10, wherein said second region having said second pressure is one of an interior of said ~~suspension fork or shock absorber~~ lower fork and an exterior of said ~~suspension fork or shock absorber~~ lower fork.

13. (Currently Amended) The fluid equalization system of claim 10, wherein said first position comprises:

a sealing o-ring partially enclosed by a valve activator; and

a spring, said sealing o-ring comprising:

a sealed position, wherein when in said sealed position, said spring biases said valve activator toward a closed position and said sealing o-ring presses

against a sealing bore such that air pressure does not pass into or out of said ~~suspension fork or shock absorber~~ lower fork.

14. (Previously Presented) The fluid equalization system of claim 13, wherein said valve activator comprises:

a button for activation or deactivation.

15. (Currently Amended) The fluid equalization system of claim 13, wherein said valve activator is located on a die-cast feature of said ~~suspension fork or shock absorber~~ lower fork.

16. (Currently Amended) The fluid equalization system of claim 10, wherein said second position comprises:

a diametrical recess;

a sealing o-ring partially enclosed by a valve activator; and

a spring, said sealing o-ring comprising:

an unsealed position, wherein when in said unsealed position, said sealing o-ring moves into said diametrical recess, thereby letting air pressure by-pass into or out of said ~~suspension fork or shock absorber~~ lower fork.

17. (Canceled)

18. (Currently Amended) A lower fork and air bleed system assembly ~~An air bleed system for a lower fork of a suspension fork or shock absorber~~ comprising:

a lower fork of a suspension, said lower fork configured to have a first end coupled to an axle of a vehicle wheel, and a second end telescopically engaged with a first end of an upper fork;

a fluid passage disposed between an interior of [[the]] said lower fork and an exterior of [[the]] said lower fork; and

a manually operable valve located in [[the]] said lower fork, said manually operable valve having a first position substantially closing said fluid passage and a second position allowing a fluid to flow between said interior and said exterior of [[the]] said lower fork.

19. (Currently Amended) The lower fork and air bleed system assembly ~~air bleed system~~ of claim 18, wherein said manually operable valve is located proximate to an upper end of [[the]] said lower fork.

20. (New) The air bleed system assembly of Claim 1 wherein said fluid passage is further located between a lower leg seal of said lower fork and an upper bushing of said lower fork.

21. (New) The fluid equalization system of Claim 10 wherein said fluid passage is further located between a lower leg seal of said lower fork and an upper bushing of said lower fork.

22. (New) The lower fork and air bleed system assembly of Claim 18 wherein said fluid passage is further located between a lower leg seal of said lower fork and an upper bushing of said lower fork.

REMARKS

Claims 1-16, 18 and 19 are pending in the application. Claims 1-16, 18 and 19 are rejected.

EXAMINER INTERVIEW SUMMARY

A telephonic Examiner Interview was held on November 9, 2016. Participants were Examiner Vishal Sahni and Applicants' attorney John P. Wagner, Jr. (35,398). Attorney for Applicants and Examiner Sahni discussed the present Office Action, the cited references, and the present Application and Claims. No agreement was reached with respect to the present Application. Applicant wishes to thank Examiner Sahni for the Interview.

Claim Rejections - 35 U.S.C. §102

Claims 1-6, 8-15 and 17-19

Claims 1-6, 8-15 and 17-19 are rejected under pre-AIA 35 U.S.C. 102(a) as being anticipated by Galasso et al. (U.S. Patent Pub. No. 2012/0080279), hereinafter "Galasso". Applicant respectfully points out that amended Claim 1 (and similarly Claims 10 and 18) recites (emphasis added as to relevant amended language):

> An air bleed system assembly comprising:
> a lower fork, said lower fork configured to have a first end coupled to a vehicle wheel, and a second end telescopically engaged with a first end of an upper fork;
> a fluid passage disposed between an interior of said lower fork and an exterior of said lower fork; and
> a manually operable valve located in said lower fork, said manually operable valve having a first position substantially closing said fluid passage and a second position allowing a fluid to flow between said interior and said exterior, wherein said fluid passage and said manually operable valve are located at a distance from an oil bath lubrication within said lower fork, such that when said manually operable valve is in said second position, most, if not all of said oil bath lubrication remains within said lower fork and such that when trapped air pressure inside said lower fork, that is higher than a local ambient air pressure outside of said

suspension fork or shock absorber, is relieved most, if not all of said oil bath lubrication that is within said lower fork remains within said lower fork.

Applicant does not understand Galasso to anticipate the features of newly amended independent Claims 1, 10 and 18. e.g., "An air bleed system assembly comprising: a lower fork, said lower fork configured to have a first end coupled to a vehicle wheel, and a second end telescopically engaged with a first end of an upper fork; a fluid passage disposed between an interior of said lower fork and an exterior of said lower fork". Applicant further does not find Galasso to teach or suggest "a manually operable valve located in said lower fork, said manually operable valve having a first position substantially closing said fluid passage and a second position allowing a fluid to flow between said interior and said exterior, wherein said fluid passage and said manually operable valve are located at a distance from an oil bath lubrication within said lower fork, such that when said manually operable valve is in said second position, most, if not all of said oil bath lubrication remains within said lower fork and such that when trapped air pressure inside said lower fork, that is higher than a local ambient air pressure outside of said suspension fork or shock absorber, is relieved most, if not all of said oil bath lubrication that is within said lower fork remains within said lower fork."

Applicant understands Galasso to disclose "METHODS AND APPARATUS FOR SAG ADJUSTMENT" (Galasso, Title) in which an "integrated damper/gas spring shock absorber includes a bleed port located at a position on a gas spring cylinder corresponding to a desired sag setting" (Galasso, Abstract). Galasso provides techniques for easily adjusting an amount of preload applied to a spring in a shock absorber. (Galasso, paragraph [0007].)

Therefore, Applicant respectfully submit that since Galasso does not anticipate the features as set forth in independent Claims 1, 10 and 18; Claims 1, 10 and 18 traverse the rejection under 35 U.S.C. §102(a) and are in condition for allowance.

MPEP §2131 provides: "A claim is anticipated only if each and every element as set forth in the claim is found, either expressly or inherently described, in a single prior art reference". MPEP §2131; *Verdegaal Bros. v. Union Oil Co. of California*, 814 F.2d 628, 631, 2 USPQ2d 1051, 103 (Fed. Cir. 1987). ... "The identical invention must be shown in as complete detail as is contained in the ... claim." *Richardson v. Suzuki Motor Co.*, 868 F.2d 1226, 1236, 9 USPQ2d 1913, 1920 (Fed. Cir. 1989). "The elements must be arranged as required by the claim..." *In re Bond*, 910 F.2d 831, 15 USPQ2d 1913, 1920 (Fed. Cir. 1989).

Accordingly, Applicant respectfully submits that Claims 2-9 and 11-15 are also in condition for allowance as pending from allowable base Claims 1 and 10 and reciting additional features thereof.

Claims 18 and 19

Claims 18 and 19 are rejected under pre-AIA 35 U.S.C. 102(a) as being anticipated by Larsson et al. (U.S. Patent No. 7,255,210). Applicant respectfully points out that newly amended Claim 18 (from which Claim 19 depends) recites (emphasis added as to relevant amended language):

A lower fork and air bleed system assembly comprising:

a lower fork of a suspension, said lower fork configured to have a first end coupled to an axle of a vehicle wheel, and a second end telescopically engaged with a first end of an upper fork;

a fluid passage disposed between an interior of said lower fork and an exterior of said lower fork; and

a manually operable valve located in said lower fork, said manually operable valve having a first position substantially closing said fluid passage and a second position allowing a fluid to flow between said interior and said exterior of said lower fork.

Applicant does not understand Larsson to anticipate the features of newly amended independent Claim 18. e.g., "A lower fork and air bleed system assembly comprising: a lower fork of a suspension, said lower fork configured to have a first end coupled to an axle of a vehicle wheel, and a second end telescopically engaged with a first end of an upper fork; a fluid passage disposed between an interior of said lower fork and an exterior of said lower fork". Applicant further does not find Larsson to teach or suggest "a manually operable valve located in said lower fork, said manually operable valve having a first position substantially closing said fluid passage and a second position allowing a fluid to flow between said interior and said exterior of said lower fork."

Claim Rejections - 35 U.S.C. §103(a)

The instant Office Action argues that Claims 7 and 16 are rejected under 35 U.S.C. § 103(a) as being rendered obvious over Galasso in view of Hiramoto et al. (5,697,477), hereinafter "Hiramoto".

For the reasons provided above, Applicant respectfully submits that Claims 1 and 10 (from which Claims 7 and 16 depend, respectively) are in condition for allowance. Moreover, the addition of the Hiramoto reference does not teach or render obvious the features of Claims 1 and 10, e.g., "An air bleed system assembly comprising: a lower fork, said lower fork configured to have a first end coupled to a vehicle wheel, and a second end telescopically engaged with a first end of an upper fork; a fluid passage disposed between an interior of said lower fork and an exterior of said lower fork". Applicant further does not find Hiramoto, alone or in combination with Galasso, to teach or suggest "a manually operable valve located in lower fork, said manually operable valve having a first position substantially closing said fluid passage and a second position allowing a fluid to flow between said interior and said exterior, wherein said fluid passage and said manually operable valve are located at a distance from an oil bath lubrication within said lower fork, such that when said manually operable valve is in said second position, most, if not all of said oil bath lubrication remains within said lower fork and such that when trapped air pressure inside said lower fork, that is higher than a local ambient air pressure outside of said suspension fork or shock absorber, is relieved most, if not all of said oil bath lubrication that is within said lower fork remains within said lower fork."

Therefore, Applicant respectfully submits that Claims 1 and 10 traverse the rejection under 35 U.S.C. §103(a) and are in condition for allowance. Accordingly, Applicant respectfully submits that Claims 7 and 16 are also in condition for allowance as pending from allowable base Claims 1 and 10, respectively, and also for reciting additional features thereof.

New Claims

Claim 20 depends from Claim 1 which is patentable for the reasons provided herein. Therefore, Applicant respectfully submits that New Claim 20 is patentable over the applied references, whether taken alone or in any reasonable combination, for at least the reasons set forth above with respect to Claim 1.

Claim 21 depends from Claim 10 which is patentable for the reasons provided herein. Therefore, Applicant respectfully submits that New Claim 21 is patentable over the applied references, whether taken alone or in any reasonable combination, for at least the reasons set forth above with respect to Claim 10.

Claim 22 depends from Claim 18 which is patentable for the reasons provided herein. Therefore, Applicant respectfully submits that New Claim 22 is patentable over the applied references, whether taken alone or in any reasonable combination, for at least the reasons set forth above with respect to Claim 18.

CONCLUSION

Based on the amendments and arguments presented above, Applicant respectfully asserts that Claims 1-16, 18 and 19 overcome the rejection of record and, therefore, Applicant respectfully solicits allowance of these Claims.

The Examiner is invited to contact Applicant's undersigned representative if the Examiner believes such action would expedite resolution of the present Application.

In the event this paper is not timely filed, Applicant petitions for an appropriate extension of time. The Director is hereby authorized to charge any fees under 37 CFR 1.16 and 1.17 which may be required by this paper to Deposit Account No. 50-4157 with reference to Docket No. FOX-P5-08-12-US.CON.

Respectfully submitted,

WAGNER BLECHER LLP

Dated: 11/16/2016

/John P. Wagner, Jr./

John P. Wagner, Jr.
Registration No. 35,398

123 Westridge Dr.
Watsonville, Ca 95076
(408) 377-0500

Electronic Acknowledgement Receipt	
EFS ID:	27535950
Application Number:	14822859
International Application Number:	
Confirmation Number:	6345
Title of Invention:	METHOD AND APPARATUS FOR AN ADJUSTABLE DAMPER
First Named Inventor/Applicant Name:	William M. Becker
Customer Number:	70408
Filer:	John Paul Wagner Jr./Robert Condon
Filer Authorized By:	John Paul Wagner Jr.
Attorney Docket Number:	FOX-P5-08-12-US.CON
Receipt Date:	16-NOV-2016
Filing Date:	10-AUG-2015
Time Stamp:	19:14:33
Application Type:	Utility under 35 USC 111(a)

Payment information:

Submitted with Payment	no

File Listing:

Document Number	Document Description	File Name	File Size(Bytes)/ Message Digest	Multi Part /.zip	Pages (if appl.)
1		FOX-P5-08-12-USCON_20161116_RESP.pdf	194397 0f6d940f3713760cbfee1c264daf92e062f9bf50	yes	16

	Multipart Description/PDF files in .zip description		
	Document Description	**Start**	**End**
	Transmittal Letter	1	1
	Amendment/Req. Reconsideration-After Non-Final Reject	2	2
	Claims	3	9
	Applicant Arguments/Remarks Made in an Amendment	10	16
Warnings:			
Information:			
	Total Files Size (in bytes):	194397	

This Acknowledgement Receipt evidences receipt on the noted date by the USPTO of the indicated documents, characterized by the applicant, and including page counts, where applicable. It serves as evidence of receipt similar to a Post Card, as described in MPEP 503.

New Applications Under 35 U.S.C. 111
If a new application is being filed and the application includes the necessary components for a filing date (see 37 CFR 1.53(b)-(d) and MPEP 506), a Filing Receipt (37 CFR 1.54) will be issued in due course and the date shown on this Acknowledgement Receipt will establish the filing date of the application.

National Stage of an International Application under 35 U.S.C. 371
If a timely submission to enter the national stage of an international application is compliant with the conditions of 35 U.S.C. 371 and other applicable requirements a Form PCT/DO/EO/903 indicating acceptance of the application as a national stage submission under 35 U.S.C. 371 will be issued in addition to the Filing Receipt, in due course.

New International Application Filed with the USPTO as a Receiving Office
If a new international application is being filed and the international application includes the necessary components for an international filing date (see PCT Article 11 and MPEP 1810), a Notification of the International Application Number and of the International Filing Date (Form PCT/RO/105) will be issued in due course, subject to prescriptions concerning national security, and the date shown on this Acknowledgement Receipt will establish the international filing date of the application.

WAGNER BLECHER LLP
123 Westridge Drive
Watsonville, CA 95076
(408) 377-0500

PATENT APPLICATION

ATTORNEY DOCKET NO. FOX-P5-08-12-US.CON

Inventor(s): William BECKER

Confirmation No.: 6345

Application No.: 14/822,859

Examiner: Vishal R. SAHNI

Filing Date: August 10, 2015

Group Art Unit: 3657

Title: METHOD AND APPARATUS FOR AN ADJUSTABLE DAMPER

Mail Stop Amendment
Commissioner For Patents
PO Box 1450
Alexandria, VA 22313-1450

TRANSMITTAL LETTER FOR RESPONSE/AMENDMENT

Transmitted herewith is/are the following in the above-identified application:

- [x] Response/Amendment
- [ ] New fee as calculated below
- [x] No additional fee
- [ ] Other _____
- [ ] Petition to extend time to respond
- [ ] Supplemental Declaration

Fee$ 0

CLAIMS AS AMENDED BY OTHER THAN A SMALL ENTITY						
(1) FOR	(2) CLAIMS REMAINING AFTER AMENDMENT	(3) NUMBER EXTRA	(4) HIGHEST NUMBER PREVIOUSLY PAID FOR	(5) PRESENT EXTRA	(6) RATE	(7) ADDITIONAL FEES
TOTAL CLAIMS	20	MINUS	20	= 0	X $80	$ 0
INDEP. CLAIMS	3	MINUS	3	= 0	X $420	$ 0
[ ] FIRST PRESENTATION OF A MULTIPLE DEPENDENT CLAIM					+ $780	$ 0
EXTENSION FEE	[ ] 1st Month $200	[ ] 2nd Month $600	[ ] 3rdMonth $1,400	[ ] 4th Month $2,200		$ 0
OTHER FEES						$ 0
TOTAL ADDITIONAL FEE FOR THIS AMENDMENT						$ 0

Please charge Deposit Account 50-4157 the sum of $ 0. At any time during the pendency of this application, please charge any fees required or credit any over payment to Deposit Account 50-4157 pursuant to 37 CFR 1.25. Additionally charge any fees to Deposit Account 50-4157 under 37 CFR 1.16 through 1.21 inclusive, and any other sections in Title 37 of the Code of Federal Regulations that may regulate fees. A duplicate copy of this sheet is enclosed.

[ ] I hereby certify that this correspondence is being deposited with the United States Postal Service as first class mail in an envelope addressed to: Commissioner for Patents, Alexandria, VA 22313-1450

Date of Deposit:

OR

[x] I hereby certify that this paper is being transmitted to the Patent and Trademark Office facsimile number (571)273-8300 or via Electronic Filing.

Date of facsimile/transmission: 11/16/2016

Typed Name: Robert Condon

Signature: /Robert Condon/

Respectfully submitted,
Fox Factory, Inc.

By /John P. Wagner, Jr./

John P. Wagner, Jr.

Attorney/Agent for Applicant(s)

Reg No. : 35,398

Date : 11/16/2016

Telephone : 408-377-0500

PTO/SB/06 (09-11)
Approved for use through 1/31/2014. OMB 0651-0032
U.S. Patent and Trademark Office; U.S. DEPARTMENT OF COMMERCE
Under the Paperwork Reduction Act of 1995, no persons are required to respond to a collection of information unless it displays a valid OMB control number.

PATENT APPLICATION FEE DETERMINATION RECORD Substitute for Form PTO-875	Application or Docket Number 14/822,859	Filing Date 08/10/2015	☐ To be Mailed

ENTITY: ☒ LARGE ☐ SMALL ☐ MICRO

APPLICATION AS FILED – PART I

FOR	(Column 1) NUMBER FILED	(Column 2) NUMBER EXTRA	RATE ($)	FEE ($)
☒ BASIC FEE (37 CFR 1.16(a), (b), or (c))	N/A	N/A	N/A	**280**
☐ SEARCH FEE (37 CFR 1.16(k), (i), or (m))	N/A	N/A	N/A	
☐ EXAMINATION FEE (37 CFR 1.16(o), (p), or (q))	N/A	N/A	N/A	
TOTAL CLAIMS (37 CFR 1.16(i))	minus 20 =	*	X $ =	
INDEPENDENT CLAIMS (37 CFR 1.16(h))	minus 3 =	*	X $ =	
☐ APPLICATION SIZE FEE (37 CFR 1.16(s))	If the specification and drawings exceed 100 sheets of paper, the application size fee due is $310 ($155 for small entity) for each additional 50 sheets or fraction thereof. See 35 U.S.C. 41(a)(1)(G) and 37 CFR 1.16(s).			
☐ MULTIPLE DEPENDENT CLAIM PRESENT (37 CFR 1.16(j))				
* If the difference in column 1 is less than zero, enter "0" in column 2.			TOTAL	**280**

APPLICATION AS AMENDED – PART II

AMENDMENT

11/16/2016	(Column 1) CLAIMS REMAINING AFTER AMENDMENT		(Column 2) HIGHEST NUMBER PREVIOUSLY PAID FOR	(Column 3) PRESENT EXTRA	RATE ($)	ADDITIONAL FEE ($)
Total (37 CFR 1.16(i))	* 20	Minus	** 20	= 0	X $80 =	0
Independent (37 CFR 1.16(h))	* 3	Minus	***3	= 0	X $420 =	0
☐ Application Size Fee (37 CFR 1.16(s))						
☐ FIRST PRESENTATION OF MULTIPLE DEPENDENT CLAIM (37 CFR 1.16(j))						
					TOTAL ADD'L FEE	**0**

AMENDMENT

	(Column 1) CLAIMS REMAINING AFTER AMENDMENT		(Column 2) HIGHEST NUMBER PREVIOUSLY PAID FOR	(Column 3) PRESENT EXTRA	RATE ($)	ADDITIONAL FEE ($)
Total (37 CFR 1.16(i))	*	Minus	**	=	X $ =	
Independent (37 CFR 1.16(h))	*	Minus	***	=	X $ =	
☐ Application Size Fee (37 CFR 1.16(s))						
☐ FIRST PRESENTATION OF MULTIPLE DEPENDENT CLAIM (37 CFR 1.16(j))						
					TOTAL ADD'L FEE	

* If the entry in column 1 is less than the entry in column 2, write "0" in column 3.
** If the "Highest Number Previously Paid For" IN THIS SPACE is less than 20, enter "20".
*** If the "Highest Number Previously Paid For" IN THIS SPACE is less than 3, enter "3".
The "Highest Number Previously Paid For" (Total or Independent) is the highest number found in the appropriate box in column 1.

LIE
GWENDOLYN MYERS

This collection of information is required by 37 CFR 1.16. The information is required to obtain or retain a benefit by the public which is to file (and by the USPTO to process) an application. Confidentiality is governed by 35 U.S.C. 122 and 37 CFR 1.14. This collection is estimated to take 12 minutes to complete, including gathering, preparing, and submitting the completed application form to the USPTO. Time will vary depending upon the individual case. Any comments on the amount of time you require to complete this form and/or suggestions for reducing this burden, should be sent to the Chief Information Officer, U.S. Patent and Trademark Office, U.S. Department of Commerce, P.O. Box 1450, Alexandria, VA 22313-1450. DO NOT SEND FEES OR COMPLETED FORMS TO THIS ADDRESS. **SEND TO: Commissioner for Patents, P.O. Box 1450, Alexandria, VA 22313-1450.**
If you need assistance in completing the form, call 1-800-PTO-9199 and select option 2.

UNITED STATES PATENT AND TRADEMARK OFFICE

UNITED STATES DEPARTMENT OF COMMERCE
United States Patent and Trademark Office
Address: COMMISSIONER FOR PATENTS
P.O. Box 1450
Alexandria, Virginia 22313-1450
www.uspto.gov

APPLICATION NO.	FILING DATE	FIRST NAMED INVENTOR	ATTORNEY DOCKET NO.	CONFIRMATION NO.
14/822,859	08/10/2015	William M. Becker	FOX-P5-08-12-US.CON	6345

70408 7590 12/02/2016
FOX C/O WAGNER BLECHER LLP
123 WESTRIDGE DRIVE
WATSONVILLE, CA 95076

EXAMINER
SAHNI, VISHAL R

ART UNIT	PAPER NUMBER
3657	

NOTIFICATION DATE	DELIVERY MODE
12/02/2016	ELECTRONIC

Please find below and/or attached an Office communication concerning this application or proceeding.

The time period for reply, if any, is set in the attached communication.

Notice of the Office communication was sent electronically on above-indicated "Notification Date" to the following e-mail address(es):

patents@wagnerblecher.com

PTOL-90A (Rev. 04/07)

Office Action Summary	Application No. 14/822,859	Applicant(s) BECKER, WILLIAM M.	
	Examiner VISHAL SAHNI	Art Unit 3657	AIA (First Inventor to File) Status No

-- The MAILING DATE of this communication appears on the cover sheet with the correspondence address --

Period for Reply

A SHORTENED STATUTORY PERIOD FOR REPLY IS SET TO EXPIRE 3 MONTHS FROM THE MAILING DATE OF THIS COMMUNICATION.

- Extensions of time may be available under the provisions of 37 CFR 1.136(a). In no event, however, may a reply be timely filed after SIX (6) MONTHS from the mailing date of this communication.
- If NO period for reply is specified above, the maximum statutory period will apply and will expire SIX (6) MONTHS from the mailing date of this communication.
- Failure to reply within the set or extended period for reply will, by statute, cause the application to become ABANDONED (35 U.S.C. § 133). Any reply received by the Office later than three months after the mailing date of this communication, even if timely filed, may reduce any earned patent term adjustment. See 37 CFR 1.704(b).

Status

1)☒ Responsive to communication(s) filed on *11/16/16*.

☐ A declaration(s)/affidavit(s) under **37 CFR 1.130(b)** was/were filed on _____.

2a)☒ This action is **FINAL**. 2b)☐ This action is non-final.

3)☐ An election was made by the applicant in response to a restriction requirement set forth during the interview on _____; the restriction requirement and election have been incorporated into this action.

4)☐ Since this application is in condition for allowance except for formal matters, prosecution as to the merits is closed in accordance with the practice under *Ex parte Quayle*, 1935 C.D. 11, 453 O.G. 213.

Disposition of Claims*

5)☒ Claim(s) *1,3-16 and 18-22* is/are pending in the application.

5a) Of the above claim(s) _____ is/are withdrawn from consideration.

6)☐ Claim(s) _____ is/are allowed.

7)☒ Claim(s) *1,3-16 and 18-22* is/are rejected.

8)☐ Claim(s) _____ is/are objected to.

9)☐ Claim(s) _____ are subject to restriction and/or election requirement.

* If any claims have been determined allowable, you may be eligible to benefit from the **Patent Prosecution Highway** program at a participating intellectual property office for the corresponding application. For more information, please see http://www.uspto.gov/patents/init_events/pph/index.jsp or send an inquiry to PPHfeedback@uspto.gov.

Application Papers

10)☐ The specification is objected to by the Examiner.

11)☐ The drawing(s) filed on _____ is/are: a)☐ accepted or b)☐ objected to by the Examiner.

Applicant may not request that any objection to the drawing(s) be held in abeyance. See 37 CFR 1.85(a).

Replacement drawing sheet(s) including the correction is required if the drawing(s) is objected to. See 37 CFR 1.121(d).

Priority under 35 U.S.C. § 119

12)☐ Acknowledgment is made of a claim for foreign priority under 35 U.S.C. § 119(a)-(d) or (f).

Certified copies:

a)☐ All b)☐ Some** c)☐ None of the:

1.☐ Certified copies of the priority documents have been received.

2.☐ Certified copies of the priority documents have been received in Application No. _____.

3.☐ Copies of the certified copies of the priority documents have been received in this National Stage application from the International Bureau (PCT Rule 17.2(a)).

** See the attached detailed Office action for a list of the certified copies not received.

Attachment(s)

1) ☒ Notice of References Cited (PTO-892)

2) ☐ Information Disclosure Statement(s) (PTO/SB/08a and/or PTO/SB/08b) Paper No(s)/Mail Date _____.

3) ☐ Interview Summary (PTO-413) Paper No(s)/Mail Date. _____ .

4) ☐ Other: _____.

DETAILED ACTION

The Amendment filed 11/16/16 has been entered. Claims 1, 3-16 and 18-22 are currently pending. Claim 2 has been cancelled and claims 20-22 are newly added. Despite the claim amendments and Arguments, revised rejections are detailed below. The present application is being examined under the pre-AIA first to invent provisions.

Claim Rejections - 35 USC § 102

The following is a quotation of the appropriate paragraphs of pre-AIA 35 U.S.C. 102 that form the basis for the rejections under this section made in this Office action:

> A person shall be entitled to a patent unless –
>
> (b) the invention was patented or described in a printed publication in this or a foreign country or in public use or on sale in this country, more than one year prior to the date of application for patent in the United States.

REJECTION #1: *Larsson*

Claims 18 and 19 are rejected under pre-AIA 35 U.S.C. 102(a) as being anticipated by Larsson et al. (U.S. Patent No. 7,255,210). Larsson is directed to a telescopic fork leg for a vehicle. See Abstract.

Claim 18: Larsson discloses an air bleed system [Figs. 2-5; col. 1, line 24 ("gas")] comprising: a lower fork of a suspension [see Figs. 1A, 1B], said lower fork configured to have a first end coupled to an axle of a vehicle wheel, and a second end telescopically engaged with a first end of an upper fork; a fluid passage (13, 22) disposed between an interior of said lower fork and an exterior of the lower fork; and a manually operable valve (14) located in said lower fork, said manually operable valve having a first position substantially closing said fluid passage and a second position

allowing a fluid to flow between said interior and said exterior of said lower fork. See col. 2, line 27 ("adjustable bleed needle function"); Figs. 2-5.

Claim 19: Larsson discloses that said manually operable valve is located proximate to an upper end of the lower fork. See Figs. 2-5.

Claim Rejections - 35 USC § 103

The following is a quotation of pre-AIA 35 U.S.C. 103(a) which forms the basis for all obviousness rejections set forth in this Office action:

> (a) A patent may not be obtained though the invention is not identically disclosed or described as set forth in section 102 of this title, if the differences between the subject matter sought to be patented and the prior art are such that the subject matter as a whole would have been obvious at the time the invention was made to a person having ordinary skill in the art to which said subject matter pertains. Patentability shall not be negatived by the manner in which the invention was made.

REJECTION #2: *Galasso in view of Julia*

Claims 1, 3-6, 8-15 and 18-22 are rejected under pre-AIA 35 U.S.C. 103(a) as being unpatentable over Galasso et al. (U.S. Patent Pub. No. 2012/0080279) (previously cited) in view of Julia (U.S. Patent No. 6,311,961. Galasso is directed to a method and apparatus for sag adjustment. See Abstract. Julia is directed to a hydro-pneumatic suspension unit for land-vehicles. See Abstract.

Claim 1: Galasso discloses an air bleed system assembly [see Figs. 2-4] comprising: a lower fork (210), said lower fork configured to have a first end coupled to a vehicle wheel, and a second end telescopically engaged with a first end of an upper fork (220); a fluid passage (224, 424-2) disposed between an interior (inside 210) of said lower fork and an exterior (outside 210) of said lower fork; and a manually operable valve (214, 314, 414, 470) [see para. 0037 (either a "rotary sleeve" and/or a "bleed

valve" such as a Schrader-type valve)] located in said lower fork [note: Julia reference, discussed *infra*, explains that "lower" is a relative term], said manually operable valve having a first position substantially closing said fluid passage [see, e.g., Fig. 2 (when 236 covers 224)] and a second position allowing a fluid to flow between said interior and said exterior [see, e.g., Fig. 2 (when 214 is screwed upward such that 224 is open)]. See Figs. 2-4.

Galasso further discloses that said fluid passage and said manually operable valve are located at a distance from an oil bath lubrication (272) within said lower fork, such that when said manually operable valve is in said second position, most, if not all, of said oil bath lubrication remains within said lower fork and such that when trapped air pressure inside said lower fork that is higher than a local ambient pressure outside of said suspension fork or shock absorber is relieved, most, if not all, of said oil bath lubrication that is within in said lower fork remains within said lower fork. See Figs. 2-4.

Galasso discloses all the limitations of this claim, although arguably does not disclose the new limitation of a "lower fork configured to [be] coupled to a vehicle wheel." First, it should be noted that while the Galasso cylinder 210 is located above cylinder 220 in the figures, the term “lower” is relative and the device may be inverted. Second, the claim uses broad "configured to" language, thus so long as cylinder 201 is capable of being coupled to a vehicle wheel (which it is, via mounting element 204), the limitation is properly met. Regardless, Julia reiterates the above points and indicates that it is known to those with ordinary skill in the art: "[r]eference to 'upper' and 'lower' is simply for convenience in regard to the drawing figures; it being understood that the

suspension units may just as well be mounted upside-down." See col. 4, lines 41-45. Furthermore, Julia discloses the use of a manually operable valve (41, 45) [see col. 5, lines 51-64 (valve may be "selectively opened and closed" to bleed air pressure)] in the lower fork of a suspension unit to release pressurized air from the lower fork [see Figs. 4, 5 (at 35)] without losing any of the oil bath lubrication in the oil fork [see Figs. 4, 5 (at 33)]. It would be obvious to a person having ordinary skill in the art at the time of the invention to mount the Galasso shock absorber "upside-down" because it is known that these units have mounting means on both ends and ultimately perform (at least some form of) damping upon compression of the two telescopic cylinders, regardless of their orientation along the same axis.

Claim 3: Galasso discloses that said fluid comprises: a gas. See Abstract.

Claim 4: Galasso discloses a valve activator (threads of 214, 314, 414 or pin of Schrader-type 470) coupled with said manually operable valve, said valve activator comprising: an activation position [see, e.g., Fig. 2 (when 214 is screwed such that 236 covers 224)] placing said manually operable valve into said first position; and a deactivation position [see, e.g., Fig. 2 (when 214 is screwed upward such that 224 is open)] placing said manually operable valve into said second position, and whereupon when in said activation position, the trapped air pressure in said lower fork is equalized with the local ambient air pressure. See Figs. 2-4.

Claim 5: Galasso discloses that said valve activator comprises: a button (pin of 470) to select said activation and said deactivation positions. See Fig. 4 (pin of Schrader-type valve 470 pushed to open or close bleed port 468).

Claim 6: Galasso discloses said valve activator is positioned on a feature of said suspension. See Figs. 2-4. The fact that this “feature” is die-cast is a method of making, not a structural limitation. Also, it does not appear that this “feature” is part of the claimed apparatus, but part of the larger suspension for which this system is employed.

Claim 8: Galasso discloses said manually operable valve comprises: a spring (328) coupled with said valve activator, whereupon when said valve activator is moved into said deactivation position, said spring biases said valve activator toward said first position. See Fig. 3.

Claim 9: Galasso discloses that said second position comprises: a sealing engagement between said sealing o-ring (236) and a seal bore (224), wherein when in said sealing engagement, said trapped air pressure does not by-pass into or out of said lower fork. See Fig. 2.

Claim 10: Galasso discloses a fluid equalization system [see Figs. 2-4] comprising: a lower fork (210) configured to have a first end coupled to a vehicle wheel, and a second end telescopically engaged with a first end of an upper fork (220); a fluid flow path (224, 424-2) between a first region of said lower fork having a first pressure (inside 210) and a second region (outside 210) having a second pressure; and a valve member (214, 314, 414, 470) [see para. 0037 (either a “rotary sleeve" and/or a "bleed valve" such as a Schrader-type valve)] located in said lower fork, said valve member having a first position [see, e.g., Fig. 2 (when 236 covers 224)] substantially obstructing said flow path and a second position wherein said flow path is open [see, e.g., Fig. 2

(when 214 is screwed upward such that 224 is open)]. See Figs. 2-4 (note: "lower" is a relative term, aside from the fact that these are components of the fork or shock absorber, which is not being claimed here).

Galasso further discloses that said fluid flow path and said valve member are located at a distance from an oil bath lubrication (272) within said lower fork, such that when said valve member is in said second position, most, if not all, of said oil bath lubrication remains within said lower fork and such that when trapped air pressure inside said lower fork that is higher than a local ambient pressure outside of said suspension fork or shock absorber is relieved, most, if not all, of said oil bath lubrication that is within in said lower fork remains within said lower fork. See Figs. 2-4.

Galasso discloses all the limitations of this claim, although arguably does not disclose the new limitation of a "lower fork configured to [be] coupled to a vehicle wheel." First, it should be noted that while the Galasso cylinder 210 is located above cylinder 220 in the figures, the term "lower" is relative and the device may be inverted. Second, the claim uses broad "configured to" language, thus so long as cylinder 201 is capable of being coupled to a vehicle wheel (which it is, via mounting element 204), the limitation is properly met. Regardless, Julia reiterates the above points and indicates that it is known to those with ordinary skill in the art: "[r]eference to 'upper' and 'lower' is simply for convenience in regard to the drawing figures; it being understood that the suspension units may just as well be mounted upside-down." See col. 4, lines 41-45. Furthermore, Julia discloses the use of a manually operable valve (41, 45) [see col. 5, lines 51-64 (valve may be "selectively opened and closed" to bleed air pressure)] in the

lower fork of a suspension unit to release pressurized air from the lower fork [see Figs. 4, 5 (at 35)] without losing any of the oil bath lubrication in the oil fork [see Figs. 4, 5 (at 33)]. It would be obvious to a person having ordinary skill in the art at the time of the invention to mount the Galasso shock absorber “upside-down” because it is known that these units have mounting means on both ends and ultimately perform (at least some form of) damping upon compression of the two telescopic cylinders, regardless of their orientation along the same axis.

Galasso discloses all the limitations of this claim, although arguably does not disclose the new limitation of a "lower fork configured to [be] coupled to a vehicle wheel." First, it should be noted that while the Galasso cylinder 210 is located above cylinder 220 in the figures, the term “lower” is relative and the device may be inverted. Second, the claim uses broad "configured to" language, thus so long as cylinder 201 is capable of being coupled to a vehicle wheel (which it is, via mounting element 204), the limitation is properly met. Regardless, Julia reiterates the above points and indicates that it is known to those with ordinary skill in the art: "[r]eference to 'upper' and 'lower' is simply for convenience in regard to the drawing figures; it being understood that the suspension units may just as well be mounted upside-down." See col. 4, lines 41-45. Furthermore, Julia discloses the use of a manually operable valve (41, 45) [see col. 5, lines 51-64 (valve may be “selectively opened and closed” to bleed air pressure)] in the lower fork of a suspension unit to release pressurized air from the lower fork [see Figs. 4, 5 (at 35)] without losing any of the oil bath lubrication in the oil fork [see Figs. 4, 5 (at 33)]. It would be obvious to a person having ordinary skill in the art at the time of the

invention to mount the Galasso shock absorber "upside-down" because it is known that these units have mounting means on both ends and ultimately perform (at least some form of) damping upon compression of the two telescopic cylinders, regardless of their orientation.

Claim 11: Galasso discloses that said first region of said lower fork having said first pressure is one of an interior of said suspension fork or shock absorber and an exterior of said suspension fork or shock absorber. See Fig. 2.

Claim 12: Galasso discloses that said second region having said second pressure is one of an interior of said lower fork and an exterior of said lower fork. See Fig. 2.

Claim 13: Galasso discloses that said first position comprises: a sealing o-ring (336-2) partially enclosed by a valve activator (314); and a spring (328), said sealing o-ring comprising: a sealed position [see Fig. 3 (336-2 at 224)], wherein when in said sealed position, said spring biases said valve activator toward a closed position and said sealing o-ring presses against a sealing bore (224) such that air pressure does not pass into or out of said lower fork. See Fig. 3.

Claim 14: Galasso discloses that said valve activator comprises: a button (either 214 or 470) configured for being pressed for activation or deactivation. See Figs. 2-4.

Claim 15: see claim 6 above.

Claim 18: Galasso discloses a lower fork and air bleed system [Figs. 2-4] comprising: a lower fork suspension (210), said lower fork configured to have a first end coupled to an axle of a vehicle wheel, and a second end telescopically engaged with a

first end of an upper fork (220); a fluid passage (224, 424-2) disposed between an interior of the lower fork and an exterior of the lower fork; and a manually operable valve (214, 314, 414, 470) [see para. 0037 (either a “rotary sleeve" and/or a "bleed valve" such as a Schrader-type valve)] located in the lower fork, said manually operable valve having a first position [see, e.g., Fig. 2 (when 236 covers 224)] substantially closing said fluid passage and a second position allowing a fluid to flow between said interior and said exterior of the lower fork [see, e.g., Fig. 2 (when 214 is screwed upward such that 224 is open)]. See Figs. 2-4 (note: “lower” is a relative term, aside from the fact that these are components of the fork or shock absorber, which is not being claimed here).

Galasso discloses all the limitations of this claim, although arguably does not disclose the new limitation of a "lower fork configured to [be] coupled to a vehicle wheel." First, it should be noted that while the Galasso cylinder 210 is located above cylinder 220 in the figures, the term “lower” is relative and the device may be inverted. Second, the claim uses broad "configured to" language, thus so long as cylinder 201 is capable of being coupled to a vehicle wheel (which it is, via mounting element 204), the limitation is properly met. Regardless, Julia reiterates the above points and indicates that it is known to those with ordinary skill in the art: "[r]eference to 'upper' and 'lower' is simply for convenience in regard to the drawing figures; it being understood that the suspension units may just as well be mounted upside-down." See col. 4, lines 41-45. Furthermore, Julia discloses the use of a manually operable valve (41, 45) [see col. 5, lines 51-64 (valve may be “selectively opened and closed” to bleed air pressure)] in the lower fork of a suspension unit to release pressurized air from the lower fork [see Figs.

4, 5 (at 35)] without losing any of the oil bath lubrication in the oil fork [see Figs. 4, 5 (at 33)]. It would be obvious to a person having ordinary skill in the art at the time of the invention to mount the Galasso shock absorber "upside-down" because it is known that these units have mounting means on both ends and ultimately perform (at least some form of) damping upon compression of the two telescopic cylinders, regardless of their orientation along the same axis.

Claim 19: Galasso discloses that said manually operable valve is located proximate to an upper end of the lower fork. See Figs. 2-4.

Claims 20-22: Galasso discloses that said fluid passage is further located between a lower leg seal of said lower fork and an upper bushing of said lower fork. See Figs. 2-4 (numerous seals/bushings in 210 may be selected to meet this limitation).

REJECTION #2: *Galasso in view of Julia and Hiramoto*

Claims 7 and 16 are rejected under pre-AIA 35 U.S.C. 103(a) as being unpatentable over Galasso in view of Julia and Hiramoto et al. (U.S. Patent No. 5,697,477) (previously cited). Hiramoto is directed to an air damper. See Abstract.

Claim 7: Galasso and Julia are relied upon as in claim 1 above. Galasso further discloses a diametrical recess (224) and a sealing o-ring (236) with a sealed and unsealed position. See Fig. 2. However, in Galasso the unsealed position is attained when the o-ring moves *out of* the diametrical recess rather than "*into* said diametrical recess.

Hiramoto discloses a diametrical recess (52); and a sealing o-ring (42) comprising: a sealed position [Fig. 5]; and an unsealed position [Fig. 4], wherein said

sealed position seals the system, whereupon said activation, said sealing o-ring moves into said diametrical recess, thereby attaining said unsealed position and letting air pressure by-pass into or out of said system via a vent hole. See Figs. 4, 5. It would have been obvious to a person having ordinary skill in the art at the time of the invention to modify Galasso in this manner because the sealing o-ring can either be moved into a recess to attain a sealed position or an unseal position, so it would have been obvious to try one of these two options.

Claim 16: Galasso is relied upon as in claim 10 above. This limitation is addressed in claim 7 above. See obviousness statement above.

Response to Arguments

Applicant's arguments with respect to claims 1, 3-16 and 18-22 have been considered but are not persuasive.

With regard to the section 102 rejection of claims 18 and 19 due to the Larsson reference, Applicant recites the newly added limitations and then simply states that Larsson does not disclose them. See Remarks, pages 11-12. Conclusory statements are not persuasive. Once again, claim 18 in particular is very broad and should be significantly narrowed (or cancelled) to move prosecution forward.

With regard to the 102 rejection of all pending claims due to Galasso, this rejection has been modified to a section 103 rejection in view of the new teaching reference, Julia. The 102 rejection could have been maintained because the cylinder 210 on top in Figs. 2-5 may be considered a "lower fork" that may be coupled to a wheel axle. But for the sake of completeness, Julia is offered as a teaching reference to indicate that: (1) "'upper' and 'lower' is simply for convenience in regard to the drawing figures; it being understood that the suspension units may just as well be mounted upside-down" [see col. 4, lines 41-45]; and (2) a manually operable air bleeding valve may be located in the lower fork without compromising the oil bath in the lower fork [see col. 5, lines 51-64]. Clarifying amendments are required here regarding the specific utility of the invention.

For the foregoing reasons, all pending claims remain rejected as detailed above.

Conclusion

Applicant's amendment necessitated the new ground(s) of rejection presented in this Office action. Accordingly, **THIS ACTION IS MADE FINAL**. See MPEP § 706.07(a). Applicant is reminded of the extension of time policy as set forth in 37 CFR 1.136(a).

A shortened statutory period for reply to this final action is set to expire THREE MONTHS from the mailing date of this action. In the event a first reply is filed within TWO MONTHS of the mailing date of this final action and the advisory action is not mailed until after the end of the THREE-MONTH shortened statutory period, then the shortened statutory period will expire on the date the advisory action is mailed, and any extension fee pursuant to 37 CFR 1.136(a) will be calculated from the mailing date of the advisory action. In no event, however, will the statutory period for reply expire later than SIX MONTHS from the date of this final action.

Any inquiry concerning this communication or earlier communications from the examiner should be directed to VISHAL SAHNI whose telephone number is (571)270-3838. The examiner can normally be reached on Monday - Friday 8:30-5.

If attempts to reach the examiner by telephone are unsuccessful, the examiner's supervisor, Robert Siconolfi can be reached on (571) 272-7124. The fax phone number for the organization where this application or proceeding is assigned is 571-273-8300.

Information regarding the status of an application may be obtained from the Patent Application Information Retrieval (PAIR) system. Status information for published applications may be obtained from either Private PAIR or Public PAIR. Status information for unpublished applications is available through Private PAIR only. For more information about the PAIR system, see http://pair-direct.uspto.gov. Should you have questions on access to the Private PAIR system, contact the Electronic Business Center (EBC) at 866-217-9197 (toll-free). If you would like assistance from a USPTO Customer Service Representative or access to the automated information system, call 800-786-9199 (IN USA OR CANADA) or 571-272-1000.

/VISHAL SAHNI/
Primary Examiner, Art Unit 3657
November 20, 2016

Notice of References Cited	Application/Control No. 14/822,859	Applicant(s)/Patent Under Reexamination BECKER, WILLIAM M.	
	Examiner VISHAL SAHNI	Art Unit 3657	Page 1 of 1

U.S. PATENT DOCUMENTS

*		Document Number Country Code-Number-Kind Code	Date MM-YYYY	Name	CPC Classification	US Classification
*	A	US-6,311,961 B1	11-2001	Julia; Silvestre Edigio	B60G17/0416	188/313
	B	US-				
	C	US-				
	D	US-				
	E	US-				
	F	US-				
	G	US-				
	H	US-				
	I	US-				
	J	US-				
	K	US-				
	L	US-				
	M	US-				

FOREIGN PATENT DOCUMENTS

*		Document Number Country Code-Number-Kind Code	Date MM-YYYY	Country	Name	CPC Classification
	N					
	O					
	P					
	Q					
	R					
	S					
	T					

NON-PATENT DOCUMENTS

*		Include as applicable: Author, Title Date, Publisher, Edition or Volume, Pertinent Pages)
	U	
	V	
	W	
	X	

*A copy of this reference is not being furnished with this Office action. (See MPEP § 707.05(a).)
Dates in MM-YYYY format are publication dates. Classifications may be US or foreign.

Index of Claims	Application/Control No.	Applicant(s)/Patent Under Reexamination
	14822859	BECKER, WILLIAM M.
	Examiner	**Art Unit**
	VISHAL SAHNI	3657

✓	Rejected	-	Cancelled	N	Non-Elected	A	Appeal
=	Allowed	÷	Restricted	I	Interference	O	Objected

☐ Claims renumbered in the same order as presented by applicant ☐ CPA ☐ T.D. ☐ R.1.47

CLAIM		DATE								
Final	Original	09/28/2015	02/17/2016	08/09/2016	11/20/2016					
	1	✓	✓	✓	✓					
	2		✓	✓	-					
	3		✓	✓	✓					
	4		✓	✓	✓					
	5		✓	✓	✓					
	6		✓	✓	✓					
	7		✓	✓	✓					
	8		✓	✓	✓					
	9		✓	✓	✓					
	10		✓	✓	✓					
	11		✓	✓	✓					
	12		✓	✓	✓					
	13		✓	✓	✓					
	14		✓	✓	✓					
	15		✓	✓	✓					
	16		✓	✓	✓					
	17		✓	-	-					
	18			✓	✓					
	19			✓	✓					
					✓					
					✓					
					✓					

EAST Search History

EAST Search History (Prior Art)

Ref #	Hits	Search Query	DBs	Default Operator	Plurals	Time Stamp
S1	3	"20130134687"	US-PGPUB; USPAT; USOCR; FPRS; EPO; JPO; DERWENT; IBM_TDB	OR	OFF	2015/01/05 14:26
S2	2	"20130319805"	US-PGPUB; USPAT; USOCR; FPRS; EPO; JPO; DERWENT; IBM_TDB	OR	OFF	2015/01/05 14:39
S3	126	"188".clas. and fork and bleed and valve and spring	US-PGPUB; USPAT; USOCR; FPRS; EPO; JPO; DERWENT; IBM_TDB	OR	OFF	2015/01/05 14:54
S4	28	"188".clas. and fork.ab. and bleed and valve and spring	US-PGPUB; USPAT; USOCR; FPRS; EPO; JPO; DERWENT; IBM_TDB	OR	OFF	2015/01/05 14:55
S5	22	"188".clas. and fork and bleed and valve and spring and elevation	US-PGPUB; USPAT; USOCR; FPRS; EPO; JPO; DERWENT; IBM_TDB	OR	OFF	2015/01/05 15:03
S6	74	"188".clas. and bleed.ab. and valve and spring	US-PGPUB; USPAT; USOCR; FPRS; EPO; JPO; DERWENT; IBM_TDB	OR	OFF	2015/01/05 15:50
S7	11	(188/322.13,322.19-322.21.ccls. or 267/64.18,64.22,64.26.ccls.) and bleed.ab. and valve and spring	US-PGPUB; USPAT; USOCR; FPRS; EPO; JPO; DERWENT; IBM_TDB	OR	OFF	2015/01/05 15:57
S9	3	"188".clas. and seal and (diametrical adj	US-PGPUB;	OR	OFF	2015/01/05

		recess)	USPAT; USOCR; FPRS; EPO; JPO; DERWENT; IBM_TDB			16:34
S10	0	schrader and seal and (diametrical adj recess)	US-PGPUB; USPAT; USOCR; FPRS; EPO; JPO; DERWENT; IBM_TDB	OR	OFF	2015/01/05 16:35
S11	10	schrader and (seal near recess)	US-PGPUB; USPAT; USOCR; FPRS; EPO; JPO; DERWENT; IBM_TDB	OR	OFF	2015/01/05 16:36
S12	72	schrader and (seal near (mov$3 or adjust$3 or push$3 or shift$3))	US-PGPUB; USPAT; USOCR; FPRS; EPO; JPO; DERWENT; IBM_TDB	OR	OFF	2015/01/05 16:37
S13	1553	(o-ring near (mov$3 or adjust$3 or push$3 or shift$3))	US-PGPUB; USPAT; USOCR; FPRS; EPO; JPO; DERWENT; IBM_TDB	OR	OFF	2015/01/05 16:39
S14	34	(o-ring near (mov$3 or adjust$3 or push$3 or shift$3) near (open$3 or clos$3))	US-PGPUB; USPAT; USOCR; FPRS; EPO; JPO; DERWENT; IBM_TDB	OR	OFF	2015/01/05 16:39
S15	50	becker-william-m.in.	US-PGPUB; USPAT; USOCR; FPRS; EPO; JPO; DERWENT; IBM_TDB	OR	OFF	2015/01/05 20:59
S16	15	becker-william-m.in. and o-ring	US-PGPUB; USPAT; USOCR; FPRS; EPO; JPO; DERWENT; IBM_TDB	OR	OFF	2015/01/05 20:59
S17	25	(188/322.13,322.19-322.21.ccls. or 267/64.18,64.22,64.26.ccls.) and bleed and valve and spring and fork	US-PGPUB; USPAT; USOCR; FPRS; EPO; JPO; DERWENT;	OR	OFF	2015/03/27 12:01

			IBM_TDB			
S18	77	(F16F9/34,346,3465.cpc. or B62K2025/048.cpc.) and bleed and valve and spring and fork	US-PGPUB; USPAT; USOCR; FPRS; EPO; JPO; DERWENT; IBM_TDB	OR	OFF	2015/03/27 12:06
S19	13	(188/322.13,322.19-322.21.ccls. or 267/64.18,64.22,64.26.ccls.) and bleed.ab. and valve and spring	US-PGPUB; USPAT; USOCR; FPRS; EPO; JPO; DERWENT; IBM_TDB	OR	OFF	2015/03/27 12:06
S20	14	(F16F9/34,346,3465.cpc. or B62K2025/048.cpc.) and becker-william-m.in.	US-PGPUB; USPAT; USOCR; FPRS; EPO; JPO; DERWENT; IBM_TDB	OR	OFF	2015/03/27 12:08
S21	0	(fork and (air adj bleed) and gap and oil and damper and seal).clm.	US-PGPUB; USPAT; USOCR; FPRS; EPO; JPO; DERWENT; IBM_TDB	OR	OFF	2015/03/27 12:09
S22	0	(fork and (air and bleed) and gap and oil and damper and seal).clm.	US-PGPUB; USPAT; USOCR; FPRS; EPO; JPO; DERWENT; IBM_TDB	OR	OFF	2015/03/27 12:10
S23	15	(F16F9/34,346,3465,435.cpc. or B62K2025/048.cpc.) and becker-william-m.in.	US-PGPUB; USPAT; USOCR; FPRS; EPO; JPO; DERWENT; IBM_TDB	OR	OFF	2015/03/27 12:14
S24	5	(F16F9/435.cpc.) and (air and bleed)	US-PGPUB; USPAT; USOCR; FPRS; EPO; JPO; DERWENT; IBM_TDB	OR	OFF	2015/03/27 12:15
S25	1	"13890753"	USPAT	OR	OFF	2015/09/28 12:12
S26	148	(F16F9/34,346,3465.cpc. or B62K2025/048.cpc.) and bleed and valve	US-PGPUB; USPAT; USOCR; FPRS; EPO; JPO; DERWENT; IBM_TDB	OR	OFF	2015/09/28 13:44
S27	41	(F16F9/34,346,3465.cpc. or	US-PGPUB;	OR	OFF	2015/09/28

		B62K2025/048.cpc.) and bleed and valve and (manual$2)	USPAT; USOCR; FPRS; EPO; JPO; DERWENT; IBM_TDB			13:44
S28	15	(188/322.13,322.19-322.21.ccls. or 267/64.18,64.22,64.26.ccls.) and bleed.ab. and valve	US-PGPUB; USPAT; USOCR; FPRS; EPO; JPO; DERWENT; IBM_TDB	OR	OFF	2015/09/28 13:44
S29	14	("5503258" | "5697477" | "5816281" | "5853071" | "6592136" | "7255210" | "8480064" | "9103400" | "20030001358" | "20060289258" | "20100186836" | "20120007327" | "20120080279" | "20130319805").PN.	US-PGPUB; USPAT	OR	OFF	2016/02/16 21:21
S30	1	"20130319805"	USPAT	OR	OFF	2016/02/16 21:24
S31	10	(F16F9/34,346,3465.cpc. or B62K2025/048.cpc.) and (bleed adj valve$1)	US-PGPUB; USPAT; USOCR; FPRS; EPO; JPO; DERWENT; IBM_TDB	OR	OFF	2016/02/16 21:34
S32	19	(F16F9/34,346,3465.cpc. or B62K2025/048.cpc.) and (bleed$3 near valve$1)	US-PGPUB; USPAT; USOCR; FPRS; EPO; JPO; DERWENT; IBM_TDB	OR	OFF	2016/02/16 21:35
S33	77	(F16F9/34,346,3465.cpc. or B62K2025/048.cpc.) and (bleed$3) and fork and (air or gas) and oil	US-PGPUB; USPAT; USOCR; FPRS; EPO; JPO; DERWENT; IBM_TDB	OR	OFF	2016/08/08 23:59
S34	89	(F16F9/34,346,3465.cpc. or B62K2025/048.cpc.) and (bleed$3) and fork and (air or gas) and (hydraulic or oil)	US-PGPUB; USPAT; USOCR; FPRS; EPO; JPO; DERWENT; IBM_TDB	OR	OFF	2016/08/08 23:59
S35	35	(suspension and fork).ab. and (bleed$3) and (air or gas) and (hydraulic or oil)	US-PGPUB; USPAT; USOCR; FPRS; EPO; JPO; DERWENT; IBM_TDB	OR	OFF	2016/08/09 14:41
S36	110	(suspension or fork).ab. and suspension and fork and (bleed$3) and (air or gas) and (hydraulic or oil)	US-PGPUB; USPAT; USOCR; FPRS; EPO; JPO;	OR	OFF	2016/08/09 14:54

			DERWENT; IBM_TDB			
S37	257	(suspension or fork).ab. and fox and suspension and fork	US-PGPUB; USPAT; USOCR; FPRS; EPO; JPO; DERWENT; IBM_TDB	OR	OFF	2016/08/09 15:08
S38	152	(suspension or fork).ab. and fox and suspension and fork and (oil or hydraulic) and (gas or air)	US-PGPUB; USPAT; USOCR; FPRS; EPO; JPO; DERWENT; IBM_TDB	OR	OFF	2016/08/09 15:08
S39	68	(suspension or fork).ab. and fox and suspension and fork and (oil or hydraulic) and (gas or air) and bleed$3	US-PGPUB; USPAT; USOCR; FPRS; EPO; JPO; DERWENT; IBM_TDB	OR	OFF	2016/08/09 15:09
S40	32	(suspension or fork).ab. and becker.in. and suspension and fork and (oil or hydraulic) and (gas or air) and bleed$3	US-PGPUB; USPAT; USOCR; FPRS; EPO; JPO; DERWENT; IBM_TDB	OR	OFF	2016/08/09 16:10
S41	1	((air adj bleed) and valve and (lower adj fork) and (oil adj bath)).clm.	US-PGPUB; USPAT; USOCR; FPRS; EPO; JPO; DERWENT; IBM_TDB	OR	OFF	2016/08/09 16:17
S42	78	"6592136"	USPAT	OR	OFF	2016/08/09 17:09
S43	3	"13890753"	US-PGPUB; USPAT; USOCR; FPRS; EPO; JPO; DERWENT; IBM_TDB	OR	OFF	2016/08/09 19:09
S44	5	("2012/0007327").URPN.	USPAT	OR	OFF	2016/11/20 02:22
S45	21	("20070080515" | "20090267316" | "20100109277" | "20100252972" | "20100276906" | "20110202236" | "20120007327" | "20120080279" | "20120136537" | "3837355" | "5511811" | "5887857" | "5961102" | "5971117" | "6105988" | "6135434" | "6213261" | "6328292" | "6520524" | "7284766" | "7374028").PN. OR ("9057416").URPN.	US-PGPUB; USPAT; USOCR	OR	OFF	2016/11/20 02:23
S46	102	(F16F9/34,346,3465.cpc. or B62K2025/048.cpc. or 188/322.13,322.19-322.21.ccls. or	US-PGPUB; USPAT; USOCR;	OR	OFF	2016/11/20 02:26

		267/64.18,64.22,64.26.ccls.) and (bleed$3) and fork and (air or gas) and (hydraulic or oil)	FPRS; EPO; JPO; DERWENT; IBM_TDB			
S47	2483	(fork).ab. and (oil or hydraulic) and (gas or air)	US-PGPUB; USPAT; USOCR; FPRS; EPO; JPO; DERWENT; IBM_TDB	OR	OFF	2016/11/20 02:34
S48	14	(lower adj fork).ab. and (oil or hydraulic) and (gas or air)	US-PGPUB; USPAT; USOCR; FPRS; EPO; JPO; DERWENT; IBM_TDB	OR	OFF	2016/11/20 02:34
S49	90	(F16F9/34,346,3465.cpc. or B62K2025/048.cpc. or 188/322.13,322.19-322.21.ccls. or 267/64.18,64.22,64.26.ccls.) and (fork).ab. and (oil or hydraulic) and (gas or air)	US-PGPUB; USPAT; USOCR; FPRS; EPO; JPO; DERWENT; IBM_TDB	OR	OFF	2016/11/20 02:34
S50	67	(F16F9/34,346,3465.cpc. or B62K2025/048.cpc. or 188/322.13,322.19-322.21.ccls. or 267/64.18,64.22,64.26.ccls.) and (low$2 near5 fork) and (floating adj piston)	US-PGPUB; USPAT; USOCR; FPRS; EPO; JPO; DERWENT; IBM_TDB	OR	OFF	2016/11/20 02:41
S51	93	(F16F9/34,346,3465.cpc. or B62K2025/048.cpc. or 188/322.13,322.19-322.21.ccls. or 267/64.18,64.22,64.26.ccls.) and (low$2 near5 fork) and bleed$3	US-PGPUB; USPAT; USOCR; FPRS; EPO; JPO; DERWENT; IBM_TDB	OR	OFF	2016/11/20 02:44
S52	86	(oil or hydraulic) and (gas or air) and (low$2 near5 fork) and bleed$3 and "188".clas.	US-PGPUB; USPAT; USOCR; FPRS; EPO; JPO; DERWENT; IBM_TDB	OR	OFF	2016/11/20 02:51
S53	3261	(oil or hydraulic) and (gas or air) and (low$2 near5 fork) (floating adj piston) and "188".clas.	US-PGPUB; USPAT; USOCR; FPRS; EPO; JPO; DERWENT; IBM_TDB	OR	OFF	2016/11/20 15:44
S54	69	(oil or hydraulic) and (gas or air) and (low$2 near5 fork) and (floating adj piston) and "188".clas.	US-PGPUB; USPAT; USOCR; FPRS; EPO; JPO; DERWENT; IBM_TDB	OR	OFF	2016/11/20 15:44
S55	20	(oil or hydraulic) and (gas or air) and	US-PGPUB;	OR	OFF	2016/11/20

		(fork).ab. and (floating adj piston) and "188".clas.	USPAT; USOCR; FPRS; EPO; JPO; DERWENT; IBM_TDB			15:49
S56	46	(F16F9/34,346,3465.cpc. or B62K2025/048.cpc. or 188/322.13,322.19-322.21.ccls. or 267/64.18,64.22,64.26.ccls.) and (fork).ab. and bleed$3	US-PGPUB; USPAT; USOCR; FPRS; EPO; JPO; DERWENT; IBM_TDB	OR	OFF	2016/11/20 16:01

11/20/2016 10:13:52 PM
C:\Users\vsahni\Documents\EAST\Workspaces\14822859.wsp

Search Notes	Application/Control No.	Applicant(s)/Patent Under Reexamination
	14822859	BECKER, WILLIAM M.
	Examiner	**Art Unit**
	VISHAL SAHNI	3657

CPC- SEARCHED

Symbol	Date	Examiner
F16F9/34,346,3465,435; B62K2025/048	9/28/2015	VRS
F16F9/34,346,3465,435; B62K2025/048	8/9/2016	VRS
F16F9/34,346,3465,435; B62K2025/048	11/20/2016	VRS

CPC COMBINATION SETS - SEARCHED

Symbol	Date	Examiner

US CLASSIFICATION SEARCHED

Class	Subclass	Date	Examiner

SEARCH NOTES

Search Notes	Date	Examiner
Class 188 and 267 term search (see search history)	9/28/2015	VRS

INTERFERENCE SEARCH

US Class/ CPC Symbol	US Subclass / CPC Group	Date	Examiner

To: patents@wagnerblecher.com,,
From: PAIR_eOfficeAction@uspto.gov
Cc: PAIR_eOfficeAction@uspto.gov
Subject: Private PAIR Correspondence Notification for Customer Number 70408

Dec 02, 2016 04:22:08 AM

Dear PAIR Customer:

FOX C/O WAGNER BLECHER LLP
123 WESTRIDGE DRIVE
WATSONVILLE, CA 95076
UNITED STATES

The following USPTO patent application(s) associated with your Customer Number, 70408 , have new outgoing correspondence. This correspondence is now available for viewing in Private PAIR.

The official date of notification of the outgoing correspondence will be indicated on the form PTOL-90 accompanying the correspondence.

Disclaimer:
The list of documents shown below is provided as a courtesy and is not part of the official file wrapper. The content of the images shown in PAIR is the official record.

Application	Document	Mailroom Date	Attorney Docket No.
14822859	CTFR	12/02/2016	FOX-P5-08-12-US.CON
	892	12/02/2016	FOX-P5-08-12-US.CON

To view your correspondence online or update your email addresses, please visit us anytime at https://sportal.uspto.gov/secure/myportal/privatepair.

If you have any questions, please email the Electronic Business Center (EBC) at EBC@uspto.gov with 'e-Office Action' on the subject line or call 1-866-217-9197 during the following hours:

Monday - Friday 6:00 a.m. to 12:00 a.m.

Thank you for prompt attention to this notice,

UNITED STATES PATENT AND TRADEMARK OFFICE

PATENT APPLICATION INFORMATION RETRIEVAL SYSTEM

IN THE UNITED STATES PATENT AND TRADEMARK OFFICE

In re Application of: William M. Becker	)	
Application No.: 14/822,859	)	Examiner: Sahni, V.
Filed: August 10, 2015	)	Art Unit: 3657
For: METHOD AND APPARATUS FOR AN ADJUSTABLE DAMPER	)	Conf. No.: 6345

Commissioner for Patents
P.O. Box RCE
Alexandria, VA 22313-1450

PRELIMINARY AMENDMENT AND RESPONSE ACCOMPANYING THE PRESENT REQUEST FOR CONTINUING EXAMINATION (RCE)

Dear Sir:

In response to the Final Office Action with a Notification date of December 2, 2016, in conjunction with the RCE filed herewith, Applicants respectfully request reconsideration of the above referenced patent application. Please consider the following amendments and remarks for allowance of the above-identified patent application.

Amended Claims begin on page 2 of this response.

Remarks begin on page 7 of this response.

WAGNER BLECHER LLP
123 Westridge Drive
Watsonville, CA 95076

PATENT APPLICATION

ATTORNEY DOCKET NO. FOX-P5-08-12-US.CON

IN THE UNITED STATES PATENT AND TRADEMARK OFFICE

Inventor(s): William M. BECKER

Confirmation No.: 6345

Application No.: 14/822,859

Examiner: Vishal R. SAHNI

Filing Date: August 10, 2015

Group Art Unit: 3657

Title: METHOD AND APPARATUS FOR AN ADJUSTABLE DAMPER

Mail Stop RCE
Commissioner For Patents
PO Box 1450
Alexandria, VA 22313-1450

REQUEST FOR CONTINUED EXAMINATION (RCE) 37 CFR 1.114

Subsection (b) of 35 U.S.C. 132, effective on May 29, 2000, provides for continued examination of a utiltity or plant application filed on or after June 8, 1995.
See The American Inventors Protection Act of 1999 (AIPA).

This is a Request for Continued Examination (RCE) under CFR 1.114 of the above-identified application.

NOTE: 37 CFR 1.114 is effective on May 20, 2000. If the above- application was filed prior to May 29, 2000, applicant may wish to consider filing a continued prosecution application (CPA) under CFR 1.53(d) (PTO/SB/29) instead of a RCE to be eligible for the patent term adjustment provisions of the AIPA. See Changes to Application Examination and Provisional Application Practice, Interim Rule, 65 Fed. Reg. 14865 (Mar. 20, 2000), 1233 off. Gaz. Pat. Office

Submission Required under 37 CFR 1.114

☐ Previously submitted

- ☐ Consider the amendment(s)/reply under 37 CFR 1.116 previously filed on _____ .
  (Any unentered amendment(s) referred to above will be entered).
- ☐ Consider the arguments in the Appeal Brief or Reply Brief prevously filed on _____ .
- ☐ Other _____

☒ Enclosed

- ☒ Amendment/Reply
- ☐ Affidavit(s)/Declaration(s)
- ☐ Information Disclosure Statement (IDS)
- ☐ Other _____

Miscellaneous

☐ Suspension of action is requested under 37 CFR 1.103(c) for a period of _____ months.
The fee for this Suspension is (37 CFR 1.17(i)) $130.00

☐ Other _____

CONTINUED EXAMINATION TRANSMITTAL (RCE) (37 CFR 1.114) (continued)	PATENT APPLICATION ATTORNEY DOCKET NO. FOX-P5-08-12-US.CON

Fees

☐ RCE filing fee first request $1,200

☒ RCE filing fee after first request $1,700

☐ A Petition for Extension of Time

☐ 1st Month $200 ☐ 2nd Month $600 ☐ 3rd Month $1,400 ☐ 4th Month $2,200

Discounted Fees

☐ Applicant asserts small entity status.
Therefore the fees shown above are reduced and the resulting fee is: $ _____

☐ Applicant certifies micro entity status.
Therefore the fees shown above are reduced and the resulting fee is: $ _____

☐ Additional claim fees of $ _____

☒ Please charge Deposit Account 50-4157 the sum of $ 1,700 . At any time during the pendency of this application, please charge any fees required or credit any over payment to Deposit Account 50-4157 pursuant to 37 CFR 1.25. Additionally please charge any fees to Deposit Account 50-4157 under 37 CFR 1.16 through 1.21 inclusive, and any other sections in Title 37 of the Code of Federal Regulations that my regulate fees.

☐ A duplicate copy of this transmittal letter is enclosed.

☐ I hereby certify that this correspondence is being deposited with the United States Postal Service as first class mail in an envelope addressed to: Commissioner for Patents, Alexandria, VA 22313-1450

Date of Deposit:

OR

☒ I hereby certify that this paper is being transmitted to the Patent and Trademark Office facsimile number (571) 273-8300 or via electronic filing.
Date of facsimile/transmission: 03/02/2017

Typed Name: Robert Condon

Signature: /Robert Condon/

Respectfully submitted,
Fox Factory, Inc.

By /John P. Wagner, Jr./
John P. Wagner, Jr.

Attorney/Agent for Applicant(s)

Reg No. : 35,398

Date : 03/02/2017

Telephone : 408-377-0500

Electronic Patent Application Fee Transmittal

Application Number:	14822859
Filing Date:	10-Aug-2015
Title of Invention:	METHOD AND APPARATUS FOR AN ADJUSTABLE DAMPER
First Named Inventor/Applicant Name:	William M. Becker
Filer:	John Paul Wagner Jr./Robert Condon
Attorney Docket Number:	FOX-P5-08-12-US.CON

Filed as Large Entity

Filing Fees for Utility under 35 USC 111(a)

Description	Fee Code	Quantity	Amount	Sub-Total in USD($)
Basic Filing:				
Pages:				
Claims:				
Miscellaneous-Filing:				
Petition:				
Patent-Appeals-and-Interference:				
Post-Allowance-and-Post-Issuance:				
Extension-of-Time:				

Description	Fee Code	Quantity	Amount	Sub-Total in USD($)
Miscellaneous:				
RCE- 2ND AND SUBSEQUENT REQUEST	1820	1	1700	1700
		Total in USD ($)		**1700**

Electronic Acknowledgement Receipt	
EFS ID:	28520997
Application Number:	14822859
International Application Number:	
Confirmation Number:	6345
Title of Invention:	METHOD AND APPARATUS FOR AN ADJUSTABLE DAMPER
First Named Inventor/Applicant Name:	William M. Becker
Customer Number:	70408
Filer:	John Paul Wagner Jr./Robert Condon
Filer Authorized By:	John Paul Wagner Jr.
Attorney Docket Number:	FOX-P5-08-12-US.CON
Receipt Date:	02-MAR-2017
Filing Date:	10-AUG-2015
Time Stamp:	18:18:45
Application Type:	Utility under 35 USC 111(a)

Payment information:

Submitted with Payment	yes
Payment Type	DA
Payment was successfully received in RAM	$1700
RAM confirmation Number	030317INTEFSW00005055504157
Deposit Account	
Authorized User	
The Director of the USPTO is hereby authorized to charge indicated fees and credit any overpayment as follows:	

File Listing:

Document Number	Document Description	File Name	File Size(Bytes)/ Message Digest	Multi Part /.zip	Pages (if appl.)
1		FOX-P5-08-12-USCON_20170302_RCE.pdf	180945 740b7baee42d406c3cd949d730fbd37cb49dc1aa	yes	16

Multipart Description/PDF files in .zip description

Document Description	Start	End
Applicant Arguments/Remarks Made in an Amendment	9	16
Claims	4	8
Request for Continued Examination (RCE)	3	3
Transmittal Letter	1	2

Warnings:

Information:

2	Fee Worksheet (SB06)	fee-info.pdf	30547 bbeadbf357a9ff132570c5f5b3a523fcf7caf4b5	no	2

Warnings:

Information:

Total Files Size (in bytes):	211492

This Acknowledgement Receipt evidences receipt on the noted date by the USPTO of the indicated documents, characterized by the applicant, and including page counts, where applicable. It serves as evidence of receipt similar to a Post Card, as described in MPEP 503.

New Applications Under 35 U.S.C. 111
If a new application is being filed and the application includes the necessary components for a filing date (see 37 CFR 1.53(b)-(d) and MPEP 506), a Filing Receipt (37 CFR 1.54) will be issued in due course and the date shown on this Acknowledgement Receipt will establish the filing date of the application.

National Stage of an International Application under 35 U.S.C. 371
If a timely submission to enter the national stage of an international application is compliant with the conditions of 35 U.S.C. 371 and other applicable requirements a Form PCT/DO/EO/903 indicating acceptance of the application as a national stage submission under 35 U.S.C. 371 will be issued in addition to the Filing Receipt, in due course.

New International Application Filed with the USPTO as a Receiving Office
If a new international application is being filed and the international application includes the necessary components for an international filing date (see PCT Article 11 and MPEP 1810), a Notification of the International Application Number and of the International Filing Date (Form PCT/RO/105) will be issued in due course, subject to prescriptions concerning national security, and the date shown on this Acknowledgement Receipt will establish the international filing date of the application.

REMARKS

Claims 1, 3-16 and 18-22 are pending in the application. Claims 1, 3-16 and 18-22 are rejected. Claims 18-22 are canceled herein.

EXAMINER INTERVIEW SUMMARY

A telephonic Examiner Interview was held on March 1, 2017. Participants were Examiner Vishal Sahni and Applicant's attorney John P. Wagner, Jr. (35,398). Attorney for Applicant and Examiner Sahni discussed the present Office Action, the cited references, and the present Application and Claims. No agreement was reached with respect to the present Application. Applicant wishes to thank Examiner Sahni for the Interview.

Claim Rejections - 35 U.S.C. §102

Claims 18 and 19

Claims 18 and 19 are rejected under pre-AIA 35 U.S.C. 102(a) as being anticipated by Larsson et al. (US 7,255,210), hereinafter "Larsson". Claims 18 and 19 are canceled herein, thereby rendering a discussion of the rejection of Claims 18 and 19 moot at this time.

Claim Rejections - 35 U.S.C. §103

Claims 1, 3-6, 8-15 and 18-22

Claims 1, 3-6, 8-15 and 18-22 are rejected under pre-AIA 35 U.S.C. 103(a) as being unpatentable over Galasso et al. (US 2012/0080279), hereinafter "Galasso", in view of Julia (US 6,311,961), hereinafter "Julia". Claims 10-15 and 18-22 are canceled herein, thereby rendering a discussion of the rejection of Claims 10-15 and 18-22 moot at this time. Regarding Claims 1, 3-6 and 8-9, Applicant respectfully submits that Claims 1, 3-6 and 8-9 are not shown or suggested by Galasso taken alone or in combination with Julia for at least the following reasons.

Claim 1 has been amended herein to explicitly recite:

1. (Currently Amended) ~~An~~ A lower fork and air bleed ~~system~~ assembly combination comprising:

a lower fork, said lower fork configured to have a first end coupled to a vehicle wheel, and a second end configured to be telescopically engaged with a first end of an upper fork, said lower fork further comprising:

a lower leg seal located at an outermost edge of said second end of said lower fork tube, said lower leg seal configured for sealing closed a gap disposed between said upper fork tube and said lower fork tube when said lower fork is telescopically engaged with said first end of said upper fork, thereby preventing an oil bath lubrication occupying an area within said lower fork tube at a first end of said lower fork tube from leaking from said lower fork; and

an upper bushing attached to and positioned adjacent to said lower leg seal; and

an air bleed assembly disposed on said lower fork tube, said air bleed assembly configured for equalizing ambient pressure within said lower fork, said air bleed assembly comprising:

a fluid passage disposed between an interior of said lower fork and an exterior of said lower fork; and

a manually operable valve located in said lower fork and coupled to said fluid passage, said manually operable valve having a first position substantially closing said fluid passage and a second position allowing a fluid to flow between said interior and said exterior, said manually operable valve disposed between said lower leg seal and said first end of said lower fork, and wherein said fluid passage and said manually operable valve are located at a distance from an oil

bath lubrication within said lower fork, such that when said manually operable valve is in said second position, most, if not all of said oil bath lubrication remains within said lower fork and such that when trapped air pressure inside said lower fork, that is higher than a local ambient air pressure outside of said suspension fork or shock absorber, is relieved most, ~~if not all~~ of said oil bath lubrication that is within said lower fork remains within said lower fork.

Applicant understands Galasso to disclose "METHODS AND APPARATUS FOR SAG ADJUSTMENT" (Galasso, Title) in which an "integrated damper/gas spring shock absorber includes a bleed port located at a position on a gas spring cylinder corresponding to a desired sag setting" (Galasso, Abstract). Galasso provides techniques for easily adjusting an amount of preload applied to a spring in a shock absorber. (Galasso, paragraph [0007].)

More particularly, Applicant understands Galasso to provide, and with reference to Figure 2 and paragraphs [0027]-[0028] of Galasso, a <u>damping fluid cylinder 220 telescopically housed within the gas cylinder 210</u>. The damping fluid cylinder 220 is coupled to the piston 216 <u>on a sealed, upper end of the damping fluid cylinder 220</u> and is <u>movably mounted</u> within the gas cylinder 210. Additionally, the sag setting bleed port 224 functions to allow air to "bleed from the positive air spring 242 until the load on the shock absorber 200 from the weight of the rider forces the piston 216 to move to a position where the sealing element 218 abuts the inner surface of the sag setting bleed port 224" (Galasso, paragraph [0031]).

Thus, as can be seen, Galasso functions to allow air to bleed from the gas cylinder (more specifically, the positive air spring 242) to the exterior of the shock

absorber such that the load on the shock absorber 200 from the weight of the rider is satisfactorily adjusted. (Galasso, paragraph [0031].) Galasso is structured to accomplish this task by locating the SAG setting bleed port 224 at some position on the gas spring cylinder 210 and above the section that creates a seal between the damping fluid cylinder 220 (holding an oil bath) and the gas cylinder 210, wherein the SAG setting bleed port 224 is closer to the frame of the vehicle than the seal that is located between the damping fluid cylinder 220 and the gas cylinder 210. (Galasso, paragraph [0031].)

In contrast to Galasso, Applicant's features, as recited in newly amended Claim 1, locate its air bleed system in a lower fork, wherein the vent hole is located between the lower leg seal and the bushing that is attached thereto. The manually operable valve is also positioned between the lower leg seal and the first end of said lower fork (first end is configured to be coupled to a vehicle wheel). Thus, the air bleed system, including the manually operable valve, is located below the lower leg seal that is attached to the outmost edge of a second end of the lower fork tube, wherein the second end of the lower fork is configured to receive an upper fork telescopically therein. Of note, an oil bath lubrication is located within and at the first end of the lower fork tube, the oil lubrication remaining in such a position, via gravity. Applicant's specification describes the necessity of such a positioning (Applicant's specification, paragraph [0021]):

> When a fork is assembled at low elevation and then taken to ride at high elevations, the "sealed lower leg air pressure", because of the now decreased high elevation exterior air pressure and corresponding differential pressure, adds

pressure and load to the lower oil control lip of the seal which creates significantly higher axial friction in a telescoping suspension fork.

This pressure and load added to the lower oil control lip of the seal, sealing the gap between the lower fork tube and a telescopically positioned upper fork tube, serves to compromise the seal, and possibly enable the oil lubrication within the lower fork tube to leak/spray out of the damper assembly. However, due to the positioning of Applicant's air bleed system being located directly below the lower leg seal, within the lower fork tube, wherein the lower fork tube is positioned further away from the frame of the vehicle than the upper fork tube, Applicant's features enable the release of excessive air pressure from the lower fork tube, thereby reducing the pressure and load being applied to the lower oil control lip of the lower leg seal, while enabling the oil bath lubrication to remain fairly leveled at the bottom of the lower fork tube, without spraying/leaking out through the open vent hole. Applicant's features allow for the pressure in the lower leg to be equalized to ambient pressure at the higher elevation, and therefore restore the desired friction in the lower fork tube in relation to the upper fork tube. Thus, in sum, the air bleed assembly 300 is located below Applicant's lower leg seal, and far enough away from the oil bath lubrication such that a substantial portion of the oil bath lubrication is enabled to remain within the lower fork tube even when air is being released from the lower fork tube through the vent hole of the air bleed assembly 300.

Galasso, <u>on the other hand</u>, includes a SAG setting bleed port 224 that is positioned <u>above a seal</u> between the gas cylinder 210 and the damping fluid cylinder 220. Galasso functions to allow air to be released from a cylinder <u>that is not a cylinder that contains an oil bath lubrication</u>. If Applicant's air bleed system were positioned

above the seal that lies between the lower fork tube and the upper fork tube, then when the air bleed system is opened to allow for the escape of excessive air pressure from the damper, the pressure that is being applied on the lower oil control lip of the lower leg seal would not be reduced, as the pressure that is being applied is from the direction of the lower fork tube and not the upper fork tube.

Applicant further understands the present Office Action (at pages 4 and 5) to rely upon Julia as teaching that "suspension units may just as well be mounted upside down". For the reason stated above with respect to Galasso, Applicant again respectfully submits that if Applicant's air bleed system were positioned "upside down" with the air bleed assembly on an upper fork or above the lower leg seal, when the air bleed system is opened to allow for the escape of excessive air pressure, the pressure that is being applied on the lower oil control lip of the lower leg seal would not be reduced, as the pressure that is being applied is from the direction of the lower fork tube and not the upper fork tube. As such, the positioning and orientation of the present invention is not arbitrary. Hence, Applicant respectfully submits that the "reversible" positioning teachings of Julia would render the present invention inoperable.

Therefore, Applicant respectfully submits that Galasso taken alone or in combination with Julia does not show, suggest, or render obvious the features as are set forth in independent Claim 1, and as such, Claim 1 traverses the rejection under 35 U.S.C. §103 and is in condition for allowance. Accordingly, Applicant also respectfully

submits that Claims 3 and 8-9 depending on Claim 1 are in condition for allowance as being dependent upon an allowable base claim.

Claims 7 and 16

Claims 7 and 16 are rejected under pre-AIA 35 U.S.C. 103(a) as being unpatentable over Galasso in view of Julia and Hiramoto et al. (US 5,697,477), hereinafter "Hiramoto". Claim 16 is canceled herein, thereby rendering a discussion of the rejection of Claim 16 moot at this time.

Regarding Claim 7, as stated above, Applicant respectfully submits that Galasso taken alone or in combination with Julia does not show, suggest, or render obvious the features as are set forth in independent Claim 1, and as such, Claim 1 traverses the rejection under 35 U.S.C. §103 and is in condition for allowance. Accordingly, Applicant also respectfully submits that Claim 7 which depends on Independent Claim 1 is in condition for allowance as being dependent upon an allowable base claim.

CONCLUSION

Based on the amendments and arguments presented above, Applicant respectfully asserts that remaining Claims 1 and 3-9 and overcome the rejection of record and, therefore, Applicant respectfully solicits allowance of these Claims.

The Examiner is invited to contact Applicant's undersigned representative if the Examiner believes such action would expedite resolution of the present Application.

In the event this paper is not timely filed, Applicant petitions for an appropriate extension of time. The Director is hereby authorized to charge any fees under 37 CFR 1.16 and 1.17 which may be required by this paper to Deposit Account No. 50-4157 with reference to Docket No. FOX-P5-08-12-US.CON.

Respectfully submitted,

WAGNER BLECHER LLP

Dated: 3/2/2017

/John P. Wagner, Jr./

John P. Wagner, Jr.
Reg. No. 35,398

Wagner Blecher LLP
123 Westridge Dr.
Watsonville, CA 95076
(408) 377-0500

AMENDMENTS TO THE CLAIMS

1. (Currently Amended) ~~An~~ A lower fork and air bleed ~~system~~ assembly combination comprising:

a lower fork, said lower fork configured to have a first end coupled to a vehicle wheel, and a second end configured to be telescopically engaged with a first end of an upper fork, said lower fork further comprising:

a lower leg seal located at an outermost edge of said second end of said lower fork tube, said lower leg seal configured for sealing closed a gap disposed between said upper fork tube and said lower fork tube when said lower fork is telescopically engaged with said first end of said upper fork, thereby preventing an oil bath lubrication occupying an area within said lower fork tube at a first end of said lower fork tube from leaking from said lower fork; and

an upper bushing attached to and positioned adjacent to said lower leg seal; and

an air bleed assembly disposed on said lower fork tube, said air bleed assembly configured for equalizing ambient pressure within said lower fork, said air bleed assembly comprising:

a fluid passage disposed between an interior of said lower fork and an exterior of said lower fork; and

a manually operable valve located in said lower fork and coupled to said fluid passage, said manually operable valve having a first position substantially closing said fluid passage and a second position allowing a fluid to flow between said interior and said exterior, said manually operable valve disposed between

said lower leg seal and said first end of said lower fork, and wherein said fluid passage and said manually operable valve are located at a distance from an oil bath lubrication within said lower fork, such that when said manually operable valve is in said second position, most, if not all of said oil bath lubrication remains within said lower fork and such that when trapped air pressure inside said lower fork, that is higher than a local ambient air pressure outside of said suspension fork or shock absorber, is relieved most, ~~if not all~~ of said oil bath lubrication that is within said lower fork remains within said lower fork.

2. (Canceled)

3. (Currently Amended) The lower fork and air bleed ~~system~~ assembly combination of ~~claim~~ Claim 1, wherein said fluid comprises:

a gas.

4. (Currently Amended) The lower fork and air bleed ~~system~~ assembly combination of ~~claim~~ Claim 1, said air bleed assembly further comprising:

a valve activator coupled with said manually operable valve, said valve activator comprising:

an activation position placing said manually operable valve into said first position; and

a deactivation position placing said manually operable valve into said second position, and whereupon when in said activation position, the trapped air pressure in said lower fork is equalized with the local ambient air pressure.

5. (Currently Amended) The lower fork and air bleed ~~system~~ assembly combination of ~~claim~~ Claim 4, wherein said valve activator comprises:

a button to select said activation position and said deactivation position.

6. (Currently Amended) The lower fork and air bleed ~~system~~ assembly combination of ~~claim~~ Claim 4, wherein said valve activator is located on a die-cast feature of said ~~suspension fork or shock absorber~~ lower fork.

7. (Currently Amended) The lower fork and air bleed ~~system~~ assembly combination of ~~claim~~ Claim 6, further comprising:

a diametrical recess; and

a sealing o-ring comprising:

a sealed position; and

an unsealed position, wherein said sealed position seals between said die-cast feature and said lower fork, whereupon when said valve activator is moved from said activation position to said deactivation position, said sealing o-ring moves into said diametrical recess, thereby attaining said unsealed position and letting air pressure by-pass into or out of said lower fork via a vent hole.

8. (Currently Amended) The lower fork and air bleed ~~system~~ assembly combination of ~~claim~~ Claim 4, wherein said manually operable valve comprises:

a spring coupled with said valve activator, whereupon when said valve activator is moved into said deactivation position, said spring biases said valve activator toward said first position.

9. (Currently Amended) The lower fork and air bleed ~~system~~ assembly combination of ~~claim~~ Claim 8, wherein said second position comprises:

a sealing engagement between said sealing o-ring and a seal bore, wherein when in said sealing engagement, said trapped air pressure does not by-pass into or out of said lower fork.

10. (Canceled)

11. (Canceled)

12. (Canceled)

13. (Canceled)

14. (Canceled)

15. (Canceled)

16. (Canceled)

17. (Canceled)

18. (Canceled)

19. (Canceled)

20. (Canceled)

21. (Canceled)

22. (Canceled)

UNITED STATES PATENT AND TRADEMARK OFFICE

UNITED STATES DEPARTMENT OF COMMERCE
United States Patent and Trademark Office
Address: COMMISSIONER FOR PATENTS
P.O. Box 1450
Alexandria, Virginia 22313-1450
www.uspto.gov

APPLICATION NO.	FILING DATE	FIRST NAMED INVENTOR	ATTORNEY DOCKET NO.	CONFIRMATION NO.
14/822,859	08/10/2015	William M. Becker	FOX-P5-08-12-US.CON	6345

70408 7590 03/07/2017
FOX C/O WAGNER BLECHER LLP
123 WESTRIDGE DRIVE
WATSONVILLE, CA 95076

EXAMINER
SAHNI, VISHAL R

ART UNIT	PAPER NUMBER
3657	

NOTIFICATION DATE	DELIVERY MODE
03/07/2017	ELECTRONIC

Please find below and/or attached an Office communication concerning this application or proceeding.

The time period for reply, if any, is set in the attached communication.

Notice of the Office communication was sent electronically on above-indicated "Notification Date" to the following e-mail address(es):

patents@wagnerblecher.com

Applicant-Initiated Interview Summary	Application No.	Applicant(s)	
	14/822,859	BECKER, WILLIAM M.	
	Examiner	Art Unit	
	VISHAL SAHNI	3657	

All participants (applicant, applicant's representative, PTO personnel):

(1) *VISHAL SAHNI*. (3)_____.

(2) *JOHN WAGNER (Attorney)*. (4)_____.

Date of Interview: *01 March 2017*.

Type: ☒ Telephonic ☐ Video Conference
☐ Personal [copy given to: ☐ applicant ☐ applicant's representative]

Exhibit shown or demonstration conducted: ☐ Yes ☒ No.
If Yes, brief description: _____.

Issues Discussed ☐101 ☐112 ☐102 ☐103 ☐Others
(For each of the checked box(es) above, please describe below the issue and detailed description of the discussion)

Claim(s) discussed: *1*.

Identification of prior art discussed: *USP Pub. 20120080279*.

Substance of Interview
(For each issue discussed, provide a detailed description and indicate if agreement was reached. Some topics may include: identification or clarification of a reference or a portion thereof, claim interpretation, proposed amendments, arguments of any applied references etc...)

Discussed distinctions between the prior art cited in the 12/02 Final Rejection and the instant invention. No agreement was reached.

Applicant recordation instructions: The formal written reply to the last Office action must include the substance of the interview. (See MPEP section 713.04). If a reply to the last Office action has already been filed, applicant is given a non-extendable period of the longer of one month or thirty days from this interview date, or the mailing date of this interview summary form, whichever is later, to file a statement of the substance of the interview

Examiner recordation instructions: Examiners must summarize the substance of any interview of record. A complete and proper recordation of the substance of an interview should include the items listed in MPEP 713.04 for complete and proper recordation including the identification of the general thrust of each argument or issue discussed, a general indication of any other pertinent matters discussed regarding patentability and the general results or outcome of the interview, to include an indication as to whether or not agreement was reached on the issues raised.

☐ Attachment

/VISHAL SAHNI/
Primary Examiner, Art Unit 3657

Summary of Record of Interview Requirements

Manual of Patent Examining Procedure (MPEP), Section 713.04, Substance of Interview Must be Made of Record
A complete written statement as to the substance of any face-to-face, video conference, or telephone interview with regard to an application must be made of record in the application whether or not an agreement with the examiner was reached at the interview.

Title 37 Code of Federal Regulations (CFR) § 1.133 Interviews
Paragraph (b)

In every instance where reconsideration is requested in view of an interview with an examiner, a complete written statement of the reasons presented at the interview as warranting favorable action must be filed by the applicant. An interview does not remove the necessity for reply to Office action as specified in §§ 1.111, 1.135. (35 U.S.C. 132)

37 CFR §1.2 Business to be transacted in writing.
All business with the Patent or Trademark Office should be transacted in writing. The personal attendance of applicants or their attorneys or agents at the Patent and Trademark Office is unnecessary. The action of the Patent and Trademark Office will be based exclusively on the written record in the Office. No attention will be paid to any alleged oral promise, stipulation, or understanding in relation to which there is disagreement or doubt.

The action of the Patent and Trademark Office cannot be based exclusively on the written record in the Office if that record is itself incomplete through the failure to record the substance of interviews.

It is the responsibility of the applicant or the attorney or agent to make the substance of an interview of record in the application file, unless the examiner indicates he or she will do so. It is the examiner's responsibility to see that such a record is made and to correct material inaccuracies which bear directly on the question of patentability.

Examiners must complete an Interview Summary Form for each interview held where a matter of substance has been discussed during the interview by checking the appropriate boxes and filling in the blanks. Discussions regarding only procedural matters, directed solely to restriction requirements for which interview recordation is otherwise provided for in Section 812.01 of the Manual of Patent Examining Procedure, or pointing out typographical errors or unreadable script in Office actions or the like, are excluded from the interview recordation procedures below. Where the substance of an interview is completely recorded in an Examiners Amendment, no separate Interview Summary Record is required.

The Interview Summary Form shall be given an appropriate Paper No., placed in the right hand portion of the file, and listed on the "Contents" section of the file wrapper. In a personal interview, a duplicate of the Form is given to the applicant (or attorney or agent) at the conclusion of the interview. In the case of a telephone or video-conference interview, the copy is mailed to the applicant's correspondence address either with or prior to the next official communication. If additional correspondence from the examiner is not likely before an allowance or if other circumstances dictate, the Form should be mailed promptly after the interview rather than with the next official communication.

The Form provides for recordation of the following information:
- Application Number (Series Code and Serial Number)
- Name of applicant
- Name of examiner
- Date of interview
- Type of interview (telephonic, video-conference, or personal)
- Name of participant(s) (applicant, attorney or agent, examiner, other PTO personnel, etc.)
- An indication whether or not an exhibit was shown or a demonstration conducted
- An identification of the specific prior art discussed
- An indication whether an agreement was reached and if so, a description of the general nature of the agreement (may be by attachment of a copy of amendments or claims agreed as being allowable). Note: Agreement as to allowability is tentative and does not restrict further action by the examiner to the contrary.
- The signature of the examiner who conducted the interview (if Form is not an attachment to a signed Office action)

It is desirable that the examiner orally remind the applicant of his or her obligation to record the substance of the interview of each case. It should be noted, however, that the Interview Summary Form will not normally be considered a complete and proper recordation of the interview unless it includes, or is supplemented by the applicant or the examiner to include, all of the applicable items required below concerning the substance of the interview.

A complete and proper recordation of the substance of any interview should include at least the following applicable items:
1) A brief description of the nature of any exhibit shown or any demonstration conducted,
2) an identification of the claims discussed,
3) an identification of the specific prior art discussed,
4) an identification of the principal proposed amendments of a substantive nature discussed, unless these are already described on the Interview Summary Form completed by the Examiner,
5) a brief identification of the general thrust of the principal arguments presented to the examiner,
   (The identification of arguments need not be lengthy or elaborate. A verbatim or highly detailed description of the arguments is not required. The identification of the arguments is sufficient if the general nature or thrust of the principal arguments made to the examiner can be understood in the context of the application file. Of course, the applicant may desire to emphasize and fully describe those arguments which he or she feels were or might be persuasive to the examiner.)
6) a general indication of any other pertinent matters discussed, and
7) if appropriate, the general results or outcome of the interview unless already described in the Interview Summary Form completed by the examiner.

Examiners are expected to carefully review the applicant's record of the substance of an interview. If the record is not complete and accurate, the examiner will give the applicant an extendable one month time period to correct the record.

Examiner to Check for Accuracy

If the claims are allowable for other reasons of record, the examiner should send a letter setting forth the examiner's version of the statement attributed to him or her. If the record is complete and accurate, the examiner should place the indication, "Interview Record OK" on the paper recording the substance of the interview along with the date and the examiner's initials.

PTO/SB/06 (09-11)
Approved for use through 1/31/2014. OMB 0651-0032
U.S. Patent and Trademark Office; U.S. DEPARTMENT OF COMMERCE
Under the Paperwork Reduction Act of 1995, no persons are required to respond to a collection of information unless it displays a valid OMB control number.

PATENT APPLICATION FEE DETERMINATION RECORD Substitute for Form PTO-875	Application or Docket Number 14/822,859	Filing Date 08/10/2015	☐ To be Mailed

ENTITY: ☒ LARGE ☐ SMALL ☐ MICRO

APPLICATION AS FILED – PART I

FOR	(Column 1) NUMBER FILED	(Column 2) NUMBER EXTRA	RATE ($)	FEE ($)
☐ BASIC FEE (37 CFR 1.16(a), (b), or (c))	N/A	N/A	N/A	
☐ SEARCH FEE (37 CFR 1.16(k), (i), or (m))	N/A	N/A	N/A	
☐ EXAMINATION FEE (37 CFR 1.16(o), (p), or (q))	N/A	N/A	N/A	
TOTAL CLAIMS (37 CFR 1.16(i))	minus 20 =	*	X $ =	
INDEPENDENT CLAIMS (37 CFR 1.16(h))	minus 3 =	*	X $ =	
☐ APPLICATION SIZE FEE (37 CFR 1.16(s))	If the specification and drawings exceed 100 sheets of paper, the application size fee due is $310 ($155 for small entity) for each additional 50 sheets or fraction thereof. See 35 U.S.C. 41(a)(1)(G) and 37 CFR 1.16(s).			
☐ MULTIPLE DEPENDENT CLAIM PRESENT (37 CFR 1.16(j))				
* If the difference in column 1 is less than zero, enter "0" in column 2.			TOTAL	

APPLICATION AS AMENDED – PART II

AMENDMENT

03/02/2017	(Column 1) CLAIMS REMAINING AFTER AMENDMENT		(Column 2) HIGHEST NUMBER PREVIOUSLY PAID FOR	(Column 3) PRESENT EXTRA	RATE ($)	ADDITIONAL FEE ($)
Total (37 CFR 1.16(i))	* 8	Minus	** 20	= 0	X $80 =	0
Independent (37 CFR 1.16(h))	* 1	Minus	***3	= 0	X $420 =	0
☐ Application Size Fee (37 CFR 1.16(s))						
☐ FIRST PRESENTATION OF MULTIPLE DEPENDENT CLAIM (37 CFR 1.16(j))						
					TOTAL ADD'L FEE	0

AMENDMENT

	(Column 1) CLAIMS REMAINING AFTER AMENDMENT		(Column 2) HIGHEST NUMBER PREVIOUSLY PAID FOR	(Column 3) PRESENT EXTRA	RATE ($)	ADDITIONAL FEE ($)
Total (37 CFR 1.16(i))	*	Minus	**	=	X $ =	
Independent (37 CFR 1.16(h))	*	Minus	***	=	X $ =	
☐ Application Size Fee (37 CFR 1.16(s))						
☐ FIRST PRESENTATION OF MULTIPLE DEPENDENT CLAIM (37 CFR 1.16(j))						
					TOTAL ADD'L FEE	

* If the entry in column 1 is less than the entry in column 2, write "0" in column 3.
** If the "Highest Number Previously Paid For" IN THIS SPACE is less than 20, enter "20".
*** If the "Highest Number Previously Paid For" IN THIS SPACE is less than 3, enter "3".
The "Highest Number Previously Paid For" (Total or Independent) is the highest number found in the appropriate box in column 1.

LIE
NINA RATANAVONG

This collection of information is required by 37 CFR 1.16. The information is required to obtain or retain a benefit by the public which is to file (and by the USPTO to process) an application. Confidentiality is governed by 35 U.S.C. 122 and 37 CFR 1.14. This collection is estimated to take 12 minutes to complete, including gathering, preparing, and submitting the completed application form to the USPTO. Time will vary depending upon the individual case. Any comments on the amount of time you require to complete this form and/or suggestions for reducing this burden, should be sent to the Chief Information Officer, U.S. Patent and Trademark Office, U.S. Department of Commerce, P.O. Box 1450, Alexandria, VA 22313-1450. DO NOT SEND FEES OR COMPLETED FORMS TO THIS ADDRESS. **SEND TO: Commissioner for Patents, P.O. Box 1450, Alexandria, VA 22313-1450.**
If you need assistance in completing the form, call 1-800-PTO-9199 and select option 2.

UNITED STATES PATENT AND TRADEMARK OFFICE

USPTO Automated Interview Request (AIR)

Feb 21 2017

This paper requesting to schedule and/or conduct an interview is appropriate because:

This submission is requested to be accepted as an authorization for this interview to communicate via the internet. Recognizing that Internet communications are not secure, I hereby authorize the USPTO to communicate with the undersigned concerning scheduling of the interview via video conference, instant messaging, or electronic mail, and to conduct the interview in accordance with office practice including video conferencing.

Name(s):
John P. Wagner, Jr.

S-signature:
/John P Wagner Jr/

Registration Number:
35398

U.S. Application Number:
14822859

Confirmation Number:
6345

E-mail Address:
jwagner@wagnerblecher.com

Phone Number:
4082343649

Proposed Time of Interview:
3-1-2017 2:00 PM ET

Prefered Interview Type:
Telephonic

I am the applicant or applicant's representative for this application.

uspto UNITED STATES PATENT AND TRADEMARK OFFICE

PALM-SILVER

To: patents@wagnerblecher.com,,
From: PAIR_eOfficeAction@uspto.gov
Cc: PAIR_eOfficeAction@uspto.gov
Subject: Private PAIR Correspondence Notification for Customer Number 70408

Mar 07, 2017 03:40:13 AM

Dear PAIR Customer:

FOX C/O WAGNER BLECHER LLP
123 WESTRIDGE DRIVE
WATSONVILLE, CA 95076
UNITED STATES

The following USPTO patent application(s) associated with your Customer Number, 70408 , have new outgoing correspondence. This correspondence is now available for viewing in Private PAIR.

The official date of notification of the outgoing correspondence will be indicated on the form PTOL-90 accompanying the correspondence.

Disclaimer:
The list of documents shown below is provided as a courtesy and is not part of the official file wrapper. The content of the images shown in PAIR is the official record.

Application	Document	Mailroom Date	Attorney Docket No.
14822859	INTV.SUM.APP	03/07/2017	FOX-P5-08-12-US.CON

To view your correspondence online or update your email addresses, please visit us anytime at https://sportal.uspto.gov/secure/myportal/privatepair.

If you have any questions, please email the Electronic Business Center (EBC) at EBC@uspto.gov with 'e-Office Action' on the subject line or call 1-866-217-9197 during the following hours:

Monday - Friday 6:00 a.m. to 12:00 a.m.

Thank you for prompt attention to this notice,

UNITED STATES PATENT AND TRADEMARK OFFICE

PATENT APPLICATION INFORMATION RETRIEVAL SYSTEM

UNITED STATES PATENT AND TRADEMARK OFFICE

UNITED STATES DEPARTMENT OF COMMERCE
United States Patent and Trademark Office
Address: COMMISSIONER FOR PATENTS
P.O. Box 1450
Alexandria, Virginia 22313-1450
www.uspto.gov

NOTICE OF ALLOWANCE AND FEE(S) DUE

70408 7590 04/12/2017
FOX C/O WAGNER BLECHER LLP
123 WESTRIDGE DRIVE
WATSONVILLE, CA 95076

EXAMINER
SAHNI, VISHAL R

ART UNIT	PAPER NUMBER
3657	

DATE MAILED: 04/12/2017

APPLICATION NO.	FILING DATE	FIRST NAMED INVENTOR	ATTORNEY DOCKET NO.	CONFIRMATION NO.
14/822,859	08/10/2015	William M. Becker	FOX-P5-08-12-US.CON	6345

TITLE OF INVENTION: METHOD AND APPARATUS FOR AN ADJUSTABLE DAMPER

APPLN. TYPE	ENTITY STATUS	ISSUE FEE DUE	PUBLICATION FEE DUE	PREV. PAID ISSUE FEE	TOTAL FEE(S) DUE	DATE DUE
nonprovisional	UNDISCOUNTED	$960	$0	$0	$960	07/12/2017

THE APPLICATION IDENTIFIED ABOVE HAS BEEN EXAMINED AND IS ALLOWED FOR ISSUANCE AS A PATENT. PROSECUTION ON THE MERITS IS CLOSED. THIS NOTICE OF ALLOWANCE IS NOT A GRANT OF PATENT RIGHTS. THIS APPLICATION IS SUBJECT TO WITHDRAWAL FROM ISSUE AT THE INITIATIVE OF THE OFFICE OR UPON PETITION BY THE APPLICANT. SEE 37 CFR 1.313 AND MPEP 1308.

THE ISSUE FEE AND PUBLICATION FEE (IF REQUIRED) MUST BE PAID WITHIN THREE MONTHS FROM THE MAILING DATE OF THIS NOTICE OR THIS APPLICATION SHALL BE REGARDED AS ABANDONED. THIS STATUTORY PERIOD CANNOT BE EXTENDED. SEE 35 U.S.C. 151. THE ISSUE FEE DUE INDICATED ABOVE DOES NOT REFLECT A CREDIT FOR ANY PREVIOUSLY PAID ISSUE FEE IN THIS APPLICATION. IF AN ISSUE FEE HAS PREVIOUSLY BEEN PAID IN THIS APPLICATION (AS SHOWN ABOVE), THE RETURN OF PART B OF THIS FORM WILL BE CONSIDERED A REQUEST TO REAPPLY THE PREVIOUSLY PAID ISSUE FEE TOWARD THE ISSUE FEE NOW DUE.

HOW TO REPLY TO THIS NOTICE:

I. Review the ENTITY STATUS shown above. If the ENTITY STATUS is shown as SMALL or MICRO, verify whether entitlement to that entity status still applies.

If the ENTITY STATUS is the same as shown above, pay the TOTAL FEE(S) DUE shown above.

If the ENTITY STATUS is changed from that shown above, on PART B - FEE(S) TRANSMITTAL, complete section number 5 titled "Change in Entity Status (from status indicated above)".

For purposes of this notice, small entity fees are 1/2 the amount of undiscounted fees, and micro entity fees are 1/2 the amount of small entity fees.

II. PART B - FEE(S) TRANSMITTAL, or its equivalent, must be completed and returned to the United States Patent and Trademark Office (USPTO) with your ISSUE FEE and PUBLICATION FEE (if required). If you are charging the fee(s) to your deposit account, section "4b" of Part B - Fee(s) Transmittal should be completed and an extra copy of the form should be submitted. If an equivalent of Part B is filed, a request to reapply a previously paid issue fee must be clearly made, and delays in processing may occur due to the difficulty in recognizing the paper as an equivalent of Part B.

III. All communications regarding this application must give the application number. Please direct all communications prior to issuance to Mail Stop ISSUE FEE unless advised to the contrary.

IMPORTANT REMINDER: Utility patents issuing on applications filed on or after Dec. 12, 1980 may require payment of maintenance fees. It is patentee's responsibility to ensure timely payment of maintenance fees when due.

PTOL-85 (Rev. 02/11)

PART B - FEE(S) TRANSMITTAL

Complete and send this form, together with applicable fee(s), to: Mail **Mail Stop ISSUE FEE**
Commissioner for Patents
P.O. Box 1450
Alexandria, Virginia 22313-1450
or Fax (571)-273-2885

INSTRUCTIONS: This form should be used for transmitting the ISSUE FEE and PUBLICATION FEE (if required). Blocks 1 through 5 should be completed where appropriate. All further correspondence including the Patent, advance orders and notification of maintenance fees will be mailed to the current correspondence address as indicated unless corrected below or directed otherwise in Block 1, by (a) specifying a new correspondence address; and/or (b) indicating a separate "FEE ADDRESS" for maintenance fee notifications.

CURRENT CORRESPONDENCE ADDRESS (Note: Use Block 1 for any change of address)

70408 7590 04/12/2017
FOX C/O WAGNER BLECHER LLP
123 WESTRIDGE DRIVE
WATSONVILLE, CA 95076

Note: A certificate of mailing can only be used for domestic mailings of the Fee(s) Transmittal. This certificate cannot be used for any other accompanying papers. Each additional paper, such as an assignment or formal drawing, must have its own certificate of mailing or transmission.

Certificate of Mailing or Transmission
I hereby certify that this Fee(s) Transmittal is being deposited with the United States Postal Service with sufficient postage for first class mail in an envelope addressed to the Mail Stop ISSUE FEE address above, or being facsimile transmitted to the USPTO (571) 273-2885, on the date indicated below.

(Depositor's name)
(Signature)
(Date)

APPLICATION NO.	FILING DATE	FIRST NAMED INVENTOR	ATTORNEY DOCKET NO.	CONFIRMATION NO.
14/822,859	08/10/2015	William M. Becker	FOX-P5-08-12-US.CON	6345

TITLE OF INVENTION: METHOD AND APPARATUS FOR AN ADJUSTABLE DAMPER

APPLN. TYPE	ENTITY STATUS	ISSUE FEE DUE	PUBLICATION FEE DUE	PREV. PAID ISSUE FEE	TOTAL FEE(S) DUE	DATE DUE
nonprovisional	UNDISCOUNTED	$960	$0	$0	$960	07/12/2017

EXAMINER	ART UNIT	CLASS-SUBCLASS
SAHNI, VISHAL R	3657	188-322130

1. Change of correspondence address or indication of "Fee Address" (37 CFR 1.363).
- ❑ Change of correspondence address (or Change of Correspondence Address form PTO/SB/122) attached.
- ❑ "Fee Address" indication (or "Fee Address" Indication form PTO/SB/47; Rev 03-02 or more recent) attached. **Use of a Customer Number is required.**

2. For printing on the patent front page, list
(1) The names of up to 3 registered patent attorneys or agents OR, alternatively,
(2) The name of a single firm (having as a member a registered attorney or agent) and the names of up to 2 registered patent attorneys or agents. If no name is listed, no name will be printed.
1_____
2_____
3_____

3. ASSIGNEE NAME AND RESIDENCE DATA TO BE PRINTED ON THE PATENT (print or type)

PLEASE NOTE: Unless an assignee is identified below, no assignee data will appear on the patent. If an assignee is identified below, the document has been filed for recordation as set forth in 37 CFR 3.11. Completion of this form is NOT a substitute for filing an assignment.

(A) NAME OF ASSIGNEE (B) RESIDENCE: (CITY and STATE OR COUNTRY)

Please check the appropriate assignee category or categories (will not be printed on the patent) : ❑ Individual ❑ Corporation or other private group entity ❑ Government

4a. The following fee(s) are submitted:
- ❑ Issue Fee
- ❑ Publication Fee (No small entity discount permitted)
- ❑ Advance Order - # of Copies _____

4b. Payment of Fee(s): **(Please first reapply any previously paid issue fee shown above)**
- ❑ A check is enclosed.
- ❑ Payment by credit card. Form PTO-2038 is attached.
- ❑ The director is hereby authorized to charge the required fee(s), any deficiency, or credits any overpayment, to Deposit Account Number _____ (enclose an extra copy of this form).

5. **Change in Entity Status** (from status indicated above)
- ❑ Applicant certifying micro entity status. See 37 CFR 1.29 — NOTE: Absent a valid certification of Micro Entity Status (see forms PTO/SB/15A and 15B), issue fee payment in the micro entity amount will not be accepted at the risk of application abandonment.
- ❑ Applicant asserting small entity status. See 37 CFR 1.27 — NOTE: If the application was previously under micro entity status, checking this box will be taken to be a notification of loss of entitlement to micro entity status.
- ❑ Applicant changing to regular undiscounted fee status. — NOTE: Checking this box will be taken to be a notification of loss of entitlement to small or micro entity status, as applicable.

NOTE: This form must be signed in accordance with 37 CFR 1.31 and 1.33. See 37 CFR 1.4 for signature requirements and certifications.

Authorized Signature _____ Date _____

Typed or printed name _____ Registration No. _____

PTOL-85 Part B (10-13) Approved for use through 10/31/2013. OMB 0651-0033 U.S. Patent and Trademark Office; U.S. DEPARTMENT OF COMMERCE

UNITED STATES PATENT AND TRADEMARK OFFICE

UNITED STATES DEPARTMENT OF COMMERCE
United States Patent and Trademark Office
Address: COMMISSIONER FOR PATENTS
P.O. Box 1450
Alexandria, Virginia 22313-1450
www.uspto.gov

APPLICATION NO.	FILING DATE	FIRST NAMED INVENTOR	ATTORNEY DOCKET NO.	CONFIRMATION NO.
14/822,859	08/10/2015	William M. Becker	FOX-P5-08-12-US.CON	6345

70408 7590 04/12/2017
FOX C/O WAGNER BLECHER LLP
123 WESTRIDGE DRIVE
WATSONVILLE, CA 95076

EXAMINER
SAHNI, VISHAL R

ART UNIT	PAPER NUMBER
3657	

DATE MAILED: 04/12/2017

Determination of Patent Term Adjustment under 35 U.S.C. 154 (b)
(Applications filed on or after May 29, 2000)

The Office has discontinued providing a Patent Term Adjustment (PTA) calculation with the Notice of Allowance.

Section 1(h)(2) of the AIA Technical Corrections Act amended 35 U.S.C. 154(b)(3)(B)(i) to eliminate the requirement that the Office provide a patent term adjustment determination with the notice of allowance. See Revisions to Patent Term Adjustment, 78 Fed. Reg. 19416, 19417 (Apr. 1, 2013). Therefore, the Office is no longer providing an initial patent term adjustment determination with the notice of allowance. The Office will continue to provide a patent term adjustment determination with the Issue Notification Letter that is mailed to applicant approximately three weeks prior to the issue date of the patent, and will include the patent term adjustment on the patent. Any request for reconsideration of the patent term adjustment determination (or reinstatement of patent term adjustment) should follow the process outlined in 37 CFR 1.705.

Any questions regarding the Patent Term Extension or Adjustment determination should be directed to the Office of Patent Legal Administration at (571)-272-7702. Questions relating to issue and publication fee payments should be directed to the Customer Service Center of the Office of Patent Publication at 1-(888)-786-0101 or (571)-272-4200.

OMB Clearance and PRA Burden Statement for PTOL-85 Part B

The Paperwork Reduction Act (PRA) of 1995 requires Federal agencies to obtain Office of Management and Budget approval before requesting most types of information from the public. When OMB approves an agency request to collect information from the public, OMB (i) provides a valid OMB Control Number and expiration date for the agency to display on the instrument that will be used to collect the information and (ii) requires the agency to inform the public about the OMB Control Number's legal significance in accordance with 5 CFR 1320.5(b).

The information collected by PTOL-85 Part B is required by 37 CFR 1.311. The information is required to obtain or retain a benefit by the public which is to file (and by the USPTO to process) an application. Confidentiality is governed by 35 U.S.C. 122 and 37 CFR 1.14. This collection is estimated to take 12 minutes to complete, including gathering, preparing, and submitting the completed application form to the USPTO. Time will vary depending upon the individual case. Any comments on the amount of time you require to complete this form and/or suggestions for reducing this burden, should be sent to the Chief Information Officer, U.S. Patent and Trademark Office, U.S. Department of Commerce, P.O. Box 1450, Alexandria, Virginia 22313-1450. DO NOT SEND FEES OR COMPLETED FORMS TO THIS ADDRESS. SEND TO: Commissioner for Patents, P.O. Box 1450, Alexandria, Virginia 22313-1450. Under the Paperwork Reduction Act of 1995, no persons are required to respond to a collection of information unless it displays a valid OMB control number.

Privacy Act Statement

The Privacy Act of 1974 (P.L. 93-579) requires that you be given certain information in connection with your submission of the attached form related to a patent application or patent. Accordingly, pursuant to the requirements of the Act, please be advised that: (1) the general authority for the collection of this information is 35 U.S.C. 2(b)(2); (2) furnishing of the information solicited is voluntary; and (3) the principal purpose for which the information is used by the U.S. Patent and Trademark Office is to process and/or examine your submission related to a patent application or patent. If you do not furnish the requested information, the U.S. Patent and Trademark Office may not be able to process and/or examine your submission, which may result in termination of proceedings or abandonment of the application or expiration of the patent.

The information provided by you in this form will be subject to the following routine uses:

1. The information on this form will be treated confidentially to the extent allowed under the Freedom of Information Act (5 U.S.C. 552) and the Privacy Act (5 U.S.C 552a). Records from this system of records may be disclosed to the Department of Justice to determine whether disclosure of these records is required by the Freedom of Information Act.
2. A record from this system of records may be disclosed, as a routine use, in the course of presenting evidence to a court, magistrate, or administrative tribunal, including disclosures to opposing counsel in the course of settlement negotiations.
3. A record in this system of records may be disclosed, as a routine use, to a Member of Congress submitting a request involving an individual, to whom the record pertains, when the individual has requested assistance from the Member with respect to the subject matter of the record.
4. A record in this system of records may be disclosed, as a routine use, to a contractor of the Agency having need for the information in order to perform a contract. Recipients of information shall be required to comply with the requirements of the Privacy Act of 1974, as amended, pursuant to 5 U.S.C. 552a(m).
5. A record related to an International Application filed under the Patent Cooperation Treaty in this system of records may be disclosed, as a routine use, to the International Bureau of the World Intellectual Property Organization, pursuant to the Patent Cooperation Treaty.
6. A record in this system of records may be disclosed, as a routine use, to another federal agency for purposes of National Security review (35 U.S.C. 181) and for review pursuant to the Atomic Energy Act (42 U.S.C. 218(c)).
7. A record from this system of records may be disclosed, as a routine use, to the Administrator, General Services, or his/her designee, during an inspection of records conducted by GSA as part of that agency's responsibility to recommend improvements in records management practices and programs, under authority of 44 U.S.C. 2904 and 2906. Such disclosure shall be made in accordance with the GSA regulations governing inspection of records for this purpose, and any other relevant (i.e., GSA or Commerce) directive. Such disclosure shall not be used to make determinations about individuals.
8. A record from this system of records may be disclosed, as a routine use, to the public after either publication of the application pursuant to 35 U.S.C. 122(b) or issuance of a patent pursuant to 35 U.S.C. 151. Further, a record may be disclosed, subject to the limitations of 37 CFR 1.14, as a routine use, to the public if the record was filed in an application which became abandoned or in which the proceedings were terminated and which application is referenced by either a published application, an application open to public inspection or an issued patent.
9. A record from this system of records may be disclosed, as a routine use, to a Federal, State, or local law enforcement agency, if the USPTO becomes aware of a violation or potential violation of law or regulation.

Notice of Allowability	Application No. 14/822,859	Applicant(s) BECKER, WILLIAM M.	
	Examiner VISHAL SAHNI	Art Unit 3657	AIA (First Inventor to File) Status No

-- The MAILING DATE of this communication appears on the cover sheet with the correspondence address--

All claims being allowable, PROSECUTION ON THE MERITS IS (OR REMAINS) CLOSED in this application. If not included herewith (or previously mailed), a Notice of Allowance (PTOL-85) or other appropriate communication will be mailed in due course. **THIS NOTICE OF ALLOWABILITY IS NOT A GRANT OF PATENT RIGHTS.** This application is subject to withdrawal from issue at the initiative of the Office or upon petition by the applicant. See 37 CFR 1.313 and MPEP 1308.

1. ☒ This communication is responsive to *the RCE filed 03/02/17*.
   ☐ A declaration(s)/affidavit(s) under **37 CFR 1.130(b)** was/were filed on_____.
2. ☐ An election was made by the applicant in response to a restriction requirement set forth during the interview on _____; the restriction requirement and election have been incorporated into this action.
3. ☒ The allowed claim(s) is/are *1 and 3-9*. As a result of the allowed claim(s), you may be eligible to benefit from the **Patent Prosecution Highway** program at a participating intellectual property office for the corresponding application. For more information, please see http://www.uspto.gov/patents/init_events/pph/index.jsp or send an inquiry to PPHfeedback@uspto.gov.
4. ☐ Acknowledgment is made of a claim for foreign priority under 35 U.S.C. § 119(a)-(d) or (f).

   Certified copies:

   a) ☐ All b) ☐ Some *c) ☐ None of the:
   1. ☐ Certified copies of the priority documents have been received.
   2. ☐ Certified copies of the priority documents have been received in Application No. _____ .
   3. ☐ Copies of the certified copies of the priority documents have been received in this national stage application from the International Bureau (PCT Rule 17.2(a)).

   * Certified copies not received: _____.

Applicant has THREE MONTHS FROM THE "MAILING DATE" of this communication to file a reply complying with the requirements noted below. Failure to timely comply will result in ABANDONMENT of this application.
THIS THREE-MONTH PERIOD IS NOT EXTENDABLE.

5. ☐ CORRECTED DRAWINGS (as "replacement sheets") must be submitted.
   ☐ including changes required by the attached Examiner's Amendment / Comment or in the Office action of Paper No./Mail Date _____.

   Identifying indicia such as the application number (see 37 CFR 1.84(c)) should be written on the drawings in the front (not the back) of each sheet. Replacement sheet(s) should be labeled as such in the header according to 37 CFR 1.121(d).
6. ☐ DEPOSIT OF and/or INFORMATION about the deposit of BIOLOGICAL MATERIAL must be submitted. Note the attached Examiner's comment regarding REQUIREMENT FOR THE DEPOSIT OF BIOLOGICAL MATERIAL.

Attachment(s)

1. ☐ Notice of References Cited (PTO-892)
2. ☐ Information Disclosure Statements (PTO/SB/08), Paper No./Mail Date _____
3. ☐ Examiner's Comment Regarding Requirement for Deposit of Biological Material
4. ☐ Interview Summary (PTO-413), Paper No./Mail Date _____ .
5. ☐ Examiner's Amendment/Comment
6. ☐ Examiner's Statement of Reasons for Allowance
7. ☐ Other _____.

/VISHAL SAHNI/
Primary Examiner, Art Unit 3657

Search Notes	Application/Control No.	Applicant(s)/Patent Under Reexamination
	14822859	BECKER, WILLIAM M.
	Examiner	**Art Unit**
	VISHAL SAHNI	3657

CPC- SEARCHED

Symbol	Date	Examiner
F16F9/34,346,3465,435; B62K2025/048	9/28/2015	VRS
F16F9/34,346,3465,435; B62K2025/048	8/9/2016	VRS
F16F9/34,346,3465,435; B62K2025/048	11/20/2016	VRS
F16F9/34,346,3465,435; B62K2025/048	3/3/2017	VRS

CPC COMBINATION SETS - SEARCHED

Symbol	Date	Examiner

US CLASSIFICATION SEARCHED

Class	Subclass	Date	Examiner

SEARCH NOTES

Search Notes	Date	Examiner
Class 188 and 267 term search (see search history)	9/28/2015	VRS

INTERFERENCE SEARCH

US Class/ CPC Symbol	US Subclass / CPC Group	Date	Examiner
ALL	general claim term search	3/3/2017	VRS

EAST Search History

EAST Search History (Prior Art)

Ref #	Hits	Search Query	DBs	Default Operator	Plurals	Time Stamp
L2	122	(F16F9/34,346,3465.cpc. or B62K2025/048.cpc. or 188/322.13,322.19-322.21.ccls. or 267/64.18,64.22,64.26.ccls.) and (fork) and bleed$3	US-PGPUB; USPAT; USOCR; FPRS; EPO; JPO; DERWENT; IBM_TDB	OR	OFF	2017/03/03 12:58
L3	37	(F16F9/34,346,3465.cpc. or B62K2025/048.cpc. or 188/322.13,322.19-322.21.ccls. or 267/64.18,64.22,64.26.ccls.) and (becker.in. near2 william)	US-PGPUB; USPAT; USOCR; FPRS; EPO; JPO; DERWENT; IBM_TDB	OR	OFF	2017/03/03 12:58
L4	1	((air adj bleed) and ambient and valve and (lower adj fork) and (oil adj bath)).clm.	US-PGPUB; USPAT; USOCR; FPRS; EPO; JPO; DERWENT; IBM_TDB	OR	OFF	2017/03/03 12:59
L5	1	((air adj bleed) and ambient and valve and (lower adj fork) and (oil adj bath) and (fluid adj passage)).clm.	US-PGPUB; USPAT; USOCR; FPRS; EPO; JPO; DERWENT; IBM_TDB	OR	OFF	2017/03/03 13:01
L6	0	((air adj bleed) and ambient and valve and (lower adj fork) and (oil adj bath) and (fluid adj passage) and trapped).clm.	US-PGPUB; USPAT; USOCR; FPRS; EPO; JPO; DERWENT; IBM_TDB	OR	OFF	2017/03/03 13:01
S1	3	"20130134687"	US-PGPUB; USPAT; USOCR; FPRS; EPO; JPO; DERWENT; IBM_TDB	OR	OFF	2015/01/05 14:26
S2	2	"20130319805"	US-PGPUB; USPAT; USOCR; FPRS; EPO; JPO; DERWENT; IBM_TDB	OR	OFF	2015/01/05 14:39
S3	126	"188".clas. and fork and bleed and valve	US-PGPUB;	OR	OFF	2015/01/05

		and spring	USPAT; USOCR; FPRS; EPO; JPO; DERWENT; IBM_TDB			14:54
S4	28	"188".clas. and fork.ab. and bleed and valve and spring	US-PGPUB; USPAT; USOCR; FPRS; EPO; JPO; DERWENT; IBM_TDB	OR	OFF	2015/01/05 14:55
S5	22	"188".clas. and fork and bleed and valve and spring and elevation	US-PGPUB; USPAT; USOCR; FPRS; EPO; JPO; DERWENT; IBM_TDB	OR	OFF	2015/01/05 15:03
S6	74	"188".clas. and bleed.ab. and valve and spring	US-PGPUB; USPAT; USOCR; FPRS; EPO; JPO; DERWENT; IBM_TDB	OR	OFF	2015/01/05 15:50
S7	11	(188/322.13,322.19-322.21.ccls. or 267/64.18,64.22,64.26.ccls.) and bleed.ab. and valve and spring	US-PGPUB; USPAT; USOCR; FPRS; EPO; JPO; DERWENT; IBM_TDB	OR	OFF	2015/01/05 15:57
S9	3	"188".clas. and seal and (diametrical adj recess)	US-PGPUB; USPAT; USOCR; FPRS; EPO; JPO; DERWENT; IBM_TDB	OR	OFF	2015/01/05 16:34
S10	0	schrader and seal and (diametrical adj recess)	US-PGPUB; USPAT; USOCR; FPRS; EPO; JPO; DERWENT; IBM_TDB	OR	OFF	2015/01/05 16:35
S11	10	schrader and (seal near recess)	US-PGPUB; USPAT; USOCR; FPRS; EPO; JPO; DERWENT; IBM_TDB	OR	OFF	2015/01/05 16:36
S12	72	schrader and (seal near (mov$3 or adjust$3 or push$3 or shift$3))	US-PGPUB; USPAT; USOCR; FPRS; EPO; JPO; DERWENT;	OR	OFF	2015/01/05 16:37

			IBM_TDB			
S13	1553	(o-ring near (mov$3 or adjust$3 or push$3 or shift$3))	US-PGPUB; USPAT; USOCR; FPRS; EPO; JPO; DERWENT; IBM_TDB	OR	OFF	2015/01/05 16:39
S14	34	(o-ring near (mov$3 or adjust$3 or push$3 or shift$3) near (open$3 or clos$3))	US-PGPUB; USPAT; USOCR; FPRS; EPO; JPO; DERWENT; IBM_TDB	OR	OFF	2015/01/05 16:39
S15	50	becker-william-m.in.	US-PGPUB; USPAT; USOCR; FPRS; EPO; JPO; DERWENT; IBM_TDB	OR	OFF	2015/01/05 20:59
S16	15	becker-william-m.in. and o-ring	US-PGPUB; USPAT; USOCR; FPRS; EPO; JPO; DERWENT; IBM_TDB	OR	OFF	2015/01/05 20:59
S17	25	(188/322.13,322.19-322.21.ccls. or 267/64.18,64.22,64.26.ccls.) and bleed and valve and spring and fork	US-PGPUB; USPAT; USOCR; FPRS; EPO; JPO; DERWENT; IBM_TDB	OR	OFF	2015/03/27 12:01
S18	77	(F16F9/34,346,3465.cpc. or B62K2025/048.cpc.) and bleed and valve and spring and fork	US-PGPUB; USPAT; USOCR; FPRS; EPO; JPO; DERWENT; IBM_TDB	OR	OFF	2015/03/27 12:06
S19	13	(188/322.13,322.19-322.21.ccls. or 267/64.18,64.22,64.26.ccls.) and bleed.ab. and valve and spring	US-PGPUB; USPAT; USOCR; FPRS; EPO; JPO; DERWENT; IBM_TDB	OR	OFF	2015/03/27 12:06
S20	14	(F16F9/34,346,3465.cpc. or B62K2025/048.cpc.) and becker-william-m.in.	US-PGPUB; USPAT; USOCR; FPRS; EPO; JPO; DERWENT; IBM_TDB	OR	OFF	2015/03/27 12:08
S21	0	(fork and (air adj bleed) and gap and oil and damper and seal).clm.	US-PGPUB; USPAT; USOCR; FPRS; EPO;	OR	OFF	2015/03/27 12:09

			JPO; DERWENT; IBM_TDB			
S22	0	(fork and (air and bleed) and gap and oil and damper and seal).clm.	US-PGPUB; USPAT; USOCR; FPRS; EPO; JPO; DERWENT; IBM_TDB	OR	OFF	2015/03/27 12:10
S23	15	(F16F9/34,346,3465,435.cpc. or B62K2025/048.cpc.) and becker-william-m.in.	US-PGPUB; USPAT; USOCR; FPRS; EPO; JPO; DERWENT; IBM_TDB	OR	OFF	2015/03/27 12:14
S24	5	(F16F9/435.cpc.) and (air and bleed)	US-PGPUB; USPAT; USOCR; FPRS; EPO; JPO; DERWENT; IBM_TDB	OR	OFF	2015/03/27 12:15
S25	1	"13890753"	USPAT	OR	OFF	2015/09/28 12:12
S26	148	(F16F9/34,346,3465.cpc. or B62K2025/048.cpc.) and bleed and valve	US-PGPUB; USPAT; USOCR; FPRS; EPO; JPO; DERWENT; IBM_TDB	OR	OFF	2015/09/28 13:44
S27	41	(F16F9/34,346,3465.cpc. or B62K2025/048.cpc.) and bleed and valve and (manual$2)	US-PGPUB; USPAT; USOCR; FPRS; EPO; JPO; DERWENT; IBM_TDB	OR	OFF	2015/09/28 13:44
S28	15	(188/322.13,322.19-322.21.ccls. or 267/64.18,64.22,64.26.ccls.) and bleed.ab. and valve	US-PGPUB; USPAT; USOCR; FPRS; EPO; JPO; DERWENT; IBM_TDB	OR	OFF	2015/09/28 13:44
S29	14	("5503258" | "5697477" | "5816281" | "5853071" | "6592136" | "7255210" | "8480064" | "9103400" | "20030001358" | "20060289258" | "20100186836" | "20120007327" | "20120080279" | "20130319805").PN.	US-PGPUB; USPAT	OR	OFF	2016/02/16 21:21
S30	1	"20130319805"	USPAT	OR	OFF	2016/02/16 21:24
S31	10	(F16F9/34,346,3465.cpc. or B62K2025/048.cpc.) and (bleed adj valve$1)	US-PGPUB; USPAT; USOCR; FPRS; EPO; JPO;	OR	OFF	2016/02/16 21:34

			DERWENT; IBM_TDB			
S32	19	(F16F9/34,346,3465.cpc. or B62K2025/048.cpc.) and (bleed$3 near valve$1)	US-PGPUB; USPAT; USOCR; FPRS; EPO; JPO; DERWENT; IBM_TDB	OR	OFF	2016/02/16 21:35
S33	77	(F16F9/34,346,3465.cpc. or B62K2025/048.cpc.) and (bleed$3) and fork and (air or gas) and oil	US-PGPUB; USPAT; USOCR; FPRS; EPO; JPO; DERWENT; IBM_TDB	OR	OFF	2016/08/08 23:59
S34	89	(F16F9/34,346,3465.cpc. or B62K2025/048.cpc.) and (bleed$3) and fork and (air or gas) and (hydraulic or oil)	US-PGPUB; USPAT; USOCR; FPRS; EPO; JPO; DERWENT; IBM_TDB	OR	OFF	2016/08/08 23:59
S35	35	(suspension and fork).ab. and (bleed$3) and (air or gas) and (hydraulic or oil)	US-PGPUB; USPAT; USOCR; FPRS; EPO; JPO; DERWENT; IBM_TDB	OR	OFF	2016/08/09 14:41
S36	110	(suspension or fork).ab. and suspension and fork and (bleed$3) and (air or gas) and (hydraulic or oil)	US-PGPUB; USPAT; USOCR; FPRS; EPO; JPO; DERWENT; IBM_TDB	OR	OFF	2016/08/09 14:54
S37	257	(suspension or fork).ab. and fox and suspension and fork	US-PGPUB; USPAT; USOCR; FPRS; EPO; JPO; DERWENT; IBM_TDB	OR	OFF	2016/08/09 15:08
S38	152	(suspension or fork).ab. and fox and suspension and fork and (oil or hydraulic) and (gas or air)	US-PGPUB; USPAT; USOCR; FPRS; EPO; JPO; DERWENT; IBM_TDB	OR	OFF	2016/08/09 15:08
S39	68	(suspension or fork).ab. and fox and suspension and fork and (oil or hydraulic) and (gas or air) and bleed$3	US-PGPUB; USPAT; USOCR; FPRS; EPO; JPO; DERWENT; IBM_TDB	OR	OFF	2016/08/09 15:09
S40	32	(suspension or fork).ab. and becker.in. and suspension and fork and (oil or hydraulic) and (gas or air) and bleed$3	US-PGPUB; USPAT; USOCR;	OR	OFF	2016/08/09 16:10

			FPRS; EPO; JPO; DERWENT; IBM_TDB			
S41	1	((air adj bleed) and valve and (lower adj fork) and (oil adj bath)).clm.	US-PGPUB; USPAT; USOCR; FPRS; EPO; JPO; DERWENT; IBM_TDB	OR	OFF	2016/08/09 16:17
S42	78	"6592136"	USPAT	OR	OFF	2016/08/09 17:09
S43	3	"13890753"	US-PGPUB; USPAT; USOCR; FPRS; EPO; JPO; DERWENT; IBM_TDB	OR	OFF	2016/08/09 19:09
S44	5	("2012/0007327").URPN.	USPAT	OR	OFF	2016/11/20 02:22
S45	21	("20070080515" | "20090267316" | "20100109277" | "20100252972" | "20100276906" | "20110202236" | "20120007327" | "20120080279" | "20120136537" | "3837355" | "5511811" | "5887857" | "5961102" | "5971117" | "6105988" | "6135434" | "6213261" | "6328292" | "6520524" | "7284766" | "7374028").PN. OR ("9057416").URPN.	US-PGPUB; USPAT; USOCR	OR	OFF	2016/11/20 02:23
S46	102	(F16F9/34,346,3465.cpc. or B62K2025/048.cpc. or 188/322.13,322.19-322.21.ccls. or 267/64.18,64.22,64.26.ccls.) and (bleed$3) and fork and (air or gas) and (hydraulic or oil)	US-PGPUB; USPAT; USOCR; FPRS; EPO; JPO; DERWENT; IBM_TDB	OR	OFF	2016/11/20 02:26
S47	2483	(fork).ab. and (oil or hydraulic) and (gas or air)	US-PGPUB; USPAT; USOCR; FPRS; EPO; JPO; DERWENT; IBM_TDB	OR	OFF	2016/11/20 02:34
S48	14	(lower adj fork).ab. and (oil or hydraulic) and (gas or air)	US-PGPUB; USPAT; USOCR; FPRS; EPO; JPO; DERWENT; IBM_TDB	OR	OFF	2016/11/20 02:34
S49	90	(F16F9/34,346,3465.cpc. or B62K2025/048.cpc. or 188/322.13,322.19-322.21.ccls. or 267/64.18,64.22,64.26.ccls.) and (fork).ab. and (oil or hydraulic) and (gas or air)	US-PGPUB; USPAT; USOCR; FPRS; EPO; JPO; DERWENT; IBM_TDB	OR	OFF	2016/11/20 02:34
S50	67	(F16F9/34,346,3465.cpc. or	US-PGPUB;	OR	OFF	2016/11/20

		B62K2025/048.cpc. or 188/322.13,322.19-322.21.ccls. or 267/64.18,64.22,64.26.ccls.) and (low$2 near5 fork) and (floating adj piston)	USPAT; USOCR; FPRS; EPO; JPO; DERWENT; IBM_TDB			02:41
S51	93	(F16F9/34,346,3465.cpc. or B62K2025/048.cpc. or 188/322.13,322.19-322.21.ccls. or 267/64.18,64.22,64.26.ccls.) and (low$2 near5 fork) and bleed$3	US-PGPUB; USPAT; USOCR; FPRS; EPO; JPO; DERWENT; IBM_TDB	OR	OFF	2016/11/20 02:44
S52	86	(oil or hydraulic) and (gas or air) and (low$2 near5 fork) and bleed$3 and "188".clas.	US-PGPUB; USPAT; USOCR; FPRS; EPO; JPO; DERWENT; IBM_TDB	OR	OFF	2016/11/20 02:51
S53	3261	(oil or hydraulic) and (gas or air) and (low$2 near5 fork) (floating adj piston) and "188".clas.	US-PGPUB; USPAT; USOCR; FPRS; EPO; JPO; DERWENT; IBM_TDB	OR	OFF	2016/11/20 15:44
S54	69	(oil or hydraulic) and (gas or air) and (low$2 near5 fork) and (floating adj piston) and "188".clas.	US-PGPUB; USPAT; USOCR; FPRS; EPO; JPO; DERWENT; IBM_TDB	OR	OFF	2016/11/20 15:44
S55	20	(oil or hydraulic) and (gas or air) and (fork).ab. and (floating adj piston) and "188".clas.	US-PGPUB; USPAT; USOCR; FPRS; EPO; JPO; DERWENT; IBM_TDB	OR	OFF	2016/11/20 15:49
S56	46	(F16F9/34,346,3465.cpc. or B62K2025/048.cpc. or 188/322.13,322.19-322.21.ccls. or 267/64.18,64.22,64.26.ccls.) and (fork).ab. and bleed$3	US-PGPUB; USPAT; USOCR; FPRS; EPO; JPO; DERWENT; IBM_TDB	OR	OFF	2016/11/20 16:01

3/ 3/ 2017 1:02:12 PM
C:\ Users\ vsahni\ Documents\ EAST\ Workspaces\ 14822859.wsp

Issue Classification	Application/Control No.	Applicant(s)/Patent Under Reexamination
	14822859	BECKER, WILLIAM M.
	Examiner	**Art Unit**
	VISHAL SAHNI	3657

CPC

Symbol					Type	Version
F16F		9	/	435	F	2013-01-01
F16F		9	/	34	A	2013-01-01
B62K		2025	/	048	A	2013-01-01
B62K		25	/	08	I	2013-01-01
			/			
			/			
			/			
			/			
			/			
			/			
			/			
			/			
			/			
			/			
			/			

CPC Combination Sets

Symbol					Type	Set	Ranking	Version
			/					
			/					

(Assistant Examiner)	(Date)	**Total Claims Allowed:** 8	
/VISHAL SAHNI/ Primary Examiner.Art Unit 3657	03/03/17	O.G. Print Claim(s)	O.G. Print Figure
(Primary Examiner)	(Date)	1	3

Issue Classification	Application/Control No.	Applicant(s)/Patent Under Reexamination
	14822859	BECKER, WILLIAM M.
	Examiner	**Art Unit**
	VISHAL SAHNI	3657

US ORIGINAL CLASSIFICATION		INTERNATIONAL CLASSIFICATION	
CLASS	SUBCLASS	CLAIMED	NON-CLAIMED
188	322.13	F 1 6 F 9 / 43 (2006.01.01)	

CROSS REFERENCE(S)					
CLASS	SUBCLASS (ONE SUBCLASS PER BLOCK)				

(Assistant Examiner)	(Date)	Total Claims Allowed: 8	
/VISHAL SAHNI/ Primary Examiner.Art Unit 3657	03/03/17	O.G. Print Claim(s)	O.G. Print Figure
(Primary Examiner)	(Date)	1	3

U.S. Patent and Trademark Office

Part of Paper No. 20170303

Issue Classification	Application/Control No.	Applicant(s)/Patent Under Reexamination
	14822859	BECKER, WILLIAM M.
	Examiner	**Art Unit**
	VISHAL SAHNI	3657

☒ Claims renumbered in the same order as presented by applicant ☐ CPA ☐ T.D. ☐ R.1.47

Final	Original	Final	Original	Final	Original	Final	Original	Final	Original	Final	Original	Final	Original	Final	Original
1	1														
2	3														
3	4														
4	5														
5	6														
6	7														
7	8														
8	9														

		Total Claims Allowed:	
(Assistant Examiner)	(Date)	8	
/VISHAL SAHNI/ Primary Examiner.Art Unit 3657	03/03/17	O.G. Print Claim(s)	O.G. Print Figure
(Primary Examiner)	(Date)	1	3

U.S. Patent and Trademark Office

Part of Paper No. 20170303

To: patents@wagnerblecher.com,,
From: PAIR_eOfficeAction@uspto.gov
Cc: PAIR_eOfficeAction@uspto.gov
Subject: Private PAIR Correspondence Notification for Customer Number 70408

Apr 12, 2017 03:47:35 AM

Dear PAIR Customer:

FOX C/O WAGNER BLECHER LLP
123 WESTRIDGE DRIVE
WATSONVILLE, CA 95076
UNITED STATES

The following USPTO patent application(s) associated with your Customer Number, 70408 , have new outgoing correspondence. This correspondence is now available for viewing in Private PAIR.

The official date of notification of the outgoing correspondence will be indicated on the form PTOL-90 accompanying the correspondence.

Disclaimer:
The list of documents shown below is provided as a courtesy and is not part of the official file wrapper. The content of the images shown in PAIR is the official record.

Application	Document	Mailroom Date	Attorney Docket No.
14822859	NOA	04/12/2017	FOX-P5-08-12-US.CON

To view your correspondence online or update your email addresses, please visit us anytime at https://sportal.uspto.gov/secure/myportal/privatepair.

If you have any questions, please email the Electronic Business Center (EBC) at EBC@uspto.gov with 'e-Office Action' on the subject line or call 1-866-217-9197 during the following hours:

Monday - Friday 6:00 a.m. to 12:00 a.m.

Thank you for prompt attention to this notice,

UNITED STATES PATENT AND TRADEMARK OFFICE

PATENT APPLICATION INFORMATION RETRIEVAL SYSTEM

Document Description: Application Data Sheet to update/correct info
Doc Code: ADS.CORR

CORRECTED ADS FORM

Application Number	14822859
Title of Invention	METHOD AND APPARATUS FOR AN ADJUSTABLE DAMPER

Inventor Information

****If no data is shown, no data has been corrected****

	Data of Record	Updated Data
Order Number		
Name		
Residence Information		
Residency		
City		
State		
Country of Residence		
Mailing Address of Inventor		
Address 1		
Address 2		
City,State/Province, Postal Code		
Country		

Document Description: Application Data Sheet to update/correct info
Doc Code: ADS.CORR

Application Information

	Data of Record	Updated Data
Title of Invention	METHOD AND APPARATUS FOR AN ADJUSTABLE DAMPER	
Attorney Docket Number	FOX-P5-08-12-US.CON	
Entity Type	Regular Undiscounted	

Domestic Benefit/National Stage Information

****If no data is shown, no data has been corrected****

This section allows for the applicant to either claim benefit under 35 U.S.C. 119(e), 120, 121,365(c), or 386(c) or indicate National Stage entry from a PCT application. Providing this information in the application data sheet constitutes the specific reference required by 35 U.S. C. 119(e) or 120, and 37 CFR 1.78(a).

		Data of Record	Updated Data
	Prior Application Status		
	Application Number		
	Continuity Type		
	Prior Application Number		
	Filing Date (YYYY-MM-DD)		
	Patent Number		
	Issue Date (YYYY-MM-DD)		

Foreign Priority Information

Document Description: Application Data Sheet to update/correct info
Doc Code: ADS.CORR

****If no data is shown, no data has been corrected****

This section allows for the applicant to claim priority to a foreign application. Providing this information in the application data sheet constitutes the claim for priority as required by 35 U.S.C. 119(b) and 37 CFR 1.55. When priority is claimed to a foreign application that is eligible for retrieval under the priority document exchange program (PDX) the information will be used by the Office to automatically attempt retrieval pursuant to 37 CFR 1.55(i)(1) and (2). Under the PDX program, applicant bears the ultimate responsibility for ensuring that a copy of the foreign application is received by the Office from the participating foreign intellectual property office, or a certified copy of the foreign priority application is filed, within the time period specified in 37 CFR 1.55(g)(1).

		Data of Record	Updated Data
	Application Number		
	Country		
	Filing Date		
	Access Code		

Applicant Information

****If no data is shown, no data has been corrected****
Providing assignment information in this section does not substitute for compliance with any requirement of part 3 of Title 37 of CFR to have an assignment recorded by the Office.

	Data of Record	Updated Data
Applicant Type	ASG	
If applicant is the legal representative, indicate the authority to file the patent application, the inventor is		
Name of the Deceased or Legally Incapacitated Inventor		
Applicant is an Organization	Yes	
Name		
Organization Name	Fox Factory, Inc.	
Address 1		
Address 2		

City,State/Province,Postal Code	~~Watsonville CA~~	Scotts Valley CA
Country		
Phone Number		
Fax Number		
Email Address		

Assignee Information including Non-Applicant Assignee Information

****If no data is shown, no data has been corrected****
Providing this information in the application data sheet does not substitute for compliance with any requirement of part 3 of Title 37 of the CFR to have an assignment recorded in the Office

	Data of Record	Updated Data
Order		
Applicant is an Organization		
Name		
Organization Name		
Mailing Address		
Address 1		
Address 2		
City,State/Province,Postal Code		
Country		
Phone Number		
Fax Number		
Email Address		

Signature

NOTE: This Application Data Sheet must be signed in accordance with 37 CFR 1.33(b).

This Application Data Sheet **must** be signed by a patent practitioner if one or more of the applicants is a **juristic entity** (e.g., corporation or association). If the applicant is two or more joint inventors, this form must be signed by a patent practitioner, **all** joint inventors who are the applicant, or one or more joint inventor-applicants who have been given power of attorney (e.g., see USPTO Form PTO/AIA/81) on behalf of **all** joint inventor-applicants.

See 37 CFR 1.4(d) for the manner of making signatures and certifications.

Signature	/John P. Wagner, Jr./	Registration Number	35398
First Name	John	Last Name	Wagner

Electronic Acknowledgement Receipt	
EFS ID:	29764849
Application Number:	14822859
International Application Number:	
Confirmation Number:	6345
Title of Invention:	METHOD AND APPARATUS FOR AN ADJUSTABLE DAMPER
First Named Inventor/Applicant Name:	
Customer Number:	70408
Filer:	John Paul Wagner Jr.
Filer Authorized By:	
Attorney Docket Number:	FOX-P5-08-12-US.CON
Receipt Date:	12-JUL-2017
Filing Date:	10-AUG-2015
Time Stamp:	16:55:59
Application Type:	Utility under 35 USC 111(a)

Payment information:

Submitted with Payment	no

File Listing:

Document Number	Document Description	File Name	File Size(Bytes)/ Message Digest	Multi Part /.zip	Pages (if appl.)
1	Application Data Sheet to update/ correct info	CorrectedADS.pdf	64942 646f482d1967d912b454cf79c9de9335722c3110	no	5

Warnings:

Information:	
Total Files Size (in bytes):	64942

This Acknowledgement Receipt evidences receipt on the noted date by the USPTO of the indicated documents, characterized by the applicant, and including page counts, where applicable. It serves as evidence of receipt similar to a Post Card, as described in MPEP 503.

New Applications Under 35 U.S.C. 111
If a new application is being filed and the application includes the necessary components for a filing date (see 37 CFR 1.53(b)-(d) and MPEP 506), a Filing Receipt (37 CFR 1.54) will be issued in due course and the date shown on this Acknowledgement Receipt will establish the filing date of the application.
National Stage of an International Application under 35 U.S.C. 371
If a timely submission to enter the national stage of an international application is compliant with the conditions of 35 U.S.C. 371 and other applicable requirements a Form PCT/DO/EO/903 indicating acceptance of the application as a national stage submission under 35 U.S.C. 371 will be issued in addition to the Filing Receipt, in due course.
New International Application Filed with the USPTO as a Receiving Office
If a new international application is being filed and the international application includes the necessary components for an international filing date (see PCT Article 11 and MPEP 1810), a Notification of the International Application Number and of the International Filing Date (Form PCT/RO/105) will be issued in due course, subject to prescriptions concerning national security, and the date shown on this Acknowledgement Receipt will establish the international filing date of the application.

PART B - FEE(S) TRANSMITTAL

Complete and send this form, together with applicable fee(s), to: Mail **Mail Stop ISSUE FEE**
Commissioner for Patents
P.O. Box 1450
Alexandria, Virginia 22313-1450
or Fax (571)-273-2885

INSTRUCTIONS: This form should be used for transmitting the ISSUE FEE and PUBLICATION FEE (if required). Blocks 1 through 5 should be completed where appropriate. All further correspondence including the Patent, advance orders and notification of maintenance fees will be mailed to the current correspondence address as indicated unless corrected below or directed otherwise in Block 1, by (a) specifying a new correspondence address; and/or (b) indicating a separate "FEE ADDRESS" for maintenance fee notifications.

CURRENT CORRESPONDENCE ADDRESS (Note: Use Block 1 for any change of address)

70408 7590 04/12/2017
FOX C/O WAGNER BLECHER LLP
123 WESTRIDGE DRIVE
WATSONVILLE, CA 95076

Note: A certificate of mailing can only be used for domestic mailings of the Fee(s) Transmittal. This certificate cannot be used for any other accompanying papers. Each additional paper, such as an assignment or formal drawing, must have its own certificate of mailing or transmission.

Certificate of Mailing or Transmission
I hereby certify that this Fee(s) Transmittal is being deposited with the United States Postal Service with sufficient postage for first class mail in an envelope addressed to the Mail Stop ISSUE FEE address above, or being facsimile transmitted to the USPTO (571) 273-2885, on the date indicated below.

Robert Condon	(Depositor's name)
/Robert Condon/	(Signature)
7/12/2017	(Date)

APPLICATION NO.	FILING DATE	FIRST NAMED INVENTOR	ATTORNEY DOCKET NO.	CONFIRMATION NO.
14/822,859	08/10/2015	William M. Becker	FOX-P5-08-12-US.CON	6345

TITLE OF INVENTION: METHOD AND APPARATUS FOR AN ADJUSTABLE DAMPER

APPLN. TYPE	ENTITY STATUS	ISSUE FEE DUE	PUBLICATION FEE DUE	PREV. PAID ISSUE FEE	TOTAL FEE(S) DUE	DATE DUE
nonprovisional	UNDISCOUNTED	$960	$0	$0	$960	07/12/2017

EXAMINER	ART UNIT	CLASS-SUBCLASS
SAHNI, VISHAL R	3657	188-322130

1. Change of correspondence address or indication of "Fee Address" (37 CFR 1.363).
- ☐ Change of correspondence address (or Change of Correspondence Address form PTO/SB/122) attached.
- ☐ "Fee Address" indication (or "Fee Address" Indication form PTO/SB/47; Rev 03-02 or more recent) attached. **Use of a Customer Number is required.**

2. For printing on the patent front page, list
(1) The names of up to 3 registered patent attorneys or agents OR, alternatively,
(2) The name of a single firm (having as a member a registered attorney or agent) and the names of up to 2 registered patent attorneys or agents. If no name is listed, no name will be printed.
1 _____
2 _____
3 _____

3. ASSIGNEE NAME AND RESIDENCE DATA TO BE PRINTED ON THE PATENT (print or type)

PLEASE NOTE: Unless an assignee is identified below, no assignee data will appear on the patent. If an assignee is identified below, the document has been filed for recordation as set forth in 37 CFR 3.11. Completion of this form is NOT a substitute for filing an assignment.

(A) NAME OF ASSIGNEE: Fox Factory, Inc.
(B) RESIDENCE: (CITY and STATE OR COUNTRY): Scotts Valley, CA

Please check the appropriate assignee category or categories (will not be printed on the patent) : ☐ Individual ☑ Corporation or other private group entity ☐ Government

4a. The following fee(s) are submitted:
- ☑ Issue Fee
- ☐ Publication Fee (No small entity discount permitted)
- ☐ Advance Order - # of Copies _____

4b. Payment of Fee(s): **(Please first reapply any previously paid issue fee shown above)**
- ☐ A check is enclosed.
- ☐ Payment by credit card. Form PTO-2038 is attached.
- ☑ The director is hereby authorized to charge the required fee(s), any deficiency, or credits any overpayment, to Deposit Account Number 50-4157 (enclose an extra copy of this form).

5. **Change in Entity Status** (from status indicated above)
- ☐ Applicant certifying micro entity status. See 37 CFR 1.29 — NOTE: Absent a valid certification of Micro Entity Status (see forms PTO/SB/15A and 15B), issue fee payment in the micro entity amount will not be accepted at the risk of application abandonment.
- ☐ Applicant asserting small entity status. See 37 CFR 1.27 — NOTE: If the application was previously under micro entity status, checking this box will be taken to be a notification of loss of entitlement to micro entity status.
- ☐ Applicant changing to regular undiscounted fee status. — NOTE: Checking this box will be taken to be a notification of loss of entitlement to small or micro entity status, as applicable.

NOTE: This form must be signed in accordance with 37 CFR 1.31 and 1.33. See 37 CFR 1.4 for signature requirements and certifications.

Authorized Signature /John P. Wagner, Jr./ Date 7/12/2017
Typed or printed name John P. Wagner, Jr. Registration No. 35,398

PTOL-85 Part B (10-13) Approved for use through 10/31/2013. OMB 0651-0033 U.S. Patent and Trademark Office; U.S. DEPARTMENT OF COMMERCE

Electronic Patent Application Fee Transmittal

Application Number:	14822859
Filing Date:	10-Aug-2015
Title of Invention:	METHOD AND APPARATUS FOR AN ADJUSTABLE DAMPER
First Named Inventor/Applicant Name:	William M. Becker
Filer:	John Paul Wagner Jr./Robert Condon
Attorney Docket Number:	FOX-P5-08-12-US.CON

Filed as Large Entity

Filing Fees for Utility under 35 USC 111(a)

Description	Fee Code	Quantity	Amount	Sub-Total in USD($)
Basic Filing:				
Pages:				
Claims:				
Miscellaneous-Filing:				
Petition:				
Patent-Appeals-and-Interference:				
Post-Allowance-and-Post-Issuance:				
UTILITY APPL ISSUE FEE	1501	1	960	960

Description	Fee Code	Quantity	Amount	Sub-Total in USD($)
Extension-of-Time:				
Miscellaneous:				
			Total in USD ($)	**960**

Electronic Acknowledgement Receipt	
EFS ID:	29765028
Application Number:	14822859
International Application Number:	
Confirmation Number:	6345
Title of Invention:	METHOD AND APPARATUS FOR AN ADJUSTABLE DAMPER
First Named Inventor/Applicant Name:	William M. Becker
Customer Number:	70408
Filer:	John Paul Wagner Jr./Robert Condon
Filer Authorized By:	John Paul Wagner Jr.
Attorney Docket Number:	FOX-P5-08-12-US.CON
Receipt Date:	12-JUL-2017
Filing Date:	10-AUG-2015
Time Stamp:	17:02:54
Application Type:	Utility under 35 USC 111(a)

Payment information:

Submitted with Payment	yes
Payment Type	DA
Payment was successfully received in RAM	$960
RAM confirmation Number	071317INTEFSW00004200504157
Deposit Account	
Authorized User	
The Director of the USPTO is hereby authorized to charge indicated fees and credit any overpayment as follows:	

File Listing:

Document Number	Document Description	File Name	File Size(Bytes)/ Message Digest	Multi Part /.zip	Pages (if appl.)
1		FOX-P5-08-12-USCON_20170712_IFEE.pdf	205207 af89d130b49f6a6e7c1d032146af2d45c82a5b79	yes	2

Multipart Description/PDF files in .zip description		
Document Description	Start	End
Transmittal Letter	1	1
Issue Fee Payment (PTO-85B)	2	2

Warnings:

Information:

2	Fee Worksheet (SB06)	fee-info.pdf	30807 9f183093af6f3da2134ae2e0b46721895dea0efc	no	2

Warnings:

Information:

Total Files Size (in bytes):	236014

This Acknowledgement Receipt evidences receipt on the noted date by the USPTO of the indicated documents, characterized by the applicant, and including page counts, where applicable. It serves as evidence of receipt similar to a Post Card, as described in MPEP 503.

New Applications Under 35 U.S.C. 111
If a new application is being filed and the application includes the necessary components for a filing date (see 37 CFR 1.53(b)-(d) and MPEP 506), a Filing Receipt (37 CFR 1.54) will be issued in due course and the date shown on this Acknowledgement Receipt will establish the filing date of the application.
National Stage of an International Application under 35 U.S.C. 371
If a timely submission to enter the national stage of an international application is compliant with the conditions of 35 U.S.C. 371 and other applicable requirements a Form PCT/DO/EO/903 indicating acceptance of the application as a national stage submission under 35 U.S.C. 371 will be issued in addition to the Filing Receipt, in due course.
New International Application Filed with the USPTO as a Receiving Office
If a new international application is being filed and the international application includes the necessary components for an international filing date (see PCT Article 11 and MPEP 1810), a Notification of the International Application Number and of the International Filing Date (Form PCT/RO/105) will be issued in due course, subject to prescriptions concerning national security, and the date shown on this Acknowledgement Receipt will establish the international filing date of the application.

WAGNER BLECHER LLP
123 Westridge Drive
Watsonville, CA 95076
(408) 377-0500

PATENT APPLICATION

ATTORNEY DOCKET NO. FOX-P5-08-12-US.CON

Inventor(s): William BECKER

Application No.: 14/822,859

Filing Date: August 10, 2015

Confirmation No.: 6345

Examiner: Vishal R. SAHNI

Group Art Unit: 3657

Title: METHOD AND APPARATUS FOR AN ADJUSTABLE DAMPER

Mail Stop Issue Fee
Commissioner For Patents
PO Box 1450
Alexandria, VA 22313-1450

TRANSMITTAL FOR PAYMENT OF ISSUE FEE (37 CFR 1.311)

Applicant hereby pays the issue fee for the attached Issue Fee Transmittal PTOL-85:

☑ Applicant is undiscounted ☐ Applicant is small entity ☐ Applicant is micro entity

FEE CALCULATION

☑ $ 960 Large Entity

☐ $ 480 Small Entity

☐ $ 240 Micro Entity

☐ $ 560 Design

☐ $ Additional Copies X $ 3

Total $ 960

ENCLOSURES

☐ Executed Declaration

☐ _____ sheets of formal drawing(s). Please substitute these formal drawing(s) for the informal drawing(s) originally filed.

☐ Loss of Small Entity Transmittal.

☐ "Fee Address" indication form.

☐

Please charge Deposit Account 50-4157 the sum of $ 960 . At any time during the pendency of this application, please charge any fees required or credit any over payment to Deposit Account 50-4157 pursuant to 37 CFR 1.25. Additionally charge any fees to Deposit Account 50-4157 under 37 CFR 1.16 through 1.21 inclusive, and any other sections in Title 37 of the Code of Federal Regulations that may regulate fees. A duplicate copy of this sheet is enclosed if filed via mail.

☐ I hereby certify that this correspondence is being deposited with the United States Postal Service as first class mail in an envelope addressed to: Commissioner for Patents, Alexandria, VA 22313-1450

☑ I hereby certify that this paper is being transmitted to the Patent and Trademark Office facsimile number (571) 273-8300 or via electronic transmission

Date of Deposit/Transmission: 07/12/2017

Typed Name: Robert Condon

Signature: /Robert Condon/

Respectfully submitted,
Fox Factory, Inc.

By /John P. Wagner, Jr./

John P. Wagner, Jr.

Attorney/Agent for Applicant(s)

Reg No. : 35,398

Date : 07/12/2017

Telephone : 408-377-0500

UNITED STATES PATENT AND TRADEMARK OFFICE

UNITED STATES DEPARTMENT OF COMMERCE
United States Patent and Trademark Office
Address: COMMISSIONER FOR PATENTS
P.O. Box 1450
Alexandria, Virginia 22313-1450
www.uspto.gov

APPLICATION NUMBER	FILING or 371(c) DATE	GRP ART UNIT	FIL FEE REC'D	ATTY.DOCKET.NO	TOT CLAIMS	IND CLAIMS
14/822,859	08/10/2015	3657	1600	FOX-P5-08-12-US.CON	1	1

CONFIRMATION NO. 6345

CORRECTED FILING RECEIPT

70408
FOX C/O WAGNER BLECHER LLP
123 WESTRIDGE DRIVE
WATSONVILLE, CA 95076

OC000000092782611

Date Mailed: 07/17/2017

Receipt is acknowledged of this non-provisional patent application. The application will be taken up for examination in due course. Applicant will be notified as to the results of the examination. Any correspondence concerning the application must include the following identification information: the U.S. APPLICATION NUMBER, FILING DATE, NAME OF APPLICANT, and TITLE OF INVENTION. Fees transmitted by check or draft are subject to collection. Please verify the accuracy of the data presented on this receipt. **If an error is noted on this Filing Receipt, please submit a written request for a Filing Receipt Correction. Please provide a copy of this Filing Receipt with the changes noted thereon. If you received a "Notice to File Missing Parts" for this application, please submit any corrections to this Filing Receipt with your reply to the Notice. When the USPTO processes the reply to the Notice, the USPTO will generate another Filing Receipt incorporating the requested corrections**

Inventor(s)

William M. Becker, Aptos, CA;

Applicant(s)

Fox Factory, Inc., Scotts Valley, CA;

Power of Attorney: The patent practitioners associated with Customer Number 70408

Domestic Priority data as claimed by applicant

This application is a CON of 13/890,753 05/09/2013 PAT 9103400
which claims benefit of 61/644,859 05/09/2012

Foreign Applications for which priority is claimed (You may be eligible to benefit from the **Patent Prosecution Highway** program at the USPTO. Please see http://www.uspto.gov for more information.) - None.
Foreign application information must be provided in an Application Data Sheet in order to constitute a claim to foreign priority. See 37 CFR 1.55 and 1.76.

Permission to Access Application via Priority Document Exchange: No

Permission to Access Search Results: No

Applicant may provide or rescind an authorization for access using Form PTO/SB/39 or Form PTO/SB/69 as appropriate.

If Required, Foreign Filing License Granted: 08/24/2015

The country code and number of your priority application, to be used for filing abroad under the Paris Convention, is **US 14/822,859**

Projected Publication Date: Not Applicable

Non-Publication Request: No

Early Publication Request: No
Title

METHOD AND APPARATUS FOR AN ADJUSTABLE DAMPER

Preliminary Class

188

Statement under 37 CFR 1.55 or 1.78 for AIA (First Inventor to File) Transition Applications: No

PROTECTING YOUR INVENTION OUTSIDE THE UNITED STATES

Since the rights granted by a U.S. patent extend only throughout the territory of the United States and have no effect in a foreign country, an inventor who wishes patent protection in another country must apply for a patent in a specific country or in regional patent offices. Applicants may wish to consider the filing of an international application under the Patent Cooperation Treaty (PCT). An international (PCT) application generally has the same effect as a regular national patent application in each PCT-member country. The PCT process **simplifies** the filing of patent applications on the same invention in member countries, but **does not result** in a grant of "an international patent" and does not eliminate the need of applicants to file additional documents and fees in countries where patent protection is desired.

Almost every country has its own patent law, and a person desiring a patent in a particular country must make an application for patent in that country in accordance with its particular laws. Since the laws of many countries differ in various respects from the patent law of the United States, applicants are advised to seek guidance from specific foreign countries to ensure that patent rights are not lost prematurely.

Applicants also are advised that in the case of inventions made in the United States, the Director of the USPTO must issue a license before applicants can apply for a patent in a foreign country. The filing of a U.S. patent application serves as a request for a foreign filing license. The application's filing receipt contains further information and guidance as to the status of applicant's license for foreign filing.

Applicants may wish to consult the USPTO booklet, "General Information Concerning Patents" (specifically, the section entitled "Treaties and Foreign Patents") for more information on timeframes and deadlines for filing foreign patent applications. The guide is available either by contacting the USPTO Contact Center at 800-786-9199, or it can be viewed on the USPTO website at http://www.uspto.gov/web/offices/pac/doc/general/index.html.

For information on preventing theft of your intellectual property (patents, trademarks and copyrights), you may wish to consult the U.S. Government website, http://www.stopfakes.gov. Part of a Department of Commerce initiative, this website includes self-help "toolkits" giving innovators guidance on how to protect intellectual property in specific countries such as China, Korea and Mexico. For questions regarding patent enforcement issues, applicants may call the U.S. Government hotline at 1-866-999-HALT (1-866-999-4258).

LICENSE FOR FOREIGN FILING UNDER

Title 35, United States Code, Section 184

Title 37, Code of Federal Regulations, 5.11 & 5.15

GRANTED

The applicant has been granted a license under 35 U.S.C. 184, if the phrase "IF REQUIRED, FOREIGN FILING LICENSE GRANTED" followed by a date appears on this form. Such licenses are issued in all applications where the conditions for issuance of a license have been met, regardless of whether or not a license may be required as set forth in 37 CFR 5.15. The scope and limitations of this license are set forth in 37 CFR 5.15(a) unless an earlier license has been issued under 37 CFR 5.15(b). The license is subject to revocation upon written notification. The date indicated is the effective date of the license, unless an earlier license of similar scope has been granted under 37 CFR 5.13 or 5.14.

This license is to be retained by the licensee and may be used at any time on or after the effective date thereof unless it is revoked. This license is automatically transferred to any related applications(s) filed under 37 CFR 1.53(d). This license is not retroactive.

The grant of a license does not in any way lessen the responsibility of a licensee for the security of the subject matter as imposed by any Government contract or the provisions of existing laws relating to espionage and the national security or the export of technical data. Licensees should apprise themselves of current regulations especially with respect to certain countries, of other agencies, particularly the Office of Defense Trade Controls, Department of State (with respect to Arms, Munitions and Implements of War (22 CFR 121-128)); the Bureau of Industry and Security, Department of Commerce (15 CFR parts 730-774); the Office of Foreign AssetsControl, Department of Treasury (31 CFR Parts 500+) and the Department of Energy.

NOT GRANTED

No license under 35 U.S.C. 184 has been granted at this time, if the phrase "IF REQUIRED, FOREIGN FILING LICENSE GRANTED" DOES NOT appear on this form. Applicant may still petition for a license under 37 CFR 5.12, if a license is desired before the expiration of 6 months from the filing date of the application. If 6 months has lapsed from the filing date of this application and the licensee has not received any indication of a secrecy order under 35 U.S.C. 181, the licensee may foreign file the application pursuant to 37 CFR 5.15(b).

SelectUSA

The United States represents the largest, most dynamic marketplace in the world and is an unparalleled location for business investment, innovation, and commercialization of new technologies. The U.S. offers tremendous resources and advantages for those who invest and manufacture goods here. Through SelectUSA, our nation works to promote and facilitate business investment. SelectUSA provides information assistance to the international investor community; serves as an ombudsman for existing and potential investors; advocates on behalf of U.S. cities, states, and regions competing for global investment; and counsels U.S. economic development organizations on investment attraction best practices. To learn more about why the United States is the best country in the world to develop technology, manufacture products, deliver services, and grow your business, visit http://www.SelectUSA.gov or call +1-202-482-6800.

To: patents@wagnerblecher.com,,
From: PAIR_eOfficeAction@uspto.gov
Cc: PAIR_eOfficeAction@uspto.gov
Subject: Private PAIR Correspondence Notification for Customer Number 70408

Jul 17, 2017 03:37:34 AM

Dear PAIR Customer:

FOX C/O WAGNER BLECHER LLP
123 WESTRIDGE DRIVE
WATSONVILLE, CA 95076
UNITED STATES

The following USPTO patent application(s) associated with your Customer Number, 70408 , have new outgoing correspondence. This correspondence is now available for viewing in Private PAIR.

The official date of notification of the outgoing correspondence will be indicated on the form PTOL-90 accompanying the correspondence.

Disclaimer:
The list of documents shown below is provided as a courtesy and is not part of the official file wrapper. The content of the images shown in PAIR is the official record.

Application	Document	Mailroom Date	Attorney Docket No.
14822859	APP.FILE.REC	07/17/2017	FOX-P5-08-12-US.CON

To view your correspondence online or update your email addresses, please visit us anytime at https://sportal.uspto.gov/secure/myportal/privatepair.

If you have any questions, please email the Electronic Business Center (EBC) at EBC@uspto.gov with 'e-Office Action' on the subject line or call 1-866-217-9197 during the following hours:

Monday - Friday 6:00 a.m. to 12:00 a.m.

Thank you for prompt attention to this notice,

UNITED STATES PATENT AND TRADEMARK OFFICE

PATENT APPLICATION INFORMATION RETRIEVAL SYSTEM

UNITED STATES PATENT AND TRADEMARK OFFICE

UNITED STATES DEPARTMENT OF COMMERCE
United States Patent and Trademark Office
Address: COMMISSIONER FOR PATENTS
P.O. Box 1450
Alexandria, Virginia 22313-1450
www.uspto.gov

APPLICATION NO.	ISSUE DATE	PATENT NO.	ATTORNEY DOCKET NO.	CONFIRMATION NO.
14/822,859	08/22/2017	9739331	FOX-P5-08-12-US.CON	6345

70408 7590 08/02/2017
FOX C/O WAGNER BLECHER LLP
123 WESTRIDGE DRIVE
WATSONVILLE, CA 95076

ISSUE NOTIFICATION

The projected patent number and issue date are specified above.

Determination of Patent Term Adjustment under 35 U.S.C. 154 (b)
(application filed on or after May 29, 2000)

The Patent Term Adjustment is 0 day(s). Any patent to issue from the above-identified application will include an indication of the adjustment on the front page.

If a Continued Prosecution Application (CPA) was filed in the above-identified application, the filing date that determines Patent Term Adjustment is the filing date of the most recent CPA.

Applicant will be able to obtain more detailed information by accessing the Patent Application Information Retrieval (PAIR) WEB site (http://pair.uspto.gov).

Any questions regarding the Patent Term Extension or Adjustment determination should be directed to the Office of Patent Legal Administration at (571)-272-7702. Questions relating to issue and publication fee payments should be directed to the Application Assistance Unit (AAU) of the Office of Data Management (ODM) at (571)-272-4200.

APPLICANT(s) (Please see PAIR WEB site http://pair.uspto.gov for additional applicants):

William M. Becker, Aptos, CA;
Fox Factory, Inc., Scotts Valley, CA;

The United States represents the largest, most dynamic marketplace in the world and is an unparalleled location for business investment, innovation, and commercialization of new technologies. The USA offers tremendous resources and advantages for those who invest and manufacture goods here. Through SelectUSA, our nation works to encourage and facilitate business investment. To learn more about why the USA is the best country in the world to develop technology, manufacture products, and grow your business, visit SelectUSA.gov.

IR103 (Rev. 10/09)

To: patents@wagnerblecher.com,,
From: PAIR_eOfficeAction@uspto.gov
Cc: PAIR_eOfficeAction@uspto.gov
Subject: Private PAIR Correspondence Notification for Customer Number 70408

Aug 03, 2017 03:41:42 AM

Dear PAIR Customer:

FOX C/O WAGNER BLECHER LLP
123 WESTRIDGE DRIVE
WATSONVILLE, CA 95076
UNITED STATES

The following USPTO patent application(s) associated with your Customer Number, 70408 , have new outgoing correspondence. This correspondence is now available for viewing in Private PAIR.

The official date of notification of the outgoing correspondence will be indicated on the form PTOL-90 accompanying the correspondence.

Disclaimer:
The list of documents shown below is provided as a courtesy and is not part of the official file wrapper. The content of the images shown in PAIR is the official record.

Application	Document	Mailroom Date	Attorney Docket No.
14822859	ISSUE.NTF	08/02/2017	FOX-P5-08-12-US.CON

To view your correspondence online or update your email addresses, please visit us anytime at https://sportal.uspto.gov/secure/myportal/privatepair.

If you have any questions, please email the Electronic Business Center (EBC) at EBC@uspto.gov with 'e-Office Action' on the subject line or call 1-866-217-9197 during the following hours:

Monday - Friday 6:00 a.m. to 12:00 a.m.

Thank you for prompt attention to this notice,

UNITED STATES PATENT AND TRADEMARK OFFICE

PATENT APPLICATION INFORMATION RETRIEVAL SYSTEM

AO 120 (Rev. 08/10)

TO:	Mail Stop 8 Director of the U.S. Patent and Trademark Office P.O. Box 1450 Alexandria, VA 22313-1450	REPORT ON THE FILING OR DETERMINATION OF AN ACTION REGARDING A PATENT OR TRADEMARK

In Compliance with 35 U.S.C. § 290 and/or 15 U.S.C. § 1116 you are hereby advised that a court action has been filed in the U.S. District Court Central District of California on the following

☐ Trademarks or ☑ Patents. (☐ the patent action involves 35 U.S.C. § 292.):

DOCKET NO.	DATE FILED	U.S. DISTRICT COURT
2:22-cv-04805	7/13/2022	Central District of California

PLAINTIFF	DEFENDANT
FOX FACTORY, INC.	SRAM, LLC

PATENT OR TRADEMARK NO.	DATE OF PATENT OR TRADEMARK	HOLDER OF PATENT OR TRADEMARK
1 US 9,739,331	8/22/2017	
2		
3		
4		
5		

In the above—entitled case, the following patent(s)/ trademark(s) have been included:

DATE INCLUDED	INCLUDED BY ☐ Amendment ☐ Answer ☐ Cross Bill ☐ Other Pleading	
PATENT OR TRADEMARK NO.	DATE OF PATENT OR TRADEMARK	HOLDER OF PATENT OR TRADEMARK
1		
2		
3		
4		
5		

In the above—entitled case, the following decision has been rendered or judgement issued:

DECISION/JUDGEMENT

CLERK	(BY) DEPUTY CLERK	DATE

Copy 1—Upon initiation of action, mail this copy to Director Copy 3—Upon termination of action, mail this copy to Director
Copy 2—Upon filing document adding patent(s), mail this copy to Director Copy 4—Case file copy