US006592136B2

(12) **United States Patent**
Becker et al.

(10) **Patent No.: US 6,592,136 B2**
(45) **Date of Patent: Jul. 15, 2003**

(54) **BICYCLE FORK CARTRIDGE ASSEMBLY**

(75) Inventors: **William M. Becker**, Aptos, CA (US); **Brian Lampman**, Santa Cruz, CA (US)

(73) Assignee: **Fox Factory, Inc.**, Watsonville, CA (US)

(*) Notice: Subject to any disclaimer, the term of this patent is extended or adjusted under 35 U.S.C. 154(b) by 0 days.

(21) Appl. No.: **09/897,706**

(22) Filed: **Jul. 2, 2001**

(65) **Prior Publication Data**

US 2003/0001358 A1 Jan. 2, 2003

(51) **Int. Cl.**[7] **B62K 25/06**; F16F 9/50
(52) **U.S. Cl.** **280/276**; 188/282.1; 188/285
(58) **Field of Search** 280/276, 279; 188/281, 285, 297, 313, 314, 316, 317, 282.1; 267/217

(56) **References Cited**

U.S. PATENT DOCUMENTS

4,561,669	A	12/1985	Simons
4,964,625	A	10/1990	Kawamura
4,971,344	A	11/1990	Turner
5,186,481	A	2/1993	Turner
5,301,973	A	4/1994	Truchinski
5,308,099	A	5/1994	Browning
5,354,085	A	10/1994	Gally
5,445,401	A	8/1995	Bradbury
5,456,480	A	10/1995	Turner et al.
5,494,302	A	2/1996	Farris et al.
5,509,677	A	4/1996	Bradbury
5,580,075	A	12/1996	Turner et al.
5,702,092	A	12/1997	Farris et al.
5,823,305	A	10/1998	Richardson et al.
5,829,773	A	11/1998	Rajaee
5,848,675	A	12/1998	Gonzalez
5,908,200	A	6/1999	Stewart
5,996,746	A	12/1999	Turner et al.
6,024,370	A	2/2000	Baldomero
6,036,212	A	3/2000	Baldomero
6,095,541	A	8/2000	Turner et al.
6,105,987	A	8/2000	Turner
6,105,988	A	8/2000	Turner et al.
6,120,049	A	9/2000	Gonzalez et al.
6,206,152	B1	3/2001	Grundei et al.
6,217,049	B1	4/2001	Becker
6,260,832	B1	7/2001	Vignocchi et al.

FOREIGN PATENT DOCUMENTS

EP	60091036	5/1985
EP	0 420 610 A1	4/1991
EP	0 834 448 A2	4/1998
FR	2 206 723	6/1974
FR	2 460 797	1/1981
JP	07238973	9/1995
JP	2000097272	4/2000
JP	2000264277	9/2000

OTHER PUBLICATIONS

Honda Service Manual, 1984–1999, 8 pages.
Kawasaki Service Manual, 1988, 11–2 Suspension, Exploded View, 1 page.
Yamaha, 1987, Owner's Service Manual, YZ250U, 11 pages.
Honda Clymer Service Manual, CR125R & CR250R, 1992–1996, 13 pages.

Primary Examiner—Anne Marie Boehler
(74) *Attorney, Agent, or Firm*—Knobbe Martens Olson & Bear LLP

(57) **ABSTRACT**

An off-road bicycle suspension fork includes a pair of fork leg assemblies, each of the leg assemblies having an upper leg telescopingly engaged with a lower leg. A damping assembly is provided in at least one of the legs and includes a cartridge tube connected to the lower leg and a piston connected to the upper tube by a shaft. The piston is telescopingly engaged with the cartridge tube to define a compression chamber below the piston. A control assembly is located at a top portion of the upper leg and is in communication with the compression chamber via a central passage of the shaft. A reservoir is defined between at least a portion of the lower tube and the cartridge. During compression of the suspension fork, fluid flows from the compression chamber, upward through the central passage of the shaft, through the control assembly and to the reservoir.

64 Claims, 15 Drawing Sheets

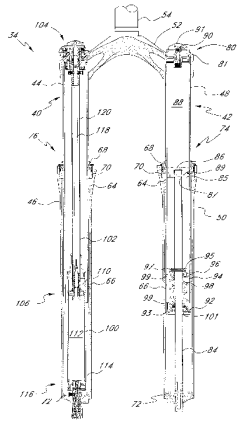

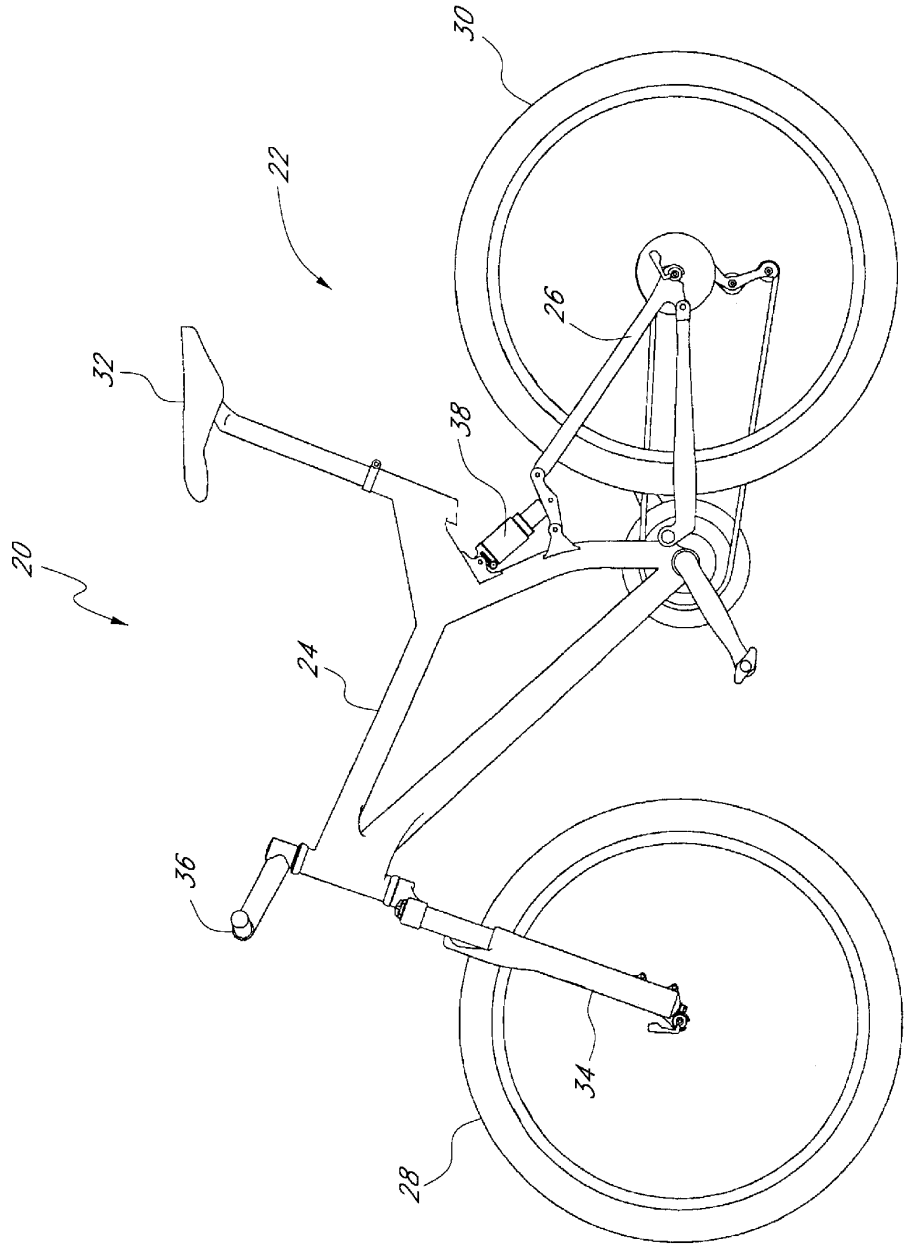

FIG. 1

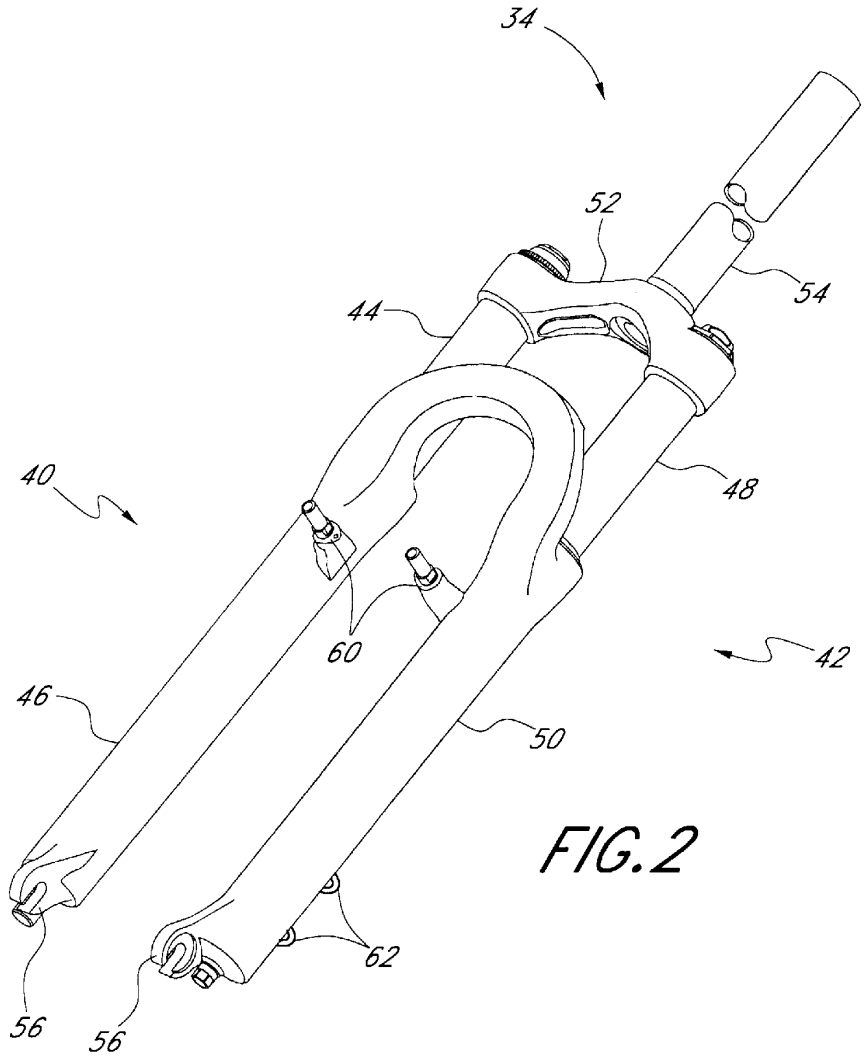

FIG. 2

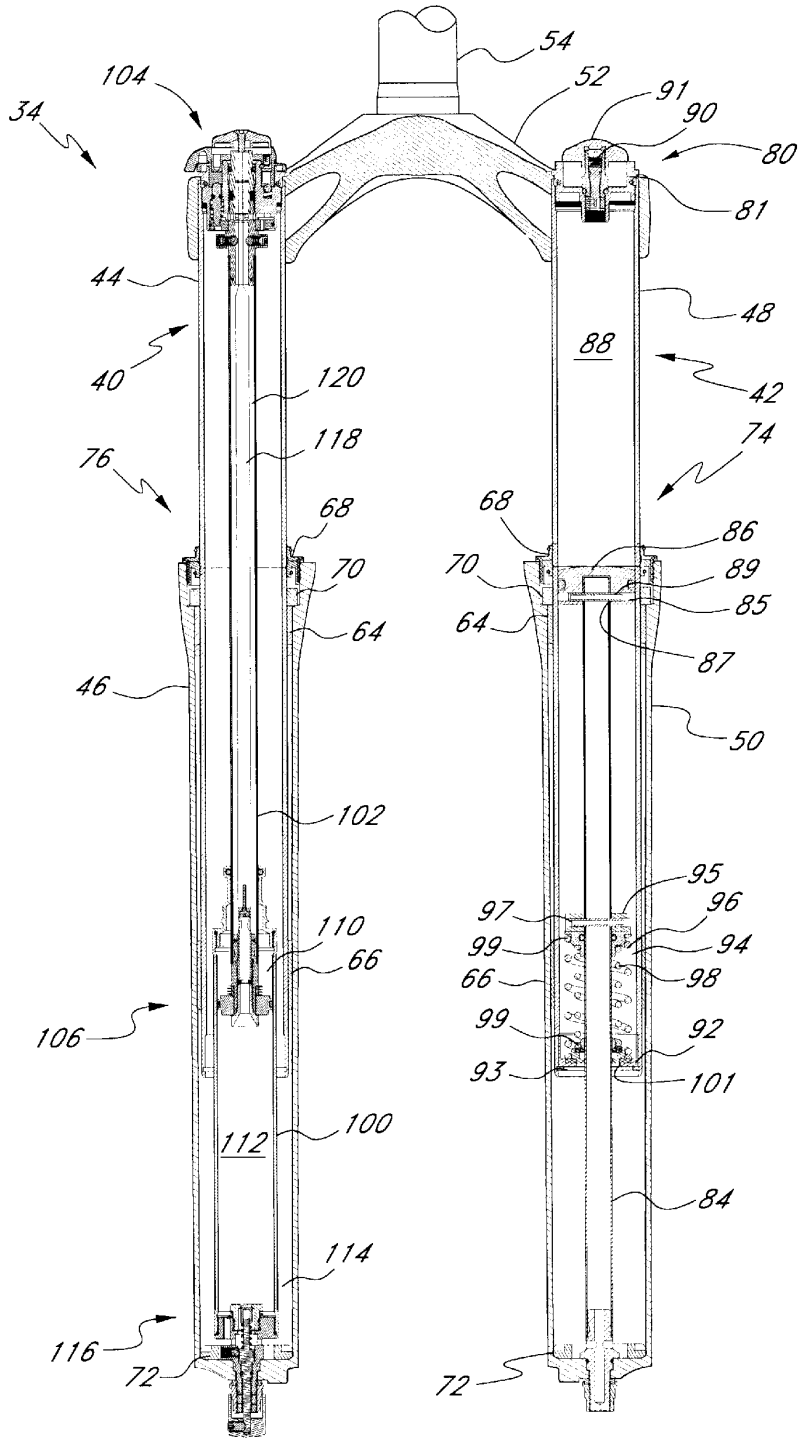

FIG. 3

SRAM_FOX_CO_000205

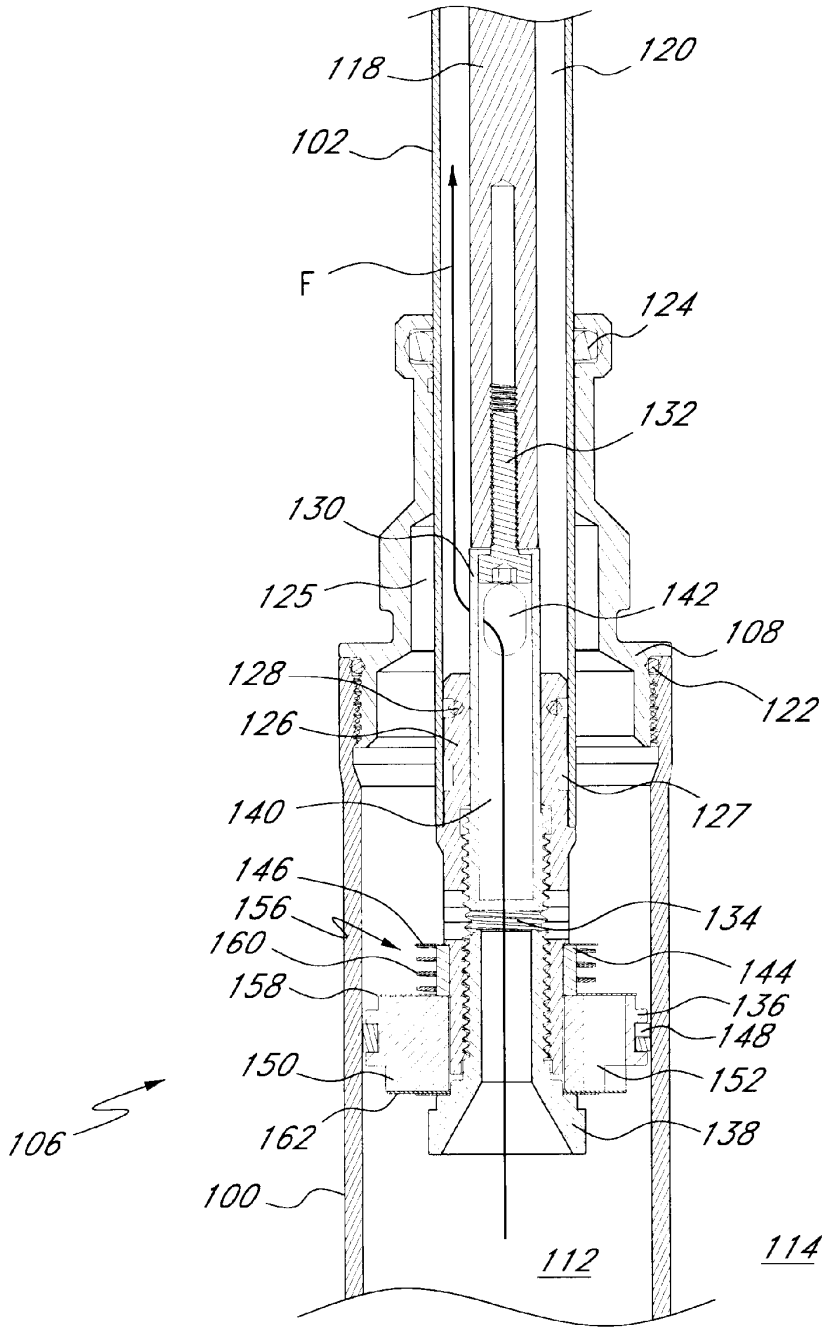
118
120
102
F
124
132
130
125
142
108
128
122
126
140
127
146
156
134
160
144
158
136
148
150
152
106
162
138
100
112
114

FIG. 4

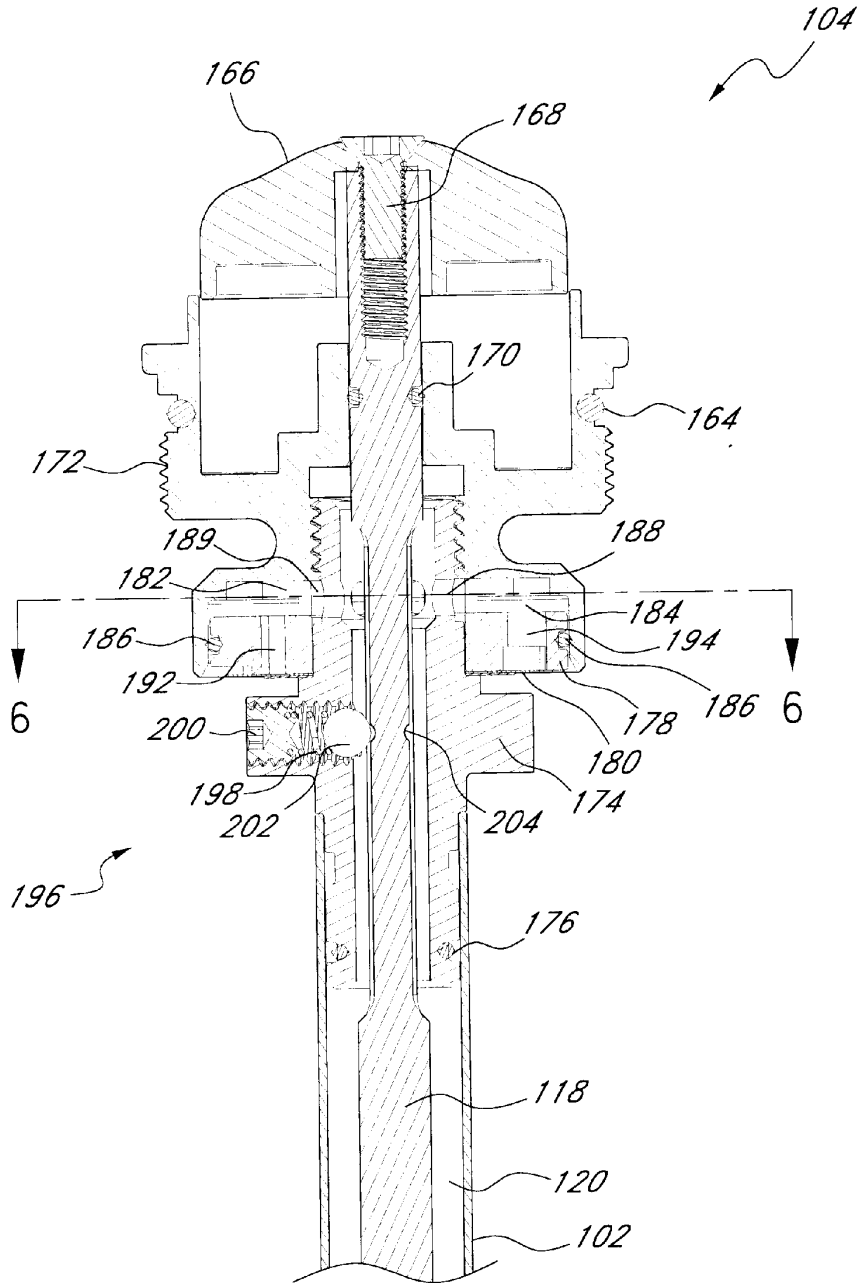
104
166
168
170
164
172
189
188
182
184
186
194
192
186
6
6
178
200
180
198
174
202
204
196
176
118
120
102

FIG. 5

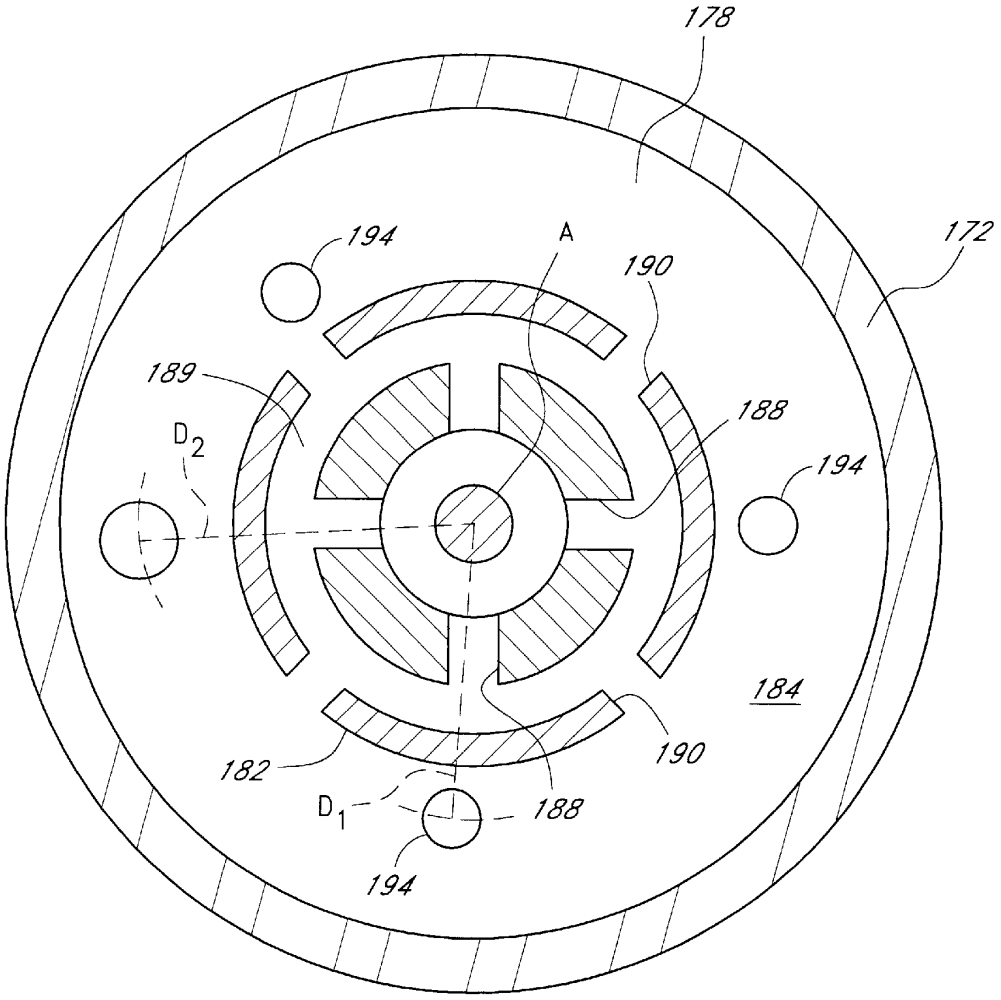

FIG. 6

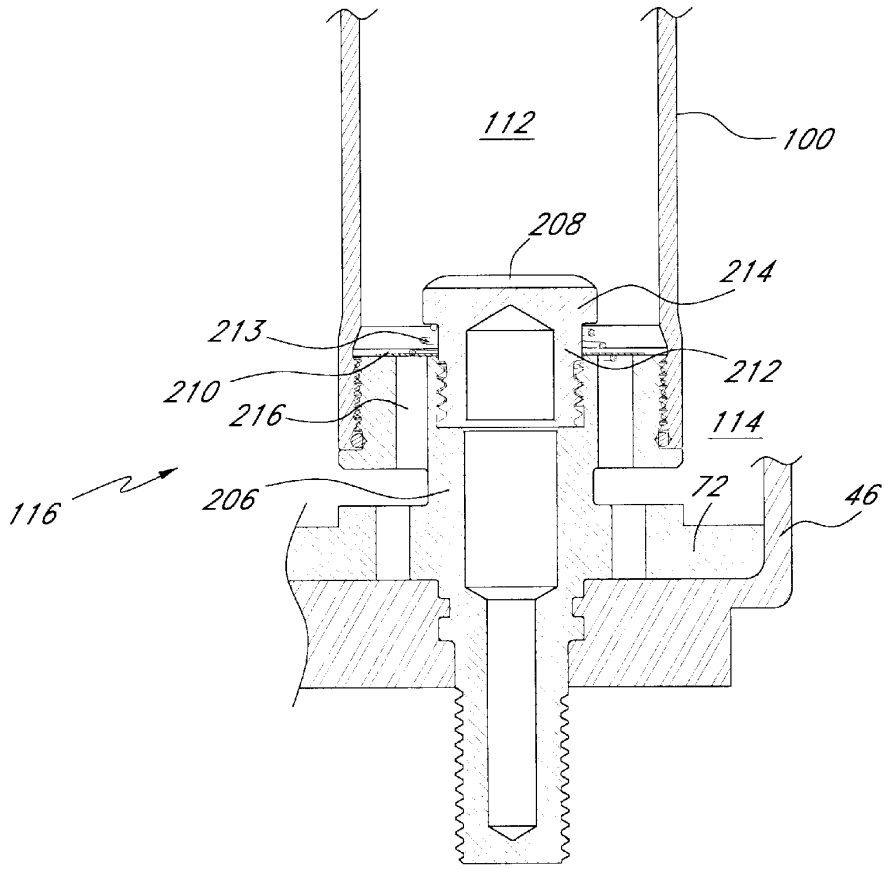

FIG. 7

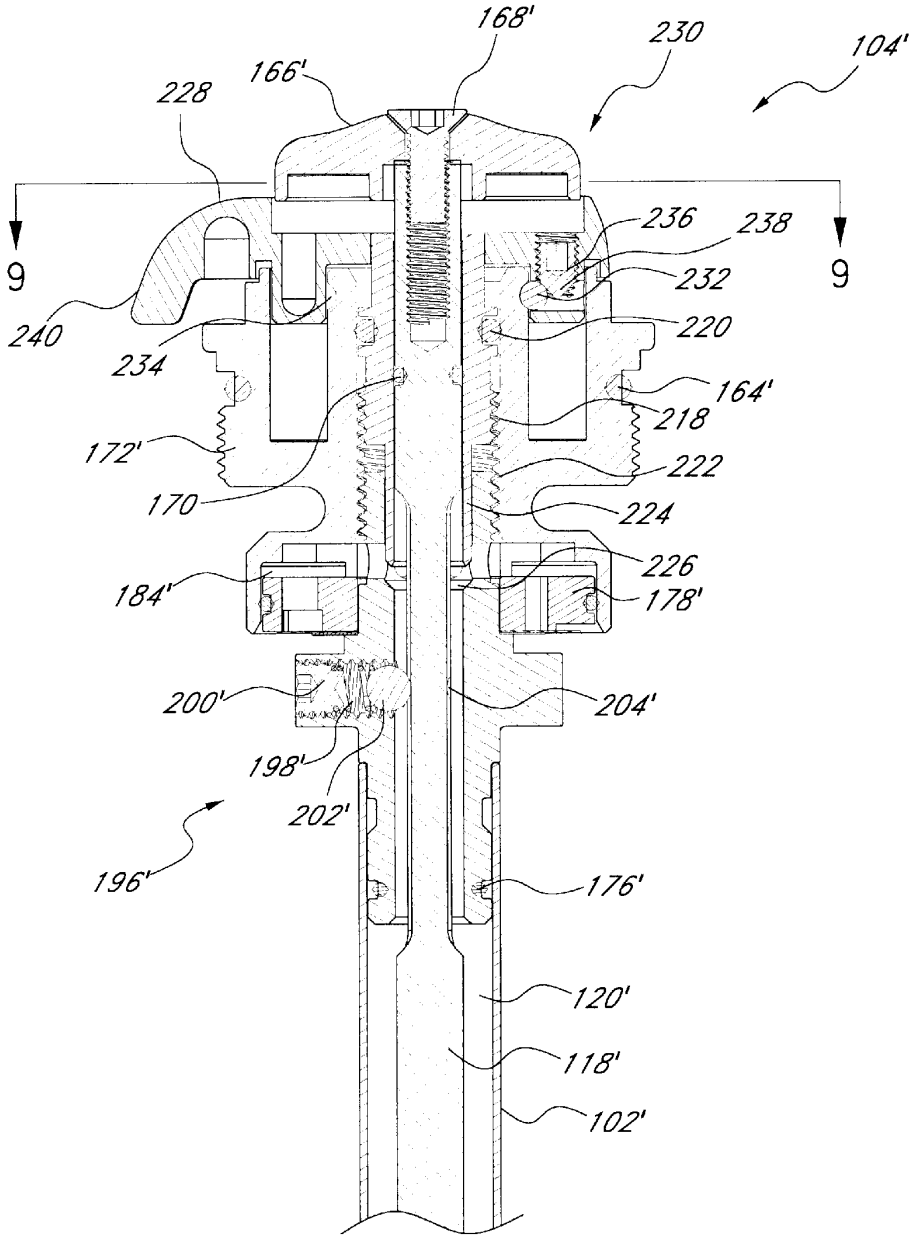
168'
230
104'
166'
228
236
238
9
9
232
240
220
234
164'
218
172'
222
170
224
226
184'
178'
200'
204'
198'
202'
196'
176'
120'
118'
102'

FIG. 8

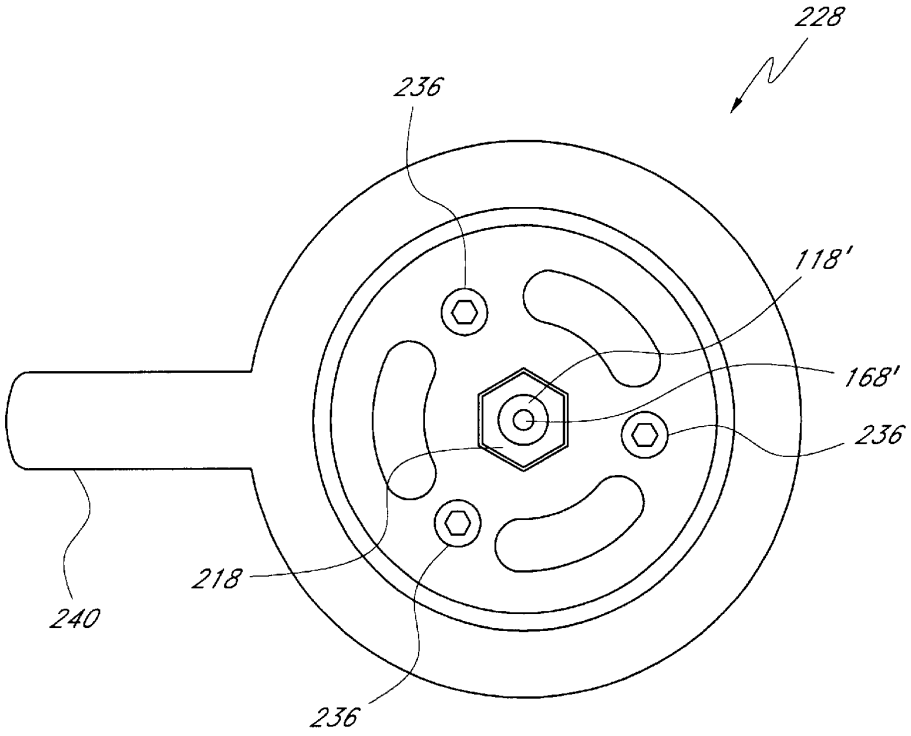

FIG. 9

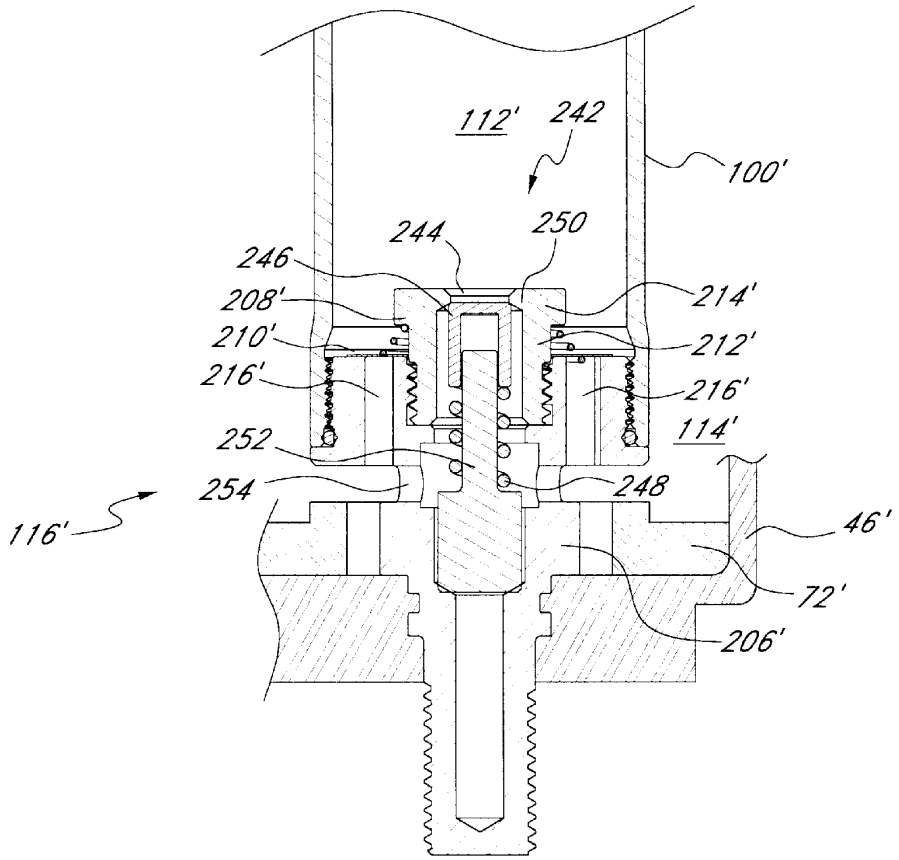
112'
242
100'
244
250
246
208'
214'
210'
212'
216'
216'
114'
252
254
248
116'
46'
72'
206'

FIG. 10

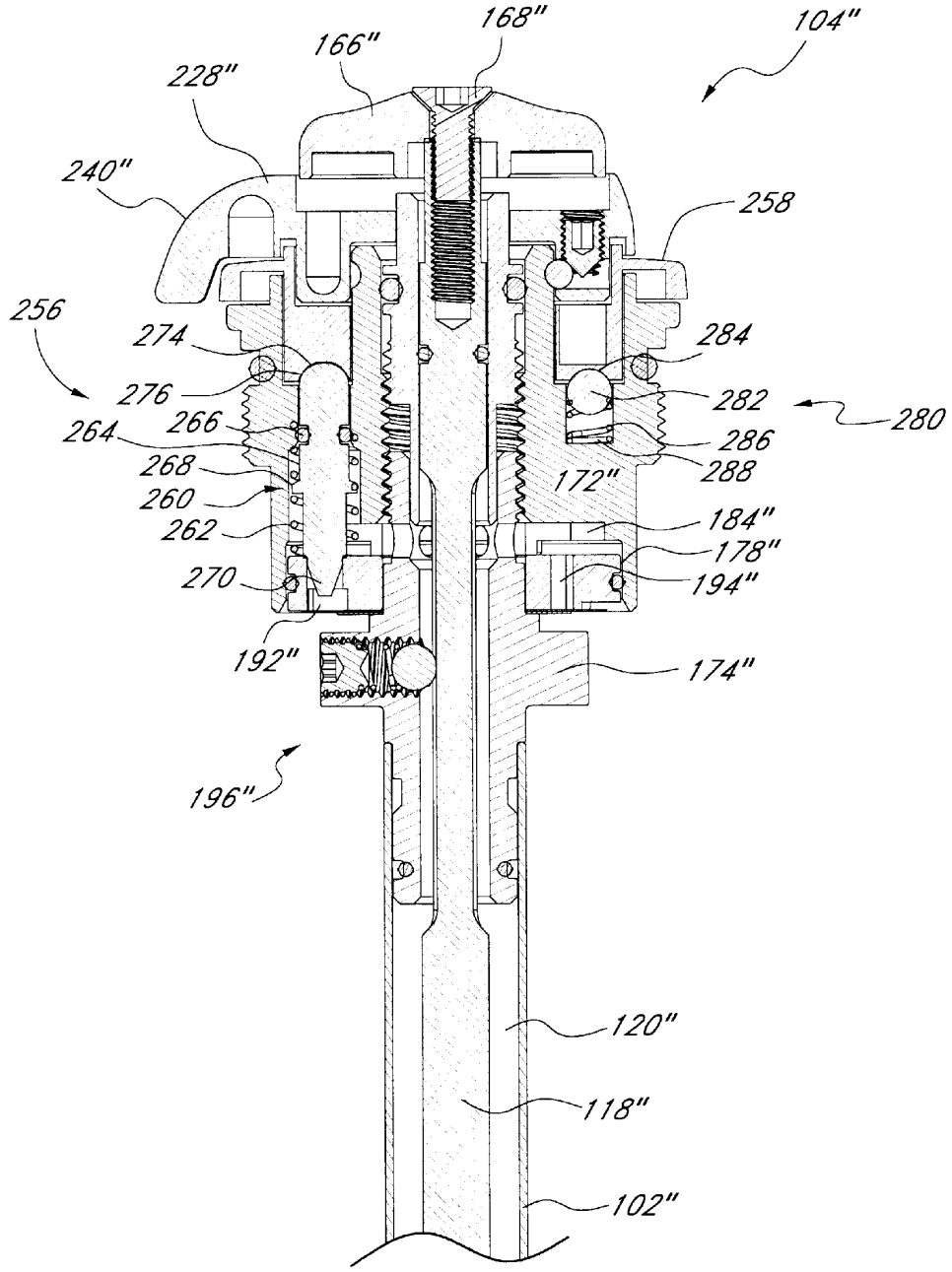

FIG. 11

SRAM_FOX_CO_000213

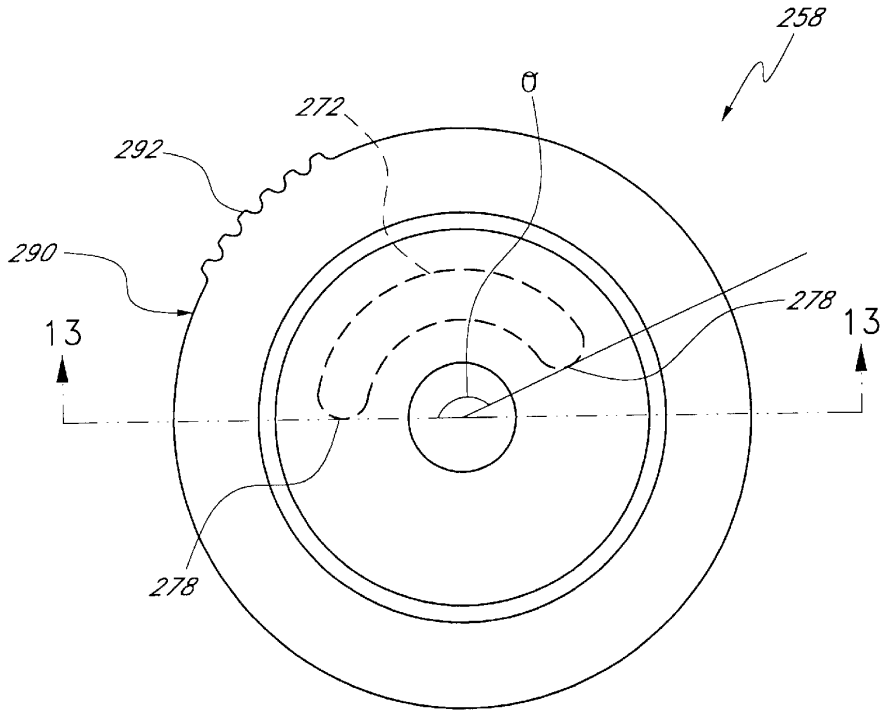

FIG. 12

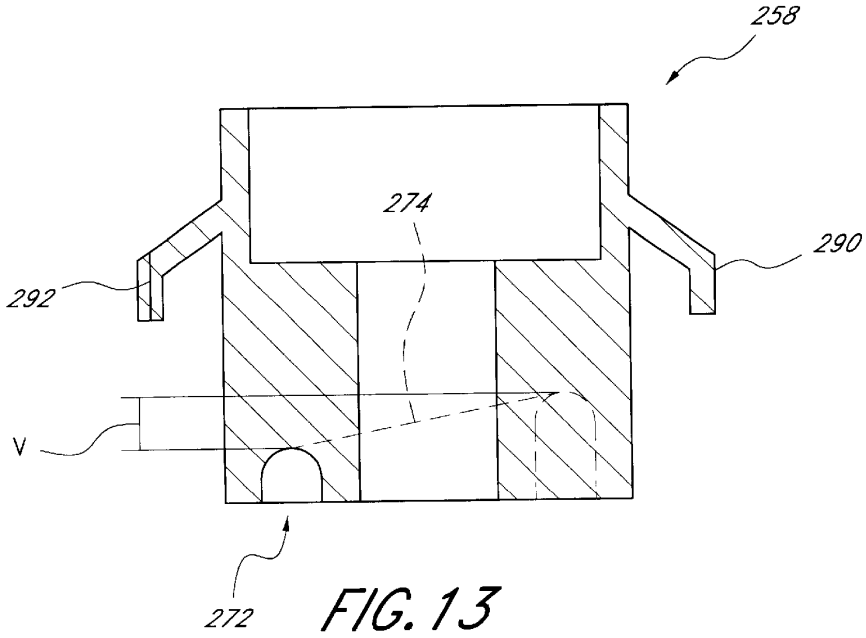

FIG. 13

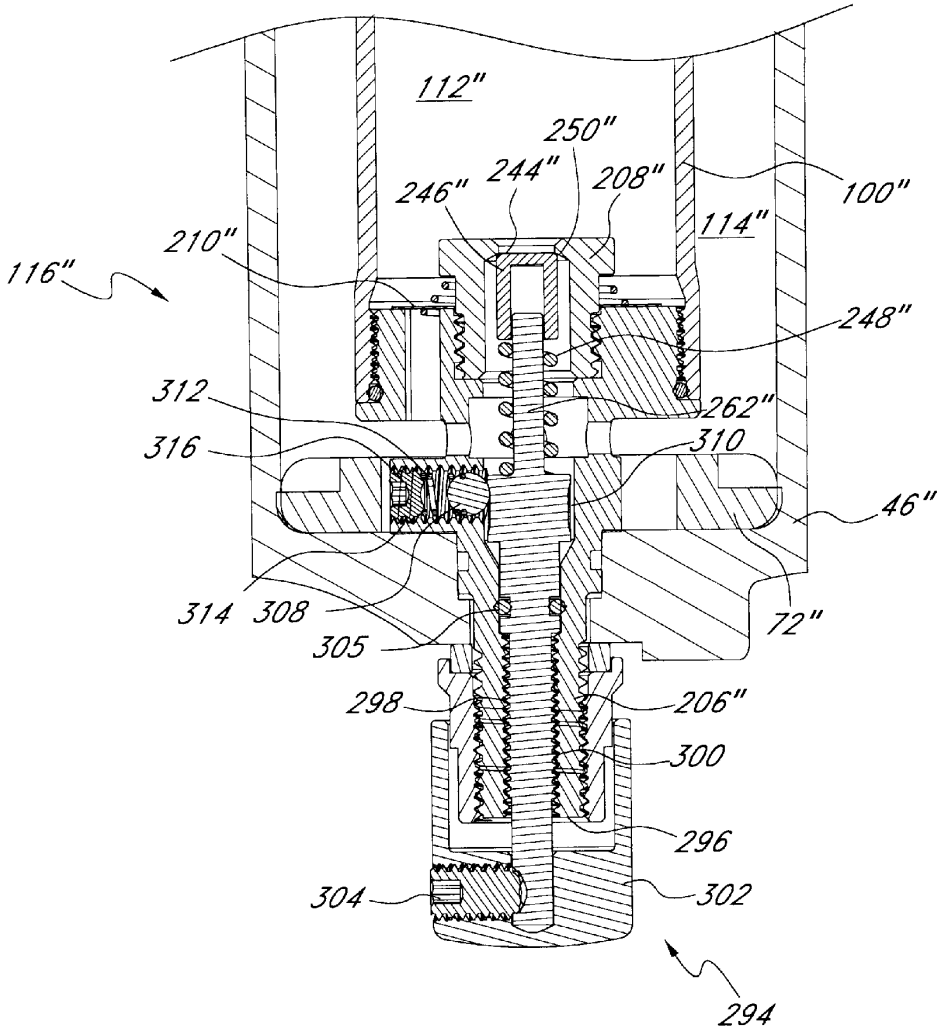
112"
250"
244"
208"
246"
100"
114"
210"
116"
248"
312
262"
316
310
46"
314
308
305
72"
298
206"
300
296
304
302
294

FIG. 14

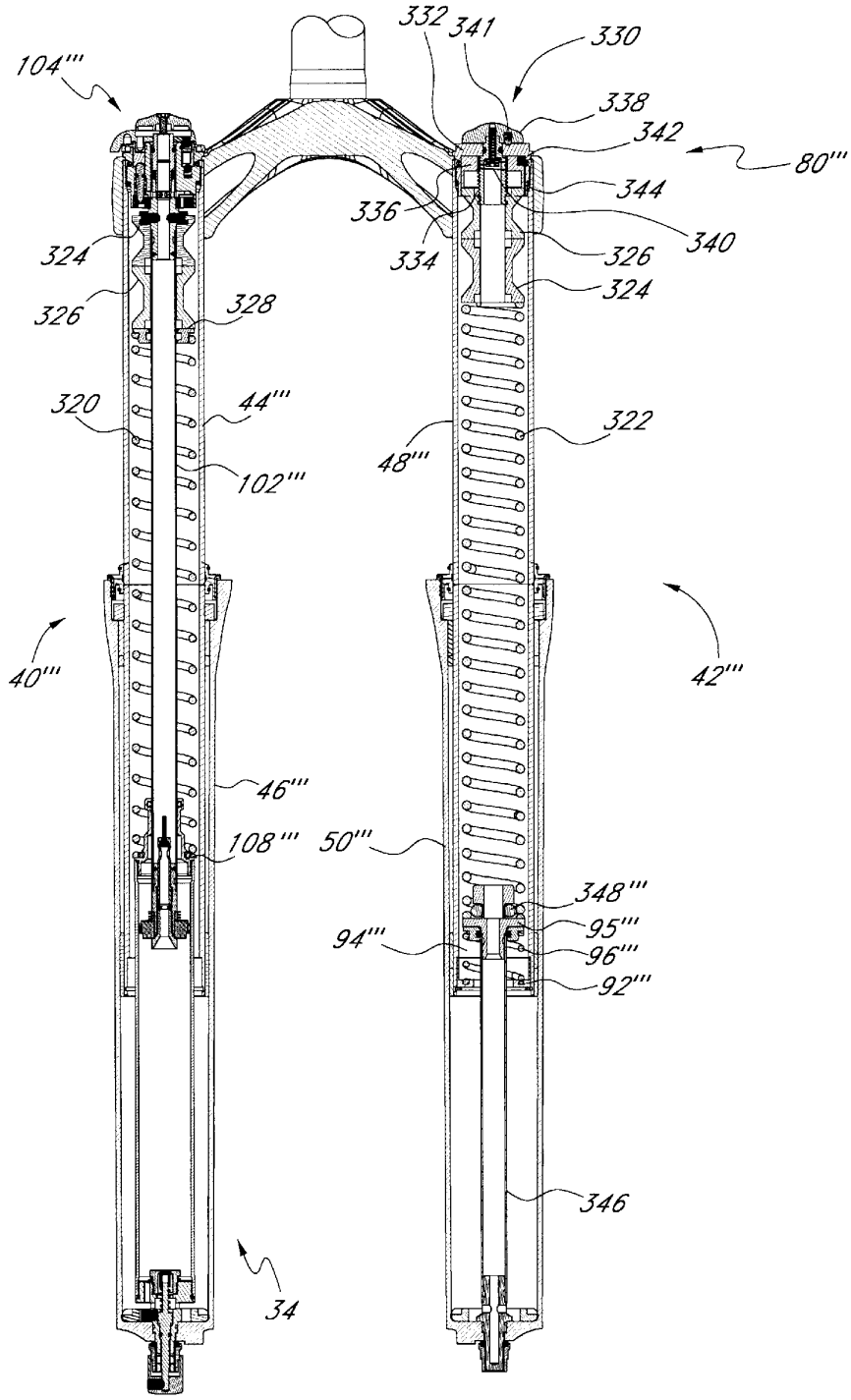

FIG. 15

SRAM_FOX_CO_000216

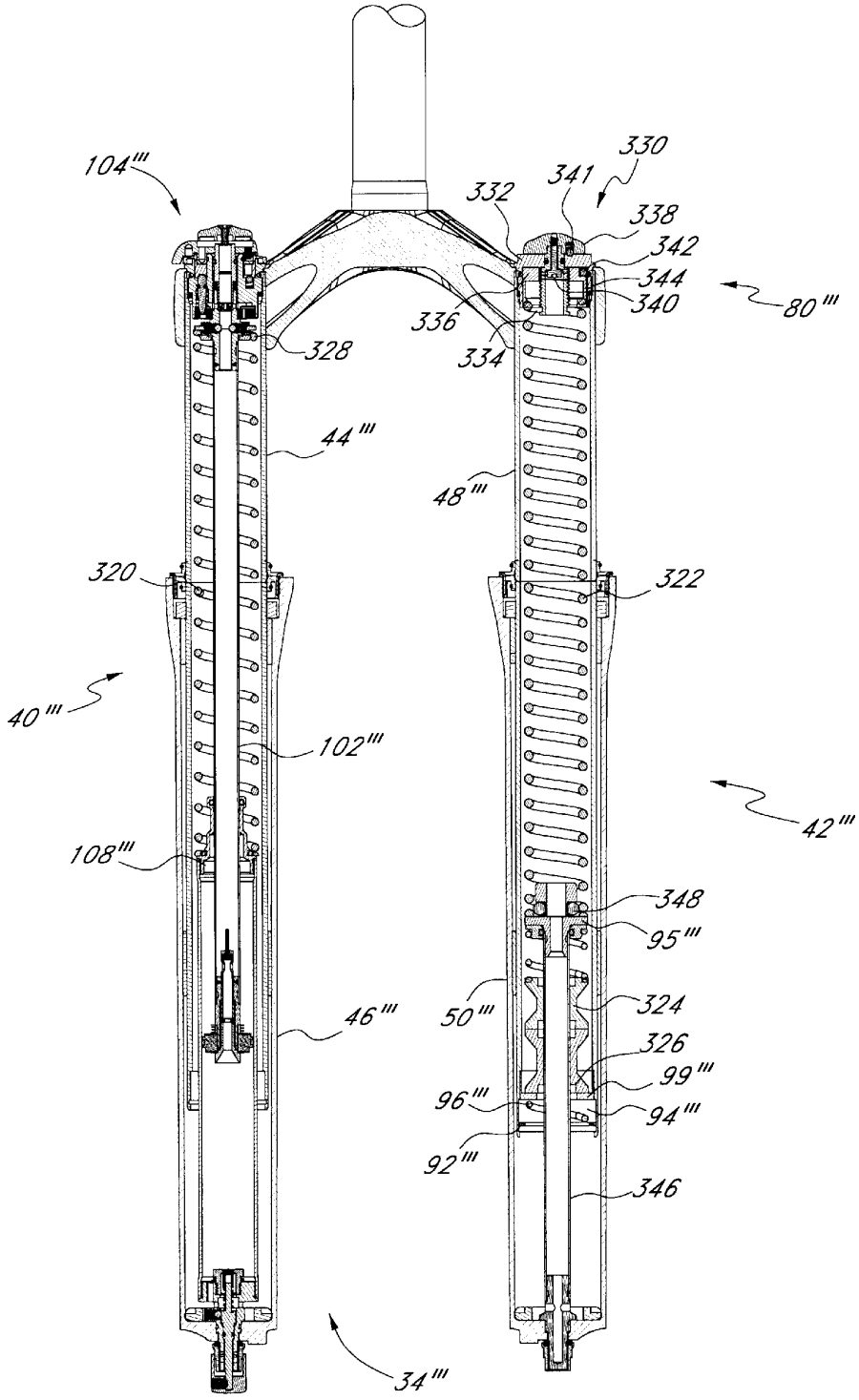

FIG. 16

SRAM_FOX_CO_000217

BICYCLE FORK CARTRIDGE ASSEMBLY

BACKGROUND AND SUMMARY OF THE INVENTION

1. Field of the Invention

The present invention is generally related to vehicle suspension assemblies. More particularly, the present invention is related to a front suspension fork for use on an off-road bicycle.

2. Description of the Related Art

Suspension fork assemblies are often utilized on off-road bicycles, or mountain bikes, to absorb energy imparted to the front wheel by the terrain on which the bicycle is being ridden. The use of a suspension fork allows a rider to traverse rougher terrain, at a greater speed and with less fatigue in comparison to riding a bicycle equipped with a rigid fork. Due to the fact that bicycle riders vary greatly in both weight and riding ability, it is highly desirable that certain performance aspects of the suspension fork, such as compression and rebound damping characteristics, be capable of adjustment to suit a particular individual.

To avoid the need to disassemble the fork in order to adjust the suspension settings, it is preferable to locate the adjustment controls such that they are externally accessible. Furthermore, an individual rider is likely to ride in wide variety of terrain conditions, often during the course of a single ride or race. Accordingly, adjustment of the damping characteristics while riding is greatly facilitated by locating the adjustment controls on an upper portion of the suspension fork.

Ideally, the adjustment controls would be disposed on a damper cap assembly at the top of one of the fork legs and include a compression lock-out for substantially preventing compression of the fork. The compression lock-out feature is desirable so that the suspension fork may selectively behave substantially as a rigid fork while riding on smooth terrain, to enhance both handling and power transfer to the rear wheel of the bicycle. However, prior art mountain bike suspension forks have failed to provide both a compression lock-out feature and external damping adjustment controls that are easily accessible while riding. Further, existing mechanisms for providing external damping adjustment and compression lock-out require undue complexity. Thus, an improved mountain bike suspension fork is desirable.

SUMMARY OF PREFERRED EMBODIMENTS

Preferred embodiments of the present suspension fork include a damping assembly having a damping control assembly located at an upper portion of the fork. A hollow shaft connects a piston to the control assembly. On compression of the fork, damping fluid flows upward through the central passage of the shaft to the damping control assembly. With such a fluid flow arrangement, a simplified arrangement of externally accessible controls may be disposed on the control assembly. This arrangement permits compression damping, rebound damping and compression lock-out controls to be collectively located so as to be accessible to a rider of a bicycle, while the bicycle is being ridden.

In addition, a reservoir is preferably disposed in a lower portion of the fork such that fluid exiting the damping control assembly travels in a downward direction due to gravity, substantially the entire length of the fork. This arrangement advantageously allows the damping fluid to also lubricate certain internal components of the fork, including bushings, seals and a suspension coil spring, if provided.

A preferred embodiment comprises a bicycle front fork including an upper tube having a top portion, a bottom portion and an intermediate portion. A lower tube having a top portion, a bottom portion and an intermediate portion is telescopingly movable with respect to the upper tube. An upper control assembly is positioned at the top portion of the upper tube. A damping cartridge is positioned at least partly within the lower tube and defines a top portion, a bottom portion and an intermediate portion. At least a section of the lower tube surrounding the cartridge, at least partially defines a reservoir. A shaft extends from the top portion of the upper tube into the damping cartridge. A main damping piston is connected to the shaft and positioned in the cartridge. At least the bottom portion of the cartridge defines a lower internal chamber located below the piston. The piston, the shaft and the control assembly cooperate to define a flow channel from the chamber through the piston, the shaft and the control assembly to the reservoir.

A preferred embodiment comprises a bicycle front fork including an upper tube having a top portion, a bottom portion and an intermediate portion. A lower tube having a top portion, a bottom portion and an intermediate portion is telescopingly movable with respect to the upper tube. An upper control assembly is positioned at the top portion of the upper tube. A damping cartridge is positioned at least partly within the lower tube and defines a top portion, a bottom portion and an intermediate portion. At least a section of the lower tube surrounding the cartridge, at least partially defines a reservoir. The bottom portion of the damping cartridge defines a lower control assembly which operates to permit fluid to enter the cartridge from the reservoir through the lower control assembly, but prevents fluid from exiting the cartridge at low pressure levels. A shaft extends from the top portion of the upper tube into the damping cartridge. A main damping piston is connected to the shaft and positioned in the cartridge. At least the bottom portion of the cartridge defines a lower internal chamber located below the piston. The piston, the shaft and the control assembly cooperate to define a flow channel from the chamber through the piston, the shaft and the control assembly to the reservoir. The upper control assembly includes a one-way valve which prevents the flow of fluid from the reservoir through the control assembly when the shaft and the piston move upward away from the bottom portion of the damping cartridge.

A preferred embodiment comprises a bicycle front fork including an upper tube having a top portion, a bottom portion and an intermediate portion. A lower tube having a top portion, a bottom portion and an intermediate portion is telescopingly movable with respect to the upper tube. An upper control assembly is positioned at the top portion of the upper tube. A damping cartridge is positioned at least partly within the lower tube and defines a top portion, a bottom portion and an intermediate portion. At least a section of the lower tube surrounding the cartridge, at least partially defines a reservoir. A shaft extends from the top portion of the upper tube into the damping cartridge. A main damping piston is connected to the shaft and positioned in the cartridge. At least the bottom portion of the cartridge defines a lower internal chamber located below the piston. The piston, the shaft and the control assembly cooperate to define a flow channel from the chamber through the piston, the shaft and the control assembly to the reservoir. The upper control assembly also includes a lock-out valve which selectively prevents the flow of fluid from the shaft through the assembly and to the reservoir.

A preferred embodiment comprises a bicycle front fork including an upper tube having a top portion, a bottom

portion and an intermediate portion. A lower tube having a top portion, a bottom portion and an intermediate portion is telescopingly movable with respect to the upper tube. An upper control assembly is positioned at the top portion of the upper tube. A damping cartridge is positioned at least partly within the lower tube and defines a top portion, a bottom portion and an intermediate portion. At least a section of the lower tube surrounding the cartridge, at least partially defines a reservoir. A shaft extends from the top portion of the upper tube into the damping cartridge. A main damping piston is connected to the shaft and positioned in the cartridge. At least the bottom portion of the cartridge defines a lower internal chamber located below the piston. The piston, the shaft and the control assembly cooperate to define a flow channel from the chamber through the piston, the shaft and the control assembly to the reservoir. A blow-off valve is positioned at the bottom portion of the cartridge to permit flow through the blow-off valve and into the reservoir in response to a threshold blow-off pressure.

A preferred embodiment comprises a bicycle front fork including an upper tube having a top portion, a bottom portion and an intermediate portion. A lower tube having a top portion, a bottom portion and an intermediate portion is telescopingly movable with respect to the upper tube. A shaft extends axially from the top portion of the upper tube. A main damping piston is connected to the shaft and at least partially defines a damping chamber. The fork defines a low speed compression circuit and a rebound circuit. A control assembly located at the top portion of the upper tube includes a first control connected to the low speed compression circuit and is manually adjustable, external of the fork. In a first position, fluid is able to flow through the low speed compression circuit and, in a second position, flow through said low speed compression circuit is prevented. A second control is connected to the rebound circuit and is manually adjustable, from external of the fork. In a first position, a first rate of flow through the rebound circuit is permitted and, in a second position, a second rate of flow through the rebound circuit is permitted. The first rate of flow is higher than said second rate of flow. The control assembly also comprises a third control connected to a restrictor, which communicates with the low speed compression circuit. The restrictor is manually movable from external of the fork between at least a first position, wherein the restrictor provides at least a first amount of resistance to flow through the low speed compression circuit, and a second position, wherein the restrictor provides a second amount of resistance to flow through the low speed compression circuit.

A preferred embodiment comprises a bicycle front fork including an upper tube having a top portion, a bottom portion and an intermediate portion. A lower tube having a top portion, a bottom portion and an intermediate portion is telescopingly movable with respect to the upper tube. A shaft extends axially from the top portion of the upper tube. A main damping piston is connected to the shaft and at least partially defines a damping chamber. The fork defines a low speed compression circuit. A control assembly located at the top portion of the upper tube includes a first control connected to the low speed compression circuit and is manually adjustable, external of the fork. In a first position, fluid is able to flow through the low speed compression circuit and, in a second position, flow through said low speed compression circuit is prevented. The control assembly also comprises a second control connected to a restrictor, which communicates with the low speed compression circuit. The restrictor is manually movable from external of the fork between at least a first position, wherein the restrictor provides at least a first amount of resistance to flow through the low speed compression circuit, and a second position, wherein the restrictor provides a second amount of resistance to flow through the low speed compression circuit.

A preferred embodiment comprises a shock absorber including an upper tube having a top portion, a bottom portion and an intermediate portion. A lower tube having a top portion, a bottom portion and an intermediate portion is telescopingly movable with respect to the upper tube. An upper control assembly is positioned at the top portion of the upper tube. A damping cartridge is positioned at least partly within the lower tube and defines a top portion, a bottom portion and an intermediate portion. At least a section of the lower tube surrounding the cartridge, at least partially defines a reservoir. A shaft extends from the top portion of the upper tube into the damping cartridge. A main damping piston is connected to the shaft and positioned in the cartridge. At least the bottom portion of the cartridge defines a lower internal chamber located below the piston. The piston, the shaft and the control assembly cooperate to define a flow channel from the chamber through the piston, the shaft and the control assembly to the reservoir.

A preferred embodiment comprises a bicycle having a front fork. The front fork includes an upper tube having a top portion, a bottom portion and an intermediate portion. A lower tube having a top portion, a bottom portion and an intermediate portion is telescopingly movable with respect to the upper tube. An upper control assembly is positioned at the top portion of the upper tube. A damping cartridge is positioned at least partly within the lower tube and defines a top portion, a bottom portion and an intermediate portion. At least a section of the lower tube surrounding the cartridge, at least partially, defines a reservoir. A shaft extends from the top portion of the upper tube into the damping cartridge. A main damping piston is connected to the shaft and positioned in the cartridge. At least the bottom portion of the cartridge defines a lower internal chamber located below the piston. The piston, the shaft and the control assembly cooperate to define a flow channel from the chamber through the piston, the shaft and the control assembly to the reservoir.

BRIEF DESCRIPTION OF THE DRAWINGS

The above mentioned and other features will now be described with reference to the drawings of preferred embodiments of the present suspension fork. The illustrated embodiments of the suspension fork are intended to illustrate, but not to limit the invention. The drawings contain the following figures:

FIG. **1** is a perspective view of a bicycle having a preferred embodiment of a front wheel suspension fork;

FIG. **2** is a perspective view of the suspension fork of FIG. **1**, which is illustrated as removed from the bicycle;

FIG. **3** is a cross-section of the suspension fork of FIG. **1**, thus illustrating the internal components of the fork;

FIG. **4** is an enlarged cross-section illustrating the rebound damping circuit of the suspension fork of FIG. **1**;

FIG. **5** is an enlarged cross-section of a rebound adjustment cap assembly of the suspension fork of FIG. **1**;

FIG. **6** is a cross-section of the cap assembly taken along the line **6**—**6** in FIG. **5**;

FIG. **7** is an enlarged cross-section of a base valve assembly of the suspension fork of FIG. **1**;

FIG. **8** is an enlarged cross-section of a rebound adjustment and lock-out cap assembly of a second embodiment of a suspension fork;

FIG. **9** is a cross-section of the cap assembly of FIG. **8**, taken along the line **9**—**9** in FIG. **8**;

FIG. **10** is a cross-section of a base valve assembly of the second embodiment;

FIG. **11** is a cross-section of a rebound adjustment, low speed compression adjustment and lock-out cap assembly of a third embodiment of a suspension fork;

FIG. **12** is a top view of a low-speed compression adjustment knob of the cap assembly of FIG. **11**;

FIG. **13** is a cross-section of the low-speed compression adjustment knob of FIG. **12**, taken along the line **13**—**13** of FIG. **12**;

FIG. **14** is a cross-section of a blow-off adjustment base valve assembly of the third embodiment;

FIG. **15** is a cross-section of a coil-sprung embodiment having a coil spring in each leg for providing an expansion force on the fork;

FIG. **16** is a cross-section of the coil-sprung fork of FIG. **15** in a shortened travel position.

DETAILED DESCRIPTION OF THE PREFERRED EMBODIMENT

FIG. **1** illustrates an off-road bicycle, or mountain bike **20**, including a frame **22** which is comprised of a main frame portion **24** and a swing arm portion **26**. The swing arm portion **26** is pivotally attached to the main frame portion **24**. The bicycle **20** includes front and rear wheels **28**, **30** connected to the main frame **24**. A seat **32** is connected to the main frame **24** in order to support a rider of the bicycle **20**.

The front wheel **28** is supported by a preferred embodiment of a suspension fork **34** which, in turn, is secured to the main frame **24** by a handlebar assembly **36**. The rear wheel **30** is connected to the swing arm portion **26** of the frame **22**. A rear shock **38** is positioned between the swing arm **26** and the frame **22** to provide resistance to the pivoting motion of the swing arm **26**. Thus, the illustrated bicycle **20** includes suspension members between the front and rear wheels **28**, **30** and the frame **22** which operate to substantially reduce wheel impact forces from being transmitted to the rider of the bicycle **20**.

FIG. **2** illustrates the suspension fork **34** detached from the bicycle **20** of FIG. **1**. The suspension fork **34** includes right and left legs **40**, **42**, as referenced by a person in a riding position on the bicycle **20**. The right leg **40** includes a right upper tube **44** telescopingly received in a right lower tube **46**. Similarly, the left leg **42** includes a left upper tube **48** telescopingly received in a left lower tube **50**. A crown **52** connects the right upper tube **44** to the left upper tube **48** thereby connecting the right leg **40** to the left leg **42** of the suspension fork **34**. In addition, the crown supports a steerer tube **54**, which passes through, and is rotatably supported by, the frame **22** of the bicycle **20**. The steerer tube **54** provides a means for connection of the handlebar assembly **36** to the suspension fork **34**, as illustrated in FIG. **1**.

Each of the right lower tube **46** and left lower tube **50** includes a drop out **56** for connecting the front wheel **28** to the fork **34**. An arch **58** connects the right lower tube **46** and the left lower tube **50** to provide strength and minimize twisting thereof. Preferably, the right lower tube **46**, left lower tube **50** and the arch **58** are formed as a unitary piece, however, the tubes **46**, **50** and arch **58** may be separate pieces and connected by a suitable fastening method.

The suspension fork **34** also includes a pair of rim brake bosses **60** to which a standard rim brake may be mounted. In addition, the fork **34** may include a pair of disc brake bosses **62** to which a disc brake may be mounted. Of course, the suspension fork **34** may include only one or the other of the rim brake bosses **60** and disc brake bosses **62**, depending on the type of brake system desired.

FIG. **3** is a cross-section view of the suspension fork **34** of FIG. **2** having the front portion cutaway to illustrate various internal components of the fork **34**. As described previously, each of the upper tubes **44**, **48** is capable of telescopic motion relative to its respective lower tube **46**, **50**. Each of the fork legs **40**, **42** includes an upper bushing **64** and a lower bushing **66** positioned between the respective upper tubes **44**, **48** and the lower tubes **46**, **50**. The bushings **64**, **66** inhibit wear of the upper tubes **44**, **48** and the lower tubes **46**, **50** by preventing direct contact between the tubes. Preferably, the bushings **64**, **66** are fixed to the respective lower tubes **46**, **50** and are made from a self-lubricating and wear resistant material, as is known in the art. However, the bushings **64**, **66** may be similarly fixed to the upper tubes **44**, **48**. Preferably, the bushings **64**, **66** include grooves (not shown) which allow hydraulic fluid to pass between the bushings **64**, **66** and the upper fork tubes **44**, **48**.

Each of the lower tubes **46**, **50** have a closed lower end and an open upper end. Each of the upper tubes **44**, **48** is received into a respective lower tube **46**, **50** through its open upper end. A sealing arrangement is provided on each leg **40**, **42** at the location where the upper tubes **44**, **48** enter the open end of the lower tubes **46**, **50**. The sealing arrangement comprises a main seal **68**, preferably disposed above a foam ring **70**. The main seals **68** are supported by the lower tubes **46**, **50** and are in sealing engagement with the upper tubes **44**, **48** to substantially prevent oil from exiting, or foreign material from entering, the fork legs **40**, **42** between the open end of the lower tubes **46**, **50** and the upper tubes **44**, **48**. The foam rings **70** are supported by the lower tubes **46**, **50** and are in engagement with the upper tubes **44**, **48** to capture hydraulic fluid which passes upward between the upper bushings **64** and upper fork tubes **44**, **48**. The foam rings **70** then distribute the hydraulic fluid evenly onto the upper tubes **44**, **48** which, in turn, lubricate the main seals **68**.

Each of the fork legs **40**, **42** includes a bottom-out bumper **72** disposed at the closed lower end of the lower tubes **46**, **50**. The bottom-out bumpers **72** serve to prevent direct contact between the upper tubes **44**, **48** and the lower tubes **46**, **50** when the fork **34** is in a fully compressed position. Accordingly, the bottom-out bumpers **72** are preferably made of an energy absorbing material, such as an elastomer or rubber.

The illustrated suspension fork **34** includes both a suspension spring assembly **74** and a damper assembly **76**. The suspension spring assembly **74** provides resistance to compression of the fork **34** and releases energy stored during compression to cause the fork **34** to extend, or rebound. The damper assembly **76** provides a damping force which resists both compression and rebound motion, to slow the motion of the suspension fork **34** in either direction, as is known. Preferably, the damper assembly **76** is contained within the right leg **40** of the suspension fork **34**, while the suspension spring assembly **74** is contained within the left leg **42**.

The suspension spring assembly **74** comprises a spring cap assembly **80** which closes the upper end of the left upper tube **48**. A seal **81** provides a preferably air and fluid-tight seal between the cap assembly **80** and the inner surface of the left upper tube **48**. A spring piston rod **84** extends vertically upward from the closed lower end of the lower left fork tube **50** and supports a spring piston **86**. The piston **86** includes a radial through-hole **85** which corresponds with a

through-hole **87** in the piston rod **84**. A pin **89** is press fit into the through-holes such that it engages the piston **86** on both sides of the piston rod **84** to secure the piston **86** thereto. The spring cap assembly **80** is fixed for movement with the left upper tube **48** and the spring piston **86** is fixed for movement with the left lower tube **50**.

The spring piston **86** is in sealing engagement with the inner surface of the left upper tube **48**. The cap assembly **80** and piston **86** define a positive air spring chamber **88** between them. A positive air valve **90** allows communication with the positive air spring chamber **88**. A standard high pressure pump may be attached to the positive air valve **90** in order to pressurize the positive air spring chamber **88**. Thus, when pressurized, the positive air spring chamber **88** acts as a suspension spring and exerts an extension force on the suspension fork assembly **34**. A cap **91** is preferably threaded onto the valve **90** to provide protection from damage and keep foreign matter away from the valve **90**.

A lower spring plate **92** is held within a counter bore of the upper fork tube **48** by a snap ring **93**. An upper spring stop **95** is fixed in an axial position on the spring piston rod **84** by a pin **97**, in a manner similar to the piston **86**, as described above. A negative spring chamber **94** is defined between the lower spring plate **92** and upper spring stop **95**. An outer negative spring **96** and an inner negative spring **98** are placed within the negative spring chamber **94**. Preferably, the outer spring **96** and inner spring **98** are coil-type springs arranged concentrically with each other and with the spring piston rod **84**. A pair of spring guides **99** assist in keeping the springs **96**, **98** concentric with the piston rod **84** and from contacting the inner surface of upper tube **48** when compressed.

The spring plate **92** includes an central aperture **101** which provides clearance for the spring piston rod **84** to pass through. A small amount of lubricating fluid, preferably approximately 30 cc's of a suitable hydraulic damping fluid, is provided in the left fork leg **42** to lubricate the seal **68**, bushings **64**, **66**, negative springs **96**, **98** and spring guides **99**.

Desirably, the outer negative spring **96** is of a greater length than the inner negative spring **98**. Preferably, the spring rates of the outer and inner negative springs **96**, **98** are selected such that the inner negative spring **98** is near its free-length when the suspension fork **34** is compressed by substantially only the weight of a rider of the bicycle **20**. Although the illustrated negative spring assembly comprises a dual coil spring arrangement, a single negative spring may also be used. In addition, an air spring arrangement similar to the positive air spring chamber **88** may also be used in place of the coil-type negative spring arrangement.

As described above, the damper assembly **76** is preferably housed within the right leg **40** of the suspension fork **34**. The damper assembly **76** is preferably an open-bath, cartridge-type damper having a cartridge tube **100** fixed to the closed lower end of the right lower tube **46** and extending vertically upward. A damper shaft **102** extends vertically downward from a damper cap assembly **104** and supports a rebound damping assembly **106** on its lower end. Thus, the rebound damping assembly **106** is fixed for movement with the right upper tube **44** while the cartridge tube **100** is fixed for movement with the right lower tube **46**.

The rebound damping assembly **106** is positioned within the cartridge tube **100** and is in telescoping engagement with the inner surface of the cartridge tube **100**. A cartridge tube cap **108** closes the upper end of the cartridge tube and is in sealing engagement with the damper shaft **102**. Thus, the cartridge tube defines a substantially sealed internal chamber, which contains the rebound damping assembly **106**.

The rebound damping assembly **106** divides the interior of the cartridge tube **100** into a rebound chamber **110** above the rebound damping assembly **106** and a compression chamber **112** below the rebound damping assembly **106**. A reservoir **114** is defined between the outer surface of the cartridge tube **100** and the inner surfaces of the right upper and lower tubes **44**, **46**. A base valve assembly **116** allows selective communication between the compression chamber **112** and the reservoir **114**.

The damper assembly **76** also includes a rebound adjust rod **118** which extends vertically downward from the damper cap assembly **104** within the central passage of the damper shaft **102**. An upper compression passage **120** is defined between the rebound adjust rod **118** and the inner surface of the damper shaft **102**. The upper compression passage **120** allows communication between the compression chamber **112** and the damper cap assembly **104**, as will be described in detail below.

FIG. **4** is an enlarged cross-section of the rebound damping assembly **106**. As described above, a cartridge tube cap **108** closes the cap end of the cartridge tube **100**. An outer seal **122** creates a seal between the cartridge tube cap **108** and the cartridge tube **100** while an inner seal **124** creates a seal between the cartridge tube cap **108** and the damper shaft **102**. Accordingly, extension and retraction of the damper shaft **102** is permitted while maintaining the rebound chamber **110** in a substantially sealed condition. The seals referred to herein may comprise O-rings or other suitable seals known to those of skill in the art. In addition, a bushing **125** is press fit into the cartridge tube cap **108** to prevent direct contact between the cap **108** and damper shaft **102**.

A rebound piston support shaft **126** is fixed within the lower opening of the damper shaft **102** and includes a seal **128** to prevent fluid from passing therebetween. Preferably, the rebound piston support shaft **126** and the damper shaft **102** are connected by a roll-crimping method. Specifically, an annular recess **127** is provided on the outer surface of the support shaft **126**. The damper shaft **102** is substantially cylindrical and is positioned on the support shaft **126** such that it overlaps the annular recess **127**. A roll-crimping machine rotates the damper shaft **102** and support shaft **126** assembly while it mechanically deforms the damper shaft **102** material into the recess **127** (as illustrated in FIG. **4**), thereby securing the support shaft **126** to the damper shaft **102**. As roll-crimping is known in the art, further description is not deemed necessary in order to practice the invention. While a roll-crimping process is preferred, other suitable methods may also be used to join the support shaft **126** to the damper shaft **102**.

A tubular piston rod extension **130** is fixed to the rebound adjust rod **118** by a threaded fastener **132**. A lower portion of the piston rod extension **130** includes external threads which mate with internal threads of the rebound piston support shaft **126**. Rotation of the rebound adjust rod **118** also rotates the piston rod extension **13(0** and results in axial movement of the piston rod extension **130** relative to the rebound piston support shaft **126**. Upward axial movement of the damper shaft **102** uncovers a bleed port **134**, which extends radially through the rebound piston support shaft **126**, while downward axial movement of the damper shaft **102** covers the bleed port **134**.

A rebound piston **136** is fixed to the lowermost end of the rebound piston support shaft **126** by a hollow piston bolt

138. The hollow passage of the piston bolt **138**, along with the hollow passage of the piston rod extension **130** define a lower compression passage **140**, which is in fluid communication with the compression chamber **112**. The upper end of the piston rod extension **130** includes an aperture, or transfer port **142**, which allows fluid communication between the upper compression passage **120** and the lower compression passage **140**, as indicated by the arrow F in FIG. **4**. Thus, fluid is able to flow from the compression chamber **112**, through the lower compression passage **140** and upper compression passage **120**, to the damper cap assembly **104**.

A lower end of the rebound piston support shaft **126** includes a shoulder **144** which provides a support surface for a spacer **146**. The spacer **146** engages the piston **136** to distance the piston **136** away from the shoulder **144**. A rebound piston seal **148** creates a seal between the rebound piston **136** and the inner surface of the cartridge tube **100**, thereby defining the rebound chamber **110** above the piston **136** and the compression chamber **112** below the rebound piston **136**. The rebound piston **136** includes a compression port **150** and a rebound port **152** extending substantially axially through the radially outer portion of the rebound piston **136**.

A check valve assembly **156** is arranged on the upper surface of the rebound piston **136** to selectively allow fluid communication from the compression chamber **112** to the rebound chamber **110** through the compression port **150**. The check valve **156** includes a check plate **158** biased into an engagement with the upper surface of the piston **136** by a check spring **160**. The check plate **158** is substantially annular in shape and capable of sliding axially with respect to the spacer **146**. The check spring **160** is preferably a flat helical spring having a relatively low spring constant such that the spring **160** biases the check plate **158** into contact with the upper surface of the piston **136** to seal the compression port **150** during rebound motion, but easily compresses such that the check plate **158** moves away from the piston **136** to allow fluid flow through the compression port **150** in response to compression motion of the suspension fork **34**.

A rebound shim stack **162** is secured to the lower surface of the rebound piston **136** by the piston bolt **138**. The rebound shim stack **162** may a single shim, or a stack comprised of multiple shims, which are substantially annular in shape and made from a flexible spring steel, as is known in the art. The rebound shim stack **162** selectively allows fluid communication between the rebound chamber **110** and the compression chamber **112** through the rebound port **152**. During compression motion of the suspension port assembly **34**, the rebound shim stack **162** is engaged with the lower surface of the piston **136** to prevent fluid from flowing through the rebound port **152**. During rebound motion of the suspension fork assembly **34**, the rebound shim stack **162** acts as a diaphragm spring and flexes in response to a sufficient force of fluid pressure in the rebound chamber **110**, to allow fluid flow through the rebound port **152** and into the compression chamber **112**.

A bleed port **163** extends axially through the cartridge tube cap **108** between the seal **124** and the bushing **125**. The bleed port **163** is sized such that air bubbles within the hydraulic fluid of the rebound chamber **110** can escape, without allowing an appreciable amount of fluid to pass therethrough. Advantageously, this construction prevents a loss of incompressibility of the fluid within the rebound chamber **110**.

FIG. **5** is an enlarged cross-section of the upper control assembly, or damper cap assembly **104**. The suspension fork **34** of FIGS. **1–7** utilizes a damper cap assembly **104** including a rebound adjustment control, as will be described in detail below.

The rebound adjust rod **118** and damper shaft **102** extend downward from the damper cap assembly **104** and define the upper compression passage **120** between them. As also described above, the damper cap assembly **104** closes the upper end of the right upper tube **44**. A cap seal **164** creates a seal between the damper cap assembly **104** and the inner surface of the right upper tube **44**. The rebound adjust rod **118** extends upward through the center of the damper cap assembly **104** and is fixed for rotation with a rebound adjustment knob **166** by a threaded fastener **168**. A rod seal **170** creates a seal between the rebound adjust rod **118** and a central passage of the damper cap assembly **104**.

The damper cap assembly **104** is comprised primarily of a cap body **172** and a shaft support **174**. The damper shaft **102** is roll-crimped to the shaft support **174** with a seal **176** preventing fluid flow therebetween. External threads on the upper portion of the shaft support **174** mate with internal threads of an internal channel of the cap body **172** and secure a compression piston **178** and compression shim stack **180** therebetween.

The shim stacks disclosed herein are preferably comprised of one or more annular shims, preferably made from thin steel, as is known to those of skill in the art. Each individual shim acts as a diaphragm spring which possesses an inherent spring rate when deflected about its central axis. As is known, a plurality of shims may be used to achieve a desired spring rate. The shims making up a single shim stack may vary in diameter, preferably with the largest diameter shim being located immediately adjacent the surface defining the ports through which the shim stack is controlling flow. For example, if a shim stack utilizing multiple diameter shims is used with the above-described damper cap assembly **104**, preferably the largest diameter shim is located immediately adjacent lower surface of the compression piston **178**.

The compression piston **178** is axially spaced from the cap body **172** by a shoulder **182** to create a compression chamber **184** between the upper surface of the piston **178** and the lower surface of the cap body **172**. Preferably the shoulder **182** is integral with the cap body **172**. A seal is created between the outer radial surface of the compression piston **178** and the cap body **172** by a piston seal **186**.

With reference to FIGS. **5** and **6**, the shaft support **174** includes radially extending ports **188** which allow fluid communication between the upper compression passage **120** and an annular transfer chamber **189** defined between the shaft support **174** and the shoulder **182**. Radial passages in the shoulder **182** allow fluid communication between the transfer chamber **189** and the compression chamber **184**. Thus, the radial ports **188** and radial passages **190** cooperate with the transfer chamber **189** to allow fluid communication between the upper compression passage **120** and the compression chamber **184**. Advantageously, the transfer chamber **189** allows fluid communication between the radial ports **188** and radial passages **190** despite their relative angular positions. Thus, as illustrated in FIG. **6**, it is not necessary that the radial ports **188** and radial passages **190** be aligned, because the transfer chamber **189** permits fluid flow to be directed therebetween. This feature enhances manufacturability and reduces cost because a threaded connection between the cap body **172** and shaft support **174** may be used.

The compression piston **178** includes a low speed compression port **192** and a plurality of mid-speed compression

ports **194** passing axially therethrough. As illustrated in FIG. **6**, the mid-speed compression ports **194** are disposed at a first radial distance D1 from a center axis A of the piston **178** while the low-speed compression ports are located a second radial distance D2 from the axis A. Preferably, the distance D1 is less than the distance D2. As a result, fluid flowing through the low speed compression port **192** has more leverage on the compression shim stack **180** in comparison to fluid flowing through the mid-speed compression port **194** and, accordingly, fluid flow is allowed through the low speed compression port **192** at a lower fluid pressure than is required to open the mid-speed compression ports **194**. Advantageously, this arrangement provides separate low and mid-speed damping circuits, while remaining compact and without adding undesired weight.

One or more high-speed compression ports **195** (illustrated in phantom) may be provided and be of a smaller diameter or located a smaller radial distance D3 from the axis A, or a combination thereof, than the mid-speed compression ports **194**. Such a construction would allow the high-speed compression ports to be relatively inactive at low and mid-speed shaft motion, while providing the primary damping force at high-speed shaft motion. Thus, it will be appreciated by one of skill in the art, that a plurality of port diameters and radial locations from the axis A may be used to achieve desired damping forces at specific shaft speeds. Also, as illustrated, a combination of ports may be used to provide varying damping forces over a range of shaft speeds.

With reference to FIG. **5**, the damper cap assembly **104** also includes a ball detent assembly **196**. The ball detent assembly **196** comprises a spring **198** placed between a set screw **200** and a ball bearing **202** to bias the ball bearing **202** into engagement with one of a plurality of recesses, or detents **204**, formed on the rebound adjust rod **118**. The spring rate of the spring **198** is selected such that the biasing force of the spring **198** may be easily overcome so that the rebound adjustment knob **166** may be turned by hand, while also providing positive feedback as to the relative position of the rebound adjust rod **118**. Preferably, four (4) detents **204** are equally spaced around the circumference of the rebound adjust rod **118**. Also, the rebound adjust rod **118** is desirably capable of rotating approximately three (3) revolutions between its upper position and its lower position. Accordingly, twelve (12) distinct rebound damping positions are defined by the rebound adjust rod **118** and the ball detent assembly **196**.

FIG. **7** is an enlarged cross-section of the lower control assembly, or base valve assembly **116**. The base valve assembly **116** allows selective communication between the reservoir **114** and the compression chamber **112**. The base valve assembly **116** generally comprises a valve body **206**, a shim bolt **208** and a check shim **210**. A lower portion of the shim bolt **208** includes external threads which mate with internal threads of the base valve body **206**. The shim bolt **208** includes a shaft portion **212** which centers the substantially annular check shim **210** with respect thereto. The shim bolt **208** also includes a shoulder portion **214** of larger diameter than the shaft portion **212** such that the check shim **210** is capable of limited axial movement between the upper surface of the base valve body **206** and a shoulder portion **214** of the shim bolt **208**.

A check spring **213** biases the check shim **210** into engagement with the top surface of the base valve body **206**. Preferably, the spring **213** is a conical coil spring having a low spring rate and small wire diameter so that it allows the check shim **210** to move easily away from the top surface of the base valve body **206**. The small end of the spring **213** engages the base valve body **206** while the large end engages the check shim **210**. Alternatively, a low axial travel shim without a spring may be used.

The radial outer portion of base valve body **206** also includes a plurality of refill ports **216** which pass axially therethrough. When the fluid pressure in the compression chamber **112** is greater than the fluid pressure in the reservoir **114**, the check spring **213** keeps the check shim **210** engaged with the top surface of the base valve body **206**, thus closing off the axial refill ports **216** and effectively preventing the flow of fluid therethrough. However, when the fluid pressure in the reservoir **114** is greater than the fluid pressure in the compression chamber **112**, the check shim **210** moves away from the base valve body **206**, against the small biasing force of the spring **213**, to allow fluid flow from the reservoir **114** to the compression chamber **112**, through the refill ports **216**. Advantageously, the configuration and spring rate of the check spring **213** allows the check shim **210** to move easily away from the top surface of the base valve body **206** in order to prevent flow restriction which could result in cavitation, but also returns the check shim **210** quickly into engagement with the base valve body on compression movement of the fork **34**.

The suspension fork assembly **34** described in relation to FIGS. **1–7** is capable of both compression, where the upper tubes **44**, **48** and the lower tubes **46**, **50** move closer together relative to each other and rebound, wherein the upper tubes **44**, **48** and the lower tubes **46**, **50** move farther apart in relation to each other. A fully compressed position is defined wherein the suspension fork **34** is compressed such that the lower-most surfaces of the upper tubes **44**, **48** come to rest against the pair of bottom-out bumpers **72**. A filly extended position is defined when the upper tubes **44**, **48** are retracted from the lower tubes **46**, **50** such that the outer and inner negative springs **96**, **98** are fully compressed between the negative spring chamber seal **92** and the spring piston **86**.

A ride height of the suspension fork assembly **34** is defined as the relative position between the upper tubes **44**, **48** and the lower tubes **46**, **50** when the suspension fork **34** is bearing the weight of a rider of the bicycle **20**, with substantially no other external forces being present. As mentioned above, the ride height is preferably such that the inner negative spring **98** is substantially near its free length, or its uncompressed length, when no other external force is exerted on the spring. The ride height can be adjusted to suit riders of different weights by tuning the positive air spring chamber **88** and/or the outer and inner negative springs **96**, **98**. Air can be added or removed from the positive air spring chamber **88** to adjust the pressure therein. The free length and/or spring rate of the outer and inner negative springs **96**, **98** may also be selected to achieve the desired ride height.

When the suspension fork **34** is in compression, such as when the front wheel **28** of the bicycle **20** encounters a bump, the air within the positive air spring chamber **88** functions as an air spring to progressively resist compression of the upper tubes **44**, **48** into the lower tubes **46**, **50**. The outer and inner negative springs **96**, **98** exert a compressive force on the suspension fork **34** and thereby assist the initial compressive motion between the upper tubes **44**, **48** and the lower tubes **46**, **50**. Advantageously, with such a construction, the negative springs **96**, **98** help to overcome any static friction present in the suspension fork **34**, due to the bushings and various seals, in order to allow initial compression with a minimal force input.

With reference to FIGS. **3–7**, the above-described damper assembly **76** includes various flow paths which provide

damping to the motion of the suspension fork **34** in both a compression and a rebound direction. The various flow paths can be generally categorized into compression circuits and rebound circuits. Of course, some passages may be utilized for both compression and rebound fluid flow. Desirably, the damper assembly **76** includes a sufficient volume of a suitable damping fluid such that at least the entire cartridge tube **100**, upper and lower compression passages **120**, **140** and damper cap assembly **104** may be filled, and enough damping fluid remains in the reservoir **114** to cover the refill ports **216** of the base valve assembly **116**.

During compression motion of the suspension fork **34**, the rebound piston **136** moves downward in relation to the cartridge tube **100** and, as a result, the fluid pressure within the compression chamber **112** increases. In response to the increased pressure in the compression chamber **112**, hydraulic fluid contained therein passes through the check valve assembly **156** of the rebound piston **136** to the rebound chamber **110**. As described above, the check spring **160** that biases the check plate **158** against the top surface of the rebound piston **136** desirably has a low spring rate and therefore offers little resistance to fluid flow through the compression ports **150**. Thus, fluid flow from the compression chamber **112** to the rebound chamber **110** through the check valve **156** serves primarily to fill the rebound chamber **110** and, desirably, provides little damping force.

Also in response to the increased pressure in the compression chamber **112**, fluid flows in an upward direction from the compression chamber **112** into the lower compression passage **140**. A portion of the fluid flows from the lower compression passage **140** through the bleed port **134** and into the rebound chamber **110**. As with the flow of fluid through the check valve **156**, the flow of fluid through the bleed port **134** serves primarily to fill the rebound chamber **110** and, preferably, does not provide a substantial damping force.

The remainder of the fluid continues to flow upward in the lower compression passage **140** and into the upper compression passage **120** through the transfer port **142**. With reference to FIG. **5**, the flow of fluid continues to travel upward through the upper compression passage **120** and into the damper cap assembly **104**. The flow of fluid then travels through both the radial port **188** of the shaft support **174** and the radial passage **190** of the piston shoulder **182** and into the compression chamber **184**, thus increasing the fluid pressure therein.

As described above, because the low speed compression port **192** is positioned further radially outward in comparison to the plurality of mid-speed compression ports **194**, the compression shim stack **180** is deflected from the lower surface of the compression piston **178** at lower fluid pressures than is necessary to deflect the shim stack **180** to open the mid-speed compression ports **194**. Thus, the primary damping force is provided by the flow through the low speed compression port **192** which is resisted by the compression shim stack **180** at low fluid pressures which correspond with low speed compressive motion.

As the compressive motion speed increases and therefore, fluid pressure within the compression chamber **184** increases, sufficient fluid pressure is created to deflect the compression shim stack **180** such that fluid is able to flow through the mid-speed compression ports **194**. At these compression speeds, the primary damping force as provided by the fluid flow through the mid-speed compression ports **194** which is resisted by the compression shim stack **180**.

Hydraulic fluid that exits through either the low speed or mid-speed compression ports **192**, **194** flows downward, due to gravity, to fill the lower portion of the reservoir **114**. In addition, because the damper assembly **76** is an open bath system, hydraulic fluid within the reservoir **114** is also able to move throughout the reservoir **114** and, advantageously, provides lubrication for the bushings **64**, **66** and various seals within the damper assembly **76**.

On rebound motion of the suspension fork **34**, the rebound piston **136** moves in an upward direction with respect to the cartridge tube **100**, thereby increasing the pressure in the rebound chamber **110**. In response to the increase in fluid pressure within the rebound chamber **110**, fluid flows through the bleed port **134** and downward through the lower compression passage **140** and then to the compression chamber **112**. As described above, the rebound adjustment knob **166** may be rotated to in turn rotate the rebound adjust rod **118** and cause the piston rod extension **130** to increase or decrease the exposed portion of the bleed port **134**. In this manner, the damping force provided by the restricted flow of fluid through the bleed port **134** may be adjusted. Advantageously, because the rebound adjustment knob **166** is disposed on the damper cap assembly **104**, it may be easily manually adjusted by the rider of the bicycle **20**, even while riding. In addition, no tools are necessary to change the damping rate and such adjustment may be made externally, without requiring disassembly of the suspension fork **34**.

Also in response to the increased pressure with the rebound chamber **110**, fluid flows through the rebound port **152** and, if the fluid pressure is greater than a predetermined threshold, deflects the rebound shim stack **162** away from the bottom surface of the rebound piston **136** to allow fluid to flow from the rebound chamber **110** to the compression chamber **112**. Rebound damping force is provided by the rebound shim stack **162** against the flow of fluid through the rebound port **152**.

The suspension fork **34** additionally includes a refill feature which operates to refill the compression chamber **112** during rebound motion. During rebound, the compression shim stack **180** within the damper cap assembly **104** creates a substantially air-tight seal with the lower surface of the compression piston **178**. As a result, the low pressure condition in the compression chamber **112** is not able to suction fluid from within the upper compression passage **120**. This ensures that the upper compression passage **120** and damper cap assembly **104** remain filled with fluid. Advantageously, the upper compression passage **120** and compression chamber **184** do not have to be refilled upon subsequent compression motion of the suspension fork **34** before producing a damping force. In addition, upon extension and, therefore, upward movement of the rebound piston **136** relative the cartridge tube **100**, the seal between the compression shim stack **180** and the compression piston **178** serves to draw fluid from the reservoir **114** and into the compression chamber **112** through the base valve assembly **116**.

FIGS. **8–10** illustrate relevant portions of an alternative embodiment of a suspension fork, generally indicated by the reference character **34'**. Suspension fork **34'**, in addition to having an adjustable rebound damping circuit, features a high-speed compression circuit (or blow-off) and a low/mid-speed compression lock-out. In most other respects, suspension fork **34'** is similar in both construction and function to the suspension fork **34** of FIGS. **1–7**. Accordingly, like components will be indicated with like reference numerals, except that a (') will be added.

With reference to FIG. **8**, the central passage of the cap body **172'** is increased in diameter to accommodate a lock-

out cylinder **218** positioned between the cap body **172'** and the rebound adjust rod **118'**. A seal **220** provides a substantially fluid and air-tight seal between the lock-out cylinder **218** and the inner surface of the central passage of the cap body **172'**. Additionally, cap seal **164'** provides a seal between the rebound adjust rod **118'** and the inner surface of a central passage of the lock-out cylinder **218**, rather than between the rebound adjust rod **118** and the cap body **172**, as in the previous embodiment.

The lock-out cylinder **218** includes a externally threaded portion **222** which mates with the internal threads of the cap body **172'**. Accordingly, rotation of the lock-out cylinder **218** results in corresponding axial movement of the lock-out cylinder **218** with respect to the cap body **172'**. Preferably, the mating threads of the cap body **172'** and the lock-out cylinder **218** are 10 mm diameter by 1 mm pitch, double-start threads. With such a construction, relatively large axial motion is achieved with a relatively small degree of rotation of the lock-out cylinder **218**.

A blocking sleeve **224** extends in a downward direction from, and is preferably unitary with, the lock-out cylinder **218**. The blocking sleeve **224** is configured to selectively allow fluid to pass, or substantially prevent fluid from passing, from the upper compression passage **120'** to the compression chamber **184'**. The lower end of the blocking sleeve **224** is configured to mate with a blocking sleeve seat **226** of the shaft support **174'**.

An upper-most, or "open", position of the lock-out cylinder **218** is defined when the blocking sleeve **224** is retracted such that the radial ports **188'** of the shaft support **174'** and the radial passages **190'** of the piston shoulder **182'** are substantially fully open, thereby allowing fluid to flow from the upper compression passage **120'** to the compression chamber **184'** (reference FIG. **6**). Conversely, a lower-most, or "closed", position of the lock-out cylinder **218** is defined when the blocking sleeve **224** is advanced such that the radial ports **188'** and radial passages **190'** are substantially fully closed, thereby substantially prohibiting the flow of fluid from the upper compression passage **120'** to the compression chamber **184'**. Desirably, the lock-out cylinder **218** moves between its open and closed positions with less than one revolution, preferably, with less than one-half revolution and, most preferably, with less than one-third revolution. The lock-out can be actuated more quickly and easily by the rider when the amount of rotation between the open and closed position is relatively small.

With reference to FIGS. **8** and **9**, a lock-out knob **228** is engaged with the upper portion of the lock-out cylinder **218** and is supported for rotation on the cap body **172'** by a ball bearing arrangement **230**. A plurality of ball bearings **232** travel within an annular recess **234** (FIG. **8**) defined by the cap body **172'** and are secured in recess **234** by a plurality of set screws **236**. The set screws **236** each have a substantially cone-shaped lower end **238** which engages one of the plurality of ball bearings **232**. Thus, the lock-out knob **228** is secured in an axial position with respect to the cap body **172'** while being capable of rotation with respect thereto.

As described above, the lock-out cylinder **218** engages the upper portion of the lock-out knob **228**. As illustrated in FIG. **9**, the mating portions of the lock-out cylinder **218** and the lock-out knob **228** each have a hex-shaped cross-section thereby fixing the lock-out cylinder **218** for rotation with the lock-out knob **228**. Simultaneously, the lock-out cylinder **218** is able to move axially with respect to the lock-out knob **228** by sliding motion between the hexshaped cross-sections.

The lock-out knob **228** also includes a lever portion **240** which provides a convenient surface for a rider of the bicycle **20** (FIG. **1**) to grasp in order to rotate the lock-out knob **228**. The lever portion **240** also provides a leverage advantage to increase the ease with which the lock-out knob **228** may be rotated.

With reference to FIG. **10**, a preferred base valve assembly **116'** for use in conjunction with the damper cap assembly **104'** described immediately above. In addition to the refill function of the base valve assembly **116** of the suspension fork **34** of FIGS. **1–7**, the present base valve assembly **116'** includes a blow-off circuit **242**. The blow-off circuit **242** selectively allows fluid flow from the compression chamber **112'** to the reservoir **114'** at high compressive fluid pressures or shaft speeds. Preferably, the blow-off circuit **242** remains closed at compressive fluid pressures below the threshold necessary to open the low and mid-speed compression circuits of the suspension fork **34'**.

The blow-off compression circuit **242** generally comprises a valve opening **244**, a blow-off piston **246** and a blow-off spring **248**. The valve opening **244** is defined by a central passage of the shim bolt **208'** and includes a blow-off piston seat **250**. The blow-off spring **248** is supported on a spring support shaft **252** and biases the blow-off piston into engagement with the blow-off piston seat **250** to substantially prevent fluid from passing through the valve opening **244** at fluid pressures below a predetermined threshold. This threshold is determined by a combination of the spring rate of the blow-off spring **248**, the preload on the spring **248** and the area of the blow-off piston **246** that is subject to fluid pressure from the compression chamber **112**. When fluid pressure in the compression chamber **112'** is above the predetermined threshold, the piston **246** is forced away from the piston seat **250** and allows fluid to flow through the valve opening **244** and through radial ports **254** in the base valve body **206'**into the reservoir **114'**, thus lowering the pressure within the compression chamber **112**.

When the lock-out knob **228** is positioned such that the lock-out cylinder **218** is at closed position, the flow of hydraulic fluid is prevented through the low, mid and high-speed compression circuits and the suspension fork **34'** is in a locked-out state, where substantially no relative motion is permitted between the upper fork tubes **44**, **48** and the lower fork tubes **46**, **50** (FIG. **2**). Advantageously, this prevents rider pedal energy from being absorbed by the suspension fork **34** thereby allowing such energy to instead promote forward motion of the bicycle **20** (FIG. **1**). If a large bump is encountered, such that the pressure within the compression chamber rises above the threshold necessary to open the blow-off valve **242**, the valve **242** operates to allow fluid flow from the compression chamber **112'** to the reservoir **114'**. Advantageously, this prevents damage to the various seals of the suspension fork **34'** and prevents the entire force of the bump from being transferred to the rider.

The placement of the lock-out knob **228** on the damper cap assembly **104'** allows easy access to the rider of the bicycle **20** (FIG. **1**), even while riding. This is advantageous because a wide variety of terrain may be encountered in a single ride such that "on-the-fly" (while riding) actuation of the lock-out knob **228** is highly desirable. Furthermore, because the low, mid and high-speed compression circuits are locked-out within the damper cap assembly **104'**, the lock-out cylinder **218** remains mechanically simple and compact, thereby decreasing the likelihood of failure, saving weight and reducing the cost of manufacture in comparison to lock-out assemblies located in the middle or lower region of the fork leg, which often require complex actuation mechanisms.

FIGS. **11–14** illustrate relevant portions of another embodiment of a suspension fork, generally indicated by the reference character **34**". Suspension fork **34**", in addition to having an adjustable rebound damping circuit, a blow-off circuit and a low/mid-speed compression lock-out of the previously described suspension forks **34**, **34**', respectively, includes adjustable low-speed compression damping and blow-off pressure. In most other respects, suspension fork **34**" is similar in both construction and function to the suspension fork **34** and **34**'of FIGS. **1–7** and **8–10**, respectively. Accordingly, like components will be indicated with like reference numerals, except that a (") will be added.

The damper cap assembly **104**" includes a low-speed compression damping adjustment assembly **256**, which generally comprises a low-speed compression adjustment knob **258**, an adjustment needle **260** and a needle spring **262**. The adjustment needle **260** is supported for axial movement within a needle aperture **264**, which extends axially through the cap body **172**", and above the low speed compression port **192**". A seal **266** provides a seal between the adjustment needle **260** and the cap body **172**".

The adjustment needle **260** includes an annular flange, or needle stop **268**, which interferes with the cap body **172**" to define the upper most position of the adjustment needle **260** with respect to the compression piston **178**". In its uppermost position, a lower tapered end **270** of the adjustment needle **260** preferably does not substantially interfere with fluid flow through the low-speed compression port **192**". The needle stop **268** also functions as an engagement surface for the needle spring **262**, which is positioned between the needle stop **268** and the upper surface of the compression piston **178**" to bias the adjustment needle **260** into its uppermost position. A lowermost position of the adjustment needle **260** is defined when the needle **260** is force in a downward direction, overcoming the biasing force of the needle spring **262**, by the low-speed compression knob **258**, as will be described below. In its lowermost position, the tapered end **270** of the needle **260** is positioned within the low-speed compression port **192**" to substantially inhibit fluid flow therethrough. In this manner, the damping force at low shaft speeds is increased. If desired, the needle **260** may be configured to seat with the lowspeed compression port **192**" in its lowermost position, thereby effectively preventing fluid flow through the low-speed compression port **192**".

The low speed compression adjustment knob **258** is positioned between the lock-out knob **228**" and the cap body **172**" for rotation with respect to the cap body **172**". The adjustment knob **258** engages the adjustment needle **260** to move the needle **260** between its uppermost and lowermost positions. The adjustment knob **258** includes an arcuate needle adjustment channel **272** (FIGS. **12** and **13**), which extends radially about a central axis of the adjustment knob **258** for a specified angle θ. Desirably, the angle is between 90 and 180° Preferably, the angle is approximately 144°. This range provides a desirable amount of adjustment while keeping the rotation of the adjustment knob **258** small enough to be comfortable to actuate while riding.

The upper surface of the channel **272** defines a needle ramp surface **274**, which is inclined relative to the upper surface of the compression piston **178**". An engagement surface **276** (FIG. **11**), defined by the upper portion of the adjustment needle **260**, engages the ramp surface **274** of the adjustment knob **258** such that rotation of the adjustment knob **258** moves the adjustment needle **260** substantially between its uppermost and lowermost positions. Each end of the channel **272** defines a stop surface **278**, which interferes with the upper end of the adjustment needle **260** to define the limits of the range of motion for rotation of the adjustment knob **258**. Preferably, a vertical distance V (FIG. **13**) between the shallowest end of the ramp surface **274** and the deepest end of the ramp surface **274** is approximately 0.10 inches. Accordingly, the height of the tapered end **270** of the adjustment needle **260** varies by 0.10 inches with respect to the upper surface of the compression piston **178**" when the adjustment knob **258** is rotated through its fall range of motion.

The adjustment knob **258** additionally includes a ball detent mechanism **280**, which is similar in both structure and operation to the detent mechanism **196**" associated with the rebound adjust rod **118**". The ball detent mechanism **280** includes a ball bearing **282** which is biased into engagement with one of a plurality of detents **284**, defined by the adjustment knob **258**, by a spring **286**. Both the ball bearing **282** and the spring **286** are contained within a spring pocket **288**, which is defined by the cap body **172**". Preferably, nine (9) detents are provided throughout the range of motion of the adjustment knob **258**, thereby providing nine (9) positive reference positions, which define individual settings of the low-speed compression adjustment assembly **256**.

The adjustment knob **258** also includes an annular flange which defines a finger grip portion **290**. The outer peripheral surface of the finger grip portion **290** includes a plurality of recesses **292**, which preferably extend entirely around the finger grip portion **290**. The recesses **292** provide an interrupted surface, which permits the adjustment knob **258** to be easily rotated, even in muddy or wet conditions.

Advantageously, the construction of the damper cap assembly **104**" allows the level of low-speed compression damping to be adjusted externally, without necessitating disassembly of the suspension fork **34**". In addition, the level of low-speed compression damping may be adjusted on-the-fly. This provides an important advantage if the terrain conditions change over the course of a ride, or race, or if it turns out that the initial setting was less than desirable.

With reference to FIG. **14**, a preferred base valve assembly **116**" is illustrated for use in conjunction with the damper cap assembly **104**" described immediately above. In addition to the refill function and the blow-off circuit **242**, the present base valve assembly **116**" of FIG. **14** includes a blow-off adjustment assembly **294**.

To provide the capability of adjusting the blow-off circuit, the blow-off spring support shaft **262**" extends through an open end **296** of the base valve body **206**". The support shaft **262**" includes an externally threaded portion **298**, which mates with internal threads **300** of the base valve body **206**". With this construction, rotation of the blow-off spring support shaft **262**" is converted to axial movement of the support shaft **262**" in relation to the base valve body **206**". Axial movement of the support shaft **262**" varies the relaxed length of the blow-off spring **248**", and thereby varies the preload on the spring **248**". The preload of the blow-off spring **248**" influences the threshold fluid pressure within the compression chamber **112**" which is necessary to open the blow-off valve **242**". More preload raises the threshold pressure, while less preload decreases the threshold pressure.

A blow-off adjustment knob **302** is secured to the lower, exposed end of the support shaft **262**" by a set screw **304**. The adjustment knob **302** allows the support shaft to be rotated easily by hand. A seal **305** creates a seal between the support shaft **262**" and the base valve body **206**" to substantially inhibit fluid from passing therebetween.

The blow-off adjustment assembly **294** also includes a ball detent assembly **306**, which is similar to the ball detent

assemblies described above. The ball detent assembly **306** includes a ball bearing **308** biased into engagement with a detent **310** defined by the support shaft **262**" by a spring **312**. The ball bearing **308** and spring **312** are secured within a cavity **314** by a set screw **316**. Preferably, four (4) detents **310** are provided and the support shaft **262**" is capable of making three (3) revolutions, thereby defining twelve (12) blow-off damping adjustment positions.

Advantageously, the suspension fork **34**" described immediately above provides a wide range of both compression and rebound adjustment. Low-speed compression, rebound damping, blow-off pressure, as well as a compression lock-out feature, may all be accessed, and adjusted, externally and without the use of any tools. In addition, the low-speed compression and rebound damping circuits, and lock-out, controls are conveniently located on the upper portion of the suspension fork **34**". As a result, "on-the-fly" access to the abovementioned controls is provided, thereby permitting damping adjustment and actuation of the lock-out feature while the bicycle **20** (FIG. **1**) is being ridden. Such a construction provides a distinct advantage by allowing initial damping settings to be adjusted, and the lock-out feature actuated, during the course of a ride or race.

FIGS. **15** and **16** illustrate a coil-sprung embodiment of the suspension fork, indicated generally by the reference character **34**'". Suspension fork **34**'" is similar in both construction and flnction to the previously described suspension forks **34**, **34**' and **34**". Accordingly, like components will be indicated with like reference numerals, except that a ('") will be added.

The coil-sprung fork **34**'" utilizes a pair of positive coil springs to provide an expansion force on the fork **34**'". A first spring **320** is located in the right fork leg **40**'", along with the damper assembly **76**'", while a second spring **322** is located in the left leg **42**'", in place of the air spring arrangement of the previous embodiments. When suspension action is of primary concern, rather than the overall weight of the fork assembly, a pair of coil springs may be advantageous. With a coil spring **320**, **322** located in each of the fork legs **40**'", **42**'", respectively, the expansion force on the fork **34**'" is more equally balanced between the fork legs **40**'", **42**'". This enhances the coaxial telescopic motion of the upper legs **44**'", **48**'" relative to the lower legs **46**'", **50**'" during compression and rebound for smooth motion with reduced binding.

The first spring **320** is positioned in the right leg **40**'" between the damper cap assembly **104**'" and the cartridge tube cap **108**'". A pair of spacers, including a first spacer **324** and a second spacer **326**, are interposed between the damper cap assembly **104**'" and the first spring **320**. The spacers **324**, **326** are preferably substantially C-shaped so that they may be easily removed from the damper shaft **102**'" in a radial direction. Desirably, the spacers **324**, **326** are configured to engage the damper shaft **102**'" in a snap fit arrangement.

A spring guide **328** is positioned between the spring **320** and the spacer immediately adjacent the spring **320** (spacer **326** in the illustrated embodiment) to assist in keeping the spring **320** concentric with the damper shaft **102**'". The cartridge tube cap **108**'" functions as a spring guide for the lower end of the first spring **320**. However, a separate spring guide member may also be provided.

The second spring **322** is positioned in the left leg **42**'" between the spring cap assembly **80**'" and the upper spring stop **95**'". A first spacer **324** and a second spacer **326** are positioned between the spring cap assembly **80**'" and the spring **322**. Desirably, the first and second spacers **324**, **326** are substantially identical to the spacers described above in relation to the first spring **320**.

A preload adjuster assembly **330** is desirably provided to allow adjustment of the preload on the second spring **322**. The preload adjuster assembly **330** generally comprises an adjuster cap **332**, an adjuster shaft **334**, a barrel **336** and an adjuster knob **338**. The cap **332** is sealingly engaged with upper open end of the upper tube **48**'". The cap **332** includes a central aperture which allows the adjuster shaft **334** to pass through, preferably in a sealed arrangement. The adjuster knob **338** is fixed to the adjuster shaft **334** by fastener **340** such that rotation of the adjuster knob **338** results in rotation of the adjuster shaft **334**. A ball detent assembly **341**, substantially similar to those described above, may be provided between the cap **332** and the adjuster knob **338** to define a plurality of preload adjustment positions.

The barrel **336** is threadably engaged with the adjuster shaft **334** and engages the upper most spacer **326**. In addition, the barrel **336** includes a ball pocket for holding a ball bearing **342**, which rides within an axial groove **344** defined by the adjuster cap **332**. This arrangement prevents the barrel **336** from rotating relative to the adjuster cap **332**. Accordingly, rotation of the adjuster shaft **334**, via the adjuster knob **338**, results in translation of the barrel **336** relative to the adjuster cap **332**. A change in the axial position of the barrel **336** alters the preload force on the spring **322**.

The upper spring stop **95**'" is roll-crimped to a plunger rod **346** which extends upward from the closed end of the lower fork tube **50**'". The upper stop **95**'" includes an o-ring **348** which serves as a spring guide for the lower end of the spring **322**. The o-ring **348** is preferred because it's compressibility allows a single size of o-ring to accommodate a number of different spring inner diameters. The inner diameter of a spring may vary with different spring rates, therefore, the o-ring **348** allows a number of springs **322** having varying spring rates to be used with the fork **34**'". A negative spring chamber **94**'" is defined between the upper spring stop **95**'" and the lower spring stop **92**'". A single negative spring **96**'" is provided, rather than the dual negative coil spring arrangement of previous embodiments.

The fork assembly **34**'" of FIGS. **15** and **16** is capable of being adjusted for varying amounts of travel, or total distance between it's fully compressed and fully extended positions. With reference to FIG. **16**, the fork **34**'" has been configured to have less travel than the fork **34**'" as configured in FIG. **15**. To accomplish this, the spacers **324**, **326** of the left leg **42**'" were moved from their position between the upper end of the spring **322** and the spring cap assembly **80**'" to a position below the plunger rod **346**. Specifically, the upper spring guide **99**'" is slid downward on the plunger rod **346** and the spacers **324**, **326** are positioned between the upper spring guide **99**'" and the upper spring stop **95**'". This lowers the upper tubes **44**'", **48**'" relative to the lower tubes **46**'", **50**'" and shortens the travel of the fork **34**'" by the combined length of the spacers **324**, **326**. In order to accommodate the shorter travel configuration without altering the preload on the first compression spring **320**, the spacers **324**, **326** (FIG. **15**) are removed from the right fork leg **40**.

Preferably, the first spacer **324** is approximately 20 mm in length and the second spacer **326** is approximately 25 mm in length. The travel of the fork **34**'" as configured in FIG. **15** is approximately 125 mm. As configured in FIG. **16**, the travel is reduced to 80 mm. Alternatively, only one of the spacers **324**, **326** may be positioned below the upper spring

stop **95'''** while the other spacer remains positioned above the spring **324**. With this configuration, the fork travel would be shortened by the length of the spacer positioned below the upper spring stop **95'''**, either 20 mm or 25 mm. The corresponding spacer **324**, **326** would be removed from the right fork leg **40**, to maintain the desired preload on the spring **320**, as described above. Additionally, varying spacer configurations could be used. For example, the spacers **324**, **326** could be replaced by a single spacer. Also, spacers of other lengths may be used, as can readily be determined by one of skill in the art.

Although this invention has been described in terms of certain embodiments, other embodiments apparent to those of ordinary skill in the art are also within the scope of this invention. Thus, various changes and modifications may be made without departing from the spirit and scope of this invention. In addition, various combinations of the preferred embodiments are possible. For example, any of the base valve assemblies may be used in conjunction with any of the damper cap assemblies, if desired.

Additionally, various arrangements of the damper and suspension spring elements may be used. For example, the damper assembly and spring assembly may be contained within a single leg of the fork, with the other leg being substantially empty. Further, the fork could configured to have a single fork leg, with both the damper and suspension spring elements being arranged within the single leg. Also, the fork may be configured for use with other vehicles, such as a road bicycle or motorcycle, for example. Accordingly, the scope of the invention is intended to be defined only by the appended claims.

What is claimed is:

1. A bicycle front fork, comprising:

an upper tube having a top portion, a bottom portion and an intermediate portion;

a lower tube having a top portion, a bottom portion and an intermediate portion, said upper tube and said lower tube being telescopingly movable with respect to one another;

an upper control assembly positioned at said top portion of said upper tube;

a damping cartridge positioned at least partly within said lower tube, said damping cartridge defining a top portion, a bottom portion and an intermediate portion, at least a section of said lower tube surrounding said cartridge at least partially defining a reservoir;

a shaft extending from said top portion of said upper tube into said damping cartridge;

a main damping piston connected to said shaft and positioned in said cartridge, at least said bottom portion of said cartridge defining a lower internal chamber located below said piston, said piston, said shaft and said control assembly cooperating to define a flow channel from said chamber through said piston, said shaft and said control assembly to said reservoir.

2. The fork of claim **1**, wherein said bottom portion of said damping cartridge defines a lower control assembly permitting fluid to enter said cartridge from said reservoir through said lower control assembly, but preventing fluid from exiting said cartridge at low pressure levels.

3. The fork of claim **2**, wherein said upper control assembly comprises a one-way valve which prevents the flow of fluid from said reservoir through said control assembly when said shaft and said piston move upward away from said bottom portion of said damping cartridge.

4. The fork of claim **3**, wherein said upper control assembly comprises compression damping force by means of a shim stack.

5. The fork of claim **3**, wherein said upper control assembly further comprises a lock-out valve which selectively prevents the flow of fluid from said shaft through said assembly and to said reservoir.

6. The fork of claim **5**, further comprising a lever for operating said lock-out valve positioned at the top portion of said upper tube.

7. The fork of claim **6**, further comprising a control rod extending through said shaft, wherein movement of said control rod adjusts flow through a rebound circuit positioned within said cartridge.

8. The fork of claim **7**, further comprising a control knob connected to said control rod, wherein moving said control knob results in movement of said control rod.

9. The fork of claim **7**, further comprising a blow off valve positioned at said bottom portion of said cartridge to permit flow through said blow off valve and into said reservoir in response to a threshold blow off pressure.

10. The fork of claim **9**, wherein said blow off valve is adjustable to permit said threshold blow off pressure to be changed.

11. A bicycle front fork, comprising:

an upper tube having a top portion, a bottom portion and an intermediate portion;

a lower tube having a top portion, a bottom portion and an intermediate portion, said upper tube and said lower tube being telescopingly moveable with respect to one another;

an upper control assembly positioned at said top portion of said upper tube;

a damping cartridge positioned at least partly within said lower tube, said damping cartridge defining an upper portion, a bottom portion and an intermediate portion, at least a section of said lower tube surrounding said cartridge defining a reservoir, said bottom portion of said damping cartridge defining a lower control assembly permitting fluid to enter said cartridge from said reservoir through said lower control assembly, but preventing fluid from exiting said cartridge at low pressure levels;

a shaft extending from said top portion of said upper tube into said damping cartridge;

a main damping piston connected to said shaft and positioned in said cartridge, at least said bottom portion of said cartridge defining a lower internal chamber located below said piston, said shaft and said upper control assembly cooperating to define a flow channel from said chamber through said shaft and said upper control assembly to said reservoir, wherein said upper control assembly comprises a one-way valve which prevents the flow of fluid from said reservoir through said control assembly when said shaft and said piston move upward away from said bottom portion of said damping cartridge.

12. The fork of claim **11**, wherein said upper control assembly comprises compression damping force by means of a shim stack.

13. The fork of claim **12**, wherein said upper control assembly further comprises a lock-out valve which selectively prevents the flow of fluid from said shaft through said assembly and to said reservoir.

14. The fork of claim **13**, further comprising a lever for operating said lock-out valve positioned at the top portion of said upper tube.

15. The fork of claim **13**, further comprising a control rod extending through said shaft, wherein movement of said control rod adjusts flow through a rebound circuit positioned within said cartridge.

16. The fork of claim 15, further comprising a control knob connected to said control rod, wherein moving said control knob results in movement of said control rod.

17. The fork of claim 15, further comprising a blow off valve positioned at said bottom portion of said cartridge to permit flow through said blow off valve and into said reservoir in response to a threshold blow off pressure.

18. The fork of claim 17, wherein said blow off valve is adjustable to permit said threshold blow out pressure to be changed.

19. The fork of claim 13, further comprising a blow off valve positioned at said bottom portion of said cartridge to permit flow through said blow off valve and into said reservoir in response to a threshold blow off pressure.

20. The fork of claim 13, wherein said blow off valve is adjustable to permit said threshold blow out pressure to be changed.

21. A bicycle front fork, comprising:

an upper tube having a top portion, a bottom portion and an intermediate portion;

a lower tube having a top portion, a bottom portion and an intermediate portion, said upper tube and said lower tube being telescopingly moveable with respect to one another;

an upper control assembly positioned at said top portion of said upper tube;

a damping cartridge positioned at least partly within said lower tube, said damping cartridge defining an upper portion, a bottom portion and an intermediate portion, at least a section of said lower tube surrounding said cartridge defining a reservoir;

a shaft extending from said top portion of said upper tube into said damping cartridge;

a main damping piston connected to said shaft and positioned in said cartridge, at least said bottom portion of said cartridge defining a lower internal chamber located below said piston, said piston, said shaft and said control assembly cooperating to define a flow channel from said chamber through said shaft and said control assembly to said reservoir, wherein said upper control assembly further comprises a lock-out valve which selectively prevents the flow of fluid from said shaft through said assembly and to said reservoir.

22. The fork of claim 21, further comprising a lever for operating said lock-out valve positioned at the top portion of said upper tube.

23. The fork of claim 22, further comprising a spring located in said upper tube above said cartridge and below said control assembly.

24. The fork of claim 23, wherein said bottom portion of said damping cartridge defines a lower control assembly permitting fluid to enter said cartridge from said reservoir through said lower control assembly, but preventing fluid from exiting said cartridge at low pressure levels.

25. The fork of claim 24, wherein said upper control assembly comprises a one-way valve which prevents the flow of fluid from said reservoir through said control assembly when said shaft and said piston move upward away from said bottom portion of said damping cartridge.

26. The fork of claim 25, further comprising a control rod extending through said shaft, wherein movement of said control rod adjusts flow through a rebound circuit positioned within said cartridge.

27. The fork of claim 26, further comprising a control knob connected to said control rod, wherein moving said control knob results in movement of said control rod.

28. The fork of claim 26, further comprising a blow off valve positioned at said bottom portion of said cartridge to permit flow through said blow off valve and into said reservoir in response to a threshold blow off pressure.

29. The fork of claim 28, wherein said blow off valve is adjustable to permit said threshold blow off pressure to be changed.

30. The fork of claim 21, further comprising a blow off valve positioned at said bottom portion of said cartridge to permit flow through said blow off valve and into said reservoir in response to a threshold blow off pressure.

31. The fork of claim 30, wherein said blow off valve is adjustable to permit said threshold blow off pressure to be changed.

32. The fork of claim 21, wherein said bottom portion of said damping cartridge defines a lower control assembly permitting fluid to enter said cartridge from said reservoir through said lower control assembly, but preventing fluid from exiting said cartridge at low pressure levels.

33. The fork of claim 21, wherein said upper control assembly comprises a one-way valve which prevents the flow of fluid from said reservoir through said control assembly when said shaft and said piston move upward away from said bottom portion of said damping cartridge.

34. The fork of claim 21, further comprising a control rod extending through said shaft, wherein movement of said control rod adjusts flow through a rebound circuit positioned within said cartridge.

35. A bicycle front fork, comprising:

an upper tube having a top portion, a bottom portion and an intermediate portion;

a lower tube having a top portion, a bottom portion and an intermediate portion, said upper tube and said lower tube being telescopingly moveable with respect to one another;

an upper control assembly positioned at said top portion of said upper tube;

a damping cartridge positioned at least partly within said lower tube, said damping cartridge defining an upper portion, a bottom portion and an intermediate portion, at least a section of said lower tube surrounding said cartridge defining a reservoir;

a shaft extending from said top portion of said upper tube into said damping cartridge;

a main damping piston connected to said shaft and positioned in said cartridge, at least said bottom portion of said cartridge defining a lower internal chamber located below said piston, said piston, said shaft and said control assembly cooperating to define a flow channel from said chamber through said shaft and said control assembly to said reservoir, further comprising a blow off valve positioned at said bottom portion of said cartridge to permit flow through said blow off valve and into said reservoir in response to a threshold blow off pressure.

36. The fork of claim 35, wherein said blow off valve is adjustable to permit said threshold blow off pressure to be changed.

37. The fork of claim 36, further comprising a spring located in said upper tube above said cartridge and below said control assembly.

38. The fork of claim 37, wherein said upper control assembly further comprises a lock-out valve which selectively prevents the flow of fluid from said shaft through said assembly and to said reservoir.

39. The fork of claim 38, further comprising a lever for operating said lock-out valve positioned at the top portion of said upper tube.

40. The fork of claim 39, further comprising a control rod extending through said shaft, wherein movement of said

control rod adjusts flow through a rebound circuit positioned within said cartridge.

41. The fork of claim **40**, further comprising a control knob connected to said control rod, wherein moving said control knob results in movement of said control rod.

42. The fork of claim **35**, further comprising a spring located in said upper tube above said cartridge and below said control assembly.

43. The fork of claim **35**, wherein said upper control assembly further comprises a lock-out valve which selectively prevents the flow of fluid from said shaft through said assembly and to said reservoir.

44. The fork of claim **35**, further comprising a control rod extending through said shaft, wherein movement of said control rod adjusts flow through a rebound circuit positioned within said cartridge.

45. A bicycle front fork, comprising:

an upper tube having a top portion, a bottom portion and an intermediate portion;

a lower tube having a top portion, a bottom portion and an intermediate portion, said upper tube and said lower tube being telescopingly moveable with respect to one another;

a shaft extending axially from said top portion of said upper tube;

a main damping piston connected to said shaft, said piston at least partially defining a damping chamber;

said fork defining a low speed compression circuit and a rebound circuit;

a control assembly located at said top portion of said upper tube, said control assembly including a first control connected to said low speed compression circuit manually adjustable from external said assembly between at least a first position wherein fluid is able to flow through said low speed compression circuit and a second position wherein flow through said low speed compression circuit is prevented, said control assembly further including a second control connected to said rebound circuit manually adjustable from external said assembly between at least a first position wherein a first rate of flow through said rebound circuit is permitted and a second position wherein a second rate of flow through said rebound circuit is permitted, wherein said first rate of flow is higher than said second rate of flow, said control assembly further comprising a third control connected to a restrictor communicating with said low speed compression circuit, said restrictor manually movable from external said assembly between at least a first position wherein said restrictor provides at least a first amount of resistance to flow through said low speed compression circuit and a second position wherein said restrictor provides a second amount of resistance to flow through said low speed compression circuit.

46. The fork of claim **45**, wherein said low speed circuit extends through said control assembly.

47. The fork of claim **45**, wherein said rebound circuit extends through said control assembly.

48. A shock absorber, comprising:

an upper tube having a top portion, a bottom portion and an intermediate portion;

a lower tube having a top portion, a bottom portion and an intermediate portion, said upper tube and said lower tube being telescopingly movable with respect to one another;

an upper control assembly positioned at said top portion of said upper tube;

a damping cartridge positioned at least partly within said lower tube, said damping cartridge defining a top portion, a bottom portion and an intermediate portion, at least a section of said lower tube surrounding said cartridge at least partially defining a reservoir;

a shaft extending from said top portion of said upper tube into said damping cartridge;

a main damping piston connected to said shaft and positioned in said cartridge, at least said bottom portion of said cartridge defining a lower internal chamber located below said piston, said piston, said shaft and said control assembly cooperating to define a flow channel from said chamber through said piston, said shaft and said control assembly to said reservoir.

49. The shock absorber of claim **48**, wherein said bottom portion of said damping cartridge defines a lower control assembly permitting fluid to enter said cartridge from said reservoir through said lower control assembly, but preventing fluid from exiting said cartridge at low pressure levels.

50. The shock absorber of claim **49**, wherein said upper control assembly comprises a one-way valve which prevents the flow of fluid from said reservoir through said control assembly when said shaft and said piston move upward away from said bottom portion of said damping cartridge.

51. The shock absorber of claim **50**, wherein said upper control assembly further comprises a lock-out valve which selectively prevents the flow of fluid from said shaft through said assembly and to said reservoir.

52. The shock absorber of claim **51**, further comprising a control rod extending through said shaft, wherein movement of said control rod adjusts flow through a rebound circuit positioned within said cartridge.

53. The shock absorber of claim **52**, further comprising a blow off valve positioned at said bottom portion of said cartridge to permit flow through said blow off valve and into said reservoir in response to a threshold blow off pressure.

54. The shock absorber of claim **48**, wherein said upper control assembly comprises a one-way valve which prevents the flow of fluid from said reservoir through said control assembly when said shaft and said piston move upward away from said bottom portion of said damping cartridge.

55. A bicycle, comprising:

a frame;

a suspension fork connected to said frame and comprising:

an upper tube having a top portion, a bottom portion and an intermediate portion;

a lower tube having a top portion, a bottom portion and an intermediate portion, said upper tube and said lower tube being telescopingly movable with respect to one another;

an upper control assembly positioned at said top portion of said upper tube;

a damping cartridge positioned at least partly within said lower tube, said damping cartridge defining a top portion, a bottom portion and an intermediate portion, at least a section of said lower tube surrounding said cartridge at least partially defining a reservoir;

a shaft extending from said top portion of said upper tube into said damping cartridge;

a main damping piston connected to said shaft and positioned in said cartridge, at least said bottom portion of said cartridge defining a lower internal chamber located below said piston, said piston, said shaft and said control assembly cooperating to define a flow channel from said chamber through said piston, said shaft and said control assembly to said reservoir.

56. The bicycle of claim **55**, wherein said bottom portion of said damping cartridge defines a lower control assembly permitting fluid to enter said cartridge from said reservoir through said lower control assembly, but preventing fluid from exiting said cartridge at low pressure levels.

57. The bicycle of claim **56**, wherein said upper control assembly comprises a one-way valve which prevents the flow of fluid from said reservoir through said control assembly when said shaft and said piston move upward away from said bottom portion of said damping cartridge.

58. The bicycle of claim **57**, wherein said upper control assembly further comprises a lock-out valve which selectively prevents the flow of fluid from said shaft through said assembly and to said reservoir.

59. The bicycle of claim **58**, further comprising a control rod extending through said shaft, wherein movement of said control rod adjusts flow through a rebound circuit positioned within said cartridge.

60. The bicycle of claim **59**, further comprising a blow off valve positioned at said bottom portion of said cartridge to permit flow through said blow off valve and into said reservoir in response to a threshold blow off pressure.

61. A vehicle front fork, comprising:

an upper tube having a top portion, a bottom portion and an intermediate portion;

a lower tube having a top portion, a bottom portion and an intermediate portion, said upper tube and said lower tube being telescopingly movable with respect to one another;

an upper control assembly positioned at said top portion of said upper tube;

a damping cartridge positioned at least partly within said lower tube, said damping cartridge defining a top portion, a bottom portion and an intermediate portion, at least a section of said lower tube surrounding said cartridge at least partially defining a reservoir;

a shaft extending from said top portion of said upper tube into said damping cartridge;

a main damping piston connected to said shaft and positioned in said cartridge, at least said bottom portion of said cartridge defining a lower internal chamber located below said piston, said piston, said shaft and said control assembly cooperating to define a flow channel from said chamber through said piston, said shaft and said control assembly to said reservoir.

62. A vehicle front fork, comprising:

an upper tube having a top portion, a bottom portion and an intermediate portion;

a lower tube having a top portion, a bottom portion and an intermediate portion, said upper tube and said lower tube being telescopingly moveable with respect to one another;

an upper control assembly positioned at said top portion of said upper tube;

a damping cartridge positioned at least partly within said lower tube, said damping cartridge defining an upper portion, a bottom portion and an intermediate portion, at least a section of said lower tube surrounding said cartridge defining a reservoir, said bottom portion of said damping cartridge defining a lower control assembly permitting fluid to enter said cartridge from said reservoir through said lower control assembly, but preventing fluid from exiting said cartridge at low pressure levels;

a shaft extending from said top portion of said upper tube into said damping cartridge;

a main damping piston connected to said shaft and positioned in said cartridge, at least said bottom portion of said cartridge defining a lower internal chamber located below said piston, said shaft and said upper control assembly cooperating to define a flow channel from said chamber through said shaft and said upper control assembly to said reservoir, wherein said upper control assembly comprises a one-way valve which prevents the flow of fluid from said reservoir through said control assembly when said shaft and said piston move upward away from said bottom portion of said damping cartridge.

63. A vehicle front fork, comprising:

an upper tube having a top portion, a bottom portion and an intermediate portion;

a lower tube having a top portion, a bottom portion and an intermediate portion, said upper tube and said lower tube being telescopingly moveable with respect to one another;

an upper control assembly positioned at said top portion of said upper tube;

a damping cartridge positioned at least partly within said lower tube, said damping cartridge defining an upper portion, a bottom portion and an intermediate portion, at least a section of said lower tube surrounding said cartridge defining a reservoir;

a shaft extending from said top portion of said upper tube into said damping cartridge;

a main damping piston connected to said shaft and positioned in said cartridge, at least said bottom portion of said cartridge defining a lower internal chamber located below said piston, said piston, said shaft and said control assembly cooperating to define a flow channel from said chamber through said shaft and said control assembly to said reservoir, wherein said upper control assembly further comprises a lock-out valve which selectively prevents the flow of fluid from said shaft through said assembly and to said reservoir.

64. A vehicle front fork, comprising:

an upper tube having a top portion, a bottom portion and an intermediate portion;

a lower tube having a top portion, a bottom portion and an intermediate portion, said upper tube and said lower tube being telescopingly moveable with respect to one another;

an upper control assembly positioned at said top portion of said upper tube;

a damping cartridge positioned at least partly within said lower tube, said damping cartridge defining an upper portion, a bottom portion and an intermediate portion, at least a section of said lower tube surrounding said cartridge defining a reservoir;

a shaft extending from said top portion of said upper tube into said damping cartridge;

a main damping piston connected to said shaft and positioned in said cartridge, at least said bottom portion of said cartridge defining a lower internal chamber located below said piston, said piston, said shaft and said control assembly cooperating to define a flow channel from said chamber through said shaft and said control assembly to said reservoir, further comprising a blow off valve positioned at said bottom portion of said cartridge to permit flow through said blow off valve and into said reservoir in response to a threshold blow off pressure.

* * * * *