US 20120080279A1

(19) United States

(12) Patent Application Publication

GALASSO et al.

(10) Pub. No.: US 2012/0080279 A1

(43) Pub. Date: Apr. 5, 2012

(54) **METHODS AND APPARATUS FOR SAG ADJUSTMENT**

(75) Inventors: **Mario GALASSO**, Watsonville, CA (US); **Bryan Wesley ANDERSON**, Watsonville, CA (US); **Dennis K. WOOTTEN**, Scotts Valley, CA (US)

(73) Assignee: **Fox Factory, Inc.**, Watsonville, CA (US)

(21) Appl. No.: **13/292,949**

(22) Filed: **Nov. 9, 2011**

Related U.S. Application Data

(63) Continuation-in-part of application No. 13/022,346, filed on Feb. 7, 2011, which is a continuation-in-part of application No. 12/773,671, filed on May 4, 2010, which is a continuation-in-part of application No. 12/727,915, filed on Mar. 19, 2010.

(60) Provisional application No. 61/411,901, filed on Nov. 9, 2010, provisional application No. 61/427,438, filed on Dec. 27, 2010, provisional application No. 61/533,712, filed on Sep. 12, 2011, provisional application No. 61/302,070, filed on Feb. 5, 2010, provisional application No. 61/175,422, filed on May 4, 2009, provisional application No. 61/161,552, filed on Mar. 19, 2009, provisional application No. 61/161,620, filed on Mar. 19, 2009.

Publication Classification

(51) **Int. Cl.**
F16F 9/24 (2006.01)

(52) **U.S. Cl.** **188/297**

(57) **ABSTRACT**

A method and apparatus for adjusting the sag setting of a vehicle suspension are disclosed. An integrated damper/gas spring shock absorber includes a bleed port located at a position on a gas spring cylinder corresponding to a desired sag setting. The gas spring may be over pressurized to a pressure above the expected operating pressure of the gas spring. The vehicle may then be loaded with the normal operating load, partially compressing the shock absorber. Opening the bleed port allows gas to vent from the gas spring, further compressing the shock absorber until a piston in the gas spring closes the bleed port from the inner surface of the gas spring cylinder. A sleeve may be inserted over the gas spring cylinder, the sleeve including one or more sealing elements that seal the bleed port from the outer surface of the gas spring cylinder during normal operation.

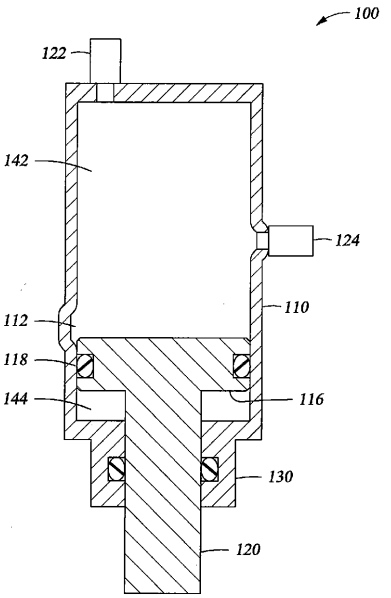

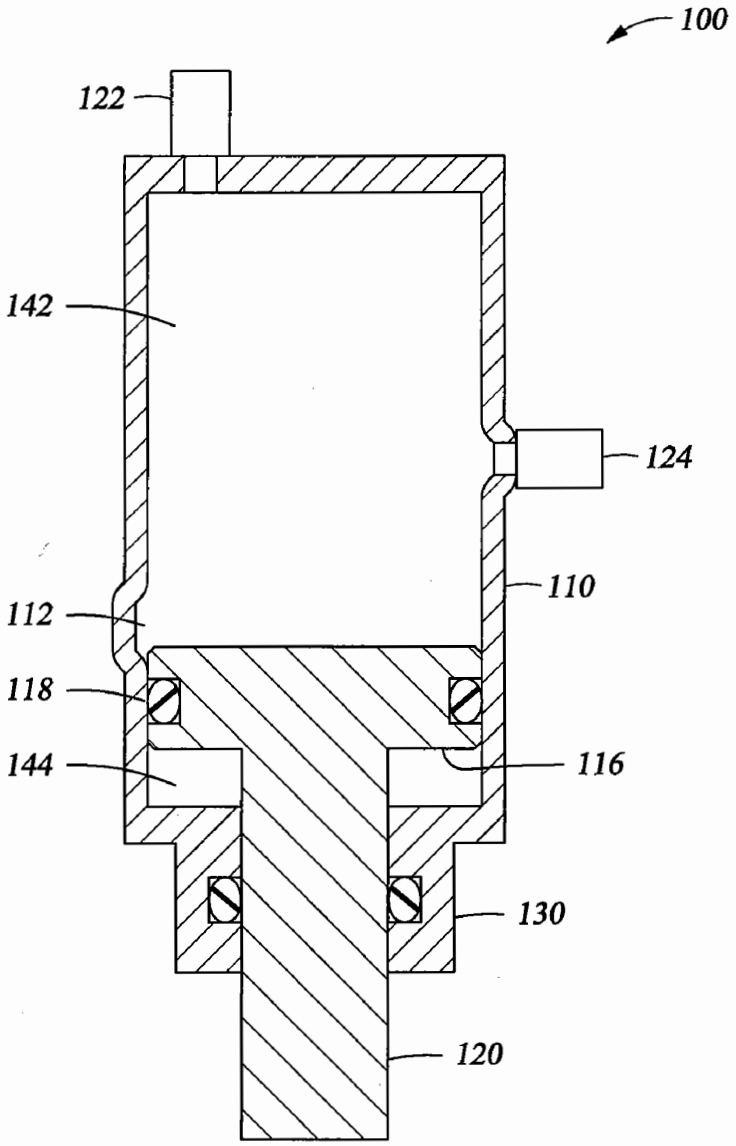

Fig. 1

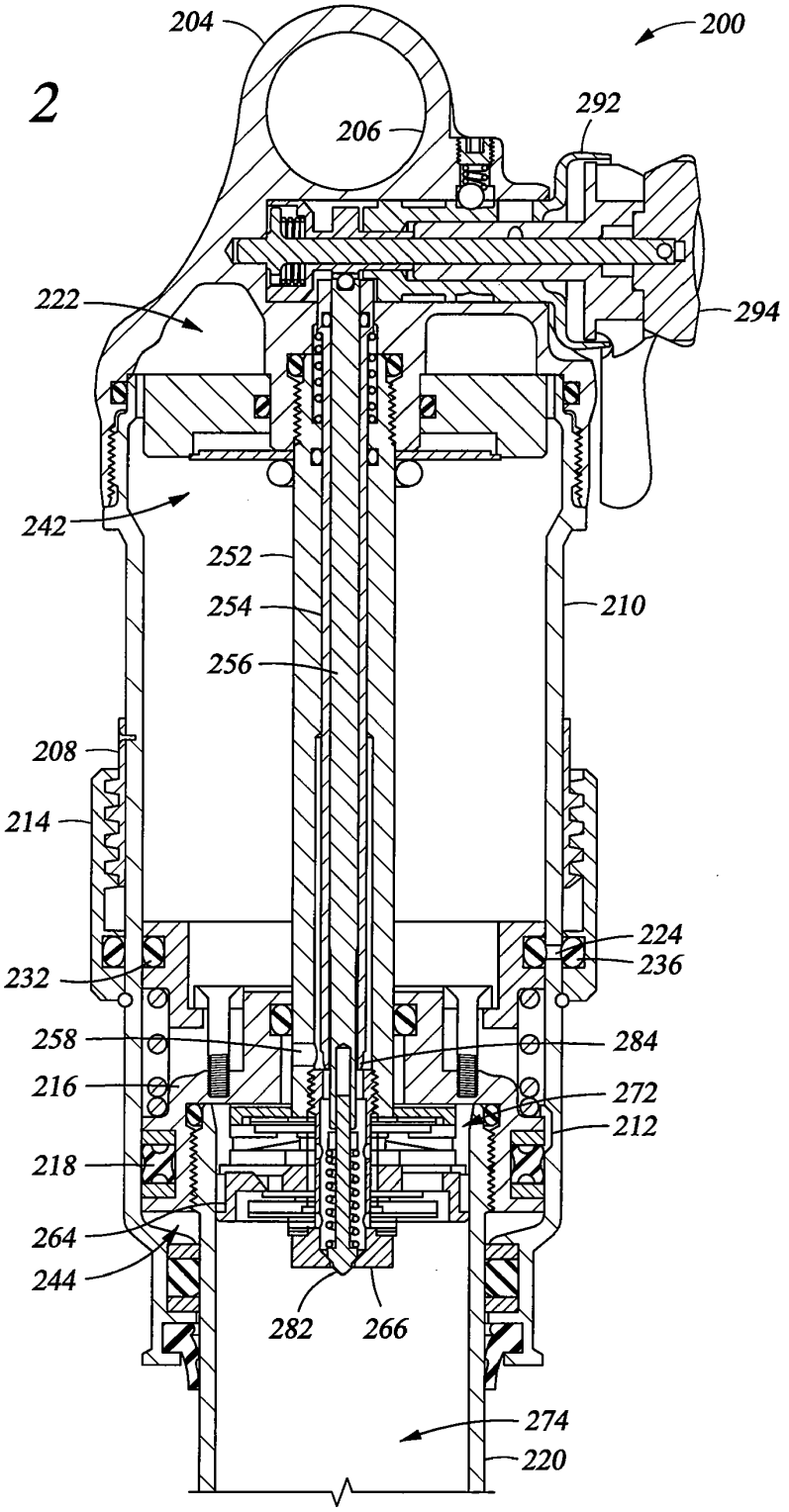
Fig. 2
200
204
206
292
294
222
242
252
254
256
210
208
214
224
236
232
258
284
216
272
212
218
264
244
282
266
274
220

Fig. 3

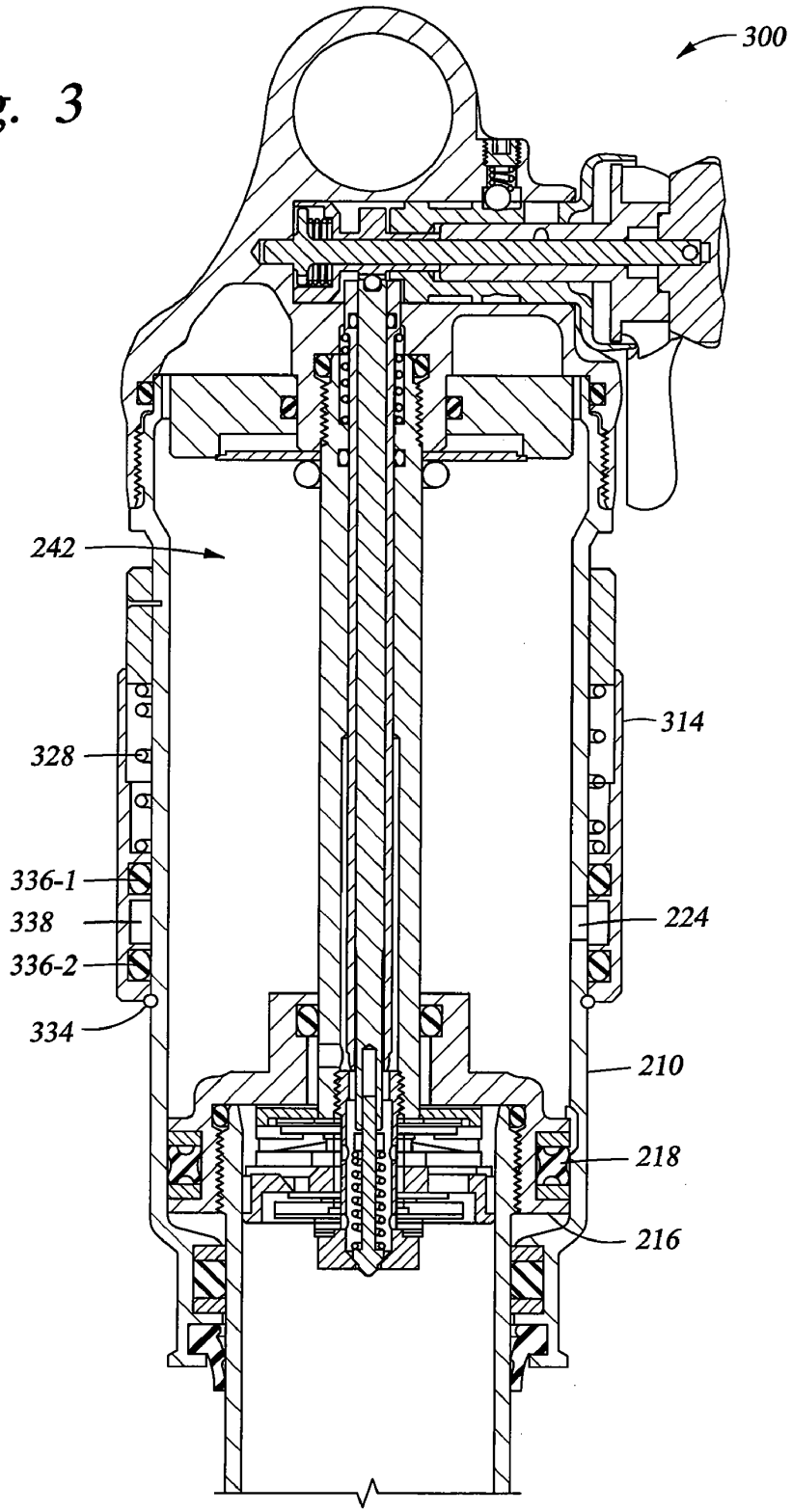

Fig. 4

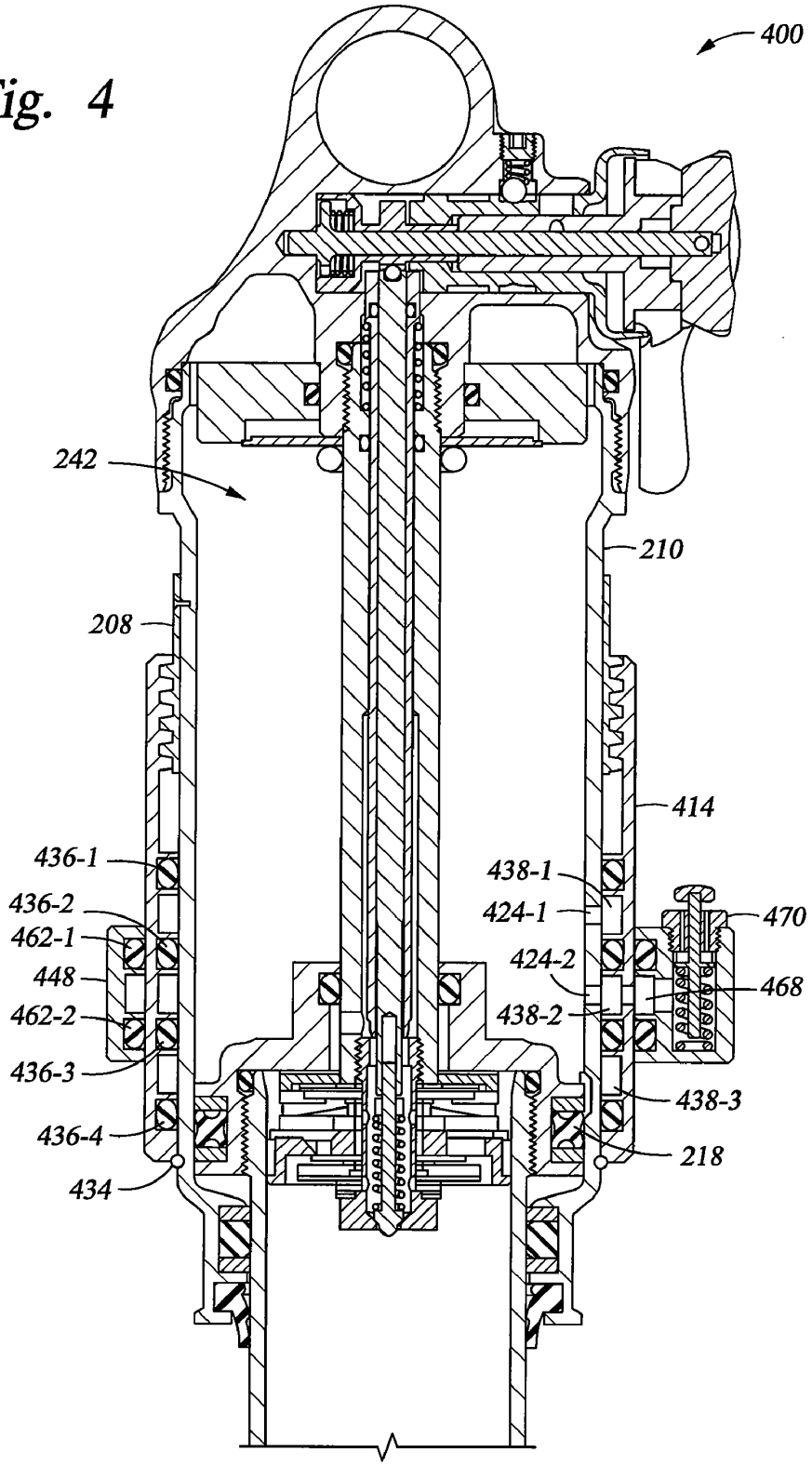
400
242
210
208
414
436-1
438-1
436-2
424-1
470
462-1
424-2
448
468
462-2
438-2
436-3
438-3
436-4
218
434

Fig. 5

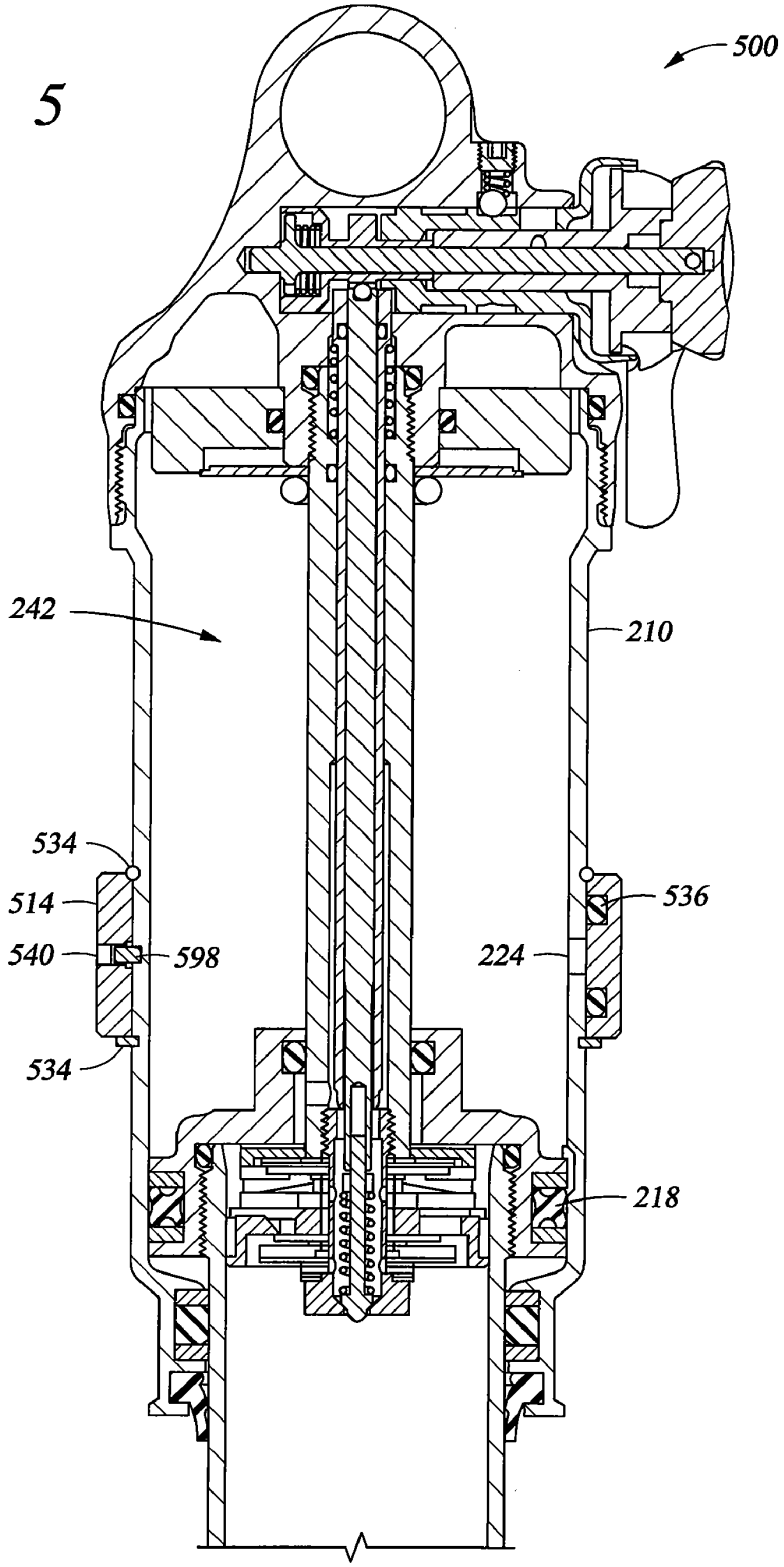

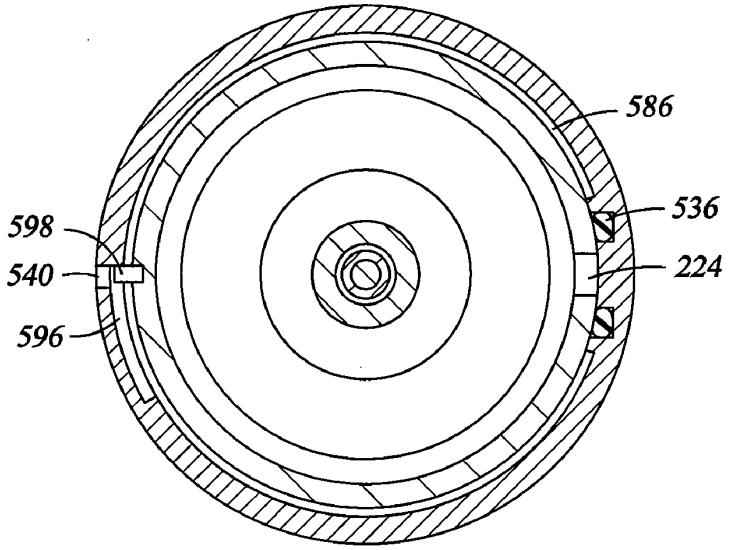

Fig. 6

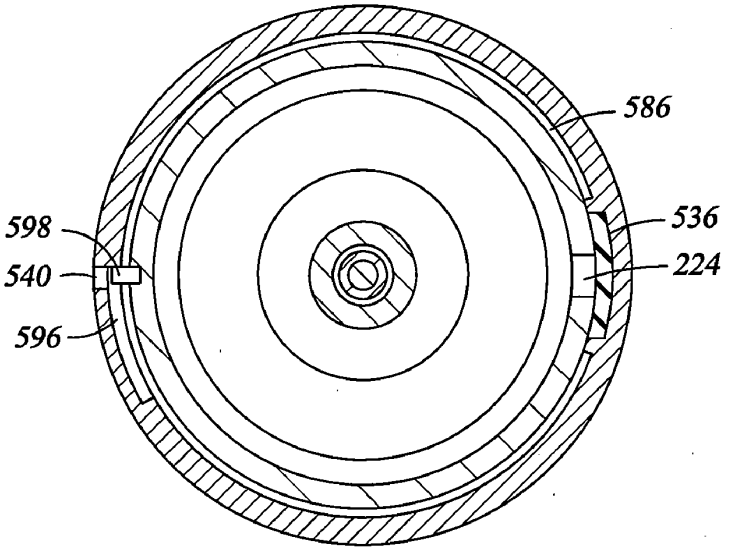

Fig. 7

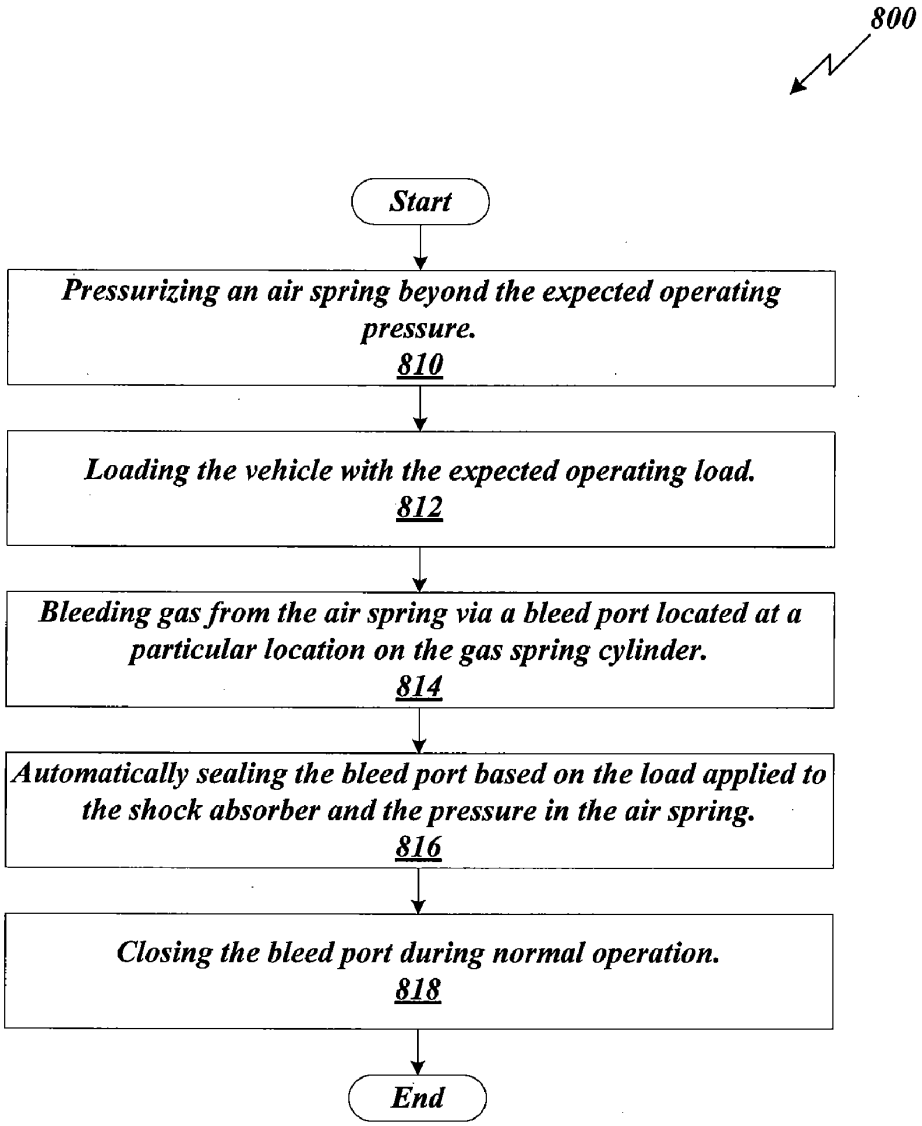
800
Start
Pressurizing an air spring beyond the expected operating pressure.
810
Loading the vehicle with the expected operating load.
812
Bleeding gas from the air spring via a bleed port located at a particular location on the gas spring cylinder.
814
Automatically sealing the bleed port based on the load applied to the shock absorber and the pressure in the air spring.
816
Closing the bleed port during normal operation.
818
End

Fig. 8

METHODS AND APPARATUS FOR SAG ADJUSTMENT

CROSS-REFERENCE TO RELATED APPLICATIONS

[0001] This application claims benefit of U.S. Provisional Patent Application Ser. No. 61/411,901 (Atty. Dkt. No. FOXF/0052USL), filed Nov. 9, 2010, U.S. Provisional Patent Application Ser. No. 61/427,438 (Atty. Dkt. No. FOXF/0053USL), filed Dec. 27, 2010, and U.S. Provisional Patent Application Ser. No. 61/533,712 (Atty. Dkt. No. FOXF/0058USL), filed Sep. 12, 2011, and is a Continuation-In-Part of U.S. patent application Ser. No. 13/022,346 (Atty. Dkt. No. FOXF/0045USP1), filed Feb. 7, 2011, which claims benefit of U.S. Provisional Patent Application Ser. No. 61/302,070 (Atty. Dkt. No. FOXF/0045USL), filed Feb. 5, 2010, and is a Continuation-In-Part of U.S. patent application Ser. No. 12/773,671 (Atty. Dkt. No. FOXF/0036US), filed May 4, 2010, which claims the benefit of U.S. Provisional Application Ser. No. 61/175,422 (Atty. Dkt. No. FOXF/0036USL), filed May 4, 2009, and is also a Continuation-In-Part of U.S. patent application Ser. No. 12/727,915 (Atty. Dkt. No. FOXF/0035US), filed Mar. 19, 2010, which claims benefit of U.S. Provisional Patent Application Ser. No. 61/161,552 (Atty. Dkt. No. FOXF/0035USL), filed Mar. 19, 2009, and U.S. Provisional Patent Application Ser. No. 61/161,620 (Atty. Dkt. No. FOXF/0035USL02), filed Mar. 19, 2009. Each of the aforementioned related patent applications is herein incorporated by reference in its entirety.

BACKGROUND OF THE INVENTION

[0002] 1. Field of the Invention

[0003] The invention relates generally to vehicle suspensions and, more specifically, to methods and apparatus for sag adjustment.

[0004] 2. Description of the Related Art

[0005] Vehicle suspension systems typically include some form of a shock absorber. Many integrated damper/spring shock absorbers include a damper body surrounded by a mechanical spring. The damper body often consists of a vented piston and a shaft telescopically mounted in a fluid cylinder. Some shock absorbers utilize gas as a spring medium in place of, or in addition to, a mechanical spring. The spring rate of such shock absorbers may be adjustable such as by adjusting the preload of a mechanical spring or adjusting the pressure of the gas in the shock absorber. In that way the shock absorber can be adjusted to accommodate heavier or lighter carried weight, or greater or lesser anticipated impact loads. In some instances the spring (gas or mechanical) may comprise different stages having varying spring rates thereby giving the overall shock absorber a compound spring rate depending variably throughout the stroke length. In vehicle applications, including motorcycles, bicycles, and, particularly, off-road applications, shock absorbers are pre-adjusted to account for varying terrain and anticipated speeds and jumps. Shocks are also adjusted according to certain rider preferences (e.g. soft-firm).

[0006] One disadvantage with conventional shock absorbers is that adjusting the spring mechanism to the correct preset may be difficult. The vehicle must be properly loaded for the expected riding conditions such as by sitting on the vehicle while the spring mechanism is adjusted to create a proper amount of preload. Due to the setup of conventional systems, many times such adjustment requires both a rider sitting on the vehicle and a separate mechanic performing the proper adjustment at the location of the shock absorber. A further disadvantage is that many current systems rely on imprecise tools to set the initial amount of preload. For example, a mechanic may measure the compression of the shock with a ruler while simultaneously pressurizing the gas spring mechanism. Such techniques are imprecise and complicated to properly perform.

[0007] As the foregoing illustrates, what is needed in the art are improved techniques for easily adjusting the amount of preload applied to a spring in a shock absorber.

SUMMARY OF THE INVENTION

[0008] One embodiment of the present disclosure sets forth a shock absorber that includes a gas spring cylinder containing a piston. The piston is moveable between an extended position and a compressed position within the gas spring cylinder. A fill port is fluidly coupled to a gas of the cylinder and configured to enable gas to be added to the cylinder, and, in addition, a bleed port fluidly coupled to the cylinder at a first position corresponding to a first sag setting of the shock absorber. Another embodiment of the present disclosure sets forth a vehicle suspension system that includes the shock absorber discussed above. The vehicle suspension system may also include a front fork incorporating the described elements of the shock absorber.

[0009] Yet another embodiment of the present disclosure sets forth a method for adjusting a vehicle suspension. The method includes the steps of pressurizing a gas spring cylinder of a shock absorber, loading the vehicle suspension with an expected operating load, bleeding air from the cylinder through a bleed port/valve until a sealing element attached to a piston automatically closes the bleed valve, and closing the bleed valve to prevent further air from bleeding from the cylinder during normal operation.

[0010] One advantage of some disclosed embodiments is that a rider may easily and automatically adjust the preload of a shock absorber without assistance from another individual. The rider simply opens the bleed port/valve until gas no longer bleeds from the air spring.

BRIEF DESCRIPTION OF THE DRAWINGS

[0011] FIG. **1** is a schematic illustration of a gas spring shock absorber, according to one example embodiment;

[0012] FIG. **2** is a sectional side elevation view of a gas spring shock absorber, according to one example embodiment;

[0013] FIG. **3** is a sectional side elevation view of a gas spring shock absorber, according to another example embodiment;

[0014] FIG. **4** is a sectional side elevation view of a gas spring shock absorber, according to yet another example embodiment;

[0015] FIG. **5** is a sectional side elevation view of a gas spring shock absorber, according to still other example embodiments;

[0016] FIGS. **6** and **7** illustrate sectional plan views of various embodiments of the rotary sleeve of FIG. **5**; and

[0017] FIG. **8** sets forth a flowchart of a method for adjusting a vehicle suspension that includes a gas spring shock absorber, according to one example embodiment.

DETAILED DESCRIPTION

[0018] Integrated damper/spring vehicle shock absorbers often include a damper body surrounded by a mechanical spring or constructed in conjunction with an air spring. The damper often consists of a piston and shaft telescopically mounted in a fluid filled cylinder. A mechanical spring may be a helically wound spring that surrounds the damper body. Various integrated shock absorber configurations are described in U.S. Pat. Nos. 5,044,614; 5,803,443; 5,553,836; and 7,293,764; each of which is herein incorporated, in its entirety, by reference.

[0019] When adjusting the suspension of a vehicle, an important initial setting to get correct is suspension "sag." The amount of sag is the measured distance a shock absorber compresses while the rider, wearing intended riding gear, is seated on (for example) a bicycle or motorcycle in a riding position, relative to the shock absorber's fully extended position (sag also applies to ATVs, trucks and other suspension equipped vehicles). Getting the sag correct sets the front end steering/handling geometry, puts the rear suspension at its intended linkage articulation for pedaling efficiency (if applicable) and bump absorption and provides some initial suspension compression to allow the wheels/suspension to react to negative terrain features (e.g. dips requiring suspension extension) without having the entire vehicle "fall" into those features. Often any attention that is paid to this initial sag setting is focused on the rear suspension, especially in motorcycle applications, but making sure that both the front and rear sag settings are correct are equally important. In one embodiment, each suspension component is equipped with a position sensor (e.g. electronic or mechanical) for indicating the magnitude (or state) of extension or compression existing in the suspension.

[0020] It is noted that embodiments herein of shock absorbers and related systems are equally applicable to the front forks of various vehicles, such as bicycles. In such front forks, components related to the gas spring may be included in a first telescopic tube of the front fork and components related to the damper may be included in a second telescopic tube of the front fork. The first and second telescopic tubes may be coupled via a yoke attached to the steering mechanism. Further, it is contemplated that a vehicle may include both a shock absorber and a front fork, both of which have some or all of the features disclosed herein. For example, a motorcycle may include a front fork coupled to the handlebars of the motorcycle at an upper end of the front fork and coupled to the front axle at the lower end of the front fork. Similarly, that same motorcycle may also include a shock absorber coupled to the main frame of the motorcycle at a first end of the shock absorber and coupled to the rear swingarm at the second end of the shock absorber.

[0021] FIG. **1** is a schematic illustration of a gas spring shock absorber **100**, according to one example embodiment. As shown in FIG. **1**, the gas spring shock absorber **100** includes a gas cylinder **110** and a piston rod **120** connected to a piston **116** that is telescopically housed within the gas cylinder **110**. The piston rod **120** passes through a sealed head **130** of the shock absorber **100**. The piston **116** reciprocates in the cylinder body and is sealed against an inner surface of the cylinder body via a sealing element **118** (e.g., an o-ring) preventing gas from a positive air spring **142** from flowing into a negative air spring **144**. As the piston rod **120** is forced into the gas spring shock absorber **100**, the piston **116** moves into the gas cylinder **110** and compresses the gas in the positive air spring **142** thereby resisting the motion of the piston rod **120** as the volume of the positive air spring **142** decreases. Similarly, as the piston rod **120** is extracted from the gas cylinder **110**, the piston **116** moves towards the sealed head **130** of the gas cylinder **110** and compresses the negative air spring **144** resisting motion of the piston rod **120** as the shock absorber **100** approaches the fully extended position.

[0022] In one embodiment, the shock absorber **100** is connected to a rear linkage of a bicycle. In order to charge the positive air spring **142**, gas is pumped into the gas cylinder **110** via a fill valve **122**. Fill valve **122** comprises a Schrader type valve such as commonly used with bicycle tubes. In alternative embodiments, fill valve **122** may be some other pneumatic type valve well-known to those of skill in the art. Gas is continually added (e.g., by means of a pump or air compressor) to the gas cylinder **110** via fill valve **122** such that the pressure within the positive air spring **142** increases and forces the piston **116** towards the sealed head **130** of the shock absorber **100**. Gas is added until the pressure in the positive air spring **142** reaches a max pressure P_1 (e.g., 300 psi) that is beyond a reasonably anticipated operating pressure but still below any structural pressure limitations of the gas cylinder **110**. Fill valve **122** may then be closed, sealing the gas inside the gas cylinder **110**. Gas cylinder **110** also includes a bypass channel **112** located a fixed distance D_B from the sealed head **130** of the shock absorber **100**. Bypass channel may be a dimple in the side of gas cylinder **110** configured such that when piston **116** is located at the distance D_B within the stroke, gas from the positive air spring **142** may flow freely to the negative air spring **144**, thereby equalizing the pressure on both sides of piston **116**. As piston **116** moves below the bypass channel **112**, the pressure in the negative air spring **144** will be greater than the pressure in the positive air spring **142**, applying a force on the piston **116** away from the sealed head **130** of the shock absorber **100**. Conversely, as piston **116** moves above the bypass channel **112**, the pressure in the negative, air spring **144** will be less than the pressure in the positive air spring **142**, applying a force on the piston **116** toward the sealed head **130** of the shock absorber **100**.

[0023] U.S. Pat. No. 6,135,434 ("'434 Patent") which is entirely incorporated herein by reference discloses (see FIGS. **3**, **4** and **5** and descriptions thereof) an integral air spring and damper type shock absorber including a negative gas spring and a bypass port or channel. As described in the '434 Patent, the axial location of the bypass channel is important in properly setting the negative air spring **144** pressure versus the positive air spring **142** pressure throughout the shock stroke.

[0024] In one embodiment, the initial suspension "sag" setting can be automatically set and facilitated by integrating a sag setting bleed valve **124** at a particular location in the gas cylinder **110** that is configured to allow a rider to bleed off air pressure within the positive air spring **142** until a specific sag level is achieved (based on the initial load placed on the shock absorber **100**). Each shock absorber would be configured with a specific, fixed sag position corresponding to the location of the sag setting bleed valve. In order to adjust the preload of the gas spring to a correct sag position, a load L_1, corresponding to at least a portion of the weight of a rider, is applied to the shock absorber **100** such that piston **116** is moved to a dis-

tance D_1 from the sealed head **130** of the shock absorber **100**. Distance D_1 corresponds to a point where the force on piston **116** based on the differential pressure between the positive air spring **142** and the negative air spring **144** is equal to the load L_1. At a position D_1 and pressure P_1, the shock absorber **100** is "stiff" and the setup of the shock absorber **100** may need adjustment to provide a comfortable ride for the vehicle. The sag setting bleed valve **124** may be opened to decrease the pressure in the positive air spring **142**. The sag setting bleed valve **124** is located at a distance D_2 (greater than D_1) from the sealed head **130** of the shock absorber **100**. As the pressure decreases from the max pressure P_1, the load L_1 forces the piston rod **120** into the gas cylinder **110** until the piston **116** is located at the distance D_2 such that the piston seal **118** blocks the inner surface of the port connected to the sag setting bleed valve **124** preventing any further gas from escaping from the positive air spring **142**. In one embodiment, the sag setting bleed valve **124** is of a similar type to fill valve **122** (i.e., a Schrader type pneumatic valve). In other embodiments, sag setting bleed valve **124** may be a port or an aperture that may be closed via the abutment of a seal over the aperture, various examples of which are described below in conjunction with FIGS. **2-7**.

[0025] In one embodiment, sag setting bleed valve **124** may be actuated directly by a rider such as by depressing the valve stem inside a Schrader type valve that is threaded into a port drilled through the wall of the gas cylinder **110**. In another embodiment, the sag setting bleed valve **124** may be actuated indirectly via a control mechanism remotely located on another part of the vehicle. For example, a button may be located on a handlebar of the vehicle or within the cab of the vehicle that, when pressed, actuates the sag setting bleed valve **124**. The control mechanism may actuate the sag setting bleed valve **124** via a cable based actuator (similar to common clutch or brake linkages on conventional motorcycles or bicycles), an electric actuator, or a pneumatic actuator. In yet another embodiment, the sag setting bleed valve may be pneumatically coupled to the port in the gas cylinder **110** via a hose and located remotely from the shock absorber **100**.

[0026] Using the sag setting bleed valve **124** to setup the vehicle suspension provides a single sag setting based on the location of the sag setting bleed valve **124** within the shock stroke. Alternatively, the fill valve **122** may be used to set an "infinite" number of sag positions by filling or bleeding gas into or out of the positive air spring **142** such that the steady state position of piston **116** is located at a distance D_S from the sealed head **130** of the shock absorber. However, when using the fill valve **122** to adjust the sag setting, the user must monitor the pressure of positive air spring **142** or the amount of compression of shock absorber **100**, such as with a pressure sensor or with a scale or ruler etched into the side of the piston rod **120**, in order to properly gauge the correct amount of sag for a given load.

[0027] FIG. **2** is a sectional side elevation view of a gas spring shock absorber **200**, according to one example embodiment. The shock absorber **200** in FIG. **2** is shown in an extended position and may be mounted to the rear linkage of a vehicle via eyelet **206**, which may include a bearing (not shown). Shock absorber **200** is an integrated damper/gas spring type shock absorber that includes a damping fluid cylinder **220** telescopically housed within a gas cylinder **210**. A shaft **252** connects a sealed, upper end of the gas cylinder **210** with a vented damping piston **264** movably mounted within the damping fluid cylinder **220**. The upper end of the gas cylinder **210** is sealed via an upper mounting element **204** that is threaded onto the outside of the gas cylinder **210**. Similar to shock absorber **100**, shock absorber **200** includes a positive air spring **242**, a negative air spring **244**, a piston **216**, and a fill port **222**. Damping fluid cylinder **220** is coupled to piston **216** on a sealed, upper end of the damping fluid cylinder **220** and movably mounted within the gas cylinder **210**. Piston **216** includes a sealing element **218** such as an o-ring that seals the outer edge of the piston against the inner surface of the gas cylinder **210**, thereby isolating gas in the positive air spring **242** from gas in the negative air spring **244**. Gas cylinder **210** also includes a bypass port **212** (or channel) that enables the pressure in positive air spring **242** to equalize with the pressure in negative air spring **244** when piston **216** is located proximate to the fully extended position.

[0028] The vented damping piston **264** is secured to one end of shaft **252** via a hollow bolt **266**. Vented damping piston **264** includes shim stacks that cover fluid paths through the vented damping piston **264**. As shock absorber **200** compresses or expands, vented damping piston **264** is forced to move relative to the damping fluid cylinder **220**. As the damping fluid cylinder **220** is forced up into the gas cylinder **210**, a differential pressure between the fluid (or gas) in fluid volume **272** (i.e., the volume of fluid between the vented damping piston **264** and the piston **216** within the damping fluid cylinder **220**) and the fluid in fluid volume **274** (i.e., the volume of fluid below the vented damping piston **264** within the damping fluid cylinder **220**) increases. As the differential pressure passes a first threshold value, a compression shim stack bends allowing fluid to flow from fluid volume **272** on one side of the vented damping piston **264** to fluid volume **274** on the other side of the vented damping piston. The size and configuration (i.e., the amount of preload) of the compression shim stack determines the first threshold value required to allow fluid to flow from fluid volume **272** to fluid volume **274**. Similarly, vented damping piston **264** also includes a rebound shim stack, which, during rebound (i.e., as damping fluid cylinder **220** is extracted from gas cylinder **210**) of the shock absorber **200**, allows fluid to flow from fluid volume **274** back into fluid volume **272** once the differential pressure reaches a second threshold value that is opposite in direction from the first threshold value (i.e., the pressure in fluid volume **274** exceeds the pressure in fluid volume **272**). The size and configuration of the rebound shim stack determines the second threshold value required to allow fluid to flow from fluid volume **274** to fluid volume **272**.

[0029] Shock absorber **200** also includes a blowoff valve **282** and a slow rebound valve **284**. Blowoff valve **282** is mounted inside hollow bolt **266**. An outer control arm **254** is telescopically mounted inside shaft **252** and controls the amount of fluid that flows through the slow rebound valve **284**, which may be adjusted by turning a first control knob **292** mounted externally to the upper mounting element **204**. Fluid may flow from fluid volume **274** through a bypass port **258** and through the slow rebound valve **284** to return to fluid volume **272**. This rebound fluid path allows a small amount of fluid to bypass the rebound shim stacks in vented damping piston **264** and return to fluid volume **272** as shock absorber **200** returns to an extended position. Similarly, an inner control arm **256** is telescopically mounted inside outer control arm **254** and controls the amount of preload applied to blowoff valve **282**, which may be adjusted by turning a second control knob **294** mounted externally to the upper mounting element **204**. The blowoff valve **282** and the slow rebound

valve **284** are adjusted via a cam mechanism that rides against the upper surface of inner control arm **256** and outer control arm **254**, respectively. The cam mechanisms are located proximate to the upper end of shaft **252**. In alternative embodiments, vented damping piston **264** may be replaced by other technically feasible motion damping elements well-known to those of skill in the art.

[0030] Shock absorber **200** also includes a topout shutoff seal **232** that, when piston **216** is in the fully extended position, prevents gas in the positive air spring **242** from leaking out of the sag setting bleed port **224**. As shown in FIG. **2**, an O-ring or other type of seal is positioned such that, in the fully extended position, the O-ring abuts the sag setting bleed port **224**, sealing the inner surface of the sag setting bleed port **224** from the inside of the gas cylinder **210**. Although not explicitly shown, gas may be pumped into the fill port **222** via a Schrader type valve or other pneumatic valve that is fluidly coupled to fill port **222** through an external surface of the upper mounting element **204**.

[0031] The gas spring shock absorber **200** of FIG. **2** is configured to enable automatic sag adjustment by a rider using the rotary sleeve **214** threaded onto course threads **208** located on the external surface of gas cylinder **210**. The rotary sleeve **214** includes a sealing element **236**, such as an o-ring, that abuts sag setting bleed port **224**, sealing the outer surface of sag setting bleed port **224**, when the rotary sleeve **214** is located in a first position. In order to automatically adjust the amount of sag of a vehicle suspension, the positive air spring **242** of shock absorber **200** is over pressurized to a pressure below the maximum structural pressure limit of shock absorber **200** but above the expected operating pressure of shock absorber **200**. Then, the rider loads the vehicle suspension with the normal operating load (e.g., by sitting on the vehicle), which partially compresses shock absorber **200** and moves topout shutoff seal **232** away from the inner surface of the sag setting bleed port **224**. At this point, the rider may rotate the rotary sleeve such that the course thread **208** forces the sealing member **236** to move away from the outer surface of the sag setting bleed port **224**. Air will bleed from the positive air spring **242** via the sag setting bleed port **224** until the load on shock absorber **200** from the weight of the rider forces piston **216** to move to a position where sealing element **218** abuts the inner surface of the sag setting bleed port **224**. Typical sag settings may correspond to shock absorber compression of 25% (i.e., distance D_2 is equal to ¼ of the stroke length where D is equal to 0 when shock absorber **200** is in the fully extended position). Because the sag setting bleed port **224** and the bypass port **212** perform different functions it may be useful in some embodiments to ensure that their functional (i.e. position in the shock stroke) locations are separate and distinct (i.e., $D_B \neq D_2$). In one embodiment, sag setting bleed port **224** is located at a position (D_2) on gas spring cylinder **210** that is equal to approximately 25% of the stroke length of shock absorber **200**. In other embodiments, sag setting bleed port **224** is located at a position (D_2) on gas spring cylinder **210** that is within a range between, for example, 0% and 50% of the stroke length. It will be appreciated that the position of the sag setting bleed port **224** determines the amount of sag for the shock absorber **200** and that changing the position of the sag setting bleed port **224** relative to the position of the piston **216** at different points in the stroke length will result in different amounts of sag and a different feel for the rider (e.g., a stiff ride or a soft ride).

[0032] FIG. **3** is a sectional side elevation view of a gas spring shock absorber **300**, according to another example embodiment. Gas spring shock absorber **300** is similar to gas spring shock absorber **200** of FIG. **2**. The topout shutoff seal **232** is not shown in FIG. **3** and may be omitted in some embodiments. If topout shutoff seal **232** is not included within the shock absorber, then gas will bleed from positive air spring **242** whenever the sag setting bleed port **224** is opened. As shown in FIG. **3**, the rotary sleeve **214** of shock absorber **200** is replaced with a spring loaded sleeve **314**.

[0033] Spring loaded sleeve **314** is telescopically mounted around gas cylinder **210**. Spring loaded sleeve **314** is biased to close over the sag setting bleed port **224** in a first position via spring **328**, and is retained on the gas cylinder **210** via a retaining ring **334**. The spring loaded sleeve **314**, when abutting the retaining ring **334**, seals the sag setting bleed port **224** via a first sealing element **336-1** and a second sealing element **336-2** that form a sealed cavity **338** between the inner surface of the spring loaded sleeve **314** and the gas cylinder **210**.

[0034] In shock absorber **200** of FIG. **2**, the rotary sleeve **214** seals the sag setting bleed port **224** by positioning a sealing element **236** directly over an outer surface of the sag setting bleed port **224**. In contrast, the spring loaded sleeve **314** of FIG. **3** seals the sag setting bleed port **224** via two distinct sealing elements, a first sealing element **336-1** located above the sag setting bleed port **224** and a second sealing element **336-2** located below the sag setting bleed port **224**. Although, a sealing element does not directly close the outer surface of the sag setting bleed port **224**, the structure of the spring loaded sleeve **314** creates a sealed cavity **338** between the first sealing element and second sealing elements that performs the same function. It will be appreciated that, in various embodiments, the sealing implementation of the rotary sleeve **214** of FIG. **2** (i.e., a single sealing element that directly abuts the outer surface of the sag setting bleed port **224**) may be implemented within the spring loaded sleeve **314** of FIG. **3** in lieu of the two sealing element implementation shown in FIG. **3**, and, similarly, the two sealing element implementation may be implemented within the rotary sleeve **214** of FIG. **2**.

[0035] In order to automatically adjust the sag position using the spring loaded sleeve **314**, the positive air spring **242** is over pressurized to a point above the expected operating pressure of shock absorber **300** but below the maximum structural pressure limit of shock absorber **300**. Then, the rider will sit on the vehicle or otherwise load the vehicle with the normal operating load, which partially compresses shock absorber **300**. At this point, the rider may retract the spring loaded sleeve **314** such that the sag setting bleed port **224** is allowed to bleed gas from the positive air spring **242** further compressing shock absorber **300**. Air will bleed from the positive air spring **242** via the sag setting bleed port **224** until the load on shock absorber **300** from the weight of the rider forces piston **216** to move to a position where sealing element **218** abuts the sag setting bleed port **224**. The rider may then release the spring loaded sleeve **314** to seal the sag setting bleed port **224**.

[0036] FIG. **4** is a sectional side elevation view of a gas spring shock absorber **400**, according to yet another example embodiment. Gas spring shock absorber **400** is similar to gas spring shock absorbers **200** and **300** of FIGS. **2** and **3**, respectively. As shown in FIG. **4**, the rotary sleeve **214** of shock absorber **200** is replaced with a rotary sleeve **414** that is threaded onto course threads **208** on the external surface of

gas cylinder **210**. Unlike rotary sleeve **214**, rotary sleeve **414** includes four distinct sealing members **436-1**, **436-2**, **436-3**, and **436-4** (e.g., o-rings) that form three distinct, sealed cavities (**438-1**, **438-2**, and **438-3**) between the inner surface of the rotary sleeve **414** and the outer surface of gas cylinder **210**. Unlike shock absorber **200** and shock absorber **300**, shock absorber **400** includes both a first sag setting bleed port **424-1** and a second sag setting bleed port **424-2** that allow a user to select between two different amounts of sag in the suspension. The first sag setting bleed port **424-1** corresponds to a "softer" ride and results in a lower relative operating pressure within positive air spring **242** when compared to the operating pressure in positive air spring **242** using the second sag setting bleed port **424-2**. The second sag setting bleed port **424-2** corresponds to a "stiffer" ride and results in a higher relative operating pressure within positive air spring **242** when compared to the operating pressure in positive air spring **242** using the first sag setting bleed port **424-1**.

[0037] As shown in FIG. **4**, the rotary sleeve **414** is restrained in a first position by a retaining ring **434**. In the first position, the first cavity **438-1** is aligned with the first sag setting bleed port **424-1**, the second cavity **438-2** is aligned with the second sag setting bleed port **424-2**, and the third cavity **438-3** is not aligned with either the first sag setting bleed port **424-1** or the second sag setting bleed port **424-2**. A secondary rotary sleeve **448** is aligned coaxially over the rotary sleeve **414** and includes two sealing elements **462-1** and **462-2** that form a sealed cavity **468** that fluidly couples the second cavity **438-2** with a bleed valve **470** via one or more ports in rotary sleeve **414**. The bleed valve **470** (e.g., a Schrader type pneumatic valve) allows pressure in the positive air spring **242** to be bled from the shock absorber **400**.

[0038] In order to properly adjust the sag position for a "stiff" ride, a rider moves the rotary sleeve **414** to the first position such that the bleed valve is fluidly coupled to the second sag setting bleed port **424-2**. The shock absorber **400** is over pressurized and loaded with the normal operating load, which partially compresses shock absorber **400**. Then a user actuates the bleed valve **470** such that gas bleeds from the positive air spring **242** until the sealing element **218** abuts the inner surface of the second sag setting bleed port **424-2**. The user then closes the bleed valve **470** and the vehicle suspension is properly adjusted for a "stiff" ride.

[0039] In some situations, a user may prefer a "soft" ride setup for the vehicle suspension and may opt to use the first sag setting bleed port **424-1** instead of the second sag setting bleed port **424-2**. In such situations, the rotary sleeve **414** is moved to a second position (by rotating the rotary sleeve **414** such that the course threads **208** force the rotary sleeve **414** to move up the gas cylinder **210**) such that and the first cavity **438-1** is not aligned with either the first sag setting bleed port **424-1** or the second sag setting bleed port **424-2**, the second cavity **438-2** is aligned with the first sag setting bleed port **424-1**, and the third cavity **438-3** is aligned with the second sag setting bleed port **424-2**. In this manner, the first sag setting bleed port **424-1** is fluidly coupled with the bleed valve **470** and air may be bled from the positive air spring **242** until sealing element **218** abuts the first sag setting bleed port **424-1**. Relative to bleeding air using the second sag setting bleed port **424-2**, the spring rate of shock absorber **400** that results from setting the sag of the suspension via the first sag setting bleed port **424-1** will be lower.

[0040] The shock absorber **400** shown in FIG. **4** gives a rider more control over the feel of the suspension while still maintaining the ease of setup provided by implementing the sag setting bleed port **224** at a discrete location within the gas cylinder **210**. In such cases, a rider may easily adjust the vehicle according to the type of terrain the rider expects to encounter.

[0041] FIG. **5** is a sectional side elevation view of a gas spring shock absorber **500**, according to still other example embodiments. Again, gas spring shock absorber **500** is similar to gas spring shock absorbers **200**, **300**, and **400** of FIGS. **2**, **3**, and **4**, respectively. Shock absorber **500** includes a rotary sleeve **514** that, unlike rotary sleeves **214**, **314**, and **414**, is fixed relative to the stroke axis of shock absorber **500** (i.e., rotary sleeve **514** does not move telescopically with gas cylinder **210**). Instead, rotary sleeve **514** merely rotates around gas cylinder **210** such that the sag setting bleed port **224** is sealed or unsealed by sealing element **536**. Rotary sleeve **514** is retained on gas cylinder **210** via two retaining rings **534**.

[0042] As shown in FIG. **5**, rotary sleeve **514** includes a sealing element **536** that creates a seal between an inner surface of the rotary sleeve **514** and an outer surface of gas cylinder **210**. When rotary sleeve **514** is in a first position, the sealing element **536** seals the sag setting bleed port **224** to prevent air from bleeding from the positive air spring **242**. Rotary sleeve **514** also includes a keyway **596** (shown more clearly in FIGS. **6** and **7**) that, in conjunction with a key **598** press fit into gas cylinder **210**, prevents the rotary sleeve **514** from rotating more than a certain number of degrees in either direction around the stroke axis. From the first position, the rotary sleeve **514** may be rotated relative to the gas cylinder **210** to a second position such that the sealing element **536** is moved off of the outer surface of the sag setting bleed port **224**. In this manner, the sag setting bleed port **224** is fluidly coupled with one or more holes **540** in the rotary sleeve **514** that enable gas to bleed from the positive air spring **242** until sealing member **218** abuts the inner surface of the sag setting bleed port **224**.

[0043] FIGS. **6** and **7** illustrate sectional plan views of various embodiments of the rotary sleeve **514** of FIG. **5**. As shown in FIG. **6**, sealing element **536** is an o-ring type sealing element that contacts an outer surface of gas cylinder **210**, completely surrounding an outer surface of the sag setting bleed port **224**, as well as an inner surface of rotary sleeve **514**. As shown in FIG. **7**, sealing element **536** is a disc type sealing element that contacts an outer surface of gas cylinder **210**, completely covering the outer surface of the sag setting bleed port **224**, as well as an inner surface of rotary sleeve **514**.

[0044] Both of the embodiments illustrated in FIGS. **6** and **7** show a keyway **596** in the rotary sleeve **514**. The keyway **596** restricts the motion of rotary sleeve **514** such that rotary sleeve **514** may rotate X number of degrees around gas cylinder **210**. Hole **540** enables air to bleed from the positive air spring **242** into the environment. In FIGS. **6** and **7**, rotary sleeve **514** is configured in the first position, with the sealing element **536** abutting the outer surface of the sag setting bleed port **224**. As a rider rotates rotary sleeve **514** to a second position (where the key **598** is moved to the other end of the keyway **596**), the sealing element **536** is moved off of the sag setting bleed port **224** and the positive air spring is fluidly coupled with a channel **586** in the inner surface of the rotary sleeve **514** that provides a fluid path between the sag setting bleed port and the hole **540** in the rotary sleeve **514**. As shown, the hole **540** is located proximate to the keyway **596** allowing the key to be pressfit into gas cylinder **210** with the rotary

sleeve **514** in place. In alternative embodiments, two or more holes **540** may be spaced circumferentially around rotary sleeve **514** thereby coupling channel **586** to the atmosphere.

[0045] FIG. **8** sets forth a flowchart of a method **800** for adjusting a vehicle suspension that includes a gas spring shock absorber **100**, according to one example embodiment. Although the method steps are described in conjunction with the apparatus of FIGS. **1-7**, persons skilled in the art will understand that any apparatus configured to perform the method steps, in any order, is within the scope of the disclosure.

[0046] The method **800** begins at step **810**, where gas is added to the gas spring shock absorber **100** via fill valve **122**, forcing piston **116** and piston rod **120** to move toward the fully extended position of the shock absorber **100**. For example, positive air spring **142** may be pressurized to 300 psi, a pressure beyond the expected operating range of shock absorber **100**. At step **812**, the vehicle is loaded with the expected operating load. In one embodiment, a rider sits on the vehicle, which may be a bicycle or motorcycle. The weight of the rider, including any riding gear or other equipment, partially compresses shock absorber **100** until the increased pressure in air spring **142** offsets the expected operating load.

[0047] At step **814**, the sag setting bleed valve **124** is opened allowing gas to bleed from positive air spring **142**. As gas is bled from positive air spring **142**, piston **116** and piston rod **120** move into the gas cylinder **110**, thereby decreasing the volume of positive air spring **142** and maintaining a pressure within positive air spring **142** that offsets the load on the shock absorber **100**. It will be appreciated that in some embodiments, two or more separate sag setting bleed ports located at different positions of gas cylinder **110** corresponding to different relative sag settings. In such embodiments, the correct port must first be fluidly coupled to sag setting bleed valve **124** before air is bled from the positive air spring **142**. At step **816**, the motion of piston **116** eventually moves a sealing element **118** over an inner surface of the sag setting bleed valve **124**, stopping any additional air from bleeding from the positive air spring **142**. Then at step **818**, the bleed valve **124** may be closed to prevent air from bleeding from the positive air spring **142** during normal operation of the vehicle, and method **800** terminates.

[0048] In one embodiment, the initial sag position of the vehicle suspension can be automatically set and facilitated by having a bleed valve **124** within the shock absorber **100** bleed off air pressure until a specific sag level is achieved. Each particular shock absorber stroke length would correspond to a specific amount of sag/location of the bleed valve **124**. The user would pressurize their shock absorber **100** to a maximum shock pressure of, for example, 300 psi or so, to over pressurize the shock absorber **100** beyond any reasonable properly set sag pressure. The user may then manipulate the bleed valve **124** and sit on the vehicle. In one embodiment, the shock absorber **100** will bleed air from the positive air spring **142** until the bleed valve **124** encounters a shut off abutment which thereby shuts the bleed valve **124**. In another embodiment, the shock absorber **100**, having an axial position sensor and a controller to measure the axial position of the shock absorber from full extension (or any selected set "zero" position datum), "knows" it is extended beyond a proper sag level, and, in a sag set-up mode, an electrically actuated valve is opened to bleed air pressure from the positive air spring **142** in a controlled manner until the proper predetermined sag level is reached, at which point the valve automatically closes and the controller transitions out of the sag set-up mode. Alternatively, the user can switch the sag set up mode off upon reaching a proper sag setting. In another embodiment, with the controller in a normal ride mode, the vehicle is in a proper starting point for the sag level measurement. More pressure can be added to the air spring or pressure can be reduced from the air spring to accommodate different rider styles and or terrain. This auto sag feature can be achieved electronically as well, by having a position sensor in the shock, and a shock model data allowing the controller to adjust spring preload (e.g. air pressure) appropriately according to the given model. In other words, the controller will compare the shock model data to the measured motion of the shock absorber and adjust the air pressure as needed to match a target sag level. An electronically controlled pressure relief valve is utilized to bleed off air spring pressure until the sensor determines the shock absorber **100** is at its' proper sag. The pressure relief valve is then directed to close. In this manner, a proper amount of sag in the vehicle suspension is achieved.

[0049] The foregoing embodiments, while shown in configurations corresponding to rear bicycle shock absorbers, are equally applicable to bicycle or motorcycle front forks or other vehicle shock absorbers having or comprising air springs. While the foregoing is directed to embodiments of the present disclosure, other and further embodiments may be implemented without departing from the scope of the disclosure, the scope thereof being determined by the claims that follow.

1. A shock absorber comprising:

a gas spring cylinder containing a piston, the piston being moveable between an extended position and a compressed position within the gas spring cylinder;

a fill port fluidly coupled to a gas of the cylinder, the fill port being configured to enable gas to be added to the cylinder; and

a bleed port fluidly coupled to the cylinder at a first position, wherein the first position corresponds to a first sag setting of the shock absorber.

2. The shock absorber of claim **1**, wherein the first position corresponds to a point on the cylinder, measured from the extended position of the piston, substantially equal to 25 percent of the distance between the extended position of the piston and the compressed position of the piston.

3. The shock absorber of claim **1**, wherein the first position corresponds to a point on the cylinder, measured from the extended position of the piston, within the range of the extended position of the piston and approximately 50 percent of the distance between the extended position of the piston and the compressed position of the piston.

4. The shock absorber of claim **1**, further comprising a sleeve inserted over the cylinder and substantially coaxial therewith, the sleeve configured to close the bleed port in a first position and open the bleed port in a second position.

5. The shock absorber of claim **4**, wherein the sleeve is coupled to the cylinder via a course thread, the sleeve moveable from the first position to the second position by rotating the sleeve on the course thread.

6. The shock absorber of claim **4**, wherein the sleeve is retained on the cylinder via a retaining ring and spring biased towards the first position.

7. The shock absorber of claim **1**, further comprising a bleed valve fluidly coupled with the bleed port.

8. The shock absorber of claim **7**, wherein the bleed valve is a Schrader type pneumatic valve.

9. The shock absorber of claim **1**, further comprising a secondary bleed port fluidly coupled to the cylinder at a second position, wherein the second position corresponds to a second sag setting of the shock absorber that is different from the first sag setting.

10. The shock absorber of claim **9**, further comprising a sleeve inserted over the cylinder and substantially coaxial therewith, the sleeve configured to fluidly couple the bleed port to a bleed valve when the sleeve is in a first position and fluidly couple the secondary bleed port to the bleed valve when the sleeve is in a second position.

11. The shock absorber of claim **1**, further comprising a bypass channel formed in an inside surface of the cylinder at a second position, wherein the bypass channel is configured to enable the pressure of gas on both sides of the piston to equalize when the piston is located approximately in the second position within the cylinder.

12. The shock absorber of claim **1**, further comprising a damper that includes:

a damping cylinder having first and second ends; and

a movement damping element movably mounted within the damping cylinder,

wherein the second end of the damping cylinder is telescopically housed within the cylinder and is coupled to the piston.

13. A vehicle suspension system comprising a shock absorber that includes:

a gas spring cylinder containing a piston, the piston being moveable between an extended position and a compressed position within the gas spring cylinder; and

a bleed port fluidly coupled to the cylinder at a first position, wherein the first position corresponds to a first sag setting of the shock absorber.

14. The vehicle suspension system of claim **13**, further comprising a front fork having a first telescopic tube and a second telescopic tube, the first telescopic tube including a second gas spring cylinder, and a second bleed port, and the second telescopic tube including a damper.

15. The vehicle suspension system of claim **14**, wherein a first end of the shock absorber is coupled to a main frame of the vehicle and a second end of the shock absorber is coupled to a rear swingarm of the vehicle that is moveable relative to the main frame.

16. The vehicle suspension system of claim **13**, the shock absorber further comprising a sleeve inserted over the cylinder and substantially coaxial therewith, the sleeve configured to close the bleed port in a first position and open the bleed port in a second position, wherein the sleeve is coupled to the cylinder via a course thread and moveable from the first position to the second position by rotating the sleeve on the course thread.

17. The vehicle suspension system of claim **13**, the shock absorber further comprising a bleed valve fluidly coupled with the bleed port.

18. The vehicle suspension system of claim **17**, wherein the bleed valve is a Schrader type pneumatic valve.

19. The vehicle suspension system of claim **13**, the shock absorber further comprising a secondary bleed port fluidly coupled to the cylinder at a second position, wherein the second position corresponds to a second sag setting of the shock absorber that is different from the first sag setting.

20. The vehicle suspension system of claim **19**, the shock absorber further comprising a sleeve inserted over the cylinder and substantially coaxial therewith, the sleeve configured to fluidly couple the bleed port to a bleed valve when the sleeve is in a first position and fluidly couple the secondary bleed port to the bleed valve when the sleeve is in a second position.

21. The vehicle suspension system of claim **13**, the shock absorber further comprising a bypass channel formed in an inside surface of the gas spring cylinder at a second position, wherein the bypass channel is configured to enable the pressure of gas on both sides of the piston to equalize when the piston is located approximately in the second position within the cylinder.

22. The vehicle suspension system of claim **13**, the shock absorber further comprising a damper that includes:

a damping cylinder having first and second ends; and

a movement damping element movably mounted within the damping cylinder,

wherein the second end of the damping cylinder is telescopically housed within the cylinder and is coupled to the piston.

* * * * *