US010695151B2

(12) **United States Patent**
Esbech et al.

(10) **Patent No.: US 10,695,151 B2**
(45) **Date of Patent: *Jun. 30, 2020**

(54) **DETECTING TOOTH SHADE**

(71) Applicant: **3SHAPE A/S**, Copenhagen K (DK)

(72) Inventors: **Bo Esbech**, Gentofte (DK); **Rune Fisker**, Virum (DK); **Lars Henriksen**, Bagsværd (DK); **Tais Clausen**, Klagshamn (SE)

(73) Assignee: **3SHAPE A/S**, Copenhagen K (DK)

(*) Notice: Subject to any disclaimer, the term of this patent is extended or adjusted under 35 U.S.C. 154(b) by 168 days.

This patent is subject to a terminal disclaimer.

(21) Appl. No.: **15/888,764**

(22) Filed: **Feb. 5, 2018**

(65) **Prior Publication Data**

US 2018/0153664 A1 Jun. 7, 2018

Related U.S. Application Data

(63) Continuation of application No. 15/117,078, filed as application No. PCT/EP2015/052537 on Feb. 6, 2015, now Pat. No. 10,010,387.

(30) **Foreign Application Priority Data**

Feb. 7, 2014 (DK) 2014 70066

(51) **Int. Cl.**
A61C 13/08 (2006.01)
G01J 3/50 (2006.01)
(Continued)

(52) **U.S. Cl.**
CPC ***A61C 13/082*** (2013.01); ***G01J 3/504*** (2013.01); ***G01J 3/508*** (2013.01); *G16H 20/40* (2018.01); *G16H 50/50* (2018.01)

(58) **Field of Classification Search**
CPC G06T 17/00; G06T 15/04; G06K 2209/05; G06K 2209/40
(Continued)

(56) **References Cited**

U.S. PATENT DOCUMENTS

6,081,739 A 6/2000 Lemchen
6,334,773 B1 1/2002 Ahlen et al.
(Continued)

FOREIGN PATENT DOCUMENTS

EP 2 325 771 A2 5/2011
EP 2 799 032 A1 11/2014
(Continued)

OTHER PUBLICATIONS

International Search Report (PCT/ISA/210) dated May 11, 2015, by the European Patent Office as the International Searching Authority for International Application No. PCT/EP2015/052537.
(Continued)

Primary Examiner — Yosef Kassa
(74) *Attorney, Agent, or Firm* — Buchanan Ingersoll & Rooney P.C.

(57) **ABSTRACT**

Disclosed in a method, a user interface and a system for use in determining shade of a patient's tooth, wherein a digital 3D representation including shape data and texture data for the tooth is obtained. A tooth shade value for at least one point on the tooth is determined based on the texture data of the corresponding point of the digital 3D representation and on known texture values of one or more reference tooth shade values.

17 Claims, 9 Drawing Sheets

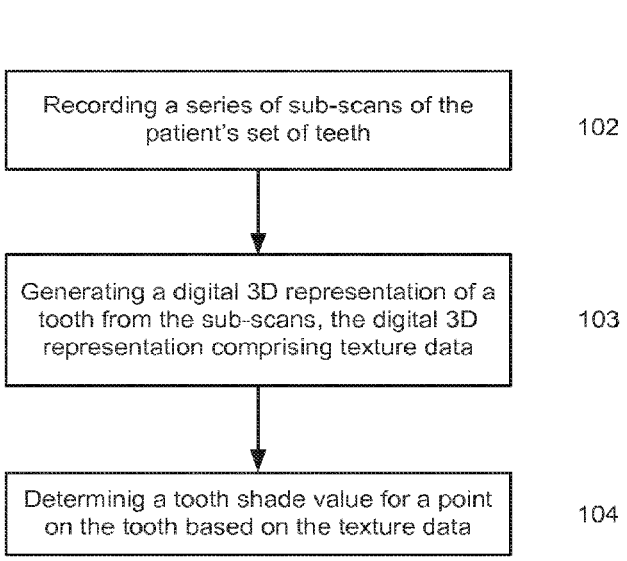

(51) **Int. Cl.**
G16H 50/50 (2018.01)
G16H 20/40 (2018.01)

(58) **Field of Classification Search**
USPC 382/128, 164, 165, 167, 209, 278, 282; 128/922, 823
See application file for complete search history.

(56) **References Cited**

U.S. PATENT DOCUMENTS

6,450,807 B1 * 9/2002 Chishti A61C 7/002 433/24
6,471,511 B1 * 10/2002 Chishti A61C 7/00
6,954,550 B2 * 10/2005 Fujieda G06T 7/0004 382/180
7,027,642 B2 4/2006 Rubbert et al.
7,134,874 B2 * 11/2006 Chishti A61C 7/00
7,296,996 B2 * 11/2007 Sachdeva A61C 7/00 433/24
7,355,721 B2 4/2008 Quadling et al.
7,636,455 B2 * 12/2009 Keaton G06K 9/0063 348/118
8,121,718 B2 2/2012 Rubbed et al.
8,144,954 B2 3/2012 Quadling et al.
8,180,100 B2 * 5/2012 Fujimaki G06T 7/593 382/100
8,331,653 B2 * 12/2012 Seki G06T 7/74 382/103
8,532,355 B2 * 9/2013 Quadling G06T 15/04 382/128
8,570,530 B2 * 10/2013 Liang A61B 1/00009 356/601
2001/0030748 A1 10/2001 Jung et al.
2003/0156283 A1 8/2003 Jung et al.
2006/0127852 A1 6/2006 Wen
2007/0212667 A1 9/2007 Jung et al.
2009/0133260 A1 5/2009 Durbin et al.
2009/0233253 A1 9/2009 Mrazek
2011/0125304 A1 5/2011 Schneider et al.
2013/0218530 A1 8/2013 Deichmann et al.
2013/0218531 A1 8/2013 Deichmann et al.
2014/0377718 A1 12/2014 Korten et al.
2015/0054922 A1 2/2015 Fisker et al.
2016/0022389 A1 1/2016 Esbech et al.
2016/0067018 A1 3/2016 Korten et al.

FOREIGN PATENT DOCUMENTS

WO WO 2003/073457 A2 9/2003
WO WO 2006/065955 A2 6/2006
WO WO 2010/145669 A1 12/2010
WO WO 2012/000511 A1 1/2012
WO WO 2012/007003 A1 1/2012
WO WO 2013/122662 A1 8/2013
WO WO 2014/125037 A1 8/2014

OTHER PUBLICATIONS

Written Opinion (PCT/ISA/237) dated May 11, 2015, by the European Patent Office as the International Searching Authority for International Application No. PCT/EP2015/052537.
IEEE Xplore Search Results (4 pages), accessed Mar. 2, 2018; this document was made of record by the Examiner on Mar. 13, 2018, in the parent application (U.S. App. No. 15/117,078).

* cited by examiner

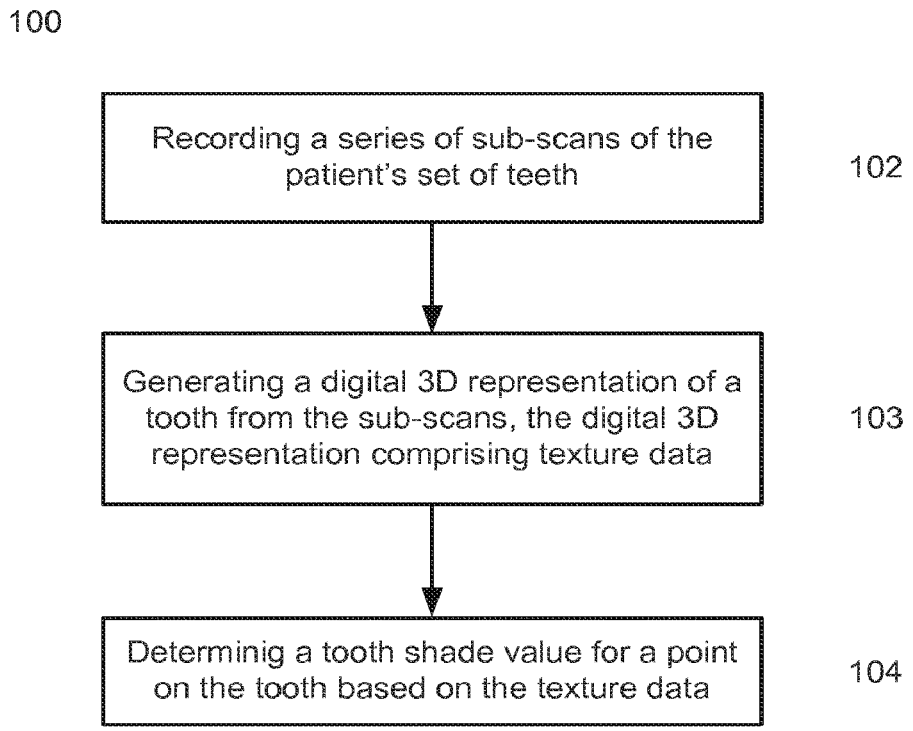
100
Recording a series of sub-scans of the patient's set of teeth
102
Generating a digital 3D representation of a tooth from the sub-scans, the digital 3D representation comprising texture data
103
Determinig a tooth shade value for a point on the tooth based on the texture data
104

Fig. 1

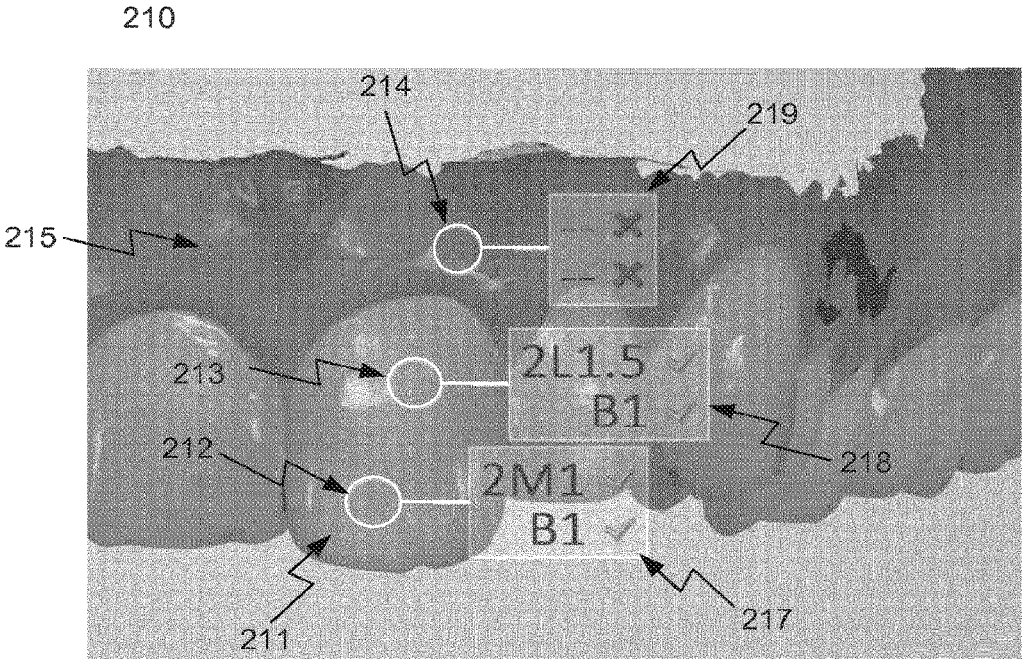
210
214
219
215
213
2L1.5
B1
218
212
2M1
B1
211
217

Fig. 2

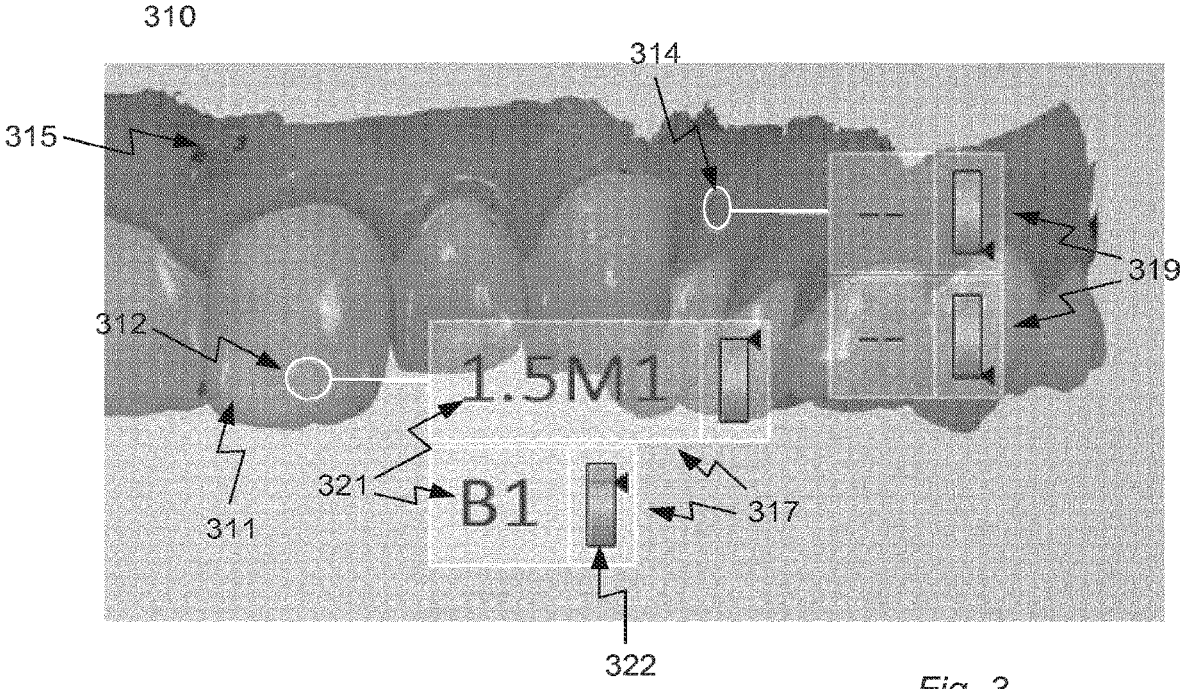
310
314
315
319
312
1.5M1
321
B1
317
311
322

Fig. 3

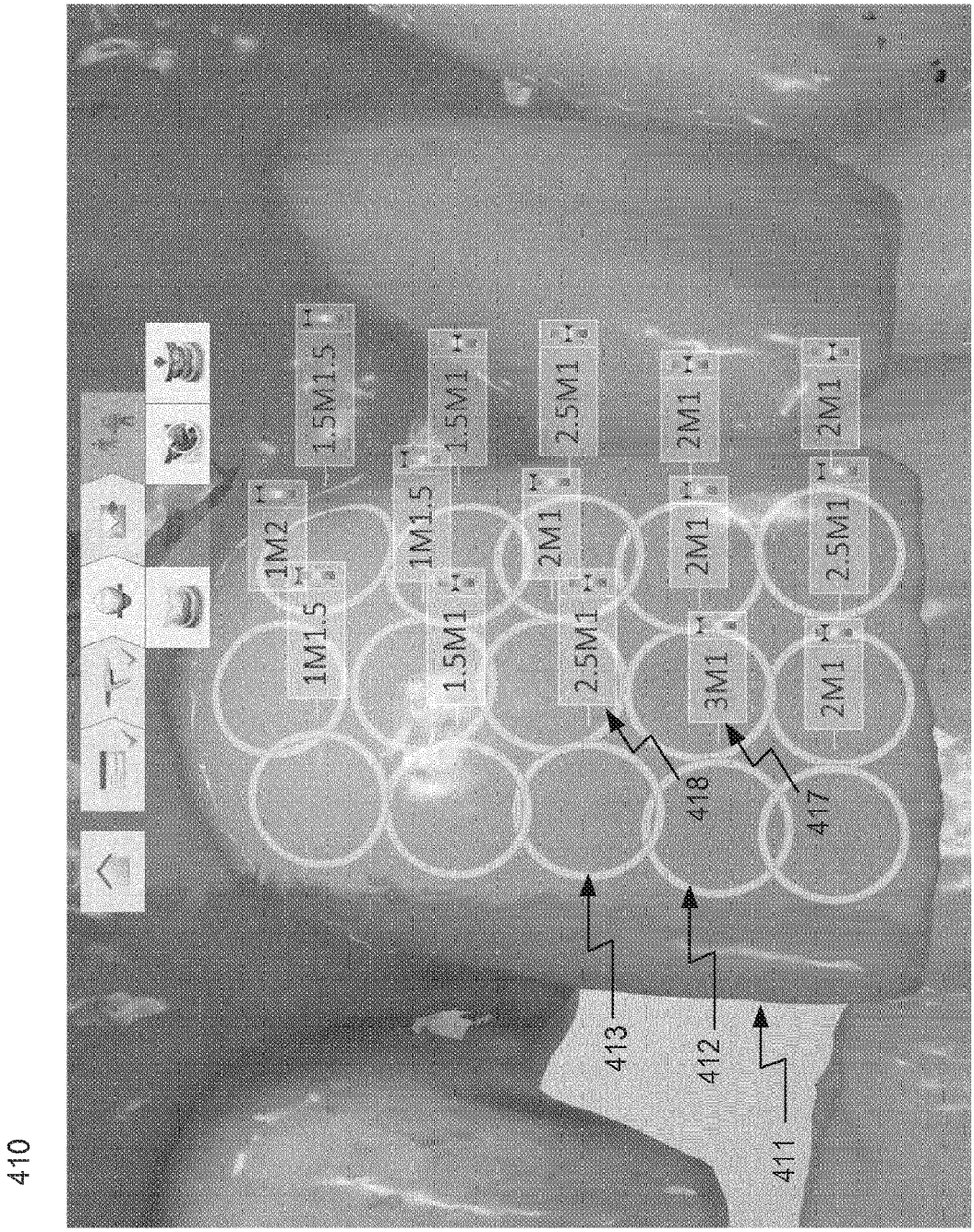
410
1M1.5
1M2
1.5M1.5
1.5M1
1M1.5
1.5M1
2M1
2.5M1
2.5M1
2M1
2M1
3M1
2M1
2.5M1
2M1
413
412
411
418
417

Fig. 4

Fig. 5

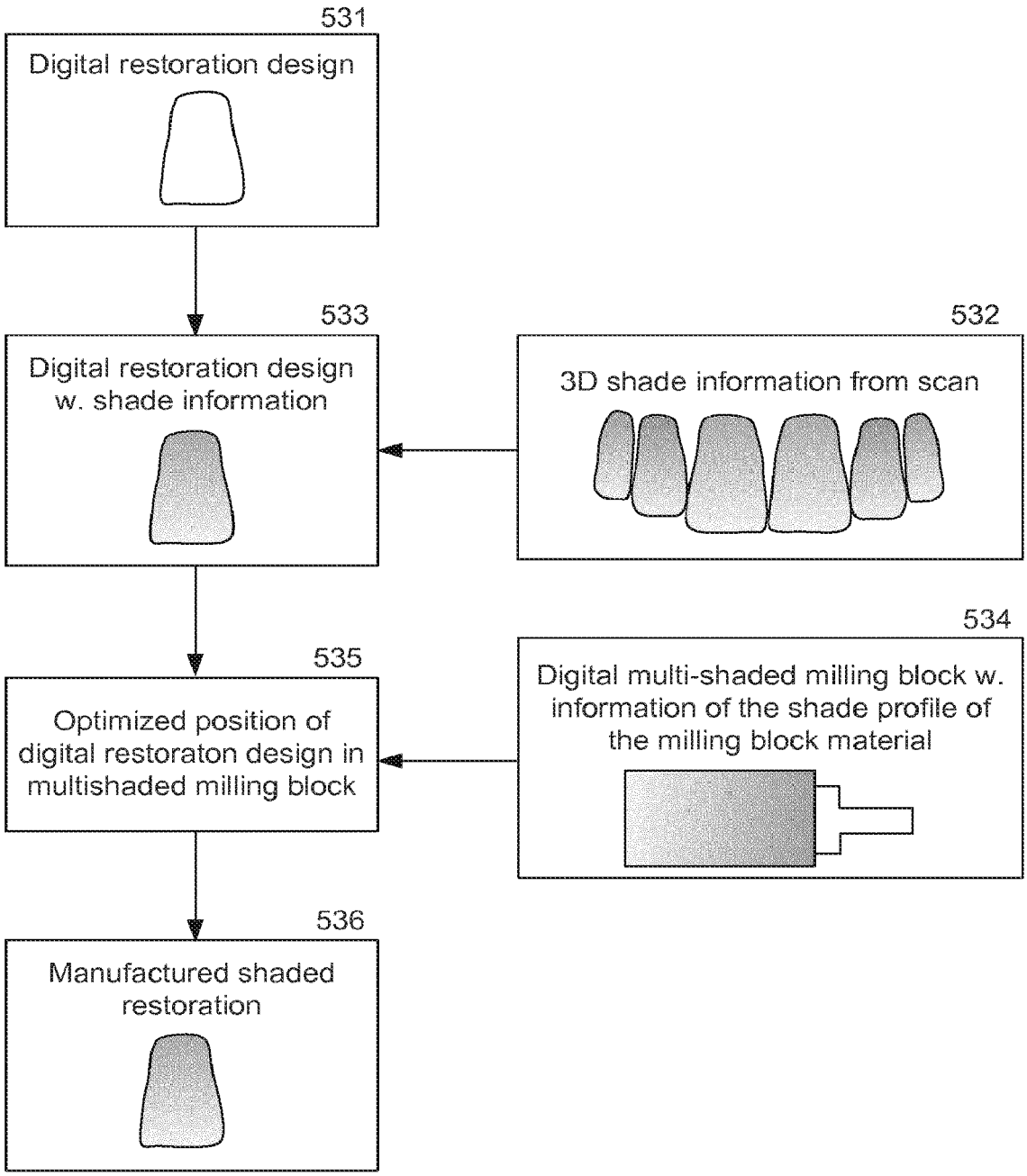
531
Digital restoration design
533
Digital restoration design w. shade information
532
3D shade information from scan
534
Digital multi-shaded milling block w. information of the shade profile of the milling block material
535
Optimized position of digital restoraton design in multishaded milling block
536
Manufactured shaded restoration

Fig. 6

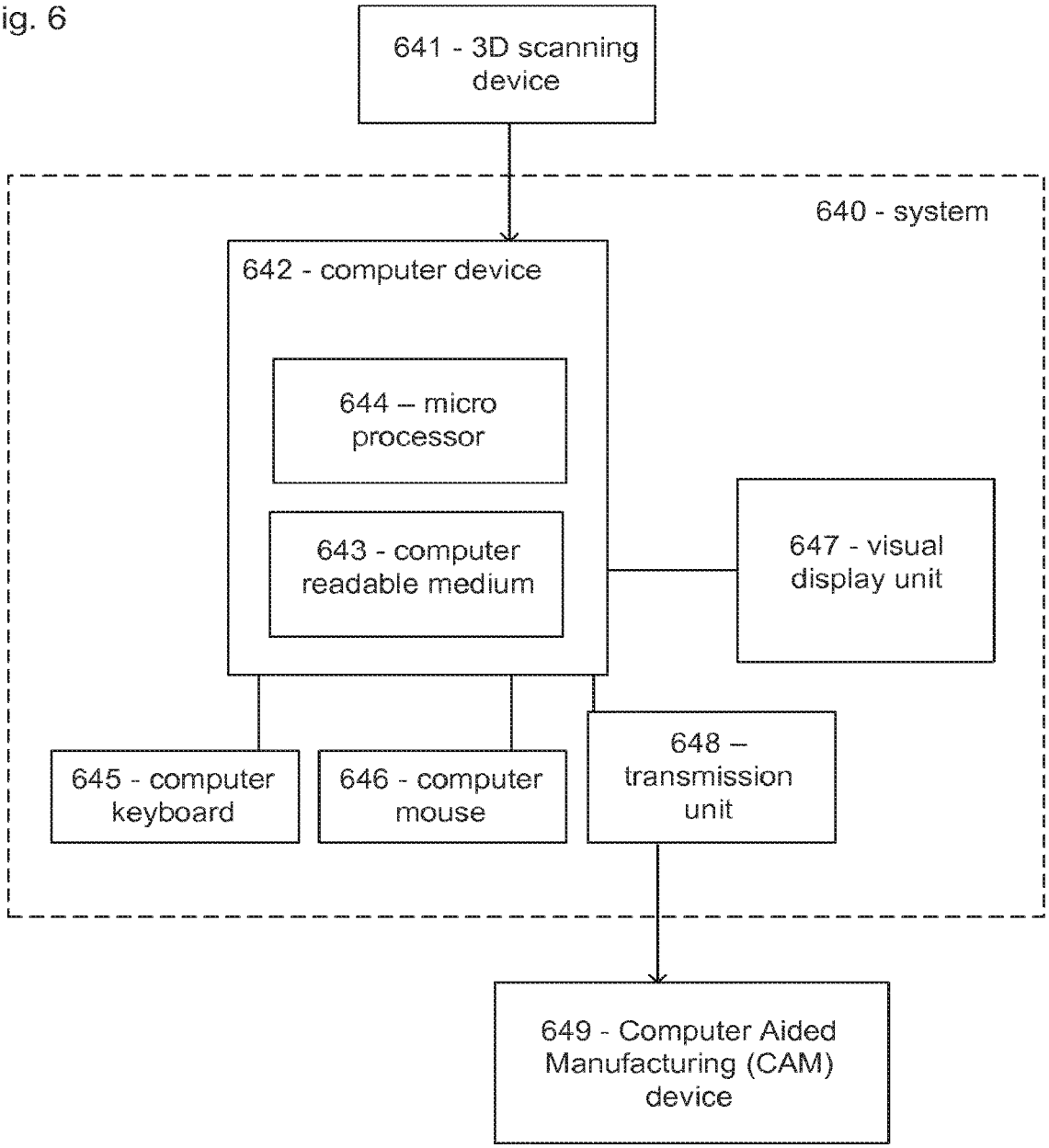
641 - 3D scanning device
640 - system
642 - computer device
644 – micro processor
643 - computer readable medium
647 - visual display unit
645 - computer keyboard
646 - computer mouse
648 – transmission unit
649 - Computer Aided Manufacturing (CAM) device

Fig. 7A

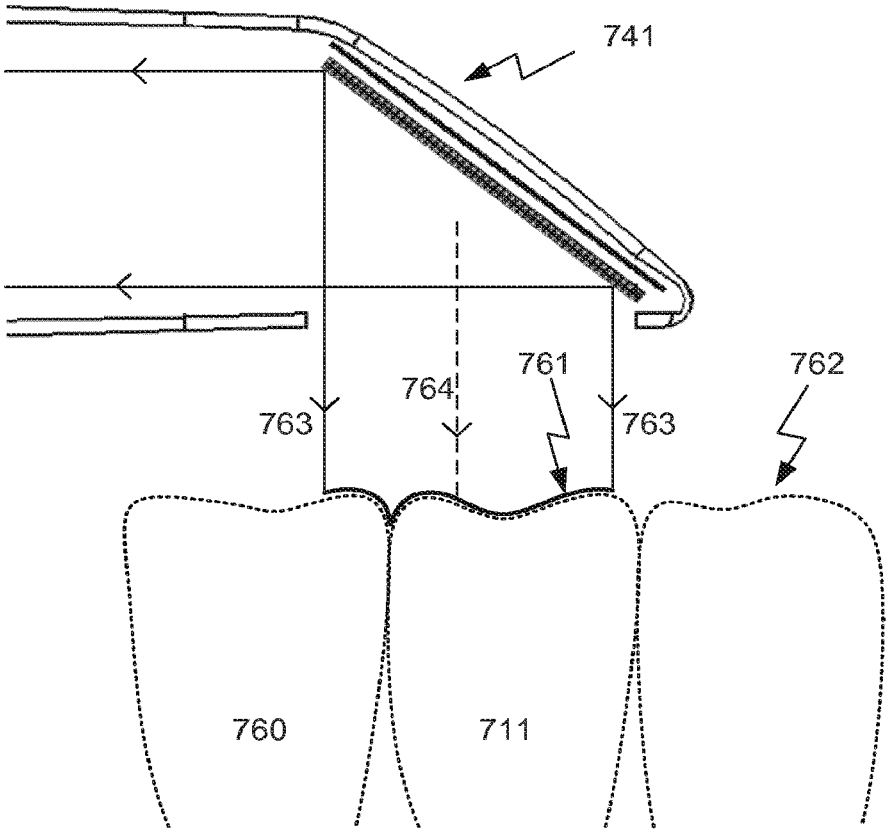

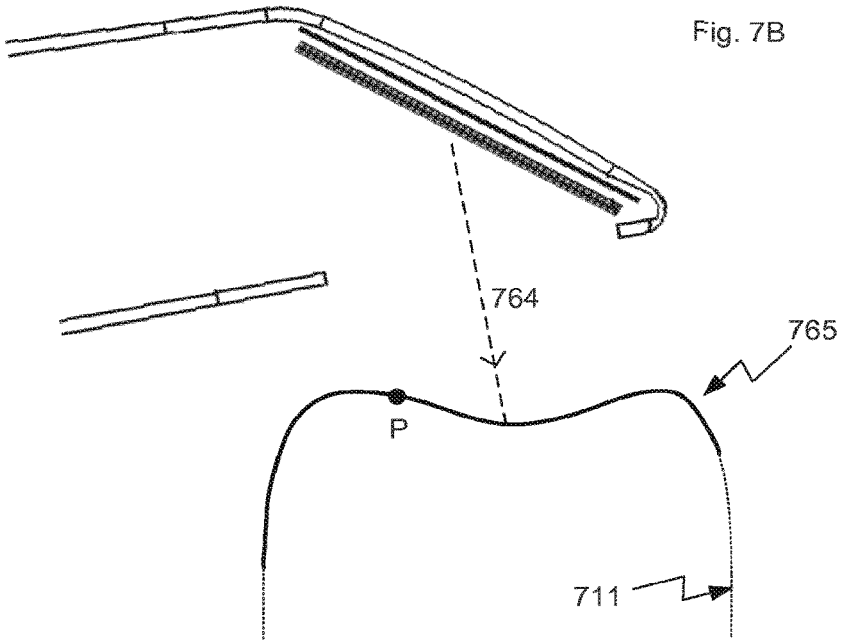

Fig. 7B

Fig. 7C

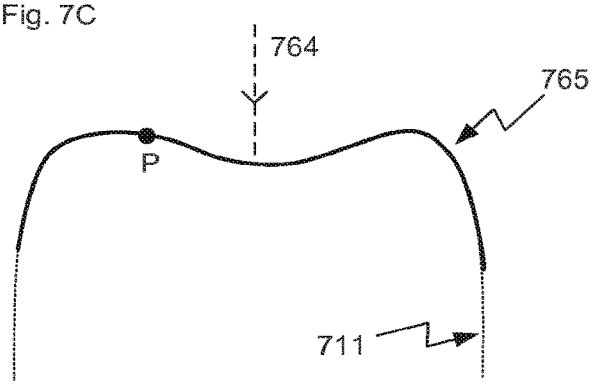

Fig. 7D

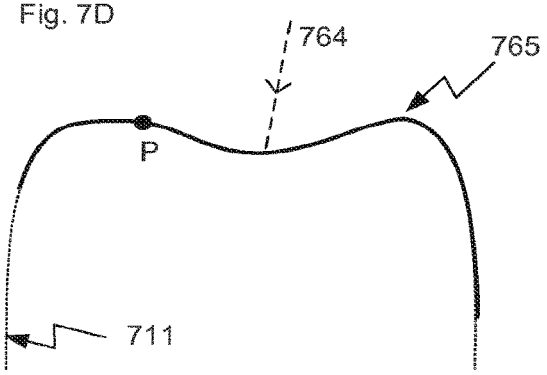

Fig. 8A

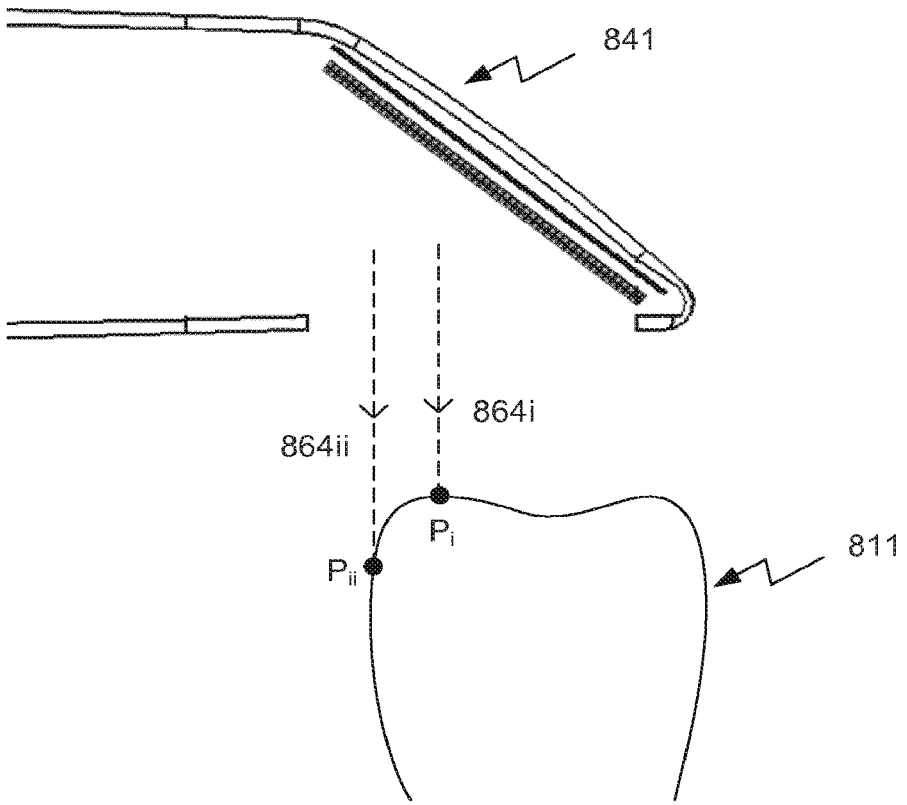

Fig. 8B

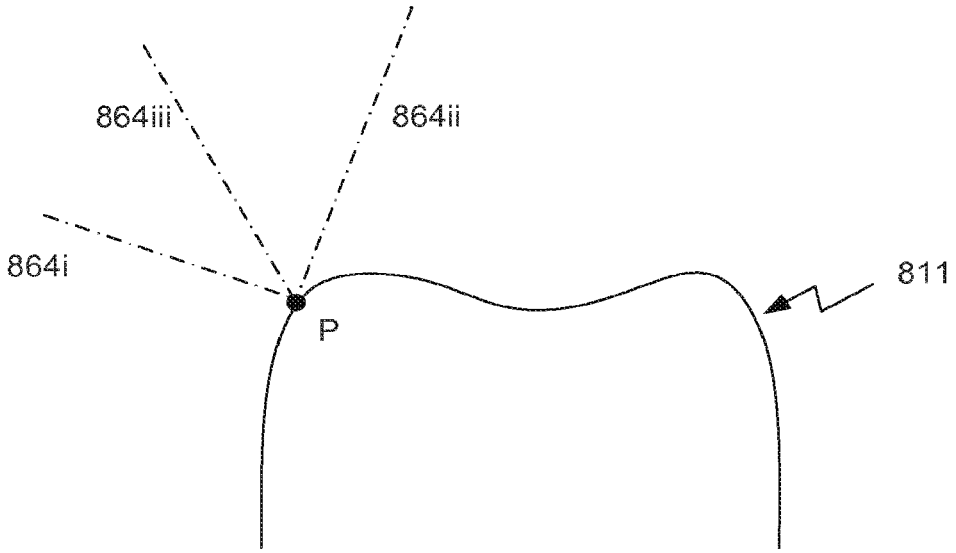

Fig. 9A

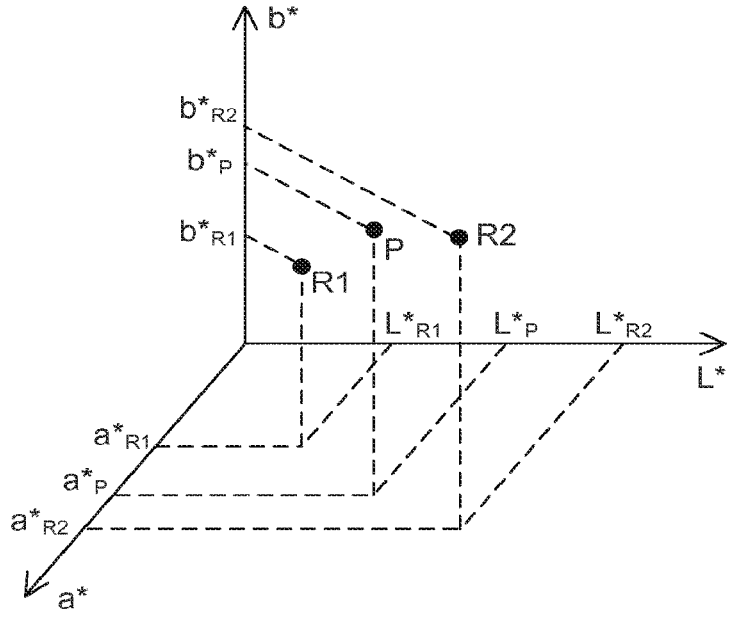

Fig. 9B

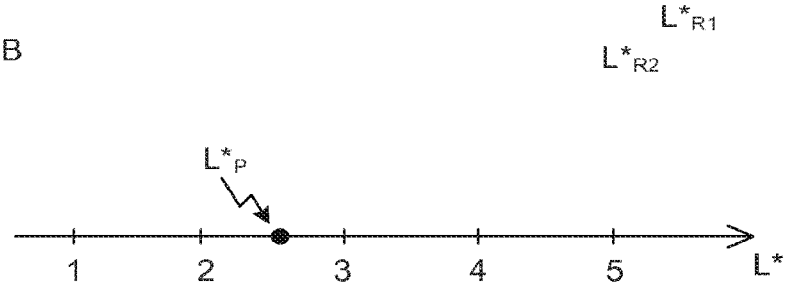

DETECTING TOOTH SHADE

CROSS REFERENCE TO RELATED APPLICATIONS

The present application is a continuation of U.S. application Ser. No. 15/117,078, filed on Aug. 5, 2016, which is a U.S. national stage of International Application No. PCT/EP2015/052537, filed on Feb. 6, 2015, which claims the benefit of Danish Application No. PA 2014-70066, filed on Feb. 7, 2014. The entire contents of each of U.S. application Ser. No. 15/117,078, International Application No. PCT/EP2015/052537, and Danish Application No. PA 2014-700665 are hereby incorporated herein by reference in their entirety.

TECHNICAL FIELD

This invention generally relates to methods and a user interfaces for determining the shade of a patient's tooth or teeth and for utilizing the determined tooth shades for designing and manufacturing dental restorations.

When designing and manufacturing a dental restoration for a patient, such as a crown or a bridge restoration, it is advantageous that both the shape and shade of the manufactured restoration is adapted to the patient's natural teeth surrounding the restoration. If the shade of the restoration differs significantly from the surrounding natural teeth, e.g. is significantly darker or brighter than these, the restoration appear artificial and deteriorate the aesthetic impression of the patient's smile.

The tooth color can be represented in many different color spaces, such as the L*C*h* color space representing color in terms of Lightness, Chroma and Hue, or in the L*a*b* color space as described e.g. by Hassel et al. (Hassel 2012) and Dozic et al. (Dozic 2007). The L*a*b* color space has the advantage that it is designed to approximate human vision with the L* component closely matches human perception of lightness.

In order to aid dental technicians in their manual work of manufacturing a restoration which appears natural, the tooth colors are often expressed in terms of reference tooth shade values of a tooth shade system (often referred to as a tooth shade guide). Each reference tooth shade value in a tooth shade guide represents a predetermined and known tooth color value and often correspond to the color of commercially available ceramics for the production of dental restorations. This is e.g. the case for the VITA 3D-Master or the VITA Classic shade guides provided by VITA Zahnfabrik, Germany.

In the VITA 3D-Master system, tooth shades are expressed in codes referring to the L*C*h* color space, where each code is constructed according to (Lightness, hue, Chroma). One example of a tooth shade value is 3R1.5 where "3" refers to the lightness, "R" to the hue and "1.5" to the Chroma of the tooth. This allows the dentist to describe the shade of the patient's tooth in terms that a dental technician immediately understands, such that the technician will know from which ceramics he should manufacture the restoration to provide that it has the correct shade.

When manually determining which reference tooth shade value best matches the color of a patient's tooth, the dentist holds different pre-manufactured teeth of the shade guide at the tooth for comparison. Often a picture is taken with the pre-manufactured structures arranged at the teeth. The technician who produces the prosthetic then uses the picture in evaluating which ceramic must be used for the different parts of the restoration based on the picture. This process is both time consuming and inaccurate.

SUMMARY

Disclosed is a method for determining shade of a patient's tooth, wherein the method comprises:

obtaining a digital 3D representation of the tooth, where the digital 3D representation comprises shape data and texture data for the tooth; and

determining a tooth shade value for at least one point on the tooth based on the texture data of the corresponding point of the digital 3D representation and on known texture values of one or more reference tooth shade values.

Disclosed is a user interface for determining and displaying shade of a patient's tooth, wherein the user interface is configured for:

obtaining a digital 3D representation of the tooth, said digital 3D representation comprising shape data and texture data for the tooth;

displaying at least the shape data of the digital 3D representation such that the shape of the tooth is visualized in the user interface;

determining a tooth shade value for at least one point on the tooth based on the texture data of the corresponding point of the digital 3D representation and on known texture values of one or more reference tooth shade values; and

displaying the determined tooth shade value.

The texture data of the digital 3D representation expresses the texture of the tooth. The texture data can be a texture profile expressing the variation in the texture over the tooth. The shape data of the digital 3D representation expresses the shape of the tooth.

In some embodiments, the texture information comprises at least one of tooth color or surface roughness.

When the texture information comprises tooth color information, the texture data expressing a texture profile of the tooth may be color data expressing a color profile of the tooth, and the tooth shade value for a point on the tooth may be derived by comparing the color data of the corresponding point of the digital 3D representation with known color values of one or more reference tooth shade values.

Determining both the tooth shade value from a digital 3D representation comprising both shape data expressing the shape of the tooth and texture data expressing a texture profile of the tooth provides the advantage that shade and geometry information are directly linked. This e.g. advantageous e.g. in CAD/CAM dentistry where dental restorations are designed using Computer Aided Design (CAD) tools and subsequently manufactured from the design using Computer Aided Design (CAM) tools. The material used for the manufacture of the dental restoration can then be selected based on the determined tooth shade value.

In many cases, the dental restoration is manufactured with a shade profile where the shade differs from the incisal edge towards cervical end of the restoration. The disclosed invention allows the operator to determine tooth shade values for several points on the tooth such that a shade profile can be determined for the dental restoration. Multi-shaded milling blocks exits which mimics standard tooth shade profiles. Having the shape data and the tooth shade values linked via the digital 3D representation provides that the correct portion of the multi-shaded milling block can be milled out. The remaining portion of the multi-shaded milling block forming

the dental restoration will then have a shape and shade profile which closely resembles that of a natural tooth.

In some embodiments, obtaining the digital 3D representation of the tooth comprises recording a series of sub-scans of the tooth, where at least one of said sub-scans comprises both texture information and geometry information for said tooth, and generating the digital 3D representation of the tooth from the recorded series of sub-scans.

When a plurality of the sub-scans comprise texture information, the texture data for the digital 3D representation can be derived by combining the texture information of the several sub-scans.

The recorded sub-scans comprise at least data of the tooth for which the shade is determined, but potentially also of the neighboring teeth such that for example the shape and location of the neighboring teeth can be taken into account when designing a dental restoration for the tooth. Texture information and texture data for the neighboring teeth can also be used to determine the shade value for the tooth, e.g. by interpolation of the shades determined for the neighbor teeth.

In some embodiments, the method comprises creating a shade profile for the tooth from shade values determined for one or more of points on the tooth.

The shade profile of natural teeth often has a brighter shade at the incisal edge of the tooth and gradually changes into a darker shade towards the cervical end of the tooth, i.e. the end at the patient's gingiva.

When the tooth shade value is determined for one point only the tooth shade profile may be generated based on knowledge of the normal tooth shade profile for that particular type of tooth and patient. This knowledge may relate to how the shade profile normally changes over the tooth, the age and gender of the patients, etc.

Often the profile will be based on tooth shades determined in several points on the tooth to provide the most reliable tooth shade profile.

In some embodiments the user interface is configured for creating a shade profile for the tooth from tooth shade values determined for one or more points on the tooth.

In some embodiments, the tooth shade profile can be created by interpolation of tooth shade values determined for points distributed over the tooth surface with some distance between the points. The tooth shade value for some parts of the tooth surface are then not derived directly from sub-scan texture information relating to these parts but from the determined tooth shade values for other parts/points on the tooth surface. A tooth shade profile for the entire labial/buccal surface of the tooth can thus be created from a selection of points on the surface providing a fast and often sufficiently accurate procedure for creating the tooth shade profile. The interpolation of the tooth shade values can be realized by an interpolation in each of the coordinates of the color space used to describe the tooth color.

In some embodiments, the tooth shade profile comprises a one or more tooth shade regions on the tooth surface where an average tooth shade is derived for each region from tooth shade values determined for a number of points within the region.

The tooth shade region can be defined by a structure encircling a portion of the tooth surface in the digital 3D representation, where either the operator or a computer implemented algorithm decides where each geometric structure is located on the digital 3D representation. Different shapes (e.g. circles, squares, or rectangles) and sizes (e.g. corresponding to a few millimeters) of the geometric structure can be used. The number of points within the geometrical structure can be increased to provide a more accurate measure of the shade or reduced to provide a faster calculation.

The average tooth shade value for a region can e.g. be derived as a weighted average where the tooth shade value for points in the center of the structure is assigned a higher weight than tooth shade value of points closer to the boundary.

The tooth surface can also be divided into a coronal, a middle and a cervical region. Some natural teeth has a shade profile which can be expressed by such a division and many dentists and dental technicians are familiar with such a division

In some embodiments, tooth shade values are determined for a plurality of teeth, i.e. on parts of the digital 3D representation corresponding to two or more teeth, and a tooth shade value and/or a tooth shade profile for each of these teeth is created from the determined tooth shade values.

In some embodiments, the texture data at least partly are derived by combining the texture information from corresponding parts of a number of the sub-scans.

The digital 3D representation can be generated through registration of sub-scans into a common coordinate system by matching overlapping sections of sub-scans, i.e. the sections of the sub-scans which relate to the same region of the tooth. When two or more sub-scans also comprise texture information relating to the same region of the tooth, deriving the texture data for this region in the digital 3D representation can comprise combining the corresponding texture information, i.e. the texture information in the sub-scans corresponding to the same sections of the tooth.

Deriving the texture data based on texture information from two or more sub-scan can provide a more accurate measurement of the texture data. The texture information of one sub-scan for a particular region of the tooth may be unreliable e.g. due to the angle between the surface in this region and the scanner when this particular sub-scan was recorded. The combination of texture information from several sub-scans can provide a more reliable color.

In some embodiments, combining the texture information from the sub-scans comprises interpolating the texture information, i.e. texture information from parts of the sub-scans corresponding to a point on the tooth are interpolated to determine the texture data for that point.

Such an interpolation can provide that the determined texture data is more accurate e.g. in cases where the texture information for a point on the tooth is not linearly varying over the sub-scans such that a simple averaging will not provide the best result.

In some embodiments, combining the texture information from the sub-scans comprises calculating an average value of the texture information, i.e. texture data for a point on the digital 3D representation are determined by averaging the texture information of the sub-scans corresponding to that point on the tooth.

In some embodiments, the calculated average value is a weighted average of the texture information.

This approach has the advantage that the derived texture data of the digital 3D representation are not as sensitive to errors in the texture information of a single sub-scan.

Such errors can be caused by several factors. One factor is the angle between the optical path of the probe light at the tooth surface and the tooth surface itself. When utilizing e.g. the focus scanning technique, the texture data for a point on the tooth is preferably derived from a number of sub-scans where at least some of the sub-scans are recorded at

different orientations of the scanner relative to the teeth. The sections of the sub-scans relating to this point are hence acquired at different angles relative to the tooth surface in this point.

A portion of a sub-scan recorded from a surface perpendicular to the optical path of the probe light at the tooth may be dominated by specular reflected light which does not describe the texture of the tooth but rather the spectral distribution of the probe light. A portion of a sub-scan recorded from a tooth surface almost parallel to the optical path is often quite weak and hence often provide an erroneous detection of the texture at that point.

In some embodiments, the texture information from parts of a sub-scan relating to a tooth surface which is substantially perpendicular or parallel to the optical path are assigned a low weight in the weighted averaging of the texture information to determine the texture data for the point.

The orientation of the scanner relative to the tooth when a sub-scan is acquired can be determined from the shape of the sub-scan. Parts of the sub-scan relating to tooth surfaces which are substantially parallel or perpendicular to the optical path can thus immediately be detected in the sub-scan such that the texture information of the corresponding parts are assigned at low weight when determining the texture data for this point from a series of sub-scans.

A specular reflection from the tooth often has an intensity which is significantly higher than that of e.g. diffuse light from surfaces which have an oblique angle relative to the optical path. In some cases the specular reflection will saturate the pixels of the image sensor used for the recording of the sub-scans.

In some embodiments, the method comprises detecting saturated pixels in the recorded sub-scans and assigning a low weight to the texture information of the saturated pixels when combining the texture information from the sub-scans, i.e. when calculating the weighted average of the texture information.

Specular reflection from a tooth surface may also be detected from a comparison between the spectrum of the light received from the tooth and that of the probe light. If these spectra a very similar it indicates that the tooth has a perfectly white surface which is not natural. Such texture information may thus be assigned a low weight in a weighted average of texture information.

In some embodiments determining the tooth shade value for the point comprises selecting the reference tooth shade value with known texture value closest to the texture data of the point.

When the texture data comprises color data, selecting the tooth shade value of the point can comprise calculating the color difference between the determined color data in the point and the color data of the reference tooth shade values. This difference can e.g. be calculated as a Euclidian distance in the used color space. As an example, Dozic et al. (Dozic 2007) describes that the Euclidian distance ΔE between two points (L_1*, a_1*, b_1*) and (L_2*, a_2*, b_2*) in the L*a*b* color space is given by:

$$\Delta E = \sqrt[2]{(L_1^* - L_2^*)^2 + (a_1^* - a_2^*)^2 + (b_1^* - b_2^*)^2}$$

Selecting the tooth shade value can then comprise determining for which of the reference tooth shades the color difference, i.e. the Euclidian distance, is the smallest.

In some embodiments determining the tooth shade value for the point comprises an interpolation of the two or more reference tooth shade values having known texture values close to the texture data of the point.

This interpolation provides that the tooth shade can be represented with a more detailed solution than what is provided by the tooth shade standard used to describe the tooth shade. For instance when using a Lightness-Hue-Chroma code a tooth shade value of 1.5M2.5 can be determined for the tooth by interpolation of Lightness values of 1 and 2, and Chroma values of 2 and 3.

The tooth shade value can be displayed in a user interface e.g. together with the digital 3D representation of the tooth. If the digital 3D representation also contains parts relating to other teeth the tooth shade value for the tooth is preferably displayed at the tooth, such as at the point of the for which the tooth shade value has been determined.

The tooth shade value can also be represented as a color mapped onto the digital 3D representation.

When a dental restoration is designed based on the determined tooth shade value this can provide a visualization of how the restoration will appear together with neighboring teeth also contained in the digital 3D representation obtained by scanning the teeth.

In some embodiments, the method comprises deriving a certainty score expressing the certainty of the determined tooth shade value.

Deriving a certainty score for the determined tooth shade value provides the advantage that a measure of how accurate the determined value is can be displayed to the operator, preferably when the patient is still at the clinic such that further scanning can be performed if this is required to provide a more precise tooth shade value.

In some embodiments, the method comprises generating a visual representation of the certainty score and displaying this visual representation in a user interface.

In some embodiments, the method comprises generating a certainty score profile at least for a portion of the tooth, where the certainty scope profile represents the certainty scores for tooth shade values determined for a number of points on the tooth, such as for the values in a tooth shade profile for the tooth. The certainty score profile can be mapped onto the digital 3D representation of the tooth and visualized in a user interface. When the tooth shade profile also is mapped onto the tooth digital 3D representation the operator may be allowed to toggle between having the tooth shade profile and having the certainty scope profiled visualized on the digital 3D representation.

In some embodiments the visual representation of the certainty score is displayed together with or is mapped onto the digital 3D representation of the tooth.

In some embodiments, the method comprises comparing the derived certainty score with a range of acceptable certainty score values. This is done to verify that the certainty score is acceptable, i.e. that the determined tooth shade value is sufficiently reliable.

One boundary of the range can be defined by a threshold value. When a high certainty scope indicates that the determined shade value most likely is correct, the threshold value may define the lower boundary of the range and vice versa.

A visual representation of the certainty score or of the result of the comparison of the certainty score with the range can be generated and displayed in a user interface. Preferably, this visual representation is displayed together with the determined tooth shade value.

In some embodiments, the method comprises deciding based on the certainty score whether the determined tooth

shade value or tooth shade profile is acceptable. This may be based on the comparison of the derived certainty score and the range of acceptable certainty score values, e.g. where it is decided that the determined tooth shade value is acceptable if the certainty score is within the range of acceptable values.

In some embodiments, the certainty measure relates to how uniform the sub-scan texture information is at the point.

If large variations are found in the texture information in the vicinity of the parts corresponding to the point for a substantial fraction of the sub-scans, the texture data derived therefrom may be unreliable and the tooth shade value derived for this point is accordingly not very reliable.

In some embodiments, the certainty measure relates to how close the texture data is to the known texture value of the determined tooth shade value. In particular, the certainty measure may relate to how close one parameter of the color data of the digital 3D representation is to the corresponding parameter of the known color for the determined tooth shade value. For example, the certainty measure may relate to the difference in the lightness parameter between point of the digital 3D representation and the determined tooth shade value.

The Euclidian distance between the color data to the selected reference tooth shade value can also be used in determining the certainty measure. If the Euclidian distance is above a threshold value the uncertainty is then evaluated to be too large. The color data can here both relate to color data of the point or the average color data for a region surrounding the point.

In some embodiments, the certainty measure relates to the amount of texture information used to derive the texture data at the point.

When the texture data for the point is derived from a limited amount of texture information the texture data, and accordingly the tooth shade value derived therefrom, may be less reliable than the tooth shade values derived from large amounts of texture information.

In some embodiments, the visual representation of the certainty score comprises a binary code, such as red for certainty scores outside a range of acceptable certainty score values, and green for certainty scores within the range, a bar structure with a color gradient, a numerical value, and/or a comparison between the texture data and the known texture value of the determined tooth shade value.

In some embodiments, the visual representation of the certainty score comprises a certainty score indicator.

The certainty score indicator may comprise a bar structure with a color gradient going from a first color representing a low certainty score to a second color representing a high certainty score. The first color may be red and the second color green. The color gradient of the bar structure may be configured to have an intermediate color, e.g. yellow representing the threshold value for the certainty score. The certainty score indicator may comprise marker which is arranged relative to the color gradient of the bar structure such that it indicated the certainty score.

In some embodiments, the visual representation of the certainty score comprises a numerical value, such as a numerical value in an interval extending from a lower limit indicating a low certainly, i.e. a relatively uncertain tooth shade value, to a higher limit indicating a high certainty, i.e. a relatively certain tooth shade value.

In some embodiments, the one or more reference tooth shade values relate to shade values for natural teeth with intact surface and/or to shade values for teeth prepared for a dental restoration.

The reference tooth shade values used for determining the tooth shade can be selected based on the tooth. Intact and healthy teeth normally have tooth shades in one range of tooth shade values where a tooth prepared for a dental restoration has a tooth shade in another range, which may overlap with the range for healthy teeth. It may thus be advantageous that the operator enters whether the tooth is intact or prepared for a restoration and the appropriate color space is used in the comparison with the texture data.

If the color data in the point on the digital 3D representation of the tooth has a poor match to all the reference tooth shade values of the selected tooth shade system/guide the point may e.g. be on the gingiva of the patient or relate to silver filling.

In some embodiments, the method comprises comparing the texture data with known texture values for soft oral tissue, such as gum tissue and gingiva.

This may e.g. be relevant when the certainty scores are outside said range of acceptable certainty score values for all tooth shade values of a tooth shade system, i.e. if there is a poor match between the texture data and the known texture for all the tooth shades of the reference set.

In a user interface for implementing the method, it may be suggested to the operator that the point perhaps is not on a tooth surface but on the gums or gingiva of the patient. This suggestion may be provided both when the texture data has been found to give a good match with known texture values of gum/gingiva and/or when the texture data has a poor match with the known texture values of the reference tooth shade values in the tooth shade system or systems.

In some embodiments, the method comprises determining an alternative tooth shade value for the point when said certainty score is outside said range of acceptable certainty score values.

In some embodiments, the method comprises displaying the alternative tooth shade value in the user interface optionally together with the digital 3D representation of the patient's set of teeth and/or the initially determined tooth shade value

The digital 3D representation of the tooth is generated at least partly from the geometry information of the sub-scans. In some embodiments, the texture information of the sub-scans is also taken into account when generating the digital 3D representation of the tooth.

Sub-scans comprising texture information and geometry information may be recorded for more than said tooth, such that the generated digital 3D representation may comprise shade data expressing the shape and texture data expressing the texture profile of several of the patient's teeth.

Disclosed is a method for determining shade of a patient's tooth, wherein the method comprises:

- recording a series of sub-scans of the patient's set of teeth, where a plurality of said sub-scans comprises both texture information and geometry information for said tooth;
- generating a digital 3D representation of the tooth from said sub-scans, wherein the digital 3D representation comprises shape data expressing the shape of the tooth and texture data expressing a texture profile of the tooth; and
- determining a tooth shade value for a point on the tooth by comparing the texture data of the corresponding point of the digital 3D representation with a known texture value of one or more reference tooth shade values.

Disclosed is a user interface for determining and displaying shade of a patient's tooth, wherein the user interface is configured for:

obtaining a digital 3D representation of the tooth, said digital 3D representation comprising shape data expressing the shape of the tooth and texture data expressing a texture profile of the tooth;

displaying at least the shape data of the digital 3D representation such that the shape of the tooth is visualized in the user interface;

determining a tooth shade value for a point on the tooth by comparing the texture data of the corresponding point of the digital 3D representation with a known texture value of one or more reference tooth shade values; and

displaying the determined tooth shade value.

In some embodiments, the user interface is configured for deriving a certainty score expressing the certainty of the determined tooth shade value for said point.

In some embodiments, the user interface comprises a virtual tool which when activated on a point of the digital 3D representation of the tooth provides that

the determined tooth shade value for the point; and/or

a visual representation of a certainty score for the determined tooth shade value; and/or

a visual representation of a comparison of the derived certainty score with a range of acceptable certainty score values

is visualized in the user interface.

The user interface can then provide the operator with an opportunity to decide based on the visualized certainty score and/or the visual representations whether the determined tooth shade value or tooth shade profile is acceptable.

In some embodiments, the visual representation of the comparison of the derived certainty score with the range of acceptable certainty score values comprises a binary code, such as red for certainty scores outside a range of acceptable certainty score values, and green for certainty scores within the range. Other means for this visualization are described above.

The visualized certainty score and/or the representation(s) of the certainty score or comparison of the certainty score with the range of acceptable certainty score values may be displayed at the digital 3D representation in the user interface or in a shade value region of the user interface.

In some embodiments, the user interface is configured for determining an alternative shade value for the point and for displaying the alternative shade value when the certainty scores outside a range of acceptable certainty score values.

Disclosed is a method for designing a dental restoration for a patient, wherein the method comprises:

obtaining a digital 3D representation of at least one tooth, said digital 3D representation comprising shape data expressing the shape of the tooth and texture data expressing a texture profile of the tooth;

determining a tooth shade value for a point on the tooth by comparing the texture data of the corresponding point of the digital 3D representation with a known texture value of one or more reference tooth shade values; and

creating a digital restoration design for one or more of the patient's teeth; and

selecting a restoration shade of the digital restoration design based on said tooth shade value.

The digital restoration design can e.g. be for the manufacture of dental prosthetic restoration for the patient, such as a crown or a bridge restoration, where the digital restoration design expresses a desired shape and shade profile of the dental restoration. Such digital restoration designs can be in the form of a CAD model of the dental restoration.

In some embodiments, the method comprises suggesting a dental material for manufacturing the dental restoration from the digital restoration design based on the determined restoration shade.

In cases where the dental restoration is designed and manufactured for an existing tooth which has an acceptable shade, the tooth shade value or tooth shade profile can be determined for the existing tooth and the shade of the digital restoration design based on the tooth shade value or tooth shade profile of the existing tooth.

This may e.g. be advantageous for the crown portions of a bridge restoration in the case where the tooth which is intended to accept the crown portion of the bridge is a healthy tooth.

In some cases the dental restoration is designed and manufactured for a tooth which either is damaged or has an undesired shade profile, such as for a broken or dead tooth. In such cases it can be advantageous to determine the tooth shade value or tooth shade profile for one or more of the neighboring teeth and selecting the restoration shade of the digital restoration design from e.g. an interpolation of the tooth shade values/profiles of the neighboring teeth.

Disclosed is a method for designing a dental restoration for a first tooth, wherein the method comprises:

obtaining a digital 3D representation of the patient's set of teeth, said digital 3D representation comprising shape data and texture data expressing the shape and texture profile, respectively, of at least one second tooth;

designing a digital restoration design for the first tooth;

deriving a desired texture profile of the digital restoration design from the texture data of the at least one second tooth; and

determining a restoration shade value or restoration shade profile of the digital restoration design by comparing the desired texture profile with texture values for one or more reference tooth shade values.

In some embodiments, the desired texture profile is derived by interpolation or averaging of the texture data of the digital 3D representation of the neighbor teeth.

In some embodiments, one or more of the sub-scans comprise texture information for the patient's soft tissue, and optionally geometry information for said soft tissue. The generated digital 3D representation may then comprise shape data expressing the shape of the soft tissue and texture data expressing a texture profile of the soft tissue.

From this information, an aesthetica) pleasing denture can be designed where the color of the soft tissue part of the denture is selected based on the texture profile of the corresponding part of the digital 3D representation.

Knowledge of the texture of the soft tissue, such as of the color of the soft tissue, can also be used for diagnostics. When the texture data of a point on the digital 3D representation corresponding to soft tissue does not provide a sufficiently good match with a known range of texture values for soft tissue, a warning may be prompted in a user interface to alert the operator that the soft tissue is suspicious.

Disclosed is a system for determining shade of a patient's tooth, wherein the system comprises:

a scanner capable of recording a digital 3D representation of the tooth, where the digital 3D representation comprises shape data and texture data for the tooth; and

a data processing system comprising a computer-readable medium having stored thereon the program code means for causing the data processing system to determine a

tooth shade value for at least one point on the tooth based on the texture data of the corresponding point of the digital 3D representation and on known texture values of one or more reference tooth shade values using the method according to any of the embodiments.

In some embodiments, the sub-scans are recorded using an intra-oral scanner, such as the 3Shape TRIOS intra-oral scanner.

The intra-oral scanner may be configured for utilizing focus scanning, where the sub-scans of the scanned teeth are reconstructed from in-focus images acquired at different focus depths. The focus scanning technique can be performed by generating a probe light and transmitting this probe light towards the set of teeth such that at least a part of the set of teeth is illuminated. Light returning from the set of teeth is transmitted towards a camera and imaged onto an image sensor in the camera by means of an optical system, where the image sensor/camera comprises an array of sensor elements. The position of the focus plane on/relative to the set of teeth is varied by means of focusing optics while images are obtained from/by means of said array of sensor elements. Based on the images, the in-focus position(s) of each of a plurality of the sensor elements or each of a plurality of groups of the sensor elements may be determined for a sequence of focus plane positions.

The in-focus position can e.g. be calculated by determining the maximum of a correlation measure for each of a plurality of the sensor elements or each of a plurality of groups of the sensor elements for a range of focus planes as described in WO2010145669. From the in-focus positions, sub-scans of the set of teeth can be derived with geometry information relating to the shape of the scanned surface. When e.g. the image sensor is a color sensor and the light source provides a multispectral signal a plurality of the sub-scans can include both geometry information and texture information, such as color information, for said tooth.

A digital 3D representation of the set of teeth can then be generated from the recorded sub-scans by e.g. the use of an Iterative Closest Point (ICP) algorithm. Iterative Closest Point (ICP) is an algorithm employed to minimize the difference between two clouds of points. ICP can be used to reconstruct 2D or 3D surfaces from different scans or sub-scans. The algorithm is conceptually simple and is commonly used in real-time. It iteratively revises the transformation, i.e. translation and rotation, needed to minimize the distance between the points of two raw scans or sub-scans. The inputs are: points from two raw scans or sub-scans, initial estimation of the transformation, criteria for stopping the iteration. The output is: refined transformation. Essentially the algorithm steps are:

1. Associate points by the nearest neighbor criteria.
2. Estimate transformation parameters using a mean square cost function.
3. Transform the points using the estimated parameters.
4. Iterate, i.e. re-associate the points and so on.

The generated digital 3D representation formed by such a procedure comprises shape data expressing the shape of the tooth. The texture information of the sub-scans can be used in various ways to provide that the generated digital 3D representation also comprises texture data expressing a texture profile of the tooth. For a number of the sub-scans, the part of the sub-scan relating to the same point on the tooth can be identified, e.g. during the ICP procedure. The corresponding texture information of these parts of the sub-scans can then be combined to provide the texture data for that point.

Furthermore, the invention relates to a computer program product comprising program code means for causing a data processing system to perform the method according to any of the embodiments, when said program code means are executed on the data processing system, and a computer program product, comprising a computer-readable medium having stored there on the program code means.

The present invention relates to different aspects including the method and user interface described above and in the following, and corresponding methods and user interface, each yielding one or more of the described advantage, and each having one or more embodiments corresponding to the embodiments described above and/or disclosed in the appended claims.

BRIEF DESCRIPTION OF THE DRAWINGS

The above and/or additional objects, features and advantages of the present invention, will be further elucidated by the following illustrative and non-limiting detailed description of embodiments of the present invention, with reference to the appended drawings, wherein:

FIG. **1** shows an example of a flow chart for an embodiment.

FIGS. **2** to **4** show parts of screen shots of user interfaces.

FIG. **5** shows steps of a method for designing a dental restoration.

FIG. **6** shows a schematic of a system for determining tooth shade values

FIGS. **7**A-**7**D and **8**A-**8**B show schematics of intra-oral scanning.

FIGS. **9**A-**9**B illustrates one way of determining tooth shade values from texture data.

DETAILED DESCRIPTION

In the following description, reference is made to the accompanying figures, which show by way of illustration how the invention may be practiced.

FIG. **1** shows an example of a flow chart **100** for an embodiment of the method for determining shade of a patient's tooth.

In step **102** a series of sub-scans of the patient's set of teeth is recorded, where a plurality of said sub-scans comprises both texture information and shape information for the tooth.

In step **103** a digital 3D representation of the tooth is generated from said sub-scans, where the digital 3D representation comprises texture data expressing a texture profile of the tooth. The digital 3D representation further comprises shape data expressing the shape of the tooth such that the shape of the tooth can be visualized in a user interface.

In step **104** a tooth shade value for a point on the tooth is determined based on the texture data. This is done at least in part by comparing the texture data of the corresponding point of the digital 3D representation with a known texture value of one or more reference tooth shade values. The reference tooth shade values may be provided in the form of a library file and comprise tooth shade values and corresponding texture values based on e.g. the VITA 3D-Master and/or the VITA Classic tooth shade systems.

FIGS. **2** to **4** show parts of screen shots from user interfaces in which derived tooth shade values and visual representation of the corresponding certainty scores for a number of tooth regions are displayed at the digital 3D representations of the patient's set of teeth.

The point or points on the tooth for which the tooth shade value(s) is/are determined can be selected by an operator. This can be the case e.g. when the digital 3D representation of the tooth is visualized in a user interface and the operator uses a pointing tool, such as a computer mouse, to indicate where on the digital 3D representation of the tooth, he wishes to determine the tooth shade value. The point or points can also be selected by a computer implemented algorithm based on predetermined positions on the digital 3D representation of the tooth, such as a point arranged at a certain distance to the incisal edge of the tooth.

The screen shot **210** seen in FIG. **2** shows three regions **212**, **213**, **214** on the digital 3D representation of the patient's set of teeth. Two of these **212**, **213**, are selected at the part of the digital 3D representation corresponding to the tooth **211** while the third **214** is selected on the soft tissue part **215** of the digital 3D representation. Average tooth shade value for a region can be calculated by averaging over tooth shade values derived for a number of points within the region or by calculating an average texture value for the region and determining the average tooth shade value therefrom. The average tooth shade values are displayed in tooth value sections **217**, **218**, **219** linked to the regions in the user interface. In the tooth value sections **217**, **218** relating to the regions **212**, **213** two tooth shade values are displayed where the upper shade value is derived using known texture values corresponding to the reference tooth shade values of the VITA 3D-Master tooth shade system and the lower tooth shade values relates to the VITA Classic tooth shade system. It is also seen that for the region **213** closest to the gingiva, the tooth shade is determined to be 2L1.5 in the VITA 3D-Master system and B1 in the VITA Classic system. In FIG. **2** the certainty scores for the derived tooth shade values are visualized as a certainty score indicator displayed next to the tooth shade values. In FIG. **2** the visualization of the certainty score indicator is in the form of a checkmark which indicates that the certainty score is sufficiently good to provide that the derived tooth shade values can be relied upon. The color of the checkmark may provide further information to the certainty score, such as in cases where a green checkmark indicates a more certain tooth shade value than a yellow checkmark. The third region **214** is located at the patient's soft tissue. An anatomical correct tooth shade value can hence not be calculated from the texture data of that part of the digital 3D representation of the patient's teeth and the corresponding certainty scope is accordingly very low. The visualization of the certainty score in the tooth value section **219** is hence a cross indicating that the derived shade value was rejected. Further no shade value is indicated in the tooth value section **219**.

The screen shot **310** seen in FIG. **3** shows two regions **312**, **314** on the digital 3D representation of the patient's set of teeth. One of these regions **312** is selected at the part of the digital 3D representation corresponding to the tooth **311** while the second region **314** is selected on the soft tissue part **315** of the digital 3D representation. Average tooth shade value for a region can be calculated as described above in relation to FIG. **2**. Shade value sections **317**, **319** are also displayed for the regions **312**, **314**. Two tooth shade values **321** are derived for the region **312** and displayed in the corresponding tooth value section **317**, where the upper value is derived using known texture values corresponding to the reference tooth shade values of the VITA 3D-Master tooth shade system (derived tooth shade value is 1.5M1) and the lower value using the VITA Classic tooth shade system (derived tooth shade value is B1). In FIG. **3** the certainty score is visualized in the form of a certainty score indicator **322** comprising a vertical bar with a color gradient going from red representing a poor certainty score to green representing a good certainty score. The certainty score indicator has a marker indicating the certainty score on the bar. It is seen that the tooth shade value 1.5M1 of the VITA 3D-Master system is more certain than the tooth shade value B1 of the VITA Classic system for this region. The tooth shade value of 1.5M1 is found by interpolation of the reference tooth shades 1M1 and 2M2.

The second region **314** is located at the patient's soft tissue. An anatomical correct tooth shade value can hence not be calculated from the texture data of that part of the digital 3D representation of the patient's teeth and the corresponding certainty scope is accordingly very low as seen in the vertical bars of tooth value section **319**.

FIG. **4** shows a screen shot **410** where determined tooth shade values are derived for a total of 15 regions on the digital 3D representation of the tooth **411**. The tooth shade values are all derived based on the known texture values of the reference tooth shade values of the VITA 3D-Master tooth shade system. The certainty scores are visualized in the form of a certainty score indicator comprising a vertical bar with a color gradient going from red representing a poor certainty score to green representing a good certainty score. As can be seen in the tooth value sections **417**, **418** of the user interface there are large variations in the certainty scores. For example, the certainty score for the region **412** is almost at maximum while the certainty score of the region **413** is much close to a threshold for acceptable certainty score values. When tooth shade values are determined for a number of points on the tooth, the points may be arranged in a grid over the part of the digital 3D representation of the tooth.

FIG. **5** shows steps of a method for designing a dental restoration.

In step **531** a digital restoration design is created e.g. based on the shape data of a digital 3D representation of the patient's set of teeth and/or on template digital restoration design loaded from a library. Template digital restoration designs may e.g. be used when the tooth is broken.

In step **532** the tooth shade values of different points or regions of the teeth are derived from the texture data of the digital 3D representation of the patient's set of teeth. From the derived tooth shade values or from tooth shade profiles created based on the derived tooth shade values a desired shade profile for the dental restoration can be determined. This can be based on e.g. feature extraction where shade values are extracted from the other teeth by e.g. identifying shade zones on these teeth and copying these zones to the dental restoration. It can also be based on established shade rules for teeth, e.g. a rule describing a relation between the tooth shades values or profiles of the canines and the anterior teeth.

In step **533** the desired tooth shade value(s) for the dental restoration is merged into the digital restoration design.

When the dental restoration is to be drilled from a multicolored milling block it is important that the dental restoration is milled from the correct parts of the milling block. In step **534** a CAD model of the milling block is provided, where the CAD model comprises information of the shade profile of the milling block material. The optimal position of the digital restoration design relative to the CAD model of the milling block is then determined in **535**, where different criteria can be apply to provide the best fit between the desired shade profile and what actually can be obtained as dictated by the shade profile of the milling block.

In step **536** the dental restoration is manufactured from the milling block by removing milling block material until the dental restoration is shaped according to the digital restoration design.

FIG. **6** shows a schematic of a system for determining tooth shade values. The system **640** comprises a computer device **642** comprising a computer readable medium **643** and a processor **644**. The system further comprises a visual display unit **647**, a computer keyboard **645** and a computer mouse **646** for entering data and activating virtual buttons in a user interface visualized on the visual display unit **647**. The visual display unit can be a computer screen. The computer device **642** is capable of receiving a digital 3D representation of the patient's set of teeth from a scanning device **641**, such as the TRIOS intra-oral color scanner manufactured by 3 shape A/S, or capable of receiving scan data from such a scanning device and forming a digital 3D representation of the patient's set of teeth based on such scan data. The obtained digital 3D representation can be stored in the computer readable medium **643** and provided to the processor **644**. The processor is configured for implementing the method according to any of the embodiments. This may involve presenting one or more options to the operator, such as where to derive the tooth shade value and whether to accept a derived tooth shade value. The options can be presented in the user interface visualized on the visual display unit **647**.

Many scanning devices have Bayer color filters with Red, Green and Blue filters and hence record color information in the RGB color space. For instance a focus scanner can record series of 2D color images for the generation of sub-scans, where the color information is provided in the RGB color space. The processor **644** then comprises algorithms for transforming the recorded color data into e.g. the L*a*b or L*C*h color spaces.

The system may further comprise a unit **648** for transmitting a digital restoration design and a CAD model of a milling block to e.g. a computer aided manufacturing (CAM) device **649** for manufacturing a shaded dental restoration or to another computer system e.g. located at a milling center where the dental restoration is manufactured. The unit for transmitting the digital restoration design can be a wired or a wireless connection.

The scanning of the patient's set of teeth using the scanning device **641** can be performed at a dentist while deriving the tooth shade values can be performed at a dental laboratory. In such cases the digital 3D representation of the patient's set of teeth can be provided via an internet connection between the dentist and the dental laboratory.

FIGS. **7**A-**7**D and **8**A-**8**B show schematics of intra-oral scanning.

Different scanner configurations can be used to acquire sub-scans comprising both shape and texture information. In some scanner designs the scanner is mounted on axes with encoders which provides that the sub-scans acquired from different orientations can be combined using position and orientation readings from the encoders. When the scanner operates by the focus-scanning technique the individual sub-scans of the tooth are derived from a sequence of 2D images obtained while scanning a focus plane over a portion of the tooth. The focus scanning technique is described in detail in WO2010145669. The shape information of the sub-scans for an object, such as a tooth, can be combined by algorithms for stitching and registration as widely known in the literature. Texture data relating to the tooth color can be obtained using a scanner having a multi-chromatic light source, e.g. a white light source and a color image sensor. Color information from multiple sub-scans can be interpolated and averaged by methods such as texture weaving, or by simply averaging corresponding color components of the sub-scans corresponding to the same point/location on the surface. Texture weaving is described by e.g. Callieri M, Cignoni P, Scopigno R. "Reconstructing textured meshes from multiple range rgb maps". VMV 2002, Erlangen, Nov. 20-22, 2002.

In FIG. **7**A the scanner **741** (here represented by a cross-sectional view of the scanner tip) is held in one position relative to the teeth **711**, **760** (also represented by a cross-sectional view) while recording a sequence of 2D images for one sub-scan. The illustrated teeth can e.g. be the anterior teeth in the lower jaw. The size of the Field of View (here represented by the full line **761** on the teeth) of the scanner is determined by the light source, the optical components and the image sensor of the scanner. In the illustrated example, the Field of View **761** covers part of the surface of the tooth **711** and part of the surface of the neighbor tooth **760**. The generated digital 3D representation can thus also contain data for the neighbor teeth. This is often advantageous, e.g. when the generated digital 3D representation is used for creating a digital restoration design for the manufacture of a dental restoration for the tooth. In the Figure, the scanner is arranged such that the acquired sub-scan comprises shape and color information for the incisal edge **762** of the teeth. The probe light rays **763** from the scanner corresponding to the perimeter of the Field of View are also shown in the Figure. These probe light rays **763** define the optical path **764** of the scanner probe light at the tooth **711**.

A digital 3D representation of the tooth can be generated by combining sub-scans acquired from different orientations relative to the teeth, e.g. by sub-scan registration. Sub-scans acquired from three such different orientations are illustrated in FIGS. **7**B, **7**C and **7**D, where only the optical path **763** of the scanner probe light is used to represent the relative scanner/tooth orientation in FIGS. **7**C and **7**D. The sub-scans (here represented by the full line **765** on the teeth) covers different but overlapping sections of the tooth surface such that the sub-scans can be combined by registration into a common coordinate system using e.g. an Iterative Closest Point (ICP) algorithm as described above. A segment of each of the sub-scans corresponds to the point P on the tooth surface. When the sub-scans are registered to generate a digital 3D representation of the tooth, a correlation between these segments is established and the texture information of these sub-scan segments can be combined to determine the texture data for point P on the generated digital 3D representation of the tooth.

One way of doing this is to calculate the average value for each of the parameters used to describe the texture. For example, when the L*a*b* color system is used to describe the color information provided in each sub-scan, the color data of the digital 3D representation can be derived by averaging over each of the L*, a*, and b* parameters of the sub-scans. For example, the L* parameter of the color data for a given point P is then given by

$$L^*(P) = \frac{1}{N}\sum_{i}^{N} L_i^*(P)$$

where N is the number of sub-scans used in deriving the texture data and $L_i^*(P)$ is the L* parameter of the i'th

sub-scan for the segment relating to P. Equivalent expressions are true for the a* and b* parameters for point P. The color parameters for each point on the digital 3D representation of the tooth can be determined for sections of or the entire surface of the tooth, such that the generated digital 3D representation comprises both shape and texture information about the tooth. The spatial resolution of the color data does not necessarily have to be identical to the resolution of the shape data of the digital 3D representation. The point P can be described e.g. in Cartesian, cylindrical or polar coordinates.

When the color data is derived for a point on the tooth, the tooth shade value for that point can be determined by comparing the derived color data with the known color data of the reference tooth shade values of a tooth shade guide such as the VITA 3D-Master.

FIG. **8**A-**8**B illustrates some potentially problematic tooth surface areas for particular arrangements of the scanner **841** relative to the tooth **811**.

FIG. **8**A shows two points P_i and P_{ii} on the tooth **811** where the tooth surface is either substantially perpendicular or parallel to the optical path, such that the texture information recorded at P_i and P_{ii} may be unreliable. This is because the tooth surface at P_i is perpendicular to the optical path **864***i* at point P_i which introduces the risk of having specular reflections of the probe light. The optical path **864***ii* at point P_{ii} is parallel to the tooth surface at P_{ii} such that the signal recorded from this part of the tooth surface in this sub-scan is relatively weak. This may cause that the color information in this section of the sub-scan are unreliable.

In order to obtain more precise color data the averaging of the color information described above in relation to FIG. **7** can be a weighted averaging where the color information of unreliable sub-scans segments are assigned a lower weight than others.

In FIG. **8**B is indicated three different optical paths **864***i*, **864***ii* and **864***iii* at which sub-scans are acquired. When combining the color information for point P the color information of the segments of the sub-scans recorded with optical paths **864***i* and **864***ii* should be given a lower weight that the color information of the segment of the sub-scan recorded with the optical path **864***iii*.

This can be expressed by a modification of the equation given above. For a weighted averaging of the color information, the L* parameter of the color data for a given point P is given by $L^*(P)=\Sigma_i^N\{\alpha_i(P)\cdot L_i^*(P)\}/\Sigma_i^N\alpha_i$ where $\alpha_i(P)$ is the weight factor for the color information of the i'th sub-scan in the segment at P. When a given sub-scan (e.g. the j'th sub-scan) is recorded at an angle relative to the tooth surface which causes the optical path to be e.g. perpendicular to the tooth surface at P, the corresponding weight factor $\alpha_i(P)$ is given a lower value than the color data of sub-scans acquired with an oblique angle between the optical path and the tooth surface.

Equivalent equations are true for the a* and b* parameters of the color data for point P.

FIG. **9**A=**9**B illustrates how a tooth shade value for a point P on a tooth can be determined based on reference tooth shade values.

For a given point P on the digital 3D representation, the color data (L_p^*, a_p^*, b_p^*) has been determined, e.g. by combining the color information of a series of sub-scans used for generating the digital 3D representation. If the color information originally is recorded using the RGB color space it is transformed into the L*a*b* color space using algorithms known to the skilled person.

In the example illustrated by FIG. **9**A, the color data of the digital 3D representation and the known color values of the reference tooth shades are expressed in the L*a*b* color space, and the reference tooth shades are those from the VITA classical shade guide.

The reference shade values of the Vita classical shade guide are: B1, A1, B2, D2, A2, C1, C2, D4, A3, D3, B3, A3.5, B4, C3, A4, and C4. The color data of these reference shades can be provided by scanning the corresponding pre-manufactured teeth of the shade guide. These color data are then also initially obtained in the RGB color space and can be converted to the L*a*b color space using the same algorithms applied to the color information/data for the point P.

The tooth shade value for the point is determined as the reference tooth shade value which has the smallest Euclidian distance to the point in the L*a*b color space. The Euclidian distance ΔE_{P-Ri} from the color (L_p^*, a_p^*, b_p^*) to the known colors of the reference tooth shade values are calculated using the expression:

$$\Delta E_{P-Ri} = \sqrt[2]{(L_P^* - L_{Ri}^*)^2 + (a_P^* - a_{Ri}^*)^2 + (b_P^* - b_{Ri}^*)^2}$$

where Ri refers to the i'th reference tooth shade.

In FIG. **9**A only the known colors (L_{R1}^*, a_{R1}^*, b_{R1}^*) and (L_{R2}^*, a_{R2}^*, b_{R2}^*) for the two closest reference values R**1** and R**2**, respectively, are illustrated for simplicity. It can be seen that the Euclidian distance in the color space from P to R**2** is the smallest, and the tooth shade in point P is hence selected as that of R**2**.

The certainty score for the tooth shade value determined for point P depends on how close the color data of the point P is to the known color value of the selected reference tooth shade value. This can be quantified by the Euclidian distance and since point P is not particularly close to R**2** in FIG. **9**A the determined tooth shade has a poor certainty value.

An alternative approach to using the Euclidian distance is to determine individual parameters of the tooth shade value one at a time. This approach can be used e.g. when the reference tooth shades values are those of the Vita 3D-master system.

The reference tooth shade values of the Vita 3D-master shade guide are expressed in codes consisting of the three parameters Lightness-hue-Chroma, where Lightness is given in values between 1 and 5, the Chroma in values between 1 and 3, and the hue as one of "L", "M", or "R". A shade code in the Vita 3D-master can e.g. be 2M1, where the Lightness parameter equals 2, the Chroma 1 and the hue "M".

The known color data of the VITA 3D-master shade guide reference shades can be provided by scanning the pre-manufactured teeth of the shade guide. These color data are then also initially obtained in the RGB color space and can be converted to the L*a*b color space using the same algorithms applied to the color information/data for the point P. The known color data of each reference shade guide (having a code expressed in terms of Lightness, hue and Chroma) is then provided in terms of the L*a*b color space.

Since the lightness L has the largest impact on the human perception of the tooth color, the value of the Lightness-parameter L_P^* in the point is determined first. The value of L_P^* is compared with the values of the L* parameters for the reference tooth shades. If L_P^* is close to the L*-value for the i'th reference tooth shade value, L_{Ri}^* the L* parameter for point P may be set equal to L_{Ri}^*.

In some cases the Lightness parameter is not close to any of the references but instead is located almost in the middle between two L*-values. For example when L_P* in the point is between the values of L_{Ri}*=2 and L_{Ri+1}*=3 with almost equal distance to each of these as illustrated in FIG. 9B. Since the L*a*b color space is a linear space, the individual parameters of the shade values can be interpolated such that the Lightness for point P, L_P*, can be set to 2.5.

The same procedure is performed for first the Chroma parameter and finally for the hue such that the three parameter of the tooth shade value are determined.

Although some embodiments have been described and shown in detail, the invention is not restricted to them, but may also be embodied in other ways within the scope of the subject matter defined in the following claims. In particular, it is to be understood that other embodiments may be utilized and structural and functional modifications may be made without departing from the scope of the present invention.

In device claims enumerating several means, several of these means can be embodied by one and the same item of hardware. The mere fact that certain measures are recited in mutually different dependent claims or described in different embodiments does not indicate that a combination of these measures cannot be used to advantage.

A claim may refer to any of the preceding claims, and "any" is understood to mean "any one or more" of the preceding claims.

It should be emphasized that the term "comprises/comprising" when used in this specification is taken to specify the presence of stated features, integers, steps or components but does not preclude the presence or addition of one or more other features, integers, steps, components or groups thereof.

The features of the method described above and in the following may be implemented in software and carried out on a data processing system or other processing means caused by the execution of computer-executable instructions. The instructions may be program code means loaded in a memory, such as a RAM, from a storage medium or from another computer via a computer network. Alternatively, the described features may be implemented by hard-wired circuitry instead of software or in combination with software.

REFERENCES

Hassel 2012: Hassel et al. "Determination of VITA Classical shades with the 3D-Master shade guide" Acta Odontol Scand. 2013; 71(3-4): 721-6.

Dozic 2007: Dozic et al. "Performance of five commercially available tooth color-measuring devices", J Prosthodont. 2007; 16(2): 93-100.

Embodiments

1. A method for determining shade of a patient's tooth, wherein the method comprises:
   - obtaining a digital 3D representation of the tooth, where the digital 3D representation comprises shape data and texture data for the tooth; and
   - determining a tooth shade value for at least one point on the tooth based on the texture data of the corresponding point of the digital 3D representation and on known texture values of one or more reference tooth shade values.

2. The method according to embodiment 1, wherein determining the tooth shade value for the point comprises selecting the reference tooth shade value with the known texture value closest to the texture data of the point.

3. The method according to embodiment 1 or 2, wherein determining the tooth shade value for the point comprises an interpolation of the two or more reference tooth shade values having known texture values close to the texture data of the point.

4. The method according to any one of the preceding embodiments, wherein the method comprises deriving a certainty score expressing the certainty of the determined tooth shade value.

5. The method according to embodiment 4, wherein the method comprises generating a visual representation of the certainty score and displaying this visual representation in a user interface.

6. The method according to embodiment 5, wherein the visual representation of the certainty score is displayed together with or is mapped onto the digital 3D representation of the tooth.

7. The method according to any one of embodiments 4 to 6, wherein the method comprises comparing the derived certainty score with a range of acceptable certainty score values.

8. The method according to any one of embodiments 4 to 7, wherein the certainty measure relates to how uniform the sub-scan texture information is at the point, and/or to how close the texture data is to the known texture value of the determined tooth shade value, and/or to the amount of texture information used to derive the texture data at the point.

9. The method according to any one of embodiments 4 to 8, wherein the visual representation of the certainty score comprises a binary code, a bar structure with a color gradient, a numerical value, and/or a comparison between the texture data and the known texture value of the determined tooth shade value.

10. The method according to any one of the preceding embodiments, wherein the one or more reference tooth shade values relate to shade values for natural teeth with intact surface and/or to shade values for teeth prepared for a dental restoration.

11. The method according to any one of the preceding embodiments, wherein the method comprises comparing the texture data with known texture values for soft oral tissue, such as gum tissue and gingiva.

12. The method according to any of the previous embodiments, wherein the texture information comprises at least one of tooth color or surface roughness.

13. The method according to any one of the preceding embodiments, wherein the method comprises creating a shade profile for the tooth from shade values determined one or more points on the tooth.

14. The method according to embodiment 13, wherein the tooth shade profile comprises a one or more tooth shade regions on the tooth surface where an average tooth shade is derived for each region from tooth shade values determined for a number of points within the region

15. The method according to any of the previous embodiments, wherein obtaining the digital 3D representation of the tooth comprises recording a series of sub-scans of the tooth, where at least one of said sub-scans comprises both texture information and geometry information for said tooth, and generating the digital 3D representation of the tooth from the recorded series of sub-scans.

16. The method according to embodiment 15, wherein the texture data at least partly are derived by combining the texture information from corresponding parts of a number of the sub-scans.

17. The method according to embodiment 16, wherein combining the texture information from the sub-scans comprises interpolating the texture information and/or calculating an average value of the texture information.

18. The method according to embodiment 17, wherein the calculated average value is a weighted average of the texture information.

19. A user interface for determining and displaying shade of a patient's tooth, wherein the user interface is configured for:

obtaining a digital 3D representation of the tooth, said digital 3D representation comprising shape data and texture data for the tooth;

displaying at least the shape data of the digital 3D representation such that the shape of the tooth is visualized in the user interface;

determining a tooth shade value for at least one point on the tooth based on the texture data of the corresponding point of the digital 3D representation and on known texture values of one or more reference tooth shade values; and

displaying the determined tooth shade value.

The invention claimed is:

1. A method for determining shade of a patient's tooth, wherein the method comprises:

obtaining a digital 3D representation of the tooth, where the digital 3D representation comprises shape data and texture data for the tooth; and

determining a tooth shade value for at least one point on the tooth based on the texture data of the corresponding point of the digital 3D representation and on known texture values of one or more reference tooth shade values,

wherein the method comprises deriving a certainty score expressing the certainty of the determined tooth shade value.

2. The method according to claim **1**, wherein determining the tooth shade value for the point comprises selecting the reference tooth shade value with the known texture value closest to the texture data of the point.

3. The method according to claim **1**, wherein determining the tooth shade value for the point comprises an interpolation of the two or more reference tooth shade values having known texture values close to the texture data of the point.

4. The method according to claim **1** wherein the method comprises generating a visual representation of the certainty score and displaying this visual representation in a user interface.

5. The method according to claim **4**, wherein the visual representation of the certainty score is displayed together with or is mapped onto the digital 3D representation of the tooth.

6. The method according to claim **1**, wherein the method comprises comparing the derived certainty score with a range of acceptable certainty score values.

7. The method according to claim **1**, wherein the certainty measure relates to how uniform the sub-scan texture information is at the point, and/or to how close the texture data is to the known texture value of the determined tooth shade value, and/or to the amount of texture information used to derive the texture data at the point.

8. The method according to claim **1**, wherein the visual representation of the certainty score comprises a binary code, a bar structure with a color gradient, a numerical value, and/or a comparison between the texture data and the known texture value of the determined tooth shade value.

9. The method according to claim **1**, wherein the one or more reference tooth shade values relate to shade values for natural teeth with intact surface and/or to shade values for teeth prepared for a dental restoration.

10. The method according to claim **1**, wherein the method comprises comparing the texture data with known texture values for soft oral tissue, such as gum tissue and gingiva.

11. The method according to claim **1**, wherein the texture information comprises at least one of tooth color or surface roughness.

12. The method according to claim **1**, wherein the method comprises creating a shade profile for the tooth from shade values determined one or more points on the tooth.

13. A method for determining shade of a patient's tooth, wherein the method comprises:

obtaining a digital 3D representation of the tooth, where the digital 3D representation comprises shape data and texture data for the tooth; and

determining a tooth shade value for at least one point on the tooth based on the texture data of the corresponding point of the digital 3D representation and on known texture values of one or more reference tooth shade values,

wherein the method comprises creating a shade profile for the tooth from shade values determined one or more points on the tooth,

wherein the tooth shade profile comprises a one or more tooth shade regions on the tooth surface where an average tooth shade is derived for each region from tooth shade values determined for a number of points within the region.

14. A method for determining shade of a patient's tooth, wherein the method comprises:

obtaining a digital 3D representation of the tooth, where the digital 3D representation comprises shape data and texture data for the tooth; and

determining a tooth shade value for at least one point on the tooth based on the texture data of the corresponding point of the digital 3D representation and on known texture values of one or more reference tooth shade values,

wherein obtaining the digital 3D representation of the tooth comprises recording a series of sub-scans of the tooth, where at least one of said sub-scans comprises both texture information and geometry information for said tooth, and generating the digital 3D representation of the tooth from the recorded series of sub-scans.

15. The method according to claim **14**, wherein the texture data at least partly are derived by combining the texture information from corresponding parts of a number of the sub-scans.

16. The method according to claim **15**, wherein combining the texture information from the sub-scans comprises interpolating the texture information and/or calculating an average value of the texture information.

17. The method according to claim **16**, wherein the calculated average value is a weighted average of the texture information.

* * * * *