US 20110188086A1

(19) United States

(12) Patent Application Publication

Lehmann

(10) Pub. No.: US 2011/0188086 A1

(43) Pub. Date: Aug. 4, 2011

(54) **TOOTH SHADE ANALYZER SYSTEM AND METHODS**

(75) Inventor: **Maryann Lehmann**, Darien, CT (US)

(73) Assignee: **Shade Analyzing Technologies, Inc.**

(21) Appl. No.: **13/084,084**

(22) Filed: **Apr. 11, 2011**

Related U.S. Application Data

(63) Continuation of application No. 12/128,358, filed on May 28, 2008, now Pat. No. 7,946,845, which is a continuation of application No. 11/008,514, filed on Dec. 9, 2004, now Pat. No. 7,393,209, which is a continuation of application No. 10/407,165, filed on Apr. 7, 2003, now Pat. No. 6,832,913, which is a continuation of application No. 10/057,663, filed on Jan. 25, 2002, now Pat. No. 6,561,800, which is a continuation of application No. 09/918,147, filed on Jul. 30, 2001, now Pat. No. 6,358,047, which is a continuation of application No. 09/688,542, filed on Oct. 16, 2000, now Pat. No. 6,305,933, which is a continuation of application No. 09/385,615, filed on Aug. 30, 1999, now Pat. No. 6,132,210, which is a continuation of application No. 09/082,030, filed on May 20, 1998, now Pat. No. 5,961,324, which is a continuation-in-part of application No. 08/494,979, filed on Jun. 26, 1995, now Pat. No. 5,766,006.

Publication Classification

(51) **Int. Cl.**

G06K 15/02	(2006.01)
A61C 19/10	(2006.01)
H04N 7/18	(2006.01)

(52) **U.S. Cl.** **358/1.18**; 433/26; 348/66; 348/E07.085

(57) **ABSTRACT**

The invention relates to a non-transitory computer readable medium that includes one or more programs for carrying out a method for addressing a dental need in a patient involving modification of tooth shape, alignment, or color. The method includes the steps of receiving an electronic image of a patient's tooth; storing the image electronically in memory storage; and communicating the image to a party for evaluation of the modification of tooth shape, alignment, or color in connection with the addressing of the patient's dental need.

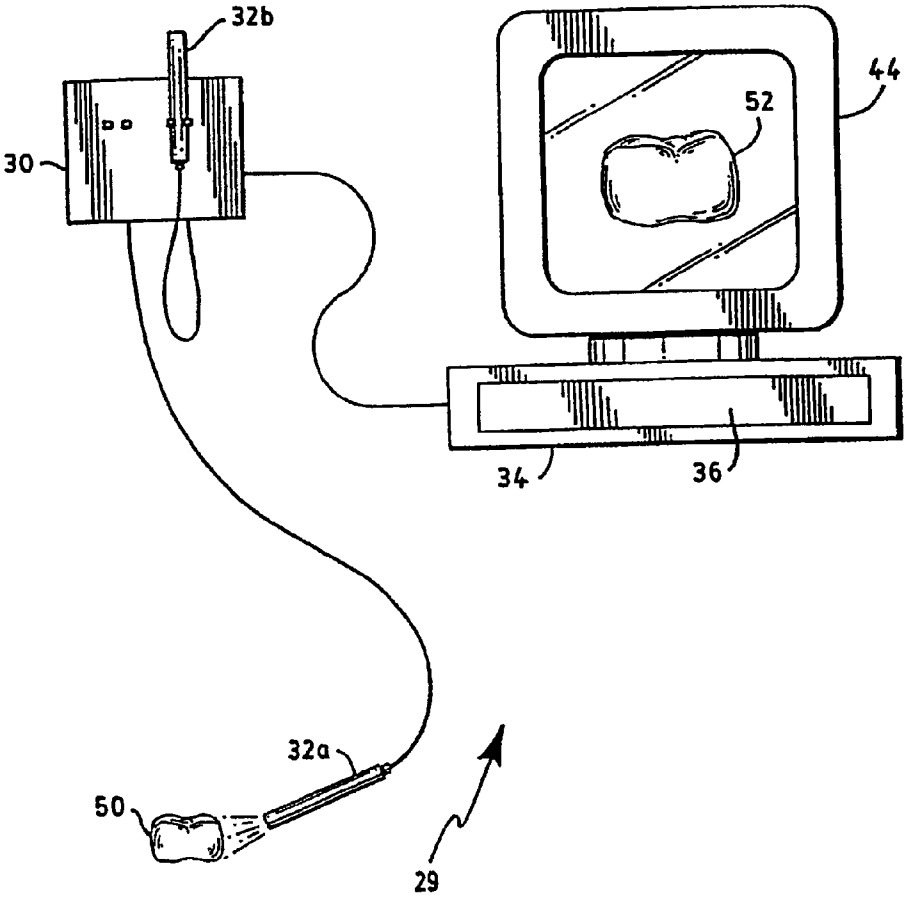

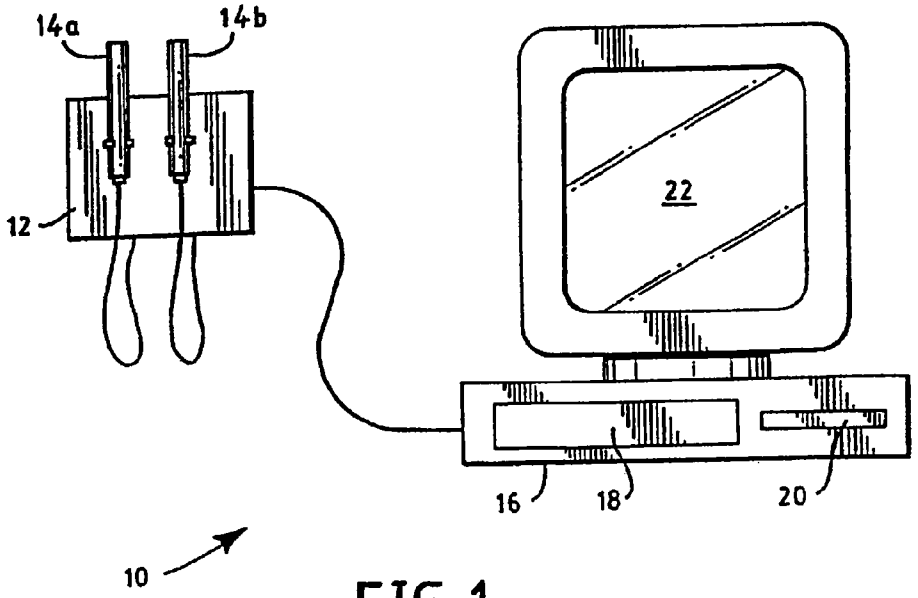

FIG. 1 (PRIOR ART)

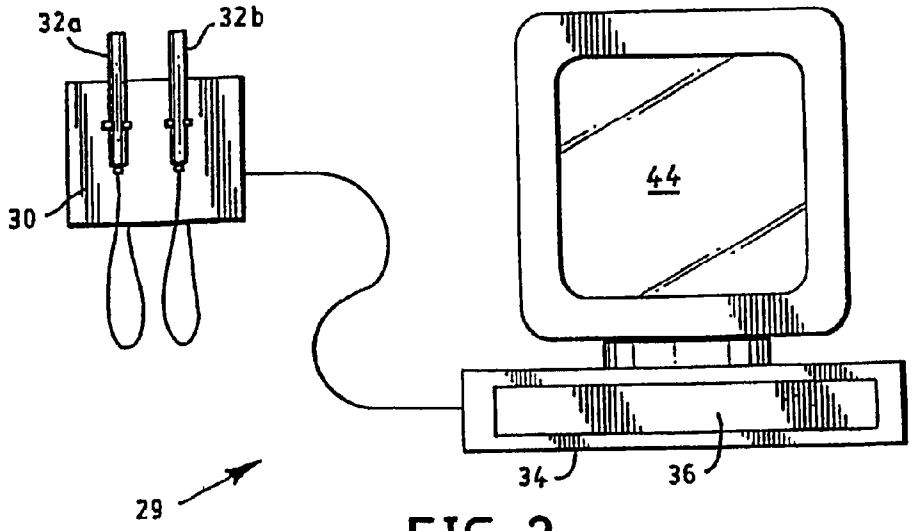

FIG. 2

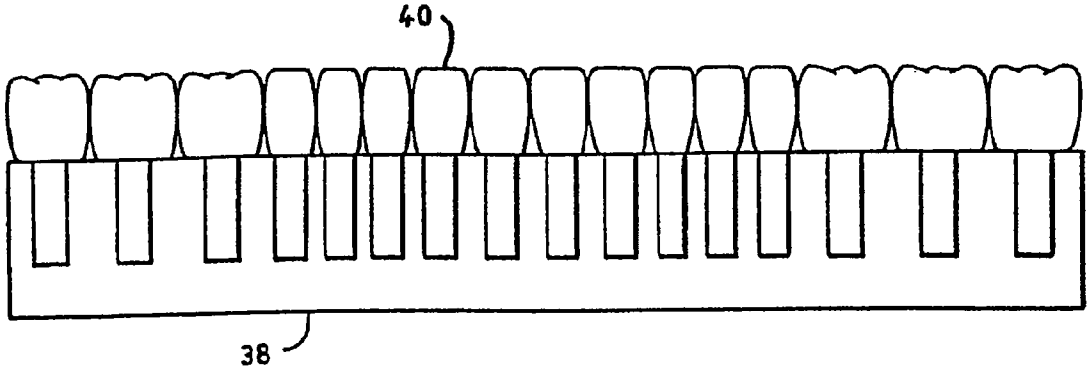

FIG. 3 (PRIOR ART)

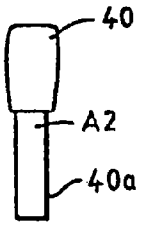

FIG. 3A (PRIOR ART)

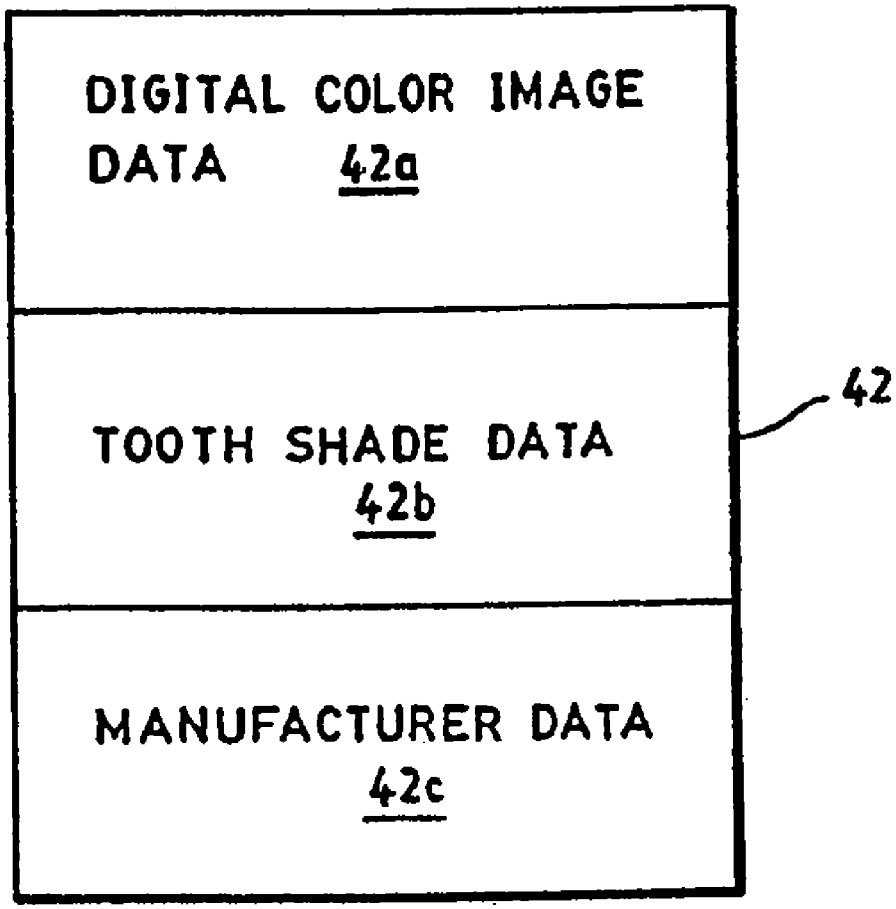
DIGITAL COLOR IMAGE DATA 42a
TOOTH SHADE DATA 42b
MANUFACTURER DATA 42c
42

FIG. 4

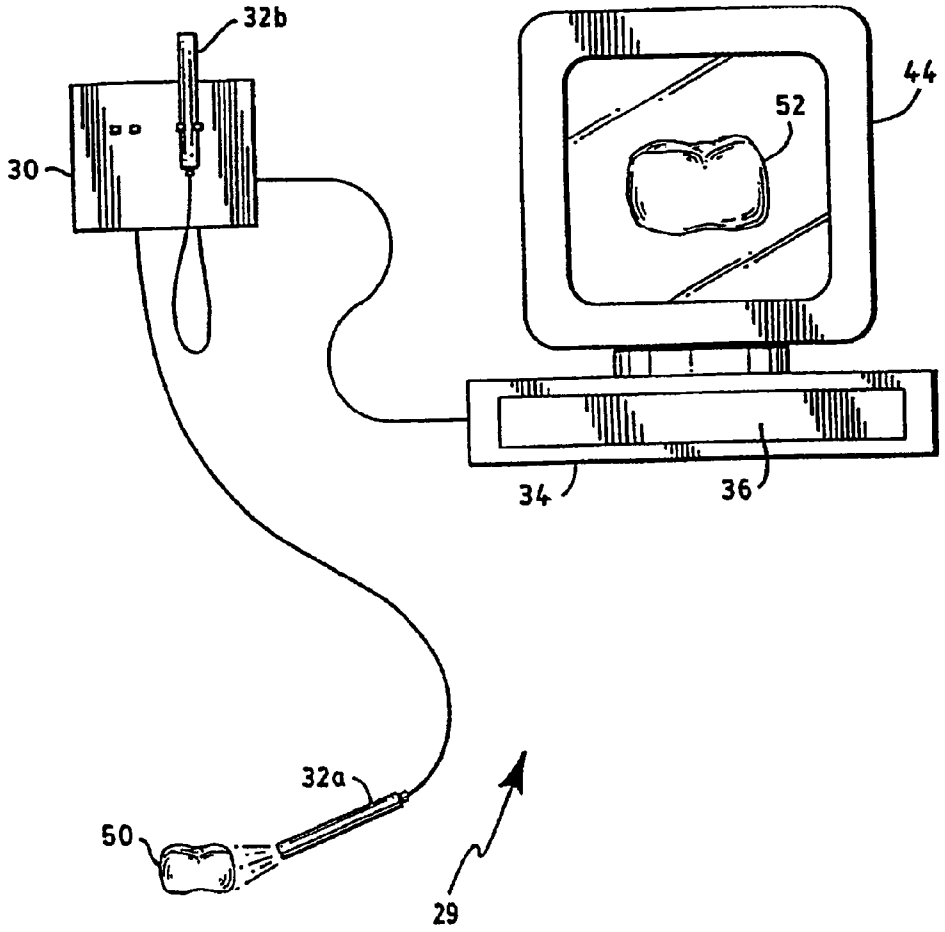

FIG. 5

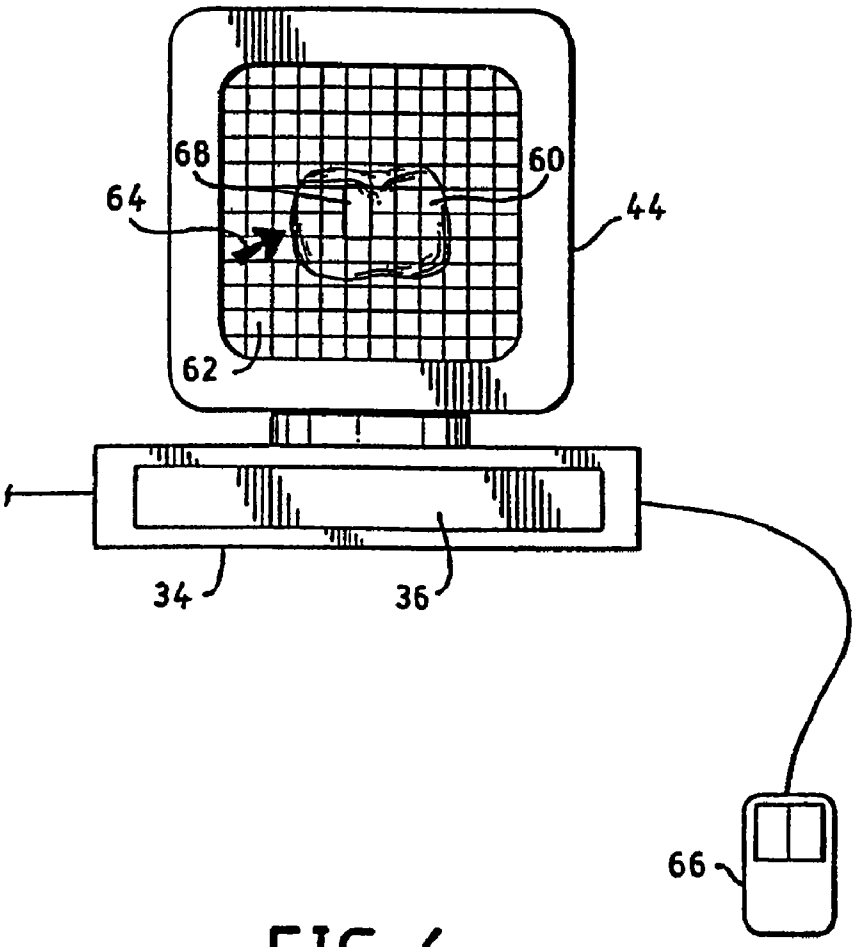

FIG. 6

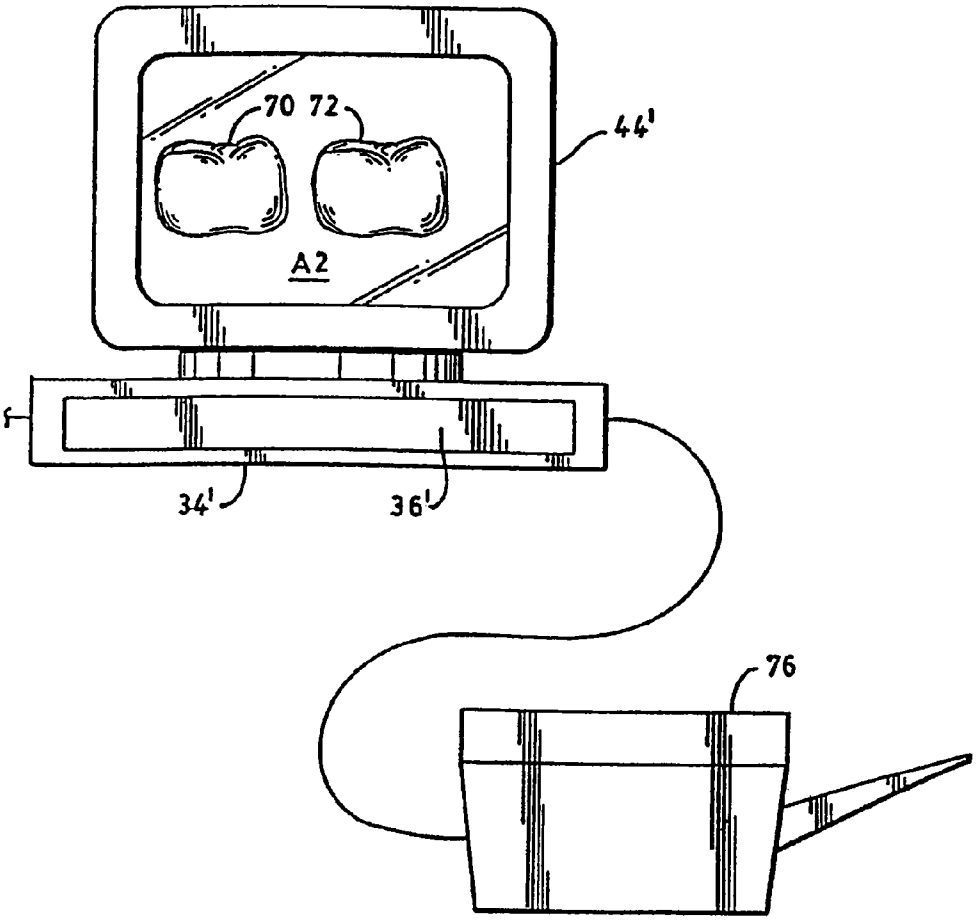

FIG. 7

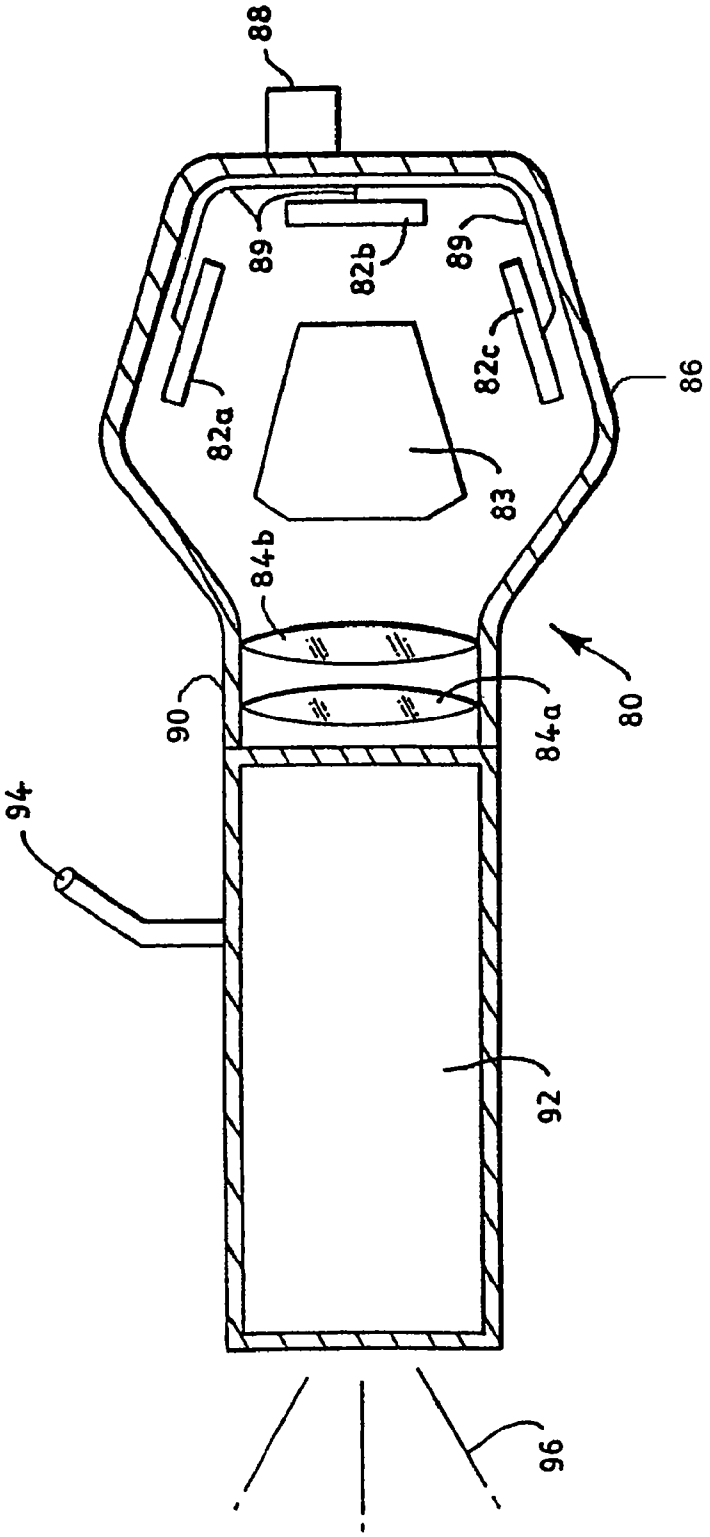

FIG. 8

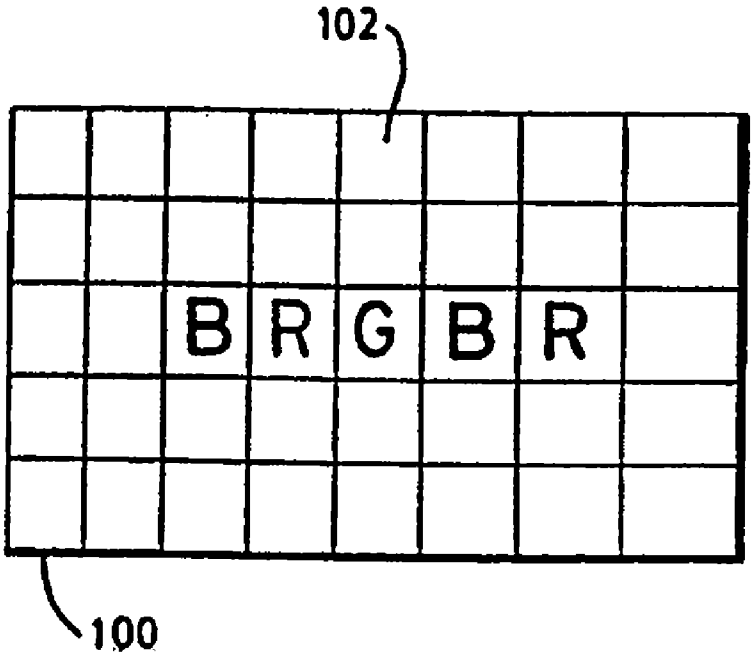

FIG. 9

FIG. 10

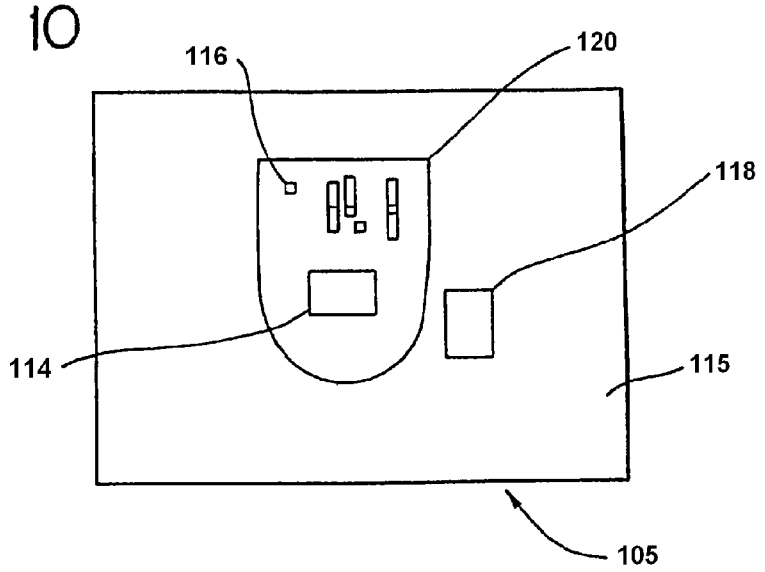

FIG. 12

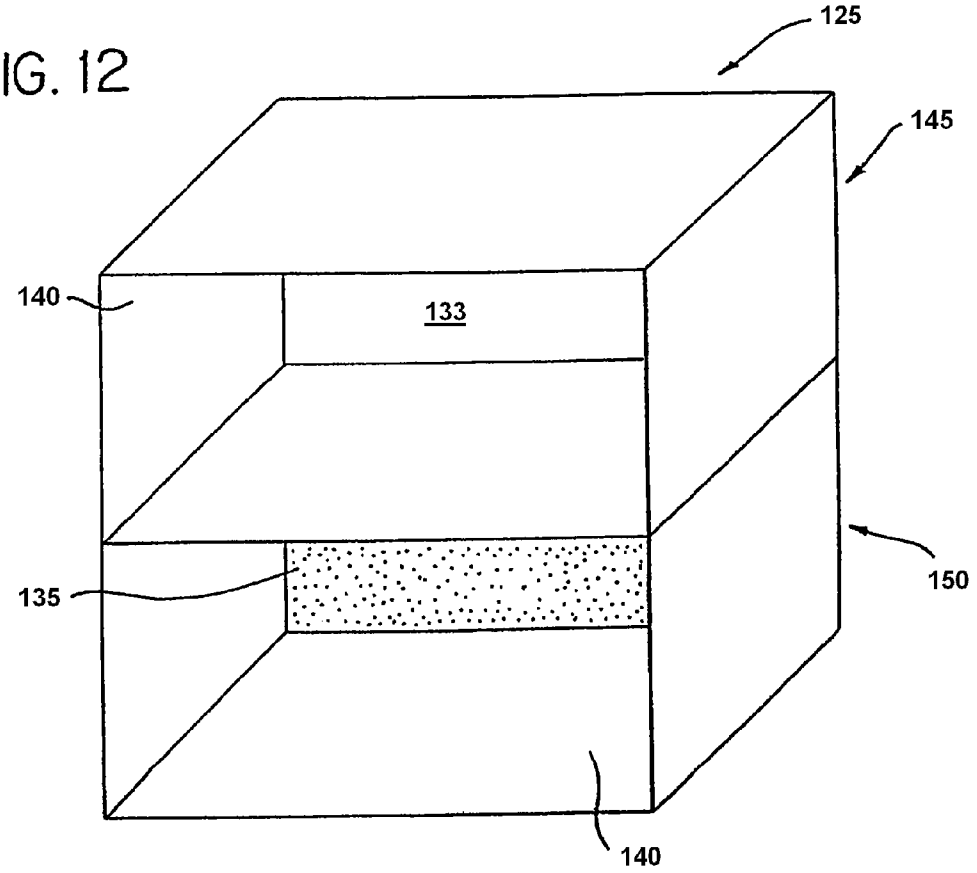

FIG. 11

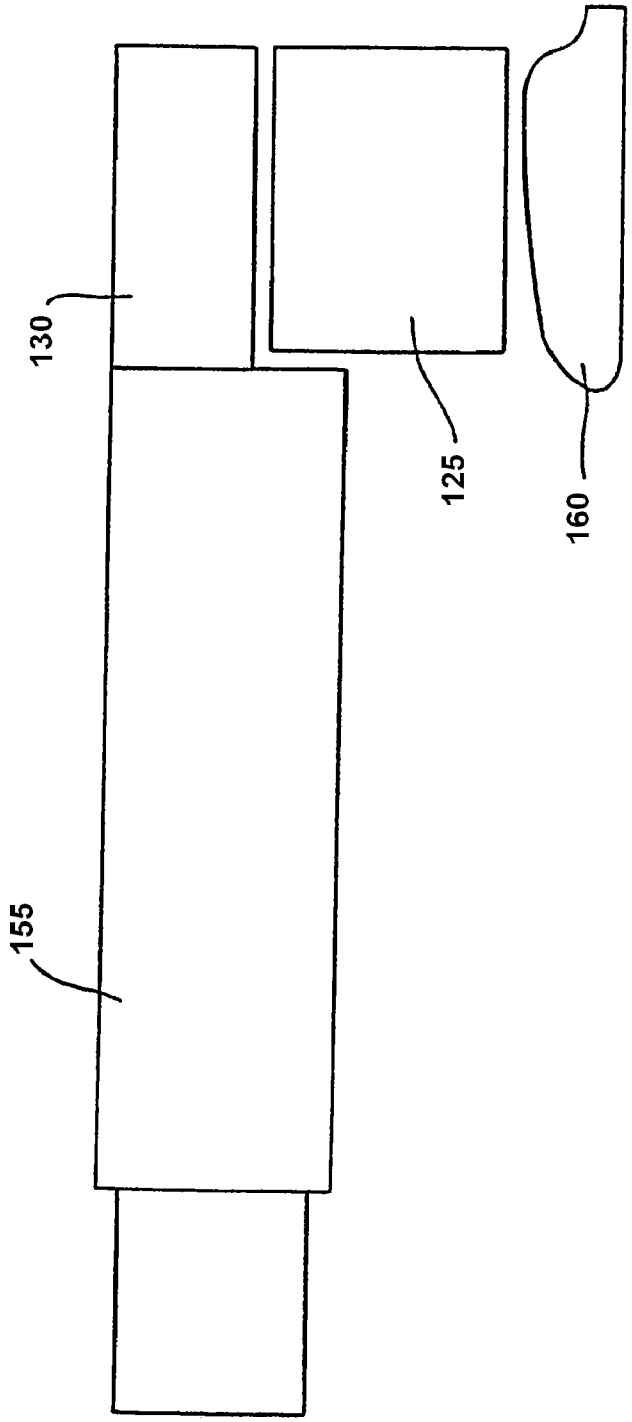

TOOTH SHADE ANALYZER SYSTEM AND METHODS

CROSS-REFERENCE TO RELATED APPLICATIONS

[0001] This application is a continuation of application Ser. No. 12/128,358 filed May 28, 2008, which is a continuation of application Ser. No. 11/008,514 filed Dec. 9, 2004, now U.S. Pat. No. 7,393,209, which is a continuation of application Ser. No. 10/407,165 filed Apr. 7, 2003, now U.S. Pat. No. 6,832,913, which is a continuation of application Ser. No. 10/057,663 filed Jan. 25, 2002, now U.S. Pat. No. 6,561,800, which is a continuation of application Ser. No. 09/918,147 filed Jul. 30, 2001, now U.S. Pat. No. 6,358,047, which is a continuation of application Ser. No. 09/688,542 filed Oct. 16, 2000, now U.S. Pat. No. 6,305,933, which is a continuation of application Ser. No. 09/385,615 filed Aug. 30, 1999, now U.S. Pat. No. 6,132,210, which is a continuation of application Ser. No. 09/082,030, filed May 20, 1998, now U.S. Pat. No. 5,961,324, which is a continuation-in-part of application Ser. No. 08/494,979, filed Jun. 26, 1995, now U.S. Pat. No. 5,766,006.

BACKGROUND ART

[0002] In dentistry, there has been a shift in recent years from a philosophy of drilling and filling to one of prevention and cosmetics. By way of example, many people today are choosing to have clinical procedures done to enhance their smile and appearance. Most of these procedures involve the modification of tooth shape, alignment, and/or color.

[0003] The use of intraoral video and/or imaging systems (hereinafter "intraoral camera system") has grown rapidly in dentistry over the past few years. Such systems are widely utilized in "show and tell" settings, i.e., where the dentist can show and illustrate particular features of a patient's mouth. These intraoral camera systems are rapidly becoming key complex diagnostic and treatment planning. Presently, approximately 30% of the practicing dentists in the age group between about 35-54 own and utilize intraoral camera systems. It is expected that that percentage will only increase with increased familiarity. See *Dental Procedures Report*, pgs. 22-24, February 1995.

[0004] A necessary step in altering a patient's tooth color is to determine the "shade" of the existing tooth. For example, those persons seeking a whiter, brighter smile are still assessed to establish their existing tooth color so that an appropriate before and after comparison can be made. Shade determination is even more important for those persons seeking reconstructive work, since one goal of the reconstructive process is to achieve a natural appearance. Therefore, it is important to know the existing tooth shade so that it can be accurately matched with the new restoration.

[0005] The dental profession utilizes standardized shade guides created by those companies which manufacture the reconstructive materials. One well-known shade guide is the Vita™ shade guide, which includes sixteen different shades. Other, less popular shade guides include those guides provided by Bioform™ and SR-Vivadent™

[0006] These shade guides are utilized in a rudimentary fashion. The guide itself is a plastic plate with a plurality of removable color tabs that are shaped like a tooth, e.g., the front tooth. Typically, to assess a patient's tooth shade, a dentist removes one of the colored tabs and holds it up to the patient's tooth so that she can "eyeball" the closest match possible. Understandably, there are many variables to this method, some of which stem from the subjectivity of the dentist making the eyeball assessment.

[0007] Once the tooth shade is determined, the information is used relative to the particular procedure needed. In bonding or filling a tooth, for example, the composite materials required for the restoration are specified within the range of the shade guide, e.g., one of sixteen shades for the Vita™ range. More particularly, if a crown, bridge or denture is needed, the patient's shade must be determined and communicated correctly to the lab that make the crown, bridge or denture.

[0008] The communication of shade information between the dentist and the lab is extremely important. Often, there is a break-down or failure in this communication, resulting in a poor shade match for the patient. In some cases, a particular dentist utilizes an uncommon shade guide, thereby leaving the lab technician to eyeball and convert the shade information to a Vita standard shade (since porcelain is often made from the Vita™ shade guide). This too can result in improper shade matching.

[0009] The process for selecting the porcelain for a particular tooth shade illustrates the difficulty in assessing and manufacturing the correct color match. If, for example, a crown of Vita™ shade A3 is desired, porcelain is built by hand with a paint brush onto a model of the tooth to be restored. The porcelain is built in layers on the model to achieve translucency and natural appearance. Each layer has a particular color and intensity associated with it. To generate shade A3, the technician follows a "recipe" that is given by the manufacturer Vident™, requiring a different shade for each layer of porcelain applied. If a doctor asks for a shade that is not a Vita™ standard shade, the technician typically seeks to achieve that shade by combining different porcelain shade combinations together, to increase or decrease the chroma, hue and value of the shade.

[0010] To further complicate the color-matching process, some dentists are simply not skilled in taking and determining shade information. Therefore, these dentists sometimes send their patients directly to the lab where the technician can determine the shade information. Alternatively, these dentists sometimes have a technician come to their office. In either event, there is, at times, one more level of subjective uncertainty injected into the correct match and determination of a patient's tooth shade. Thus, there is a need for more improvements in this area.

SUMMARY OF THE INVENTION

[0011] The invention relates to a method for determining a patient's tooth shade comprising the steps of electronically imaging a patient's tooth to obtain an image which includes color information representative of tooth color; determining the patient's tooth color from the color information of the image; and displaying the determined tooth color to identify one or more tooth shades having a combined color corresponding to the determined tooth color.

[0012] Preferably, the displayed data includes RGB chromaticities of the color image, and the patient's tooth color is determined by averaging the color information at selected locations of the image which correspond to different spatial locations of the patient's tooth. If desired, the color information of the patient's tooth can be electronically stored for use at a later time.

[0013] The identification of tooth shade(s) is generally made by comparing the determined tooth color to a plurality of electronically stored tooth shades. If desired, both the identified tooth shade(s) and the color information of the image of the patient's tooth can be electronically displayed to enable a visual comparison to be made therebetween. Preferably, information which includes the identified tooth shade(s) can be communicated to a laboratory for use in manufacturing a reconstructed tooth for the patient. This is typically done by painting one or more porcelain layers onto a model of the patient's tooth, each of the layers of porcelain corresponding to the identified tooth shade(s) or a color fraction thereof.

[0014] For optimum results, either the patient's tooth or a tooth shade is imaged at a controlled, reproducible distance, and a reference color to assist in determining the patient's tooth color from the color information of the image. Also, the patient's teeth are cosmetically whitened before conducting the electronic imaging step.

[0015] Another aspect of the present invention relates to a method of determining a tooth shade of at least a portion of a patient's tooth which is to be replaced or restored, by capturing an electronic image of the patient's tooth, the image including color information representative of the patient's tooth shade; storing color information representative of known tooth shades with each known tooth shade representing a different tooth color; calibrating the color information of the patient's tooth and the color information representative of known tooth shades; and comparing the color information of the patient's tooth with the stored color information to identify a single tooth shade or a combination of tooth shades with a color or combined color corresponding to the color of at least a portion of the patient's tooth, such that the patient's tooth may be comprised of a single tooth shade or a plurality of tooth shades.

[0016] In this method, the calibrating is preferably achieved by storing color information representative of the tooth shades that are captured with the same device or with a device calibrated within an acceptable margin as the device which captures the electronic images of the patient's tooth. Advantageously, the electronic image is captured by an intraoral videocamera or an intraoral CCD camera. Also, the method further comprises integrating at least a portion of the tooth to determine an average color over that portion of the tooth by combining color fractions of tooth shades.

[0017] In a preferred embodiment the method further comprises displaying the color information of the tooth and that which is representative of the tooth shades on a monitor for visual comparison. For simplicity and greater accuracy, the color information of the patient's tooth is compared with the stored color information relating to the tooth shades by a computer. The color information of the patient's tooth may be compared to the plurality of tooth shade guides on a pixel-by-pixel basis.

[0018] In order to optimize the color comparison step, one of the patient's tooth or a tooth shade or both can be imaged at a controlled, reproducible distance. The step of isolating the patient's tooth from stray light can be used to enhance the image. Also, a reference color can be provided to assist in determining the patient's tooth color from the color information of the image. When used, it is helpful to surround the patient's tooth with the reference color before the imaging step. Often, the patient's tooth is cosmetically whitened before conducting the electronic imaging step.

[0019] The invention also relates to a system for determining the tooth shade of a patient's tooth, comprising a camera for capturing an image of the patient's tooth, the image including color information representative of tooth color; and a shade analyzer sub-system which electrically communicates with the camera. The shade analyzer typically includes a color processor for determining the color of the patient's tooth from the color information of the image; and a color correlation section for evaluating the color of the patient's tooth and for identifying a tooth shade having a color corresponding to the color of the patient's tooth.

[0020] Preferably, the system further comprises an electronic storage medium for storing shade information representative of a plurality of tooth shades, each tooth shade corresponding to a different tooth color.

[0021] The camera is preferably a color CCD camera comprising an array including a plurality of proximately located pixels. Generally, the camera comprises three CCD arrays, each of the arrays collecting image data corresponding to red, green or blue, and the sub-system further comprises a section for integrating at least a portion of the tooth to determine an average color over that portion of the tooth by combining color fractions of known tooth shades. Thus, the color correlation section should include sufficient memory for associating the color of the patient's tooth with one or more known tooth shades.

[0022] Advantageously, the system further comprises a monitor for simultaneously displaying color information of the tooth and tooth shade information so that visual comparisons can be made. Also, a printer can be used for printing the color information displayed on the monitor for communicating this information to a laboratory for reconstruction of the patient's tooth.

[0023] The color processor preferably includes electronic circuitry which determines RGB chromaticities of the color image, each of the plurality of tooth shades has a corresponding RBG representation of the tooth color, and the electronic circuitry quantitatively compares the RGB chromaticities with the RGB representation of each of the tooth shades, thus comparing or identifying a tooth shade based upon a comparison of the chromaticities and the RGB representations. For optimum results, the system further comprises a sample box (or isolation sleeve) for isolating the tooth from stray light. This isolation sleeve preferably includes a first compartment that contains a reference color and a second compartment for receiving the patient's tooth or a reference shade. It also may have a side wall of a length which assists in obtaining reproducible results by positioning the camera at a controlled distance from the patient's tooth or the tooth shade. Even without the isolation sleeve, the system may include a reference card having a background color to enhance the image of the patient's tooth, the card optionally including an opening for receiving the patient's tooth or a reference shade.

[0024] The invention also relates to a non-transitory computer readable medium that includes one or more programs for carrying out a method for addressing a dental need in a patient involving modification of tooth shape, alignment, or color. The method includes the steps of receiving an electronic image of a patient's tooth; storing the image electronically in memory storage; and communicating the image to a party for evaluation of the modification of tooth shape, alignment, or color in connection with the addressing of the patient's dental need. The image is stored in memory on a hard drive of a computer or on a removable disk.

[0025] The program(s) may also carry out a method step of displaying the image on a computer monitor, wherein the displayed image includes RGB chromaticities of the patient's tooth. The electronic image preferably includes information representative of the patient's tooth color. In particular, the image includes a determined color of the patient's tooth and is communicated to the party or user of the system. Generally, the image is communicated to a dental laboratory for preparation of a replacement tooth. Also, the monitor can be used to simultaneously display color information of the patient's tooth and tooth shade information so that visual comparisons can be made.

[0026] The program(s) may also carry out method steps of storing a plurality of conventional tooth shades electronically in memory storage, and identifying tooth shade(s) for the replacement tooth by electronically comparing the color information of the electronic image to the a plurality of electronically stored tooth shades and selecting tooth shade(s) representative of the patient's tooth. Typically, the party is a dental laboratory and the program(s) also carry out a method step of printing information displayed on the monitor for communication to the dental laboratory for preparation of a replacement tooth.

[0027] The information representative of the patient's tooth color is obtained from a camera, preferably a color camera and in particular an intraoral video camera or an intraoral CCD camera.

BRIEF DESCRIPTION OF THE DRAWINGS

[0028] A more complete understanding of the invention may be obtained by reference to the drawings, which illustrate preferred embodiments in which:

[0029] FIG. **1** shows a prior art intraoral camera system;

[0030] FIG. **2** illustrates a tooth shade analyzer system constructed according to the invention;

[0031] FIG. **3** illustrates a typical prior art tooth shade guide;

[0032] FIG. **3**A illustrates one tooth shade tab of the shade guide in FIG. **3**;

[0033] FIG. **4** illustrates a digital data block constructed according to the invention for specifying a tooth shade color, color image information, and an associated manufacturer;

[0034] FIG. **5** shows an operational use of the system of FIG. **2**;

[0035] FIG. **6** illustrates image averaging and specification techniques, according to the invention;

[0036] FIG. **7** illustrates an image comparison on the system of FIG. **2**;

[0037] FIG. **8** illustrates a common aperture color CCD camera and handpiece constructed according to the invention, and which form another embodiment of a shade analyzer system;

[0038] FIG. **9** shows an alternative CCD array technology, according to the invention, and which is suitable for use within the camera of FIG. **8**;

[0039] FIG. **10** is a perspective view of a background color reference member;

[0040] FIG. **11** is a side schematic view of a camera and isolation sleeve according to the invention; and

[0041] FIG. **12** is a perspective view of the isolation sleeve of FIG. **11** viewed from the camera when detached therefrom.

DETAILED DESCRIPTION OF THE PREFERRED EMBODIMENTS

[0042] A number of different aspects of the invention are disclosed. In one aspect, the invention provides a system for determining the tooth shade of a patient's tooth. A camera, preferably an intraoral camera, captures the image of the patient's tooth, including color information representative of the tooth's color. A shade analyzer sub-system is in electrical communication with the intraoral camera, and preferably has (i) a color processing section for determining the color of the patient's tooth from the color information of the image; (ii) storage memory for storing shade information representative of a plurality of tooth shades (i.e., each of the tooth shades corresponds to a different tooth color), (iii) a color correlation section for comparing the color of the patient's tooth to the plurality of tooth shades and for identifying a tooth shade with a color corresponding to the color of the patient's tooth, and (iv) means such as a display terminal for communicating the identified tooth shade to a user of the system.

[0043] In another aspect, the system includes a monitor used to display the color image to a user of the system. The shade analyzer sub-system thus communicates a tooth color representative of the identified tooth shade to the monitor, thereby providing a user of the system with a visual comparison of the patient's tooth color with the color of the identified tooth shade.

[0044] In a further aspect, the color processing section determines RGB chromaticities of the color image, and each of the plurality of tooth shades has a corresponding RGB representation of the tooth color stored in memory. In such an aspect, the color correlation section quantitatively compares the RGB chromaticities with the RGB representation of each of the tooth shades, and compares and identifies a tooth shade based upon a comparison of the chromaticities and the RGB representations.

[0045] In still another aspect of the invention, the system associates one or more of the plurality of tooth shades with at least one standardized shade corresponding to a particular manufacturer's porcelain product. Accordingly, the system communicates the standardized shade to a user of the system so that the desired tooth may be constructed.

[0046] The color correlation section of the invention can also identify a combination of tooth shades having a combined color corresponding to the color of the patient's tooth. As such, the system can (i) associate each of the tooth shades in the combination with at least one standardized shade corresponding to an particular manufacturer's porcelain product, (ii) specify fractions of each of the standardized shades needed to form the combined color, and (iii) communicate information identifying the fractions of each of the tooth shades in the combination to a user of the system.

[0047] The invention also provides a tooth shade analyzer system for determining the tooth shade of a patient's tooth. One section of the analyzer communicates with an intraoral camera of the type which captures the image of the patient's tooth, including color information representative of a color of the tooth. Other sections of the analyzer
(i) determine the color of the patient's tooth from the color information of the image, and/or (ii) store shade information representative of a plurality of tooth shades. A color correlation section compares the color of the patient's tooth to the

plurality of tooth shades and identifies one or more tooth shades with a combined corresponding to the color of the patient's tooth. Finally, the system includes means for communicating with devices such as the display monitors to communicate the one or more identified tooth shades to a user of the system. In this manner, the analyzer matches the patient's tooth with one or more corresponding tooth shades and assists in reconstructing the patient's tooth.

[0048] The invention also includes a method for determining the tooth shade of a patient's tooth, including the step of: capturing an image of the patient's tooth with a camera, the image including color information representative of tooth color; determining the color of the patient's tooth from the color information of the image; comparing the color of the patient's tooth to a plurality of tooth shades, the tooth shades being stored in an electronic medium; identifying one or more tooth shades with a combined color corresponding to the color of a patient's tooth; and communicating the one or more identified tooth shades to a user of the system.

[0049] A further method of the invention compares to tooth shade of a patient's tooth after the patient's teeth are cosmetically whitened, including the steps of: capturing a first image of the patient's tooth with an intraoral camera before the tooth is cosmetically whitened, the first image including first color information representative of a color of the tooth; processing the color information of the image to determine the color of the patient's tooth; comparing the color of the patient's tooth to a plurality of tooth shades, the tooth shades being stored in an electronic medium; identifying one or more tooth shades with a combined color corresponding to the color of the patient's tooth; whitening the teeth; communicating the one or more identified tooth shades to a user of the system; and viewing the patient's tooth on a monitor after the whitening step while simultaneously displaying an image of the patient's pre-whitened tooth, to provide before and after imagery.

[0050] In another aspect of the invention, a process is provided for manufacturing a reconstructive tooth for a patient, including the step of: capturing the image of the patient's tooth with an intraoral camera, the image including color information representative of a color of the tooth; processing the color information of the image to determine the color of the patient's tooth; comparing the color of the patient's tooth to a plurality of tooth shades, the tooth shades being stored in an electronic medium; specifying one or more tooth shades, and any fractions thereof, having a combined color corresponding to the color of the patient's tooth; and painting one or more layers of porcelain onto a model of the patient's tooth, each of the layers of porcelain corresponding to the specified tooth shades and the fractions thereof.

[0051] The invention also includes a system for determining the tooth shade of a patient's tooth by utilizing color CCD cameras. In one aspect, a color CCD camera captures the image of the patient's tooth, including color information representative of a color of the tooth. A shade analyzer subsystem is connected for electrical communication with the CCD camera, and has (i) a color processing section for determining the color of the patient's tooth from the color information of the image, (ii) a storage section for storing shade information representative of a plurality of tooth shades, each of the tooth shades corresponding to a different tooth color, (iii) a color correlation section for comparing the color of the patient's tooth to the plurality of tooth shades and for identifying a tooth shade with a color corresponding to the color of the patient's tooth, and (iv) a section for communicating the identified tooth shade to a user of the system.

[0052] In accord with the invention, the CCD camera can include three CCD arrays, each of the arrays collecting image data corresponding to a color selected from the group of red, green and blue. Alternatively, the CCD camera can include a single CCD array, including a plurality of proximately located pixels corresponding to a color selected from the group of red, green and blue, each of any group of three pixels having a different color associated therewith.

[0053] FIG. **1** illustrates a typical prior art intraoral camera system **10**. The system **10** includes a wall-mounted intraoral camera **12**, which includes twin halogen lamp light source (not shown) for uniform illuminance, one or more handpieces **14***a*, **14***b*, a digital video processor **16** (typically an IBM-compatible PC), which includes a hard drive **18** and floppy drive **20**, and a color video monitor **22**.

[0054] In operation, a dentist points a selected handpiece **14***a*, **14***b* at the target location within the patient's mouth to illuminate and view the resulting, full color image on the screen of a monitor **22**. The endoscope handpieces **14***a*, **14***b* come in varying styles, including a wide angle configuration, e.g., a 100 degree field of view (FOV) for posterior and anterior views, and a near 0 degree FOV for a full-arch and full face images. The processor **16** provides storage for any selected image, and can further display selected close-ups on the monitor screen **22** through zoom capabilities.

[0055] There are several manufacturers of intraoral camera systems, offering an array of features. For example, Insight™, of San Carlos, Calif., offers a Power 0/100 similar to the one shown in FIG. **1**. Other manufacturers include Cygnus Instruments, Inc. (Cygnascope™), of Goleta, Calif. VistaCam™ is yet another prior art intraoral camera system that incorporates a 90-degree FOV fiberoptic handpiece that delivers full color images from about 6 mm, i.e., the size of one typical tooth, to an image of the patient's whole smile. Therefore, the intraoral camera systems described above offer full color imagery of a patient's tooth. The image may be stored, e.g., in a personal computer on a disk **18**, **20**. Also, the images can be advantageously displayed on the monitor screen **22**.

[0056] The invention makes use of an intraoral camera system of the type described above. Specifically, FIG. **2** illustrates one embodiment of the invention and which shows a tooth shade analyzer **29** including an intraoral camera **30**, associated handpieces **32***a*, **32***b*, and a shade-analyzer subsystem **34**. Preferably, the subsystem **34** is a digital video processor that is similar to the processor **16** of FIG. **1**, and thus preferably includes the video processing capabilities of the processor **16**, such as known to those skilled in the art. A storage medium **36**, such as a hard disk **18** or floppy **20**, stores digital color images of a plurality of tooth shades, such as each of the sixteen shades of the Vita™ shade guide. The storage medium **36** further stores any images collected by a user of the system **29**.

[0057] The storage of the digital color images of one or more shade guides is relatively straight-forward. In particular, FIG. **3** illustrates one shade guide **38** having sixteen separate tabs **40**. Each of the tabs **40** is removable from the guide **38** so that it can be placed and viewed next to the patient's teeth. FIG. **3**A illustrates one tab **40** that is removed from the guide **38**. The tab holder **40***a* typically includes color information about the selected tab **40**, here shown as shade "A2."

[0058] In accordance with the invention, each of the tabs **40** are illuminated by one or the handpieces **32***a* or **32***b* so that a color image is captured and stored in the medium **36**. The image is accompanied by associated information about that shade, such as the manufacturer type, e.g., the Vita shade guide, and the particular shade, e.g., "A2." For example, FIG. **4** illustrates one storage block **42** of data for storage as digital memory and which is representative of one tooth shade. In particular, block **42***a* includes digital color image information, block **42***b* denotes the particular tooth shade, e.g., "A2," and block **42***c* denotes the manufacturer name, so that the associated tooth shade porcelain can be purchased from the correct manufacturer. Generally, the blocks **42***b*, **42***c* of data are represented by digital words that specify the information, while block **42***a* includes image data corresponding to both color and spatial information.

[0059] Preferably, the color image data within the block **42***a* is in a RGB format (i.e., Red, Green, Blue digital format, such as known to those skilled in the art) which specifies a color pixel within the image to an accuracy exceeding the number and color spread of the selected shade guides. For example, if sixteen shades are stored within the memory **36**, then the bit-specificity required of the color-coded data within the image block **42***a* should span and discriminate at least those sixteen shades of white. For example, if each color of the RGB is specified at 3-bits each, then 256 standard colors are discernible by the system **29** to cover sixteen tooth shades. Greater color determination accuracy is achieved with increased color-coding. In addition, if all the manufacturers of tooth shades are loaded into the memory **36**, then even more color-coded accuracy is required, e.g., 8-bit per RGB color.

[0060] The display of the color imagery within the digital data block **42***a* is known to those skilled in the art. Specifically, the RGB information within the data block **42***a* specifies the color for each pixel on the monitor **44**, FIG. **2**, which is similar in capability to the monitor **22** of FIG. **1**. The particular video driver (not shown) used to drive the monitor **44** specifies and controls the color and image display as appropriate. The RGB format specifies a color corresponding to signals which produce a suitable color picture on the monitor having the reference colors defined by the RGB chromaticities.

[0061] Once the plurality of shades are loaded into memory **36**, the system **29** is ready for use. FIG. **5** illustrates this process in more detail. A user illuminates the desired tooth **50**, (illustratively shown outside of the patient's mouth) with the handpiece **32***a* such that an image **52** of the tooth **50** is displayed on the monitor **44**. Although this step of forming an image on the screen **44** is not required, it helps to assess the accuracy to which the camera **30** captured the image **52**.

[0062] As above, this image data **52** is stored into a block such as block **42**, FIG. **4**. The shade analyzer subsystem then compares the digital information within the block of data representing the image **52** with the blocks of data representative of the several tooth shades. In one embodiment, a comparison of the RGB values is made between the tooth image data **52** and the several shades to find a best fit or match.

[0063] It is important to note that this process has several advantages over the prior art. In particular, as long as the same camera **30** captures the data of the tooth shades and the patient's tooth shade data, it does not matter that the stored image color within the processor **34** match the perceived color or hue observed by a typical human. That is, as long as the data captured by the system **29** correlates to the same reference, e.g., the same camera **30**, the match between the image **52** and the plurality of tooth shades will be calibrated automatically. This is in contrast to many of the prior art references, e.g., U.S. Pat. No. 5,383,020, which requires a sensitivity maxima of the human eye. The invention has no corresponding limitation because the camera of the system **29** objectively gathers the data from the same internal source. Nevertheless, it is preferable that the color display and coding of the camera **30** correspond to natural and perceived colors so that the image appears normal to a viewer.

[0064] Those skilled in the art should appreciate that the data from the plurality of tooth shades can also be loaded from a floppy disk into the subsystem **34**. More particularly, the tooth shade data from the one or more manufacturers can be installed directly into the system **29** without physically capturing the image of each tooth shade, provided that the data is captured by a camera that is similar to the camera **30**, or by a camera that is calibrated to within an acceptable margin to the camera **30**. In this manner, a user of the system **29**, e.g., a dentist, need never have actual tooth shade tabs at the office. Rather, the system **29** is used to capture color data on the patient's tooth; and the stored tooth shade information within the system **29** is automatically extracted, including a manufacturer identifier.

[0065] It is worth noting that not all tooth shade information is readily derived from the patient. In particular, unlike the tooth shades from the shade guides, which are very uniform in color, a patient's tooth can include a myriad of different shades. Tooth stains and the like alter the tooth's color spatially, so that a selection or integration of color is preferred. FIG. **6** illustrates one embodiment of the invention for dealing with this non-uniformity.

[0066] Specifically, FIG. **6** shows a tooth image **60** of a patient's tooth on the monitor **44**. Each pixel **62**, which is grossly over-sized for illustrative purposes, corresponds to a different spatial location and color of the tooth's image **60**. Accordingly, a user of the system **29** can select one of the pixels at the desires color by pointing and clicking a mouse pointer **64**, via the mouse **66**, at any selected location (the details of the mouse and mouse pointer are widely known to those skilled in the art without further reference hereto, and are shown for illustrative purposes only). This selected information is then stored with the block of data, e.g., block **42***b* of FIG. **4**.

[0067] Alternatively, the image of the tooth **60** can be averaged over a selected area by selecting a particular region for which the color imagery is averaged. For example, if the tooth **60** is to be averaged over the two pixels identified by the outline **68**, then the subsystem **29** averages the two RGB values and specifies the tooth shade match in block **42***b* as an average of the two.

[0068] FIG. **7** illustrates another monitor **44'** and subsystem **34'** constructed according to the invention, each of which is similar to the monitor **44** and subsystem **34** of FIG. **2**, respectively. In the illustrated embodiment, an image **70** of a patient's tooth is matched to the appropriate shade, as above, and then an image **72** of the matched shade is also displayed on the monitor **44'**. The subsystem **34'** further generates and displays the tooth shade identifying match, e.g., "A2," on the screen **44'** so that the ordering information about the tooth reconstruction is easily ascertained. In the illustrated embodiment, a visual comparison between the tooth and the selected

shade is made available to both the dentist and the patient. The display **44'** can also display the particular porcelain product information.

[0069] If should be apparent to those skilled in the art that the data and information displayed on the monitor **44'** can also be downloaded to a printer **76**, so that a permanent record of the exam is obtained in hard-copy form.

[0070] In the event that the system **29** of FIG. **2** does not find a close match to one existing tooth shade, the subsystem **34** specifies a combination of tooth shades that correspond to the color of the patient's tooth image data, e.g., the image **52** of FIG. **5**. Preferably, this information is determined in fractions of the appropriate shade, e.g., ½ "A2" and ½ "C4." Such fractions are determinable, according to one embodiment of the invention, by comparing the RGB data within the plurality of tooth shade blocks **42***b* with the actual patient's tooth shade image information. If the RGB data of the patient's tooth is equal to the chromaticity sum of ½ "A2" and 1/2 "C4," then such a fraction is entered into the match data block **42***b* for the selected tooth shade, and displayed on the screen **44** for the user. The chromaticity mathematics used to combine and subtract colors is known to those skilled in the art. Further detail may be found with reference to "Television Engineering Handbook," edited by K. Blair Benson, McGraw-Hill (1986), which is incorporated herein by reference.

[0071] The patient's tooth shade information is typically communicated to a laboratory which manufactures the reconstructed tooth via a plurality of porcelain coatings. This process of constructing porcelain layers onto a tooth model is known in the art; although the specification of the differing porcelain layers by data generated by an intraoral camera is specific to the invention. In the event that certain fractions of different porcelain layers are needed, such as described above, the system of the invention again provides and generates the appropriate shade fractions corresponding to the multiple layers.

[0072] Other color theory details, including the adding and subtracting of multiple colors, may be found with reference to the following patents, each of which is expressly incorporated herein by reference: U.S. Pat. No. 5,383,020, entitled "Method and apparatus for determining the color of a translucent object such as a tooth;" WO 86/03292, entitled "A spectrum-photometer device for exactly determining the color of a dental plate and or dental pluggings;" U.S. Pat. No. 3,986,777 entitled "Tristimulus colorimeter for use in the fabrication of artificial teeth;" U.S. Pat. No. 4,654,794 entitled "Methods for determining the proper coloring for a tooth replica;" U.S. Pat. No. 4,836,674 entitled "Method and apparatus for determining color, in particular of a dental prosthesis;" U.S. Pat. No. 5,231,472 entitled "Color matching and characterization of surface coatings;" and U.S. Pat. No. 4,247,202 entitled "Automatic computing color meter."

[0073] FIG. **8** illustrates another embodiment of the invention, and which includes a common aperture color CCD camera **80**. The camera **80** is commonly known as a "three-chip" color camera because of the three separate area CCD arrays (and preamplifiers) **82***a*, **82***b*, **82***c*. A complex prism **83** slits the light energy entering through the aperture lenses **84***a*, **84***b* into the three RGB color components. That is, each of the arrays **82** uniquely corresponds to one of the three color spectrums, such as Red. A housing **86** surrounds and protects the camera **80** from contact with external influences. The outputs from the three arrays **82***a*, **82***b*, **82***c* connect to a common RS232 interface **88**, which is in turn connected, via signal lines **89**, to a digital video processor shade analyzer subsystem, such as described above.

[0074] The size of the camera **80** is small, typically about 40 mm^3 or less. One manufacturer of a camera **80** includes Richter Enterprises, of Del Norte, Colo., which makes the Model AD01 Common Aperture Camera.

[0075] The front aperture section **90** of the camera **80** connects to a handpiece **92**—similar to the handpieces **32***a*, **32***b* described above—which is utilized by the dentist to illuminate and capture light imagery within the patient's mouth. For example, one acceptable handpiece **92** is an endoscopic handpiece which derives illumination from an external source **94**, e.g., a lamp. The source is imaged through the endoscope to provide illumination **96** at the target area designated by the dentist; and the endoscope recaptures the light scattered from within the patient's mouth to form an image, in conjunction with the camera **80**, at the several CCD arrays **82***a*, **82***b*, **82***c*.

[0076] Each of the CCDs **82***a*, **82***b*, **82***c* is coaligned with the other so that three distinct pixels, i.e., one each corresponding to R, G or B chromaticities, substantially view the same target point. Typically, each of the pixels specifies an 8-bit (or even 10-bit) color, so that, in total, the combination of the three arrays form a possible 256×256×256 colors. This provides sufficient resolution to discern several shades of white within the shade guides, so that a particular guide may be matched with a patient's tooth.

[0077] Alternatively, the arrays of FIG. **8** can be replaced with a single array **100**, FIG. **9** (as such, the prism **83** is also no longer required). Such an array **100** is popular in lower cost Camcorder technologies. In one embodiment, the array **100** has serial RGB pixels along each two of the array, here denoted as "R", "G" and "B" within each pixel **102**. This scheme reduces resolution; although it also reduces costs. As above, each of the three RGB pixels is utilized to assess and determine shade color.

Example

[0078] The following example illustrates the use of a CCD camera to provide a dental color match for a patient's tooth. The camera was connected to a Personal Computer ("PC"). Several images of the patient's tooth were taken and compared for consistency and definition of color variance. To verify consistency, a software program was used to interface with the camera to take snapshot images of Vita Lumin Vacuum Shades using the camera. The images were stored on the PC for later analysis. All images included the sample media and color reference at the same location in the frame. A software program was written to analyze the stored snapshots. Evaluation areas (sample and reference) were sampled and results of the color analysis were presented. The color reference was used to overcome the auto-brightness which could not be disabled on the camera. The software automatically adjusted the sample results using the color reference.

[0079] The following camera was used and found to be preferred:

[0080] Type: Intraoral

[0081] Manufacturer: Welch-Allyn

[0082] DLS 400 Light source (Sn: D97-652920)

[0083] DHP Hand Piece

[0084] Lenses Green (General purpose), White (Close Focus) and Red (Full Face) This camera has a built in light source with a color temperature of 5600K and was select to provide more consistent results than using a separate light source. The camera has auto white balance that is turned off

when using the light source. The camera has no external control of auto-brightness, but it is controllable by the camera firmware.

[0085] An Image Acquisition Hardware (Frame Grabber) that was used was an Alaris Quick Video Transport. This results in a sampled color of 24 bits being stored on the PC. It has an S-Video (SVHS) input to match the output from the camera to provide the best possible results by using the best signal output from the camera.

[0086] The software uses a Twain protocol interface to grab images from the camera using the Frame Grabber. This is a standard software interface that allow other cameras and Frame Grabbers to be tested without the need for a change of software.

[0087] The camera was used to provide an image of the sample area of a patient's tooth on a monitor screen. The PC and frame grabber captured the image onto the hard disk for analysis. The images stored from the Frame Grabber were selected to be 640 pixels wide by 480 pixels high, using 24 bits per pixel for color, with 8 bits each for red, green and blue ("RGB"). The color is coded as red, green and blue signals, each with a value from 0 to 255. An RGB value of (0,0,0) represents black, and (255,255,255) represents white.

[0088] As the RGB values alone are not very intuitive for analyzing color, they were converted into the Hue Saturation and Intensity color space by using an algorithm. The Gonzalez and Woods method is used to calculate Hue Saturation and Intensity (HSI), as follows:

[0089] R=Red value for pixel

[0090] G=Green value for pixel

[0091] B=Blue value for pixel

[0092] Intensity=⅓ (R+G+B)

[0093] Saturation=1−(3/R+G+B))*Min(R, G, B)

[0094] $\text{Hue}=\text{Cos}^{-1}\ ((0.5*((R-G)+(R-B)))/((R-B)*(G-B))^{0.5})$

[0095] If S=0, Hue is meaningless

[0096] If (B/Intensity)>(G/Intensity) then Hue=360−Hue

[0097] Since Hue is an angle in degrees values were normalized to 0.1 with Hue=Hue/360

[0098] The RGB color space is a simple cube, with R, G and B emanating from one corner along three perpendicular edges. The origin corner (0,0,0) is black, and the opposite corner (1,1,1) is white. All points along this line from corner to corner are shades of grey. The HSI color space is this same cube stood on the origin corner, with the Black White line being vertical. The black-white line is the intensity axis, the hue is given by an angle from the intensity axis and the saturation is the distance from the intensity axis to the color point (i.e., the radius). The new VITAPAN 3D-Master Shade system uses an L*a*b* Color Sphere to determine tooth shades based on Value, Chroma and Hue. It is possible to convert the RGB values to this color system, if necessary or desired.

[0099] The software for analyzing the image was written to allow the selection of a particular area of the tooth for analysis. This area was actually selected by human eye, and was a matter of judgment.

[0100] The initial tests using a normal video camera and desktop computer camera showed that the white color balance used by these cameras (and auto brightness) changed the colors of the subject viewed by the cameras even while trying to maintain constant conditions. On most cameras it is not possible to turn off the auto white balance.

[0101] The initial tests with the Welch-Allyn intraoral camera were performed by using the camera hand held, as this reproduces the current method used by a dentist to take such pictures. These tests gave pictures of varying quality, orientation, distance from tooth etc. The comparison of the data taken from these pictures indicated that the camera can determine color differences, but that the auto brightness on the camera could cause problems.

[0102] A3, B3 and C3 Vita Shade Images were imaged by the hand held camera. The shades were still in their holder, and the camera passed over each one to capture the images. The software program was used to sample the images, but it was found that intensity values across the different sample sets varied greatly. The lighter shades (A1, BI, C2, and D2) gave the poorest cross sample correlation, possibly due to the sample color being closer to white with ambient lighting and reflection causing interferences.

[0103] The inclusion of a reference color around the sample helped to give a reference for intensity correction, but the varying lens distance from sample still gave images of varying quality. The use of a reference color was an attempt to simultaneously obtain distance measurement, color reference and stray light protection. As shown in FIG. **10**, a background color reference member **105** was a strip of construction paper **115** with a cut-out or opening **120** that approximates the shape of the patient's tooth or a reference such as a Vita shade. Each image was taken at approximately the same distance and orientation. Better results were obtained than without the reference, but there was still a problem with the Hue, and the varying distance of the camera, and hence light source from the sample. Varying angle on the reference also made differences. When measuring the color of the tooth or reference shade, the sampled area **114** should be chosen to avoid lamp reflections **116** or other inconsistencies. The background **118** of the reference member is also sampled.

[0104] The final preferred method used a single fixed area of the image for sample and a separate area for reference, with the image size and orientation controlled by the use of a sample box or isolation sleeve. A cream color was chosen for the sleeve as it could also be used as the reference color for all tests. The isolation sleeve was attached firmly to the camera head to allow the light source to illuminate the inside of the sleeve and to enable the camera lens to have an unobstructed view of the bottom inside face of the sleeve and the sample opening.

[0105] As shown in FIG. **11**, the isolation sleeve **125** surrounds the camera lens **130**, and has an opening **133** in the end opposite to the lens to accommodate the Vita shade or the patient's tooth **160** to be sampled. The isolation sleeve **125** reduced two major consistency problems encountered when using the camera without it. Firstly, it reduced the variation in distance and orientation of the camera **155** from the subject, and secondly, it removed unwanted ambient light contamination. As shown in FIG. **12**, the inside surfaces **140** of the isolation sleeve **125** were made matte black to avoid reflection and prevent color contamination of the subject. The color reference **135** was provided in a separate chamber in the box to prevent cross color contamination with the tooth or sample shade. A double isolation sleeve **125** was used with both chambers **145**, **150** in front of the light source and camera lens, but with the subject and the color reference in separate chambers. Half of the resultant image was the color reference, while the other half was of the tooth to be evaluated.

[0106] Only one area was sampled on the subject tooth, although it is preferable to divide the subject into multiple target areas, and construct a shade database for each subsection. Thus, when a patient's tooth color partially matches two shades, the areas can be referenced individually.

[0107] Where the sample area contains a reflection of the light source, this greatly affects the averaged values for the colors. The lamp reflection is usually samples as very near bright white (255,255,255)). To help omit these points and any dark spots on the sample, a selective pixel usage was adopted. The area being sampled was averaged, and the Maximum and Minimum RGB values noted. The area was then rescanned and any pixel with any of the RGB values outside of half way from the Average to Max value or Average to Min value are ignored, i.e.:

$$(\text{Min}+\text{Average})/2)<\text{Valid Value}<(\text{Max}+\text{Average})/2$$

[0108] When the color references were compared, it was found that as different shades were viewed, the saturation, intensity and hue of the reference also changed. This was most likely due to reflection from the sample contaminating the color reference, and the fact that the camera automatically adjusted for brightness. Hence the greatest change is seen in intensity and saturation.

[0109] The values for the color reference were used to adjust the values taken from the sample in the same image. The difference in the value from the color reference for each picture was lineally adjusted by a delta value such that the adjusted values were then identical for each image. This delta value for each image was also applied to the values taken for the sample. This made the comparison of one image to another much more consistent. The hue variation in the reference sample was found to be less than 1.5% of the camera's full range.

[0110] While the intensity comparison of the samples exhibited a variation in the shades, there is still variation in the levels from one set of samples to another i.e., the different images of the sample shade give different results. Although the saturation varied over a larger range of values, the difference between the sample sets for the same shade was still noticeable.

[0111] The hue of the sample taken from the images was erratic and showed very poor correlation between the same shade in the different sets of samples. To make the images more consistent, the image is adjusted by applying a delta to the sampled RGB value that would make the reference color become the same value for each image. This compensates for the auto brightness control of the camera. When the reference adjustments were taken into account, the correlation of the results improved. The RGB reference values were set to R: 0.66583, G: 0.57465, and B: 0.55137. A reflection filter was also inserted into the sampling algorithm. This attempts to ignore any pixel that is more than 50% away from the average value. The correlation between sample sets improved with these adjustments, and with reflection filtering.

[0112] The results showed that the use of a normal CCD camera with an external light source is possible, but would require a more extensive calibration system than is required by using an internal light source. The color temperature of the light being seen by the camera would vary depending on the location of the patient near the light source, amount of sunlight experienced on the day, and on the type of room lighting used. Fluorescent lighting gives a flickering light, which can cause problems with certain shutter speeds on the camera.

[0113] The camera must also be able to deselect the auto white balance which would distort colors in favor of a balanced picture, and if possible the auto brightness control which would change intensity. This would give rise to much manual adjustment as the ambient lighting conditions change to ensure the camera was operating non-saturated.

[0114] An intraoral camera with a built in light source that is delivered to the sample from the camera head is therefore preferred. The first observation from using the camera was the inaccuracy and poor repeatability of trying to sample a shade using the camera held in the hand only. The distance from the sample seems to be critical, and the ambient light contaminating the sample caused poor readings. Therefore, it is preferred that the ambient light be prevented from contaminating the sample, and that a distance reference from the camera lens to the sample be provided. The initial trial with the sample box attached to the camera head resolved these problems and provided good results.

[0115] It is useful to avoid the introduction of stray light as the color reference is affected by color contamination from light reflected from the sample. When the color reference values were used to create a correction factor for the RGB values obtained from the sample, the isolation sleeve **25** minimizes these problems by reducing the light reflected from the sample and the light contamination of the color reference.

[0116] The isolation sleeve **125** is attached to the camera head to prevent stray light from entering. The sleeve is shown viewed from the camera side. The orientation is dependent on the light source, as it is preferred to have the light distributed evenly into both chambers of the sleeve. The black walls of the isolation sleeve can cause interferences with the auto brightness control of the camera, as the auto brightness control will try to maintain an 'average' brightness for the whole image and thus may cause the actual sample or color reference to saturate. This is where the camera auto adjusts to the point that the sample returns a color value of pure white to balance the black in the rest of the image, and all shades of the white, and thus the real color will be lost. The auto brightness should be turned off for best results.

[0117] The color reference in the isolation sleeve can be made consistently, so that no further calibration should be required. Each image will calibrate itself. If the color reference is not sufficiently consistent, the reference itself will need calibration using a further color reference (a Vita shade for example). If the reference fades with use, it can be replaced to insure reference consistency.

[0118] If the Colour Space of the Lumin Vacuum Shade Guide is not evenly distributed, the current system of first selecting the hue, and then the saturation and lightness makes the analysis for the software difficult if the camera cannot accurately determine the exact hue. The camera is being used to determine hue differences over a very small range of its operative area (less than 1.5% of the full camera range). The resolution required to perform this analysis should be available on the camera, and discernible on the PC. As this is a relatively small range of values, the repeatability of the image taking process must be made very high. It is not just a case of taking a picture of the tooth and analyzing it. The conditions required by the camera must be stabilized. Again, the isolation sleeve provides a controlled environment such that repeatable and reproducible images are obtained. The images contain the color reference, and can if necessary be sent to the laboratory together with the dentist's requirements for recon-

structing the tooth. For infection control, the isolation sleeve should be made to be disposable.

[0119] Older shade guides are not evenly spaced and this can introduce inconsistencies in the results. Newer 3D color shades are more evenly distributed and thus make color differentiation easier for the camera. The new shades include 5 numbered lightness (value) categories. These are then subdivided into a choice of three Chroma levels (1, 2, or 3) and for lightness groups 2, 3 and 4 there are three hues (L, M and R). This requires a different approach to analyzing the sampled data, as priority is now given to the Lightness value (Intensity) and then the Chroma (Saturation). It was found that both values gave good correlation across different data sets. The Hue is then only divided into three possible categories (depending on the lightness category) which makes the color analysis much more consistent. The sample box also provides better color and hue correction as well as intensity correction for these new shades.

[0120] Further details of these tests can be found in the report that is annexed to U.S. Pat. No. 5,9961,324. It should be apparent to those skilled in the art that certain modifications can be made to the invention herein without departing from the true scope of the invention.

What is claimed is:

1. A non-transitory computer readable medium comprising one or more programs for carrying out a method for addressing a dental need in a patient involving modification of tooth shape, alignment, or color, wherein the method comprises the steps of receiving an electronic image of a patient's tooth; storing the image electronically in memory storage; and communicating the image to a party for evaluation of the modification of tooth shape, alignment, or color in connection with the addressing of the patient's dental need.

2. The medium of claim **1** wherein the image is stored in memory on a hard drive of a computer or on a removable disk.

3. The medium of claim **1**, wherein the program(s) also carry out a method step of displaying the image on a computer monitor.

4. The medium of claim **3**, wherein the displayed image includes RGB chromaticities of the patient's tooth.

5. The medium of claim **1**, wherein the electronic image includes information representative of the patient's tooth color.

6. The medium of claim **5**, wherein the image includes a determined color of the patient's tooth and is communicated to the party.

7. The medium of claim **6**, wherein the image is communicated to a dental laboratory for preparation of a replacement tooth.

8. The medium of claim **5**, wherein the monitor simultaneously displays color information of the patient's tooth and tooth shade information so that visual comparisons can be made.

9. The medium of claim **5**, wherein the program(s) may also carry out method steps storing a plurality of conventional tooth shades electronically in memory storage, and identifying tooth shade(s) for the replacement tooth by electronically comparing the color information of the electronic image to the a plurality of electronically stored tooth shades and selecting tooth shade(s) representative of the patient's tooth.

10. The medium of claim **3**, wherein the party is a dental laboratory and the program(s) also carry out a method step of printing information displayed on the monitor for communication to the dental laboratory for preparation of a replacement tooth.

11. The medium of claim **5**, wherein the information representative of the patient's tooth color is obtained from a camera.

12. The medium of claim **11**, wherein the camera is an intraoral video camera or an intraoral CCD camera.

* * * * *