UNITED STATES PATENT AND TRADEMARK OFFICE

BEFORE THE PATENT TRIAL AND APPEAL BOARD

MEDIT CORPORATION,

Petitioner,

v.

3SHAPE A/S,

Patent Owner.

Case No.: IPR2023-01315

U.S. Patent No. 10,695,151

DECLARATION OF HASSAN FOROOSH, Ph.D.

TABLE OF CONTENTS

I. INTRODUCTION 1
II. QUALIFICATIONS 1
A. Industry Experience 2
B. Academic Experience 3
C. Other Relevant Experience 6
III. MATERIALS CONSIDERED 9
IV. TECHNOLOGY BACKGROUND 11
V. OVERVIEW OF THE ’151 PATENT 14
A. Specification of the ’151 Patent 14
B. Prosecution History 21
VI. LEGAL PRINCIPLES USED IN ANALYSIS 22
A. Prior Art 22
B. Anticipation 23
C. Obviousness 23
D. Claim Construction 28
VII. LEVEL OF ORDINARY SKILL IN THE ART 30
VIII. CLAIM CONSTRUCTION 31
IX. OVERVIEW OF THE PRIOR ART 32
A. Korten (U.S. Patent No. 10,028,810) 32
B. Lehmann I (U.S. Patent No. 6,206,691) 37
C. Lehmann II (U.S. Patent Appl. Publ. No. 2011/0188086) 39
D. Pye (U.S. Patent No. 7,341,450) 42
E. Babayoff (U.S. Patent No. 7,698,068) 44
X. THE PRIOR ART INVALIDATES ALL OF THE CLAIMED ELEMENTS OF THE ’151 PATENT 47
A. Ground 1: Claims 1, 12, 14, 15 Are Anticipated by Korten 47
1. Claim 1 Is Anticipated 47

2. Claim 12 Is Anticipated 54

3. Claim 14 Is Anticipated 56

4. Claim 15 Is Anticipated 57

B. Ground 2: Claims 1, 2, 4, 5, 9, 12-16 Are Rendered Obvious by Korten in View of Lehmann II 59

1. Claim 1 Is Rendered Obvious 59

2. Claim 2 Is Rendered Obvious 64

3. Claim 4 is Rendered Obvious 65

4. Claim 5 Is Rendered Obvious 70

5. Claim 9 Is Rendered Obvious 71

6. Claim 12 Is Rendered Obvious 72

7. Claim 13 Is Rendered Obvious 72

8. Claim 14 Is Rendered Obvious 79

9. Claim 15 Is Rendered Obvious 81

10. Claim 16 Is Rendered Obvious 83

C. Ground 3: Claims 10, 16, and 17 Are Rendered Obvious by Korten in View of Lehmann II and in further view of Babayoff.....84

1. Claim 10 Is Rendered Obvious 84

2. Claim 16 Is Rendered Obvious 88

3. Claim 17 Is Rendered Obvious 91

D. Ground 4: Claims 1, 2, 9, 12, and 14 - 16 Are Rendered Obvious by Korten in View of Lehmann I.....92

1. Claim 1 Is Rendered Obvious 93

2. Claim 2 Is Rendered Obvious 100

3. Claim 9 Is Rendered Obvious 101

4. Claim 12 Is Rendered Obvious 103

5. Claim 14 Is Rendered Obvious 103

6. Claim 15 Is Rendered Obvious 105

7. Claim 16 Is Rendered Obvious 106

E. Ground 5: Claim 13 Is Rendered Obvious by Korten in View of Pye 108

1. Claim 13 Is Rendered Obvious 108

2. A POSITA Would Be Motivated to Combine the Tooth-Shade-Averaging Features for Regions of a Patient's Tooth Disclosed in Pye with the System Disclosed in Korten 112

F. Ground 6: Claims 10, 16, and 17 Are Rendered Obvious by Korten in View of Babayoff 114

1. Claim 10 Is Rendered Obvious 115

2. Claim 16 Is Rendered Obvious 115

3. Claim 17 Is Rendered Obvious 116

XI. CONCLUSION 117

I, Hassan Foroosh, declare as follows:

I. INTRODUCTION

1. I have been retained by Medit Corporation ("Petitioner") as an independent expert in this *inter partes* review before the United States Patent and Trademark Office ("PTO") regarding U.S. Patent No. 10,695,151 ("the '151 Patent"), Ex-1001. Specifically, I have been asked to consider whether certain references disclose or suggest the features recited in claims 1, 2, 4, 5, 9, 10, and 12-17 of the '151 Patent ("challenged claims"). As explained below, it is my opinion that the challenged claims are invalid as anticipated and/or obvious in view of the prior art references discussed in this Declaration and the accompanying Petition.

2. I am being compensated at a consulting rate of $550.00 per hour. No part of my compensation is dependent on the outcome of this proceeding or any other proceeding involving the '151 Patent or any of its related patents. I have no other interests in this proceeding.

II. QUALIFICATIONS

3. My qualifications are generally set forth in my Curriculum Vitae, which is attached as Ex-1004. My Curriculum Vitae also includes a list of the publications I have authored or co-authored during the last thirty years.

4. I am a Professor of Computer Science at the University of Central Florida. My primary research interests include image/video processing, computer

vision, and image-based modeling, including 3D modeling, and machine learning (in particular deep learning), with applications in computer vision and natural language processing.

5. I received my Ph.D. in Computer Science from INRIA (French National Institute for Research on Informatics and Control), University of Nice Sophia Antipolis in 1996. I also earned a Master of Science in Computer Science from the University of Nice Sophia Antipolis in 1993, a Master of Science in Electrical Engineering from Kingston University, U.K., in 1990, and a Bachelor of Science in Electrical Engineering from Kingston University, U.K., in 1989.

A. Industry Experience

6. Prior to research and teaching, I worked as an R&D Engineer at Innovative Engineering Solutions Ltd. in London from 1990 to 1992. Between 1993 and 1996, I served as a Research Assistant in the Scene Analysis and Symbolic Image Processing Group of INRIA, where I performed research in areas such as 3D super-resolution, imaging processes for registration, and shape perception. From 1997 to 2000, I served as an Assistant Research Scientist at the University of Maryland, College Park, where I investigated topics such as image registration (2D and 3D), super-resolution of video data for unmanned aerial vehicles, super-resolution of Synthetic Aperture Radar (SAR) and Foliage Penetrating SAR

(FOPEN-SAR), Automatic Target Detection and Tracking (ATD/R). During this time, I authored one of the most cited works on registration and alignment based on phase correlation: Hassan Foroosh (Shekarforoush), Josiane Zerubia and Marc Berthod, *Extension of Phase Correlation to Sub-pixel Registration*, IEEE Transactions on Image Processing, vol. 11, Issue 3, pp. 188-200, 2002. From 2000 to 2002, I served as Senior Research Scientist at the University of California, Berkeley, where I also served as the Technical Coordinator and Principal and Research Scientist of a Multi-University Research Initiative (MURI) funded by the Office of Naval Research. As part of the project, I conducted research on multi-sensor acquisition of 3D data for autonomous 3D modeling and visualization.

B. Academic Experience

7. I joined the Department of Computer Science at the University of Central Florida (UCF) as an Assistant Professor in 2002. Since then, I have served as an Associate Professor, Professor, and CAE Link Professor of Computer Science in the same department. I also served in various capacities in the department, such as the Graduate Program Coordinator, chair of various leadership committees, and most recently, in the Faculty Senate Strategic Planning Council for UCF. I have taught a number of courses directed to computer modeling, 3D modeling, and image

analysis including 3D Computer Vision, Image Processing, Special Topics in 3D Computer Vision, and Visual Simulation.

8. I have conducted extensive research in the field of 3D computer vision and computer modeling. Some example research projects that I have conducted include *Video Analysis Techniques for Terrain Modeling and Automated Texture Mapping* (2006-2007) and *Modeling and Visualization of Musculoskeletal Structures in Dental CT-Scan* (2006-2007). For the latter project, I developed algorithms for 3D registration, modeling and visualization of maxilla and mandible of patients for dental surgery using Computer Aided Tomography (CAT) scanning.

9. I have also been the principal investigator or co-principal investigator of numerous research projects funded by the National Science Foundation (NSF), NASA, DoD, and industry, with total funding exceeding $14M since joining UCF. As one example, I recently served as the principal investigator in two projects funded by the National Science Foundation (NSF) on 3D modeling and the role of 3D information in machine understanding of digitized world. One project funded by industry was directed to the registration/alignment of dental CT scans of patients over a period of time during the treatment of a patient, with the purpose of improving the quality of 3D models, e.g. corrections and noise removal in 3D CT scans.

10. I have also worked in the area of intraoral imaging and image processing, where I directed a Ph.D. student on this subject (described more below) and was Principal Investigator for the project *Modeling and Visualization of Musculoskeletal Structures in Dental CT-Scan* (2006-2007) funded by Imaging Sciences International, Inc. This project developed algorithms for 3D modeling and visualization of maxilla and mandible of patients of dental surgery using Computer Aided Tomography (CAT) scanning. My work for this project is described in M. Balci, M. Alnasser, and H. Foroosh, *Alignment of Maxillofacial CT Scans to Stone-Cast Models Using 3D Symmetry for Backscattering Artifact Reduction*, Proceedings of Medical Image Understanding and Analysis Conference (MIUA) (2006).

11. Since joining UCF, I have advised and chaired the dissertation of over 30 doctoral students, 25 of whom have already successfully defended their doctoral dissertation and secured academic positions or industry jobs in major high-tech corporations. As one example, I served as the advisor for a dissertation directed to "*Sub-pixel Registration in Computational Imaging and Applications to Enhancement of Maxillofacial CT Data.*" As I noted above, this research project focused on registration and alignment of 2D images and 3D digitized data obtained by dental CT scans and dental imprints of a patient (*e.g.*, casts), with the aim of

improving the quality of CT scans, for example, by eliminating backscattering issues. Methods were developed to register CT models to the physical imprints of patients (*e.g.*, a stone cast model of the patient's teeth).

C. Other Relevant Experience

12. I have authored or co-authored over 190 articles in peer reviewed journals or conference proceedings, many of which relate to 3D reconstruction and metrology from uncalibrated camera images and depth cameras (such as RGB-D and LiDAR), as well as on combining shape-from-X and super-resolution (*e.g.*, shape-from-stereo, shape-from-shading, and shape-from-photometric stereo). I also have several papers and a patent on optical system designs using dynamic focusing for optical coherence tomography (OCT) 3D scanning, as well as free-form optical surface design. Some examples include: Supraja Murali, Apurva Jain, Kye-sung Lee, Panomsak Meemon, Hassan Foroosh, Kevin Thompson, and Jannick Rolland, *Superresolution imaging combining the design of an optical coherence microscope objective with liquid-lens based dynamic focusing capability and computational methods*, Proc. of SPIE Conf. on Novel Optical Systems Design and Optimization XI, SPIE Vol. 7061 (2008); Ozan Cakmakci, Gregory E. Fasshauer, Hassan Foroosh, Kevin P. Thompson, and Jannick P. Rolland, *Meshfree Approximation Methods for Free-Form Surface Representation in Optical Design with Applications to Head-*

Worn Displays, Proc. SPIE Conf. on Novel Optical Systems Design and Optimization XI, vol. 7061 (2008); O. Cakmakci, S. Vo, H. Foroosh, and J.P. Rolland, *Application of Radial Basis Functions to Shape Description in a Dual-Element Off-Axis Magnifier*, Optics Letters, Vol. 33, Issue 11, pp. 1237-1239 (2008); O. Cakmakci, B. Moore, H. Foroosh, and J.P. Rolland. *Optimal Local Shape Description for Rotationally Non-Symmetric Optical Surface Design and Analysis*, Optics Express, Vol. 16, Issue 3, pp. 1583-1589 (2008); *Systems and Methods for Designing Optical Surfaces*, Patent pending, Ozan Cakmakci, Brendon Moore, Hassan Foroosh, and Jannick Rolland, US 2009/002825A1 (2009).

13. In addition, I have written peer reviewed articles on camera self-calibration and distortion correction, including self-calibration and distortion correction for varying focal length cameras. Some example publications include: Xiaochun Cao and Hassan Foroosh, *Camera Calibration without Metric Information Using an Isosceles Trapezoid*, Proceedings of the IAPR International Conf. On Pattern Recognition (ICPR), Volume 1, pages 104-107 (2004); Xiaochun Cao, Jiangjian Xiao, Hassan Foroosh, and Mubarak Shah, *Self-Calibration from Turn Table Sequence in Presence of Zoom and Focus*, Computer Vision and Image Understanding (CVIU), 102(3):227-237 (June 2006); Nazim Ashraf, Imran Junejo, and Hassan Foroosh, *Near-Optimal Mosaic Selection for Rotating and Zooming*

Video Cameras, Proc. Of Asian Conference on Computer Vision (ACCV), Vol. II, 63-72 (2007); Imran Junejo and Hassan Foroosh, *Optimizing PTZ Camera Calibration from Two Images*, Machine Vision and Applications (MVA), pp. 1-15 (Feb. 2011); Imran N. Junejo and Hassan Foroosh, *Refining PTZ Camera Calibration*, International Conference on Pattern Recognition (ICPR) (2008); Nazim Ashraf and Hassan Foroosh, *Robust Auto-Calibration of a PTZ Camera with Non-overlapping FOV*, International Conference on Pattern Recognition (ICPR) (2008); and Imran Junejo and Hassan Foroosh, *Practical PTZ Camera Calibration Using Givens Rotations*, Proc. IEEE International Conference on Image Processing (ICIP) (2008).

14. I have been serving as the editor and/or committee member for numerous professional organizations. For instance, I have been involved with the following organizations: IEEE Transactions on Image Processing (Associate Editor, 2003-2008, 2011-2016); IEEE Conference on Computer Vision and Pattern Recognition (CVPR) (Member, Technical Committee, 2004-2012, 2015-2016, 2019-2020); IEEE Transactions on Pattern Analysis and Machine Intelligence (Reviewer, 1996-present).

15. For my work, I have been honored with numerous awards, including the *Piero Zamperoni Award*, International Association for Pattern Recognition

(IAPR) (2004) for my work in Xiaochun Cao and Hassan Foroosh, *Camera Calibration without Metric Information Using an Isosceles Trapezoid*, Proceedings of the IAPR International Conf. On Pattern Recognition (ICPR), Volume 1, pages 104-107 (2004). I have also received several Best Paper awards, including "*The Best Scientific Paper Award*" in the IAPR International Conference on Pattern Recognition in 2008, "*The Best Paper Award*" in the IEEE International Conference on Image Processing (ICIP) in 2018, and the *Distinguished Researcher*, UCF College of Engineering and Computer Science (2004-2005, 2005-2006)).

16. In sum, for decades, I have studied, taught, practiced, and conducted research in the area of 3D computer vision, covering pinhole camera model, camera self-calibration, camera distortion correction, pose estimation, 3D reconstruction, and many other related topics. I have also studied, taught, practiced, and conducted research in the area of image processing, covering various imaging modalities, electro-optical, sonar, radar, etc., algorithms for 3D reconstruction from projections, and many other related topics.

III. MATERIALS CONSIDERED

17. My opinions, as set forth in this Declaration, are based on the documents I have reviewed, my experience and background, and my knowledge and professional judgment. In forming these opinions, I have reviewed the '151 Patent

(Ex-1001), the prosecution history for the ’151 Patent (Ex-1002), the prior art discussed below, and any other material and information identified in this Declaration. I have also relied on my experience and knowledge in the field of computer memory and data storage devices.

18. In particular, my opinions regarding the invalidity of the challenged claims are based on the following prior art references, as informed by my knowledge in the field of computer memory and data storage devices.

Exhibit	Description
1001	U.S. Patent No. 10,695,151 ("the ’151 Patent”)
1002	File History for U.S. Patent No. 10,695,151
1003	Claim Construction Order and Memorandum in Support Thereof, *3Shape A/S v. Medit Corporation*, Case No. 6:22-cv-00443, Dkt. No. 76 (W.D. Tex. May 2, 2023)
1005	Plaintiff 3Shape A/S’s Final Infringement Contentions and Priority Date Contentions, *3Shape A/S v. Medit Corporation,* Case No. 6:22-cv-00443 (W.D. Tex. June 27, 2023).
1006	Petition for *Inter Partes* Review of U.S. Patent No. 10,695,151, *Dental Imaging Technologies Corporation v. 3Shape A/S*, IPR2023-00400, Paper 2 (PTAB Dec. 21, 2022).
1007	Dictionary Definition - Accuracy, Merriam-Webster.com, https://www.merriam-webster.com/dictionary/accuracy (last visited Aug. 16, 2023).
1008	Decision Denying Institution of *Inter Partes* Review of U.S. Patent No. 10,695,151, *Dental Imaging Techs. Corp. v. 3Shape A/S*, IPR2023-00400, Paper 7 (PTAB July 12, 2023).

Exhibit	Description
1009	U.S. Patent No. 10,028,810 ("Korten")
1010	U.S. Patent No. 6,206,691 ("Lehmann I")
1011	U.S. Publication No. 2011/0188086 ("Lehmann II")
1012	U.S. Patent No. 7,341,450 ("Pye")
1013	U.S. Patent No. 7,698,068 ("Babayoff")
1014	Rade D. Paravina, "Performance assessment of dental shade guides," Journal of Dentistry (2009)
1016	Patent Owner's Preliminary Response, *Dental Imaging Techs. Corp. v. 3Shape A/S*, IPR2023-00400 (PTAB April 17, 2023)

IV. TECHNOLOGY BACKGROUND

19. The '151 patent discloses methods and apparatus that come under the general umbrella of computer vison and image processing, with specific focus on intraoral scanning and analysis of tooth colors and shades. The background topics described briefly below provide a concise overview of some of the important elements of computer vision, human vision, and image processing that are relevant to understanding what a POSITA would have known in these areas at the time of filing of the '151 patent.

20. The principles behind color detection have been well-known for centuries. In fact, the RGB color model, which formed the basis for color

photography and color television, was first developed in the mid-1800s.[1] The process would take measurements of the intensity of three different colors – red, green, and blue – and then combine these intensities to provide an overall color. RGB (inspired by human vision) naturally deals with light and therefore is an additive model. In other words, different colors are generated by adding different proportions of the R, G, and B wavelengths. This makes RGB suitable for devices that deal with light, *e.g.*, a TV, a computer monitor, a digital camera (*e.g.*, the CCD array), *etc.* However, RGB as an additive model does not apply to pigments. In other words, one cannot generate arbitrary colors by adding different proportions of red, green, and blue paints in the same manner that it works for light.

21. For pigments, subtractive models are applicable. One of the most commonly known subtractive models nowadays is CMY, which is based on the subtractive primary colors of Cyan (C), Magenta (M), and Yellow (Y). A subtractive model determines the absorption (i.e. subtraction) of different wavelengths by a surface material that makes the surface appear as a particular color. Subtractive

[1] The RGB color model also coincides with the way in which people detect color through photoreceptive cells, called cones and rods. Among other differences, cones are stimulated in bright light while rods are stimulated in dim light. Moreover, cones contain three different types of photo pigments, i.e. Red (R), Green (G), and Blue (B), making them sensitive to different wavelengths, *i.e.* different colors, depending on the concentration of the type of pigment. As the light coming from a surface of an object hits the retina, its color is perceived based on the fraction of cone types that are stimulated.

models are therefore suitable for devices such as printers, rapid prototyping, or simply artistic painting. Many other variations of additive and subtractive models exist, which were introduced due to some needs arising in a particular application area. For instance, in image analysis, image/video compression, and applied perception, the need to describe colors in the same manner as humans, *e.g.*, dark blue versus light blue, led to the HSV (Hue, Saturation, Value) model, also called the HSI (Hue, Saturation, Intensity). However, regardless of the original motivations behind any of these models a key aspect of them is that there are well-known mappings between the color spaces. In many cases these mappings are linear (*i.e.*, in the form of a linear matrix equation), making it possible to acquire image data, for instance, in RGB and transform it to a subtractive space (*e.g.*, CMYK) for printing (*i.e.*, one can print an image displayed on the screen of a computer), or acquire image data in RGB and transform to HSV.

22. Similar to printing prosthesis, manufacturing in restorative dentistry relies on subtractive models, while determining a tooth color may at some point require an additive model of acquisition (*e.g.*, an RGB camera). Since a subtractive model would apply when dealing with pigments (*e.g.*, prosthesis manufacturing) reference shades have been widely considered in accurate matching of colors. *See, e.g.,* Ex-1014, at e15-e20. Manufacturers of prosthetic teeth would make available

sets of colored tabs to correspond to the various ceramic colors that they would make available for manufacturing a prosthetic tooth. These sets of colored tabs are called reference tooth shade guides or just tooth shade guides. Traditionally, to match colors for a replacement tooth, a dentist would hold various colored tabs up against the tooth to be replaced (or the surrounding teeth) to find the closest match. In some instances, the colored tabs were themselves shaped like teeth.

23. One well-known reference tooth shade guide is the VITA Classic guide, which provides 16 different reference teeth of various shades. These colors were denoted using a series of four letters (A-D) and four numbers (*e.g.*, 1-4). Such reference tooth shade values, for example, would take the form of A1, A2, etc. To find the color for a replacement tooth, the dentist or dental technician would hold one or more of the reference teeth (*i.e.*, the colored tabs) up against the physical item to find the closest matching color.

24. The manufacturer would then use the matching reference tooth shade value to select the corresponding ceramic to be used in manufacturing the replacement tooth.

V. OVERVIEW OF THE ’151 PATENT

A. Specification of the ’151 Patent

25. The ’151 Patent, titled “Detecting Tooth Shade,” is directed towards “methods and a user interfaces [*sic*] for determining the shade of a patient’s tooth or

teeth and for utilizing the determined tooth shades for designing and manufacturing dental restorations." Ex-1001, code (54), col. 1:19-22. As explained in the Technical Field section of the '151 Patent, "[w]hen designing and manufacturing a dental restoration for a patient, such as a crown or a bridge restoration, it is advantageous that both the shape and shade of the manufactured restoration is adapted to the patient's natural teeth surrounding the restoration." *See id.* at col. 1:23-27.

26. The '151 Patent further describes that "[t]he tooth color can be represented by many different color spaces, such as the L*C*h* color space representing color in terms of Lightness, Chroma and Hue, or in the L*a*b* color space as described e.g. by Hassel et al. (Hassel 2012) and Dozic et al. (Dozic 2007)." *See id.* at col. 1:32-36. To assist in matching the color of the restoration with the surrounding teeth, "the tooth colors are often expressed in terms of reference tooth shade values of a tooth shade system (often referred to as a tooth shade guide). Each reference tooth shade value in a tooth shade guide represents a predetermined and known tooth color value and often correspond [*sic*] to the color of commercially available ceramics for the production of dental restorations." *See id.* at col. 1:40-48. Such examples of tooth shade guides include the VITA 3D-Master or the VITA Classic shade guides. *See id.* at col. 1:44-50. By using a reference system, dentists

can "describe the shade of the patient's tooth in terms that a dental technician immediately understands, such that the technician will know from which ceramics he should manufacture the restoration to provide that it has the correct shade." *See id.* at col. 1:56-60.

27. In the traditional method, a dentist would "manually determin[e] which reference tooth shade value best matches the color of a patient's tooth" by holding "different pre-manufactured teeth of the shade guide at the tooth for comparison." *See id.* at col. 1:61-64. Sometimes, the dentists would take pictures "with the pre-manufactured structures arranged at the teeth." *Id.* at col. 1:64-65. As explained in the '151 Patent, "[i]n many cases, the dental restoration is manufactured with a shade profile where the shade differs from the incisal edge towards cervical end [*sic*] of the restoration." *See id.* at col. 2:57-59. Ceramic makers manufacture ceramic blocks with gradations of colors based on the reference tooth shades to take into account this typical shade differentiation along a tooth.

28. The '151 Patent describes technology, including methods and user interfaces, "for determining shade of a patient's tooth." *See, e.g., id.* at col. 2:6-7. As described in the '151 Patent, the technology "obtain[s] a digital 3D representation of the tooth, where the digital 3D representation comprises shape data and texture data for the tooth." *See id.* at col. 2:8-10. The technology then "determin[es] a tooth

shade value for at least one point on the tooth based on the texture data of the corresponding point of the digital 3D representation and on known texture values of one or more reference tooth shade values." *See id.* at col. 2:11-15.

29. Figure 7A of the '151 Patent depicts a schematic of an intra-oral scanner, according to an embodiment of the patent:

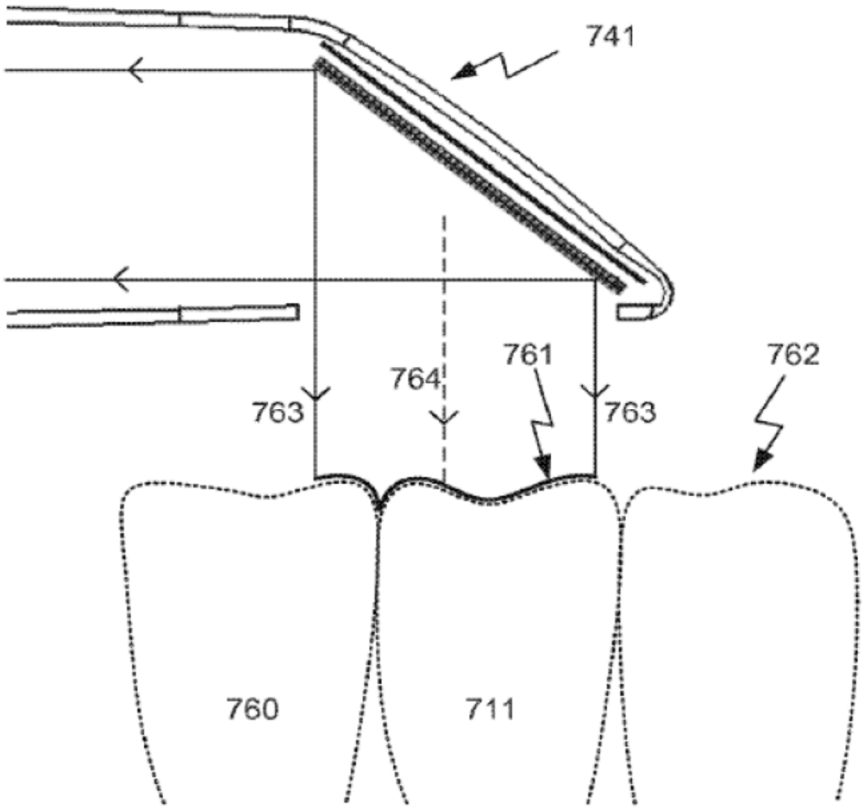

See id., Fig. 7A.

30. According to the '151 Patent, scanner 741 "is held in one position relative to" teeth 711, 760 "while recording a sequence of 2D images for one sub-scan." *See id.* at col. 16:10-14. The solid line 761 illustrates the field of view of the

scanner and "is determined by the light source, the optical components and the image sensor of the scanner." *See id.* at col. 16:15-18. As shown in Figure 7A, the "Field of View 761 covers part of the surface of the tooth 711 and part of the surface of the neighbor tooth 760." *See id.* at col. 16:19-21. The probe light rays 763 from the scanner "define the optical path 764 of the scanner probe light at the tooth 711." *See id.* at col. 16:28-32. According to the '151 patent, a "digital 3D representation of the tooth can be generated by combining sub-scans acquired from different orientations relative to the teeth, e.g. by sub-scan registration." *See id.* at col. 16:33-35.

31. According to the '151 patent, digital 3D representations of a patient's set of teeth could at the time be captured from various commercially available devices, such as "the TRIOS intra-oral color scanner manufactured by 3 shape A/S." *See id.* at col. 15:12-16.

32. According to the '151 Patent, "[m]any scanning devices have Bayer color filters with Red, Green and Blue filters and hence record color information in the RGB color space. For instance, a focus scanner can record series [*sic*] of 2D color images for the generation of sub-scans, where the color information is provided in the RGB color space. The processor 644 then comprises algorithms for transforming the recorded data into e.g. the L*a*b or L*C*h color spaces." *See id.*

at col. 15:33-35. Thus, "[t]exture data relating to the tooth color can be obtained using a scanner having a multi-chromatic light source, *e.g.*, a white light source and a color image sensor." *See id.* at col. 15:65-67.

33. The '151 Patent describes that "[a] digital 3D representation of the tooth can be generated by combining sub-scans acquired from different orientations relative to the teeth, e.g., by sub-scan registration." *See id.* at col. 16:33-35. The '151 Patent describes that such "sub-scan registration" can be accomplished using various well-known methods, such as the Iterative Closest Point (ICP) algorithm. *See id.* at col. 16:39-44. "When the sub-scans are registered to generate a digital 3D representation of the tooth, a correlation between these segments is established and the texture information of these sub-scan segments can be combined to determine the texture data for point P on the generated digital 3D representation of the tooth." *See id.* at col. 16:46-51.

34. Further, according to the '151 Patent, "[w]hen the color data is derived for a point on the tooth, the tooth shade value for that point can be determined by comparing the derived color data with the known color data of the reference tooth shade values of a tooth shade guide such as the VITA 3D-Master." *See id.* at col. 17:13-17. Such a process is illustrated, according to the '151 patent, in Figure 9A:

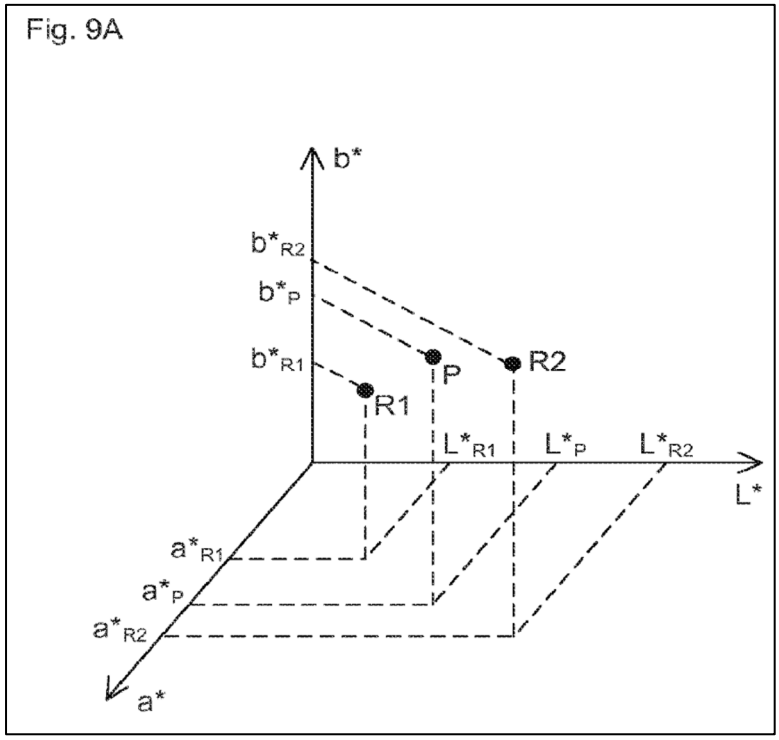

35. As shown in Figure 9A above, "the color data of the digital 3D representation and the known color values of the reference tooth shades are expressed in the L*a*b* color space, and the reference tooth shade are those from the VITA classical shade guide." *See id.* at col. 18:1-5. "The color data of these reference shades can be provided by scanning the corresponding pre-manufactured teeth of the shade guide." *See id.* at col. 18:8-10. Figure 9A shows only the two closest reference tooth shades within the L*a*b* color space, denoted as reference values R1 and R2. *See id.* at col. 18:27-29. To determine the reference tooth shade value corresponding to point P, "[i]t can be seen that the Euclidean distance in the

color space from P to R2 is the smallest, and the tooth shade in point P is hence selected as that of R2." *See id.* at col. 18:29-32.

36. The '151 Patent further discloses the use of a certainty score that is "determined for a point P depend[ing] on how close the color data of the point P is to the known color value of the selected reference tooth shade value. This can be quantified by the Euclidian distance and since the point P is not particularly close to R2 in FIG. 9A the determined tooth shade has a poor certainty score." *See id.* at col. 18:33-38.

B. Prosecution History

37. The application that became the '151 Patent was filed on February 5, 2018. The PTO issued the first office action on September 20, 2019. In that office action, the examiner rejected pending claims 1-3 and 10-13 as obvious over U.S. Patent No. 8,532,355 to Quadling in further view of U.S. Patent No. 8,570,530 to Liang. The examiner further objected to pending claims 4-9 and 14-18 as depending from rejected claims but noted that these claims would otherwise be allowable if rewritten in independent format. The examiner also issued a double patenting rejection against all claims based upon an earlier filed and granted application that resulted in U.S. Patent No. 10,010,387, from which the '151 Patent claims priority.

38. In response, the applicant incorporated the following limitation from original claim 4 into pending claim 1 to gain allowance of that claim:

> wherein the method comprises deriving a certainty score expressing the certainty of the determined tooth shade value.

See Ex-1002 at 35 (Office Action Response, Dec. 16, 2019). In addition, the applicant re-wrote pending claims 14 and 15 to be in independent format, amending both of those claims to add the elements and limitations of original claim 1 as well as any intervening claims.

39. The applicant also filed a terminal disclaimer to address the double patenting rejection.

40. On February 25, 2020, the examiner issued a notice of allowance, and the application issued as the '151 Patent on June 30, 2020.

VI. LEGAL PRINCIPLES USED IN ANALYSIS

41. I am not an attorney, and I offer no opinions on the law. I have been advised by Petitioner's counsel of certain legal principles relevant to an invalidity analysis, as summarized below. I have conducted my analysis in accordance with these principles.

A. Prior Art

42. I understand that a patent or other publication must qualify as prior art before it can be used to invalidate a patent claim.

43. I understand that for applications filed after the America Invents Act, such as the application that became the '151 Patent, a U.S. or foreign patent qualifies as prior art to a challenged claim if the patent was filed prior to the earliest priority date of the challenged claim. I also understand that a U.S. or foreign patent or published patent application qualifies as prior art to a challenged claim if it was filed or published before the earliest priority date of the challenged claim.

B. Anticipation

44. I understand that a prior art reference "anticipates" an asserted claim, thereby rendering the claim invalid, if all elements of the claim are disclosed in the reference, either expressly or inherently. I understand that an element is disclosed inherently in a prior art reference if it is necessarily present in the prior art reference or is the natural result flowing from the disclosure of the prior art reference. I have been informed that a prior art reference does not need to use the same words as the challenged claim in order to anticipate the claim.

C. Obviousness

45. I also understand that a patent is invalid if the differences between the claimed subject matter and the prior art are such that the subject matter as a whole would have been obvious to a person of ordinary skill in the pertinent art at the time the invention was made. I understand that a POSITA provides a reference point from which the prior art and claimed invention should be viewed. This reference

point prevents one from using his or her own personal insight or hindsight in deciding whether a claim is obvious.

46. I understand that an obviousness determination includes the consideration of various factors, such as (1) the scope and content of the prior art, (2) the differences between the prior art and the asserted claims, (3) the level of ordinary skill in the pertinent art, and (4) the existence of secondary considerations such as commercial success, long-felt but unresolved needs, failure of others, etc.

47. I understand that an obviousness evaluation can be based on a combination of multiple prior art references. I understand that the prior art references themselves may provide a suggestion, motivation, or reason to combine, which does not need to be explicit. I further understand that any need or problem known in the field and addressed by the patent can provide a reason for combining the elements in the manner claimed. To determine whether there was an apparent reason to combine the known elements in the way a patent claims, I have been informed that I may look to interrelated teachings of multiple patents, to the effects of demands known to the relevant community or present in the marketplace, and to the background knowledge possessed by a POSITA. I also understand that practical and common-sense considerations should guide a proper obviousness analysis because familiar items may have obvious uses beyond their primary purposes. I

further understand that a POSITA looking to overcome a problem will often be able to fit together the teachings of multiple publications. I understand that an obviousness analysis therefore accounts for the inferences and creative steps that a POSITA would employ under the circumstances.

48. I understand that the nexus linking two or more prior art references can also be simple common sense. I further understand that the obviousness analysis recognizes that market demand, rather than scientific literature, often drives innovation, and that a motivation to combine references may be supplied by the direction of the marketplace.

49. I understand that if a technique has been used to improve one device, and a POSITA would recognize that it would improve similar devices in the same way, using the technique is obvious unless its actual application is beyond his or her skill.

50. I understand that a particular combination may be proven obvious merely by showing that it was obvious to try the combination. For example, when there is a design need or market pressure to solve a problem and there are a finite number of identified, predictable solutions, a POSITA has good reason to pursue the known options within his or her technical grasp because the result is likely not the product of innovation, but of ordinary skill and common sense.

51. I understand that the combination of familiar elements according to known methods is likely to be obvious when it does no more than yield predictable results. When a work is available in one field of endeavor, design incentives and other market forces can prompt variations of it, either in the same field or a different field. If a POSITA can implement a predictable variation, the patent claim is likely obvious.

52. As noted above, I understand that a proper obviousness analysis focuses on what was known or obvious to a POSITA, not just the patentee. Accordingly, I understand that any need or problem known in the field of endeavor at the time of invention and addressed by the patent can provide a reason for combining the elements in the manner claimed.

53. I understand that a claim can be obvious in light of a single reference, without the need to combine references, if the elements of the claim that are not found explicitly or inherently in the reference can be supplied by the common sense or knowledge of one of skill in the art.

54. I also understand that secondary indicia of non-obviousness may include: (1) a long-felt but unmet need in the prior art that was satisfied by the invention of the patent; (2) commercial success of processes covered by the patent; (3) unexpected results achieved by the invention; (4) praise of the invention by others

skilled in the art; (5) taking of licenses under the patent by others; (6) deliberate copying of the invention; (7) failure of others to find a solution to the long-felt need; and (8) skepticism by experts.

55. I also understand that there must be a relationship between any such secondary considerations and the invention. I further understand that contemporaneous and independent invention by others is a secondary consideration supporting an obviousness determination.

56. I further understand that an obviousness determination does not require an actual, physical substitution of elements from multiple references. Instead, the criteria is whether the claimed inventions are rendered obvious by the teaching of the prior art of the whole, not whether the references could be physically combined.

57. In sum, it is my understanding that prior art teachings are properly combined where a POSITA—having the understanding and knowledge reflected in the prior art and being motivated by the general problem facing the inventor—would have been led to make the combination of elements recited in the claims. Under this analysis, the prior art references themselves, or any need or problem known in the field of endeavor at the time of the invention, can provide a reason for combining the elements of multiple prior art references in the claimed manner.

D. Claim Construction

58. I understand that, before an invalidity analysis can be performed, the scope and meaning of the challenged claims must be determined. It is my understanding that this is accomplished through the process of claim construction.

59. I have been informed and understand that claims are generally construed from the perspective of a POSITA at the time of the invention, which I have been asked to assume is the '151 patent's priority date of February 7, 2014. More specifically, I understand that the claims should be afforded a meaning in accordance with the ordinary and customary meaning of the claim, as understood by a POSITA at the time of the invention.

60. I have been advised that, in construing a claim term, one must first look to the "intrinsic" patent evidence, which includes the claims themselves, the patent specification, and the prosecution history of the patent. I have also been informed that "extrinsic" evidence, which is outside the patent and prosecution history, may be useful in construing patent claims. It is my understanding that such extrinsic evidence may include dictionaries, textbooks, treatises, and similar sources of information.

61. I have been advised that a claim may recite a function to be performed rather than a structure for performing the function. I have been informed that such

claim terms are known as "means-plus-function" claim terms. I understand that a term introduced by the phrase "means for" is presumed to be a means-plus-function claim term. I have also been informed that a claim term may be construed as a means-plus-function term where it fails to recite sufficiently definite structure, or else recites function without reciting sufficient structure for performing that function.

62. I have been advised that the construction of a means-plus-function claim term is a two-step process. I understand that the first step requires an identification of the function recited in the claim. I understand that the second step requires determining what structure is disclosed in the specification for performing the recited function. I have been advised that a structure disclosed in the patent specification qualifies as corresponding structure if the intrinsic evidence clearly links or associates that structure to the function recited in the claim. I have been advised that the proper construction for a means-plus-function term is restricted to the corresponding structure identified in the specification and equivalents thereof.

63. I understand that claims must be construed in an *inter partes* review using the same claim construction standard that would be used to construe the claim in a civil action before a district court.

64. I also understand that at least some of the terms in the '151 Patent are subject to a claim construction decision in the District Court proceeding *3Shape A/S*

v. Medit Corp., Case No. 6:22-cv-00443-ADA-DTG, in the Western District of Texas. To the extent necessary, I will reference these claim constructions in my opinion.

VII. LEVEL OF ORDINARY SKILL IN THE ART

65. My opinions have been guided by my appreciation of how a POSITA (described below) would have understood the claims of the '151 Patent as of the invention date, which I have been asked to assume is the patent's priority date, February 7, 2014.

66. It is my understanding that a POSITA is one who is presumed to be aware of all pertinent art and is a person of ordinary creativity. I further understand that the following factors may be considered in establishing the level of ordinary skill in the art in the relevant field: the type of problems encountered in the art; the prior art solutions to those problems; the rapidity with which innovations are made; sophistication of the technology; and the educational level of active workers in the field.

67. It is further my understanding that the PTAB has previously used the following definition of a POSITA in a prior proceeding involving the '151 Patent: one having "at least a bachelor's degree in Computer Engineering, Computer Science, Computer Vision, or an equivalent field, as well as at least two years of

imaging/image analysis experience, or alternatively, at least six years of comparable industry experience." *See* Ex-1008 at 8-9. This definition seems reasonable to me, and I will use it in my analysis.

68. As shown in my CV, I qualify as a POSITA based both on the education criteria and on the industry-experience criteria.

VIII. CLAIM CONSTRUCTION

69. I have set forth my understanding of relevant claim construction principles above, which I have followed in my analysis. I understand that certain claim terms in the '151 Patent were construed by the District Court in the litigation between the two parties, 3Shape and Medit. As indicated in my analysis below, I have acknowledged the District Court's claim constructions in arriving at my opinions. In particular, the District Court construed the term "deriving a certainty score" to mean "determining an accuracy value based on the tooth shade value, the texture data, and/or texture information," the claim construction that patent owner advanced. I have used this construction in my analysis below.

70. Regardless of which construction is used for this claim element – patent owner's or petitioner's – my analysis would be very similar, and my opinion would be the same.

71. For the remaining claim terms, I have used the plain and ordinary meaning, consistent with the ruling in the District Court proceeding.

IX. OVERVIEW OF THE PRIOR ART

72. I provide below an overview of the various prior art references that are the subject of my declaration.

A. Korten (U.S. Patent No. 10,028,810)

73. United States Patent No. 10,028,810 to Korten, titled "Method of Capturing Data from a Patient's Dentition and System for Performing Such Method," issued on July 24, 2018, and has a PCT filing date of April 24, 2014. *See* Ex-1009 (hereinafter "Korten"), elements (12), (22). Korten further claims priority to a European Patent Application 13165808, having a priority date of April 29, 2013. I understand that Korten qualifies as prior art as to the '151 Patent.

74. Korten discloses technology that "allows for capturing the shape and for measuring the color in independent steps and for providing a correlation between the captured shape and the location at which the color is measured." *See* Korten at col. 1:9-13. Korten discloses that data from a patient's dentition may be captured through the following steps:

- "positioning a first optical sensor relative to [*sic*] patient's dentition";

- "capturing . . . at least a portion of the shape of a tooth in the patient's dentition and based thereon providing a first virtual dentition model representing that shape in a three-dimensional coordinate system";
- "measuring a first color at a first location on the tooth portion"; and
- "providing a correlation between the first location of the first color and a coordinate in the first virtual dentition model."

75. The following figure from Korten shows a system 10 that "can be used to capture via the first optical sensor the shape of one or more teeth in the patient's dentition 500":

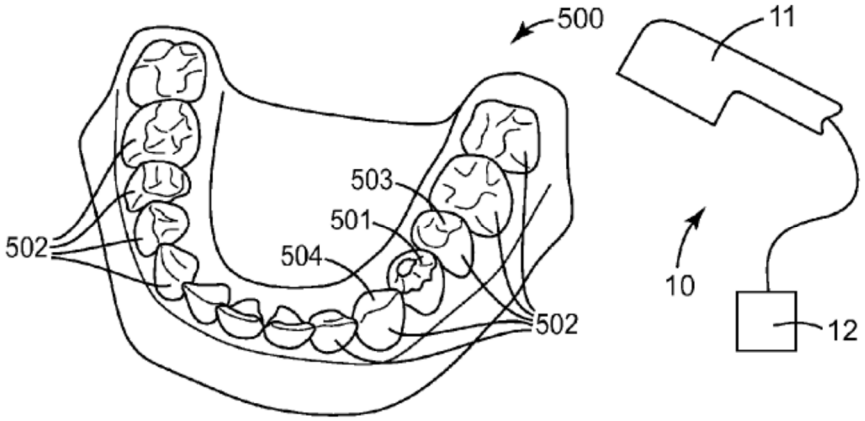

FIG. 1

Id. at col. 7:64-66. Further, "[t]he system 10 is adapted such that it can provide—based on the captured shape—a first virtual dentition model representing that shape in a three-dimensional coordinate system." *See id.* at col. 7:66-8:2. According to

Korten, the shape data may be in the format of X, Y, and Z coordinates. *See id.* at col. 4:48-56.

76. In contrast to traditional point-and-click technology, Korten discloses the capture of "continuous 3D video images" that are used to "create a digital impression used for the fabrication of CAD/CAM dental restorations." *See id.* at col. 4:34-37. Korten also discloses that a number of commercial scanners can be used to generate the 3D model. *See id.* at col. 4:27-31.

77. Korten further discloses that "[t]he system 10 is further adapted to measure a color at the patient's dentition." *See id.* at col. 8:5-6. According to Korten, "[t]he system is preferably used to capture at least a portion of the shape of a tooth, for example one of the healthy teeth 502, in the patient's dentition 500 and to measure a first color at a first location on that tooth portion." *See id.* at col. 8:10-13. The color measurement in Korten may include color data for a tooth adjacent to the prepared tooth so that the dental restoration will include "a color that fits the color of the adjacent tooth or teeth (503/504)." *See id.* at 8:14-20.

78. Korten also discloses that the color measurement is associated with "at least one coordinate in the first virtual dentition model based on the correlation between the first location of the first color and the coordinate in the first virtual dentition model." *See id.* at col. 4:41-45. Thus, "[t]he shape data and color data are

preferably subsequently correlated such that particular measured colors are brought into association with particular coordinates or locations in the corresponding first virtual dentition model of the tooth portions of which the color were [*sic*] measured." *See id.* at col. 8:34-39. According to Korten, "[s]uch a method preferably provides for precise color measuring including determination of location information of measured colors associated with the patient's dentition." *See id.* at col. 8:41-44.

79. As described in Korten, such correlation may be provided by a handpiece that includes two sensors – one for determining shape data and the other for determining color information. *See id.* at col. 9:14-45. In this implementation, "the correlation between the location at which the color is measured and the coordinate in the first virtual dentition model can be derived from the known positional relationship of the first and second sensor unit." *See id.* at col. 9:28-32.

80. Korten also discloses "the step of matching at least the first color with a standard color from a standard color scheme." *See id.* at col. 5:28-30. As noted above, the "first color" corresponds to the color obtained for the first location, or point, on the patient's tooth. *See supra*, ¶78 (noting a "correlation between the first location of the first color and the coordinate in the first virtual dentition model" (*citing id.* at col. 4:41-45.)). According to Korten, "[s]uch a standard color scheme may for example correspond to the widely used VITAPAN™ Classical tooth color

scheme which typically provides the different tooth colors: A1, A2, A3, A3.5, A4, B1, B2, B3, B4, C1, C2, C3, C4, D2, D3 and D4." *See id.* at col. 5:30-34.

81. In addition, Korten discloses "measuring a second color at a second location on the same tooth or a further tooth in the patient's dentition, the second location being different from the first location." *See id.* at col. 5:9-11. As part of this process, the first optical sensor may capture "the shape of that further tooth and based thereon updating the first virtual dentition model by the shape of the further tooth." *See id.* at col. 5:14-16. Further, "[t]he measured colors may be mapped relative to the first virtual dentition model at coordinates which correspond to the location at the dentition." *See id.* at col. 5:24-27.

82. As a result, in this implementation, "the first virtual dentition model 1000 represents different tooth colors 1011, 1012, 1013 and 1014 of the first tooth 1010 and different tooth colors 1021, 1022, 1023 and 1024 on a second tooth 1020. . . . The colors are measured at location of the patient's tooth which correspond to the locations in the first virtual dentition model 1000." *See id.* at col. 10:37-43. The determination of different colors for different portions of a tooth may be used when building up the dental restoration such that the dental restoration may be comprised of different color shades. *See id.* at col. 10:65-11:7.

B. Lehmann I (U.S. Patent No. 6,206,691)

83. United States Patent No. 6,206,691 to Lehmann, titled "System and Methods for Analyzing Tooth Shades," issued on March 27, 2001, and has a filing date of October 4, 1999. *See* Ex-1010 (hereinafter "Lehmann I"), elements (12), (22), (45). I understand that Lehmann I qualifies as prior art to the '151 Patent.

84. Lehmann I discloses technology "for tooth shade determination using digital signal processing" in which color images of one or more teeth are analyzed and compared to known tooth shades for use in certain clinical or cosmetic procedures. *See* Lehmann I, col. 1:16-21. Much like Korten, Lehmann I notes the deficiencies in the traditional method of matching tooth shade by attempting to "eyeball" the shade of various reference tooth shade tabs to find the closest match. *Id.* at col. 1:50-59. Lehmann I also identifies and discusses some of the same reference tooth shade guides, such as the VITA shade guide, as mentioned in Korten.

85. According to Lehmann I, a solid state camera is used to capture a digital image of a each known conventional tooth shade. *See id.* at col. 5:5-8. As described in Lehmann I and as is well known in the art, the digital image is comprised of a number of pixels, in which each pixel "represent[s] the light intensity and color properties of a given spatial location on the tooth." *See id.* at 5:21-25. It is clear from reviewing Lehmann I that the term "spatial location" refers to a point because

Lehmann notes a process for measuring the *distance* between adjacent pixels. *Id.* at 5:25-26. If the term "adjacent pixels" referred to discrete areas that abutted one another, there would be no need to measure the distance between them because that distance would be zero. By describing the distance between pixels, Lehmann I makes clear that the "spatial location" of a pixel refers to a point.

86. According to Lehmann I, each reference image is processed so that a group of pixels covering a specific area of a tooth is identified, called a pseudo-pixel[2], and the intensity and color associated with the pseudo-pixel are computed. *See id.* at cols. 5:50-6:18. The intensity and color "are computed or otherwise formed as an average (or other statistical measure) of the actual pixels forming the pseudo-pixel." *See id.* at 6:15-18. Lehmann I then describes that a Reference Image for the reference tooth shade "is generated as an average (or other statistical measure) of the Pseudo-Image series of images," for example, of the VITA A2 shade guide. *See id.* at col. 7:3-6.

87. According to Lehmann I, "an actual digital image of a patient's tooth" is taken, which is called a Snapshot. *See id.* at col. 7:39-47. The "Snapshot can be scaled to approximate the Reference Image size, or vice versa," and/or "the Snapshot

[2] More recent literature also refers to this concept as a "superpixel."

can also be processed into pseudo-pixels," resulting in a Real Image. *See id.* at cols. 7:50-53; 9:15-19. The "Real Image is compared (i.e., correlated) to each Reference Image in the database" using a correlation algorithm. *See id.* at col. 9:30-35. This correlation results in a composite match number ("CMN") that "indicat[es] how well the Real Image matches to that Reference Image. The composite match numbers are compared to one another and one of the Reference Images is selected as the 'best fit' match to the Real Image." *See id.* at col. 9:37-42.

C. Lehmann II (U.S. Patent Appl. Publ. No. 2011/0188086)

88. United States Patent Application No. 2011/0188086 to Lehmann, titled "Tooth Shade Analyzer System and Methods," published on August 4, 2011, and has a filing date of April 11, 2011. *See* Ex-1011 (hereinafter "Lehmann II"), elements (54), (22), (43). I understand that Lehmann II qualifies as prior art as to the '151 Patent.

89. Lehmann II relates to technology "for determining a patient's tooth shade comprising the steps of electronically imaging a patient's tooth to obtain an image which includes color information representative of tooth color; determining the patient's tooth color from the color information of the image; and displaying the determined tooth color to identify one or more tooth shades having a combined color corresponding to the determined tooth color." *See* Lehmann II at para. [0011].

90. According to Lehmann II, "[t]he identification of tooth shade(s) is generally made by comparing the determined tooth color to a plurality of electronically stored tooth shades." *See id.* at para. [0013]. The system in Lehmann II "associates one or more of the plurality of tooth shades with at least one standardized shade" by comparing "the chromaticities and RGB representations" of the tooth color and the reference teeth. *See id.*, at paras. [0044]-[0045]. Lehmann II describes the same types of reference tooth shade guides as disclosed in Korten and Lehmann I. *See, e.g., id.* at para. [0058] (disclosing Vita shade guide).

91. According to Lehmann II, color data can be obtained on a per pixel basis (*see, e.g., id.*, para. [0066]) or "the image of the tooth 60 can be averaged over a selected area by selecting a particular region for which color imagery is averaged." *See id.* at para. [0067]. "For example, if the tooth 60 is to be averaged over the two pixels identified by the outline 68, then the subsystem 29 averages the two RGB values and specifies the tooth shade match in block 42b as an average of the two." *See id.*

92. Lehmann II further discloses that "[i]n a preferred embodiment the method further comprises displaying the color information of the tooth and that which is representative of the tooth shades on a monitor for visual comparison." *See id.* at para. [0017]. In addition, "the color information of the patient's tooth is

compared with the stored color information relating to the tooth shades by a computer. The color information of the patient's tooth may be compared to the plurality of tooth shade guides on a pixel-by-pixel basis." *See id.* "Advantageously, the system further comprises a monitor for simultaneously displaying color information of the tooth and tooth shade information so that visual comparisons can be made." *See id.* at para. [0022].

93. For example, Lehmann II discloses a monitor 44' and subsystem 34' that can be used to display the image of a tooth:

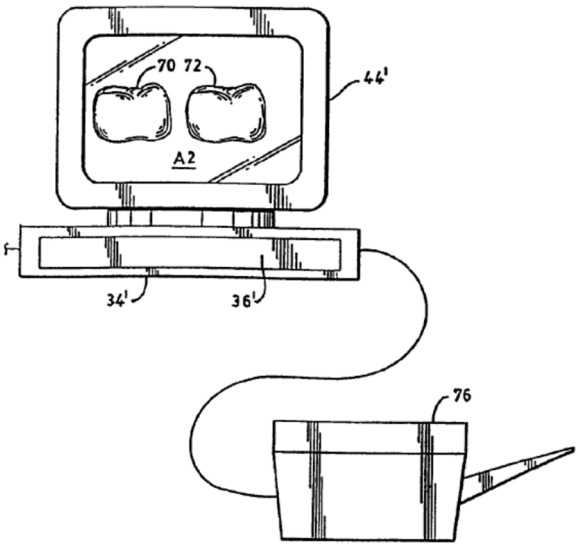

FIG. 7

See id., Fig. 7. "In the illustrated embodiment, an image 70 of a patient's tooth is matched to the appropriate shade, as above, and then an image 72 of the matched shade is also displayed on the monitor 44'. The system 34' further generates and

displays the tooth shade identifying match, e.g., 'A2,' on the screen 44' so that the ordering information about the tooth reconstruction is easily ascertained." *See id.* at para. [0068].

D. Pye (U.S. Patent No. 7,341,450)

94. United States Patent No. 7,341,450 to Pye, titled "Tooth Shade Scan System and Method," published on April 7, 2005, and has a filing date of October 3, 2003. *See* Ex-1012 (hereinafter "Pye"), elements (45), (22), (65). I understand that Pye qualifies as prior art as to the '151 Patent.

95. Pye discloses technology related to "tooth shade analysis tools." *See id.* at col. 5:6-7. According to Pye, "tooth shade scan systems and methods are provided in which shade information for a restorative product for a patient's tooth is obtained." *See id.* at col. 2:44-46. "The system may capture image information for a patient's tooth and compile the image information to a database of shade guide information." *See id.* at col. 2:46-48.

96. Pye further discloses the use of dividers that may be used to "divide the tooth into regions of interest or into regions that correspond to major tooth regions (e.g., the incisal, central, etc.)." *See id.* at col. 2:49-53. The user can move the dividers allowing "the operator to identify the appropriate regions for which corresponding information is available from a database of shade guide information."

See id. at col. 2:54-58. As Pye further explains, "[t]he dividers allow the operator to identify two or more regions depending on the number and shape of the lines at the same time." *See id*. at col. 2:63-65. Further, display equipment may be used to "view an image of a patient's tooth and to view and use shade analyzing software features." *See id.* at col. 4:44-46. The patient's tooth may be broken into separate regions, as illustrated by the following diagram:

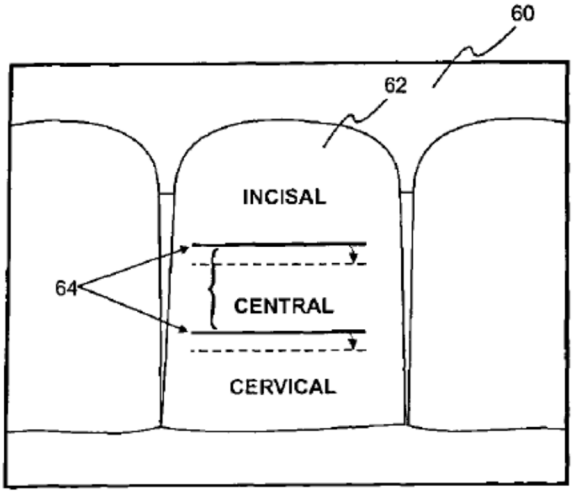

See id., Fig. 5.

97. As disclosed in Pye, "a shade analyzing system is illustratively shown in FIG. 2" in which "shade analyze system 30 may include sufficient hardware and software for identifying shade information for a patient's tooth from a shade guide." Such a system may include "[h]andheld imaging equipment" that "may be imaging equipment that is used to capture shape and color information for a patient's tooth." *See id.* at col. 5:35-39.

E. Babayoff (U.S. Patent No. 7,698,068)

98. United States Patent No. 7,698,068 to Babayoff, titled "Method for Providing Data Associated with the Intraoral Cavity," published on December 22, 2005, and has a filing date of June 17, 2005. *See* Ex-1013(hereinafter "Babayoff"), elements (54), (22), (65). Babayoff issued as a patent on April 13, 2010. *See id.*, element (45). I understand that Babayoff qualifies as prior art to the '151 Patent.

99. The technology disclosed in Babayoff is directed toward manipulating 3D entities representative of tissues, in particular of the intraoral cavity, so as to provide useful data in procedures involving dental surfaces. *See id.* at col. 1:16-21. Babayoff discloses a system that obtains a 3D color numerical entity of an intraoral cavity. *See id.* at col. 8:23-24. This system includes a device that has detection optics 60, main optics 41, and an image processor 24:

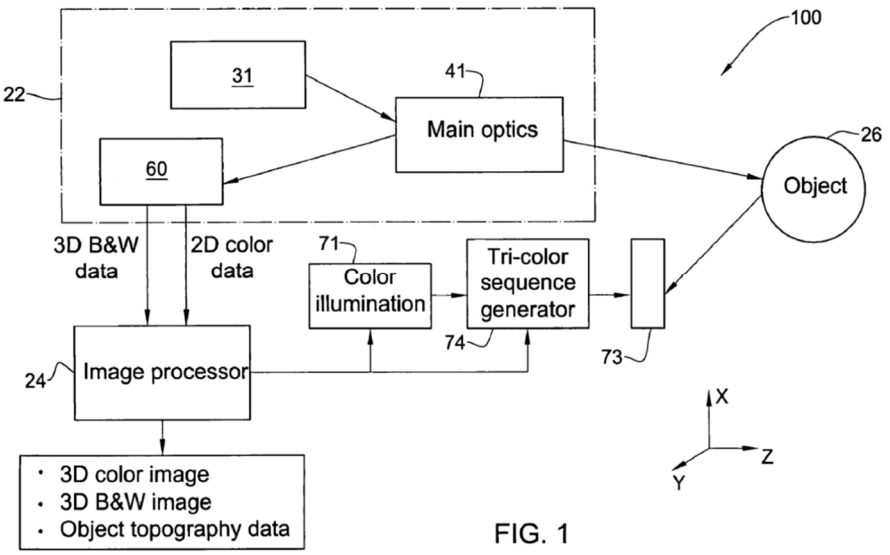

FIG. 1

See id., Fig. 1; col. 8:39-44. To obtain a 3D, manipulable image, "[t]he detection optics 60 receives image data from the main optics 41 and the image processor 24 determines the depth Z values for each X-Y point illuminated on the object 26 based on this image data." *See id.*

100. According to Babayoff, "[t]he device 100 further comprises color illuminating means, such as for example a tri-color sequence generator 74, for selectively illuminating the object 26 with suitable colors, typically Green, Red and Blue, and for each such monochromatic illumination, a two dimensional image of the object 26 is captured by the detection optics 60." *See id.* at col. 8:45-50. "The device 100 is configured for providing color data for an array of X-Y points that is according to the same frame of reference as the X-Y array used for obtaining the 3D entity." *See id.* at col. 8:53-56. Babayoff further discloses aligning "the 2D color image with the 3D entity previously created, and then provid[ing] color values to this entity by mapping color values to the entity at aligned X-Y points." *See id.* at col. 8:57-60.

101. According to Babayoff, in certain instances, it might be necessary to obtain a 3D definition of a large area of the intraoral cavity, which might require multiple scans that are then "stitched" together. *See id.* at col. 2:1-5. In these cases, common structures on the hard surfaces (*e.g.*, the tooth surfaces) may be readily

identified, which will aid in the stitching process. *Id.* at col. 2:5-16. "However, the data sets often include surface data relating to the soft tissues such as gums, cheeks and tongue, for example, which may distort and move while the different scans are performed," such that stitching together these types of surfaces becomes "problematic." *See id.* at col. 2:16-23.

102. To address this issue, Babayoff discloses a method in which the color data for each point in the entity is "compared with at least one color criterion, and typically with at least two color ranges R_1, R_2" that each "represent the values of the color parameter expected for one or another of the two tissues, such as the teeth and gums." *See id.* at col. 21:23-28. The data points for the entity "are sorted into at least two sub-data sets I_1, I_2, according to the color criteria, that is, for example, whether the value of the color parameter of each data point is within R_1 or R_2, respectively." *See id.* at col. 22:22-25. In this way, once the hard, tooth surfaces of the entity have been identified and isolated, "the new entity may be further manipulated as desired." *See id.* at col. 22:47-50.

103. In addition, Babayoff discloses a method for combining the color data from the various "sub-entities." According to Babayoff, "transformed sub-entities are combined to a single transformed sub-entity, wherein color data corresponding to said plurality of numerical sub-entities . . . are combined in a predetermined

manner." *See id.* at 5:60-64. Babayoff further discloses that "[s]uch a predetermined manner comprises averaging the color value at each corresponding data point of said plurality of numerical sub-entities," and optionally, weight averaging the color value at each corresponding data point of said plurality of numerical sub-entities." *See id.* at cols. 5:64 – 6:2.

X. THE PRIOR ART INVALIDATES ALL OF THE CLAIMED ELEMENTS OF THE '151 PATENT

104. I provide below my analysis and opinion regarding the validity, or lack thereof, of various claims of the '151 Patent in light of the disclosures in the prior art references discussed above.

A. Ground 1: Claims 1, 12, 14, 15 Are Anticipated by Korten

105. In my opinion, claims 1, 12, 14, and 15 are anticipated by the disclosures in Korten. In this section, I provide my analysis for each claim, showing how each element of the claims is disclosed in Korten.

1. Claim 1 Is Anticipated

106. As explained below, it is my opinion that Korten anticipates claim 1.

a. [1Pre] A method for determining shade of a patient's tooth, wherein the method comprises:

107. I have been informed that the preamble of claim 1 is not limiting. Nevertheless, it is my opinion that Korten teaches this limitation. Korten teaches a method for determining the shade of a patient's tooth. For example, Korten discloses

technology that "allows for capturing the shape and for measuring the color in independent steps and for providing a correlation between the captured shape and the location at which the color is measured." *See* Korten at col. 1:9-13. Such color data can be used to determine the shade of a patient's tooth.

108. For example, Korten discloses "the step of matching at least the first color with a standard color from a standard color scheme." *See id.* at col. 5:28-30. According to Korten, "[s]uch a standard color scheme may for example correspond to the widely used VITAPAN™ Classical tooth color scheme which typically provides the different tooth colors: A1, A2, A3, A3.5, A4, B1, B2, B3, B4, C1, C2, C3, C4, D2, D3 and D4." *See id.* at col. 5:30-34.

b. [Claim 1a] Obtaining a digital 3D representation of the tooth, where the digital 3D representation comprises shape data and texture data for the tooth;

109. It is my opinion that Korten discloses this limitation. For example, Korten shows a system 10 that "can be used to capture via the first optical sensor the shape of one or more teeth in the patient's dentition 500":

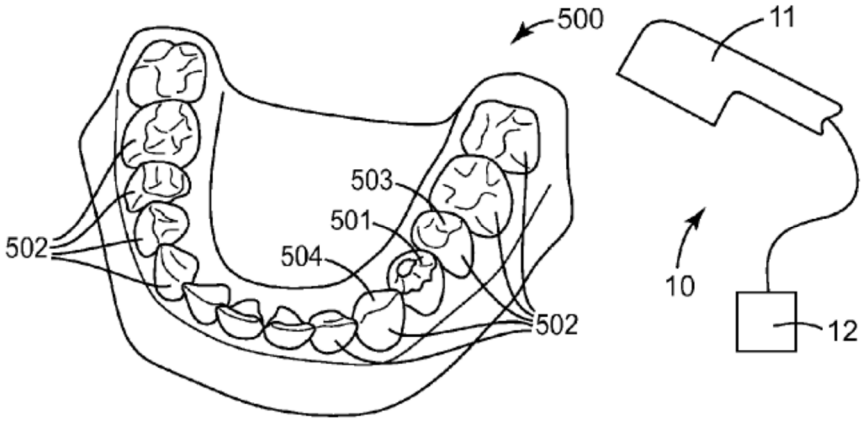

FIG. 1

Id., Fig. 1; col. 7:64-66. Further, "[t]he system 10 is adapted such that it can provide—based on the captured shape—a first virtual dentition model representing that shape in a three-dimensional coordinate system." *See id.* at col. 7:66-8:2. Thus, the system 10 in Korten measures shape data of the patient's dentition (i.e., arrangement or condition of the teeth). The shape data in Korten may include X, Y, Z coordinates. *See id.* at col. 4:48-56.

110. Korten also discloses that "[t]he system 10 is further adapted to measure a color at the patient's dentition." *See id.* at col. 8:5-6. Korten also discloses that the color measurement is associated with "at least one coordinate in the first virtual dentition model based on the correlation between the first location of the first color and the coordinate in the first virtual dentition model." *See id.* at col. 4:42-45. Thus, "[t]he shape data and color data are preferably subsequently correlated such that

particular measured colors are brought into association with particular coordinates or locations in the corresponding first virtual dentition model of the tooth portions of which the color were [*sic*] measured." *See id.* at col. 8:34-39 (emphasis added). According to Korten, "[s]uch a method preferably provides for precise color measuring including determination of location information of measured colors associated with the patient's dentition." *See id.* at col. 8:41-44.

111. It is my opinion that the method disclosed by Korten of combining the shape data, which includes three-dimensional (XYZ) coordinates, obtained by one sensor with the two-dimensional (XY) color data obtained by a second sensor overlaps with the method that Patent Owner has previously admitted can be used for determining color data for points on a tooth. In particular, in an earlier filing with the PTAB, Patent Owner described a particular prior art reference as "plac[ing] the color data in the same reference as the X-Y array used for the 3D model." *See* Ex-1016 at 27. Thus, by using the corresponding X-Y data to correlate the 3D shape data with the color data, Patent Owner described this system as "obtain[ing] color data for points on the tooth." *See id.* In my opinion, Korten associates color data with points on the tooth in the same manner.

112. Finally, the '151 Patent specifies that texture data may comprise color data. *See* Ex-1001 at col. 5:51 (describing "[w]hen the texture data comprises color

data . . .”). Thus, the color data described in Korten satisfies the “texture data” limitation in this element.

c. [Claim 1b] Determining a tooth shade value for at least one point on the tooth based on the texture data of the corresponding point of the digital 3D representation and on known texture values of one or more reference tooth shade values,

113. It is my opinion that Korten discloses this limitation. For example, Korten discloses “matching at least the first color with a standard color from a standard color scheme.” *See* Korten at col. 5:28-30. Korten makes clear that the reference to a “standard color” and “standard color scheme” refer to the standard tooth shade guides discussed above: “Such a standard color scheme may for example correspond to the widely used VITAPAN Classical tooth color scheme which typically provides the different tooth colors: A1, A2, A3, A3.5, A4, B1, B2, B3, B4, C1, C2, C3, C4, D2, D3 and D4.” *See id.* at col. 5:30-34.[3]

114. As noted in the previous section, Korten discloses that color data is captured on a point-by-point basis such that each captured XYZ location on the surface of the tooth will have color data that corresponds to that point on the tooth.

[3] Korten uses the term “standard color scheme” to refer to the tooth shade guides, and “standard color” to refer to tooth shades. For the sake of consistency, I will use the terms “tooth shade guide” and “tooth shade” throughout my declaration except where I am quoting Korten.

Thus, in my opinion, a POSITA would understand that Korten's reference to "the first color" in the statement above ("matching at least the first color with a standard color from a standard color scheme") corresponds to the first color obtained for a point on the tooth. Indeed, this relationship is even more explicit in the relevant disclosure in Korten because the reference to the "first color" corresponds to the color obtained for the first location, or point, on the patient's tooth. *See id.* at col. 4:43-45. (noting a "correlation between the first location of the first color and the coordinate in the first virtual dentition model."). Thus, based on this description, it is my opinion that Korten describes obtaining a tooth shade value for at least one point on the patient's tooth based on the color (*e.g.*, texture) data of the corresponding point of the digital 3D representation and the color data from the tooth shade guide.

d. [Claim 1c] Wherein the method comprises deriving a certainty score expressing the certainty of the determined tooth shade value.

115. It is my opinion that Korten discloses this limitation. As noted in the previous section, Korten discloses that the color data from the location on the patient's tooth may be compared to the standard color data from a reference tooth shade guide to find a matching reference tooth shade. *See also* Korten at col. 5:28-30 (describing "matching at least the first color with a standard color"). Korten

further describes that it is desirable to provide "precise color measuring," *see id.* at col. 8:41-44, and that the technology it describes is directed towards providing "for relatively precise color measuring" and "minimizing errors in color measurement." *See id.* at col. 2:13-23. Thus, in my opinion, a POSITA would understand the disclosure in Korten regarding "matching at least the first color with a standard color" to be referring to finding standard color from a reference tooth shade guide that most closely matches the first color. To make this determination, the system in Korten would need to compare the color data of the first color with each of the standard colors in a tooth shade guide to find the closest match. In fact, Korten discloses such a comparison. Korten, for example, discloses "comparing the measured first color with a reference color, and—depending on the degree of similarity or the match between the measured first color and the reference color—determining the validity of the measured first color." *See id.* at cols. 4:60-5:6. In my opinion, a POSITA would understand that the term "validity" corresponds to the claimed "certainty score" because the "validity" determination would provide a measurement of how close the first color is to the reference color. Indeed, Korten discloses that "[a] mismatch between the measured first color and the reference color may trigger a further method step of issuing an error signal," and that the limits for finding an acceptable mismatch "may be adjustable." *See id.* at cols. 5:2-6.

116. It is my understanding that Patent Owner has argued that the term "deriving a certainty score" means "determining an accuracy value based on the tooth shade value, the texture data, and/or texture information." The term "accuracy" refers to how close a value is with a reference value. *See* Ex-1007 at 2(b)[4] In my opinion, a POSITA would understand that the technology in Korten calculates a "certainty score" under this construction because it measures how accurately the standard color data for each standard tooth shade value matches the color data from the patient's tooth. The standard tooth shade value associated with the most accurate standard color data is chosen as the "matching" shade value. As part of this process, accuracy values must be calculated, and the accuracy values must be based on a comparison of the reference tooth shade values and the color values (*i.e.* texture values) for the teeth.

2. Claim 12 Is Anticipated

117. As explained below, it is my opinion that Korten anticipates claim 12.

118. Claim 12 recites: *The method according to claim 1, wherein the method comprises creating a shade profile for the tooth from shade values determined one or more points on the tooth.*

---

[4] Based on the widely accepted definition of "accuracy," my analysis would be the same if petitioner's claim construction were used ("calculating how close the texture data of the corresponding point is to the known texture value of a reference tooth shade value").

119. As noted previously, Korten discloses determining shade values for at least one point on a patient's tooth. *See supra* § X.A.1.c (Ground 1, discussion for element [Claim 1b]).

120. Korten further discloses "measuring a second color at a second location on the same tooth . . ." *See* Korten at col. 5:9-11. These additional, measured colors "may be mapped relative to the first virtual dentition model at coordinates which correspond to the location at the dentition." *See id.* at col. 5:24-27. The determination of different colors for different portions of a tooth may be used when building up the dental restoration such that the dental restoration may be comprised of different color shades. *See id.* at col. 10:65-11:7.

121. Korten further discloses determining standard tooth shade values for points on the patient's tooth that correspond to points in the 3D representation, by matching the texture data (e.g., the color data) obtained from the patient's tooth and the texture data (e.g., color data) associated with the various reference tooth shades. *See id.* at col. 5:30-34.

122. It is my understanding that Patent Owner has asserted that the term "tooth shade profile" take on its plain and ordinary meaning. *See* Ex-1003, at 3. It is my opinion that the disclosures in Korten, which teaches that tooth shade information be obtained at multiple points along the tooth, satisfies this plain and

ordinary meaning. Accordingly, it is my opinion that Korten discloses "wherein the method comprises creating a shade profile for the tooth from shade values determined one or more points on the tooth."

3. Claim 14 Is Anticipated

123. As explained below, it is my opinion that Korten anticpates claim 14.

a. [14Pre] A method for determining shade of a patient's tooth, wherein the method comprises:

124. As noted above, Korten discloses this limitation to the extent it is limiting. *See supra* § X.A.1.a (discussion for element [Claim 1Pre]).

b. [Claim 14a] Obtaining a digital 3D representation of the tooth, where the digital 3D representation comprises shape data and texture data for the tooth;

125. As noted above, Korten discloses this limitation. *See supra* § X.A.1.b (discussion for element [Claim 1a]).

c. [Claim 14b] Determining a tooth shade value for at least one point on the tooth based on the texture data of the corresponding point of the digital 3D representation and on known texture values of one or more reference tooth shade values,

126. As noted above, Korten discloses this limitation. *See supra* § X.A.1.c (discussion for element [Claim 1b]).

d. [Claim 14c] wherein obtaining the digital 3D representation of the tooth comprises recording a series of sub-scans of the tooth, where at least one of said sub-scans comprises both texture information and

> **geometry information for said tooth, and generating the digital 3D representation of the tooth from the recorded series of sub-scans.**

127. It is my opinion that Korten discloses this limitation. For example, Korten discloses "measuring a second color at a second location on the same tooth or a further tooth in the patient's dentition, the second location being different from the first location." *See* Korten at col. 5:9-11. As part of this process, the first optical sensor may capture "the shape of that further tooth and based thereon updating the first virtual dentition model by the shape of the further tooth." *See id.* at col. 5:14-16. Further, "[t]he measured colors may be mapped relative to the first virtual dentition model at coordinates which correspond to the location at the dentition." *See id.* at col. 5:24-27.

128. The capture of the first location corresponds to the first subscan in this claim limitation, and the capture of shape and color data associated with the second location correspond to the second subscan. By incorporating the shape and color data from the second subscan into the location coordinates determined for the first scan, the disclosed system in Korten generates the 3D representation using this series of subscans.

4. Claim 15 Is Anticipated

129. As explained below, it is my opinion that Korten anticipates claim 15.

130. Claim 15 recites: *The method according to claim 14, wherein the texture data at least partly are derived by combining the texture information from corresponding parts of a number of the sub-scans.*

131. It is my opinion that Korten discloses this limitation. For example, Korten discloses "measuring a second color at a second location on the same tooth or a further tooth in the patient's dentition, the second location being different from the first location." *See* Korten at col. 5:9-11. As part of this process, the first optical sensor may capture "the shape of that further tooth and based thereon updating the first virtual dentition model by the shape of the further tooth." *See id.* at col. 5:14-16. Korten further discloses that "colors may be measured on the same tooth or further teeth and the first virtual dentition model may be further updated by the shape of any further teeth. Thus, the entire dentition or the entire upper or lower jaw may be captured in shape and ***a plurality of colors*** may be measured thereon. The measured colors may be mapped relative to the first virtual dentition model at coordinates which correspond to the location at the dentition." *See id.* at col. 5:19-27.

132. Accordingly, because the second (and further) colors are mapped into the first virtual dentition, it is my opinion that Korten discloses "wherein the texture

data at least partly are derived by combining the texture information from corresponding parts of a number of the sub-scans.

B. Ground 2: Claims 1, 2, 4, 5, 9, 12-16 Are Rendered Obvious by Korten in View of Lehmann II

133. In my opinion, claims 1, 2, 4, 5, 9, and 12-16 are rendered obvious by the disclosures in Korten in view of the further disclosures in Lehmann II. In this section, I provide my analysis for each claim, showing how each element of the claims is disclosed in one or both of these references. At the end of each claim, where appropriate, I provide my opinion that a POSITA would have more than sufficient motivation to combine the relevant disclosures from Lehmann II into the system described by Korten.

1. Claim 1 Is Rendered Obvious

134. As explained below, it is my opinion that Korten in view of Lehmann II teaches, and therefore renders obvious, every element of claim 1.

a. [1Pre] A method for determining shade of a patient's tooth, wherein the method comprises:

135. As noted above, Korten discloses this limitation. *See supra* § X.A.1.a (Ground 1, discussion for element [Claim 1Pre]).

b. [Claim 1a] Obtaining a digital 3D representation of the tooth, where the digital 3D representation comprises shape data and texture data for the tooth;

136. As noted above, Korten discloses this limitation. *See supra* § X.A.1.b (Ground 1, discussion for element [Claim 1a]).

c. [Claim 1b] Determining a tooth shade value for at least one point on the tooth based on the texture data of the corresponding point of the digital 3D representation and on known texture values of one or more reference tooth shade values,

137. It is my opinion that Lehmann II discloses this limitation. According to Lehmann II, "[t]he identification of tooth shade(s) is generally made by comparing the determined tooth color to a plurality of electronically stored tooth shades." *See* Lehman II at para. [0013]. The system in Lehmann II "associates one or more of the plurality of tooth shades with at least one standardized shade" by comparing "the chromaticities and RGB representations" of the tooth color and the reference teeth. *See id.*, at paras. [0044]-[0045]. Lehmann II further discloses that "[t]he color information of the patient's tooth may be compared to the plurality of tooth shade guides on a pixel-by-pixel basis." *See id.* at [0017]. Accordingly, it is my opinion that Lehmann II also discloses "determining a tooth shade value for at least one point on the tooth based on the texture data of the corresponding point of the digital 3D representation and on known texture values of one or more reference tooth shade values."

d. [Claim 1c] Wherein the method comprises deriving a certainty score expressing the certainty of the determined tooth shade value.

138. It is my opinion that Lehmann II discloses this limitation. Lehmann II relates to technology "for determining a patient's tooth shade comprising the steps of electronically imaging a patient's tooth to obtain an image which includes color information representative of tooth color." *See* Lehmann II at para. [0011]. According to Lehmann II, "[t]he identification of tooth shade(s) is generally made by comparing the determined tooth color to a plurality of electronically stored tooth shades." *See id.* at para. [0013].

139. The system in Lehmann II "associates one or more of the plurality of tooth shades with at least one standardized shade" by comparing "the chromaticities and RGB representations" of the tooth color and the reference teeth. *See id.*, at paras. [0044]-[0045]. Moreover, according to Lehmann II, "a comparison of the RGB values is made between the tooth image data 52 and the several shades to find a best fit or match." *See id.* at para. [0062].[5] It is my opinion that a POSITA would understand that finding the "best fit or match" necessarily involves determining

[5] Although Lehmann II discloses that this comparison is done in a system using the same camera, *see id.*, Lehmann II later discloses that such a comparison can be done by loading the tooth shade data directly into the system so long as the cameras are sufficiently calibrated. *See id.* at para. [0064]. Accordingly, the use of the same camera is not necessary to implement this feature from Lehmann II.

accuracy values based on (i) the texture data (e.g., color data) of the reference tooth shades and (ii) the texture data (e.g., the color data) of the point on the patient's tooth because the "best fit or match" will necessarily correspond to the most accurate standard tooth shade value.

140. Accordingly, it is my opinion that Lehmann II discloses "wherein the method comprises deriving a certainty score expressing the certainty of the determined tooth shade value."

e. A POSITA Would Be Motivated to Combine the Accuracy Features in Lehmann II with the System Disclosed in Korten

141. In my opinion, a POSITA would have an overwhelming motivation to include the "best fit or match" technology from Lehmann II in the shape and color measuring system described in Korten. Both references disclose substantially overlapping technology related to providing image, color, and tooth shade information for a patient's tooth. Although Lehmann II is directed towards the analysis of 2D images, whereas Korten is directed towards rendering and displaying 3D models, this difference is immaterial as it relates to ***determining the certainty score*** of the selected tooth shade value.

142. Indeed, both Korten and Lehmann II describe as objectives of each respective system the ability to provide accurate representations related to the colors

of the patient's teeth. *See, e.g.,* Korten at col. 2:13-16; Lehmann II at para. [0010]. Moreover, both references disclose matching the color data from a point on the patient's tooth to the color data from the standard tooth shades from a tooth shade guide. *See, e.g.,* Korten at col. 5:28-34; Lehmann II at para. [0062]. While Korten describes "matching," Lehmann II provides a method for determining "a best fit or match" by comparing the RGB values, thus providing a specific way for the matching process in Korten to be performed. *See* Lehmann II at para. [0062].

143. Because Korten and Lehmann II both use the same types of color and shade systems (*e.g.*, RGB for color and a VITA classic system for shade), a POSITA would expect that the "best fit or match" technique from Lehmann II could be successfully used in the system from Korten. Moreover, doing so would achieve the objectives of Korten of providing a "matching" tooth shade value.

144. Further, it is my opinion that the "best fit" technique from Lehmann II could be successfully incorporated into the system and methods disclosed in Korten. Both references have the same underlying color and tooth shade measurements obtained from both the patient's tooth and the tooth shade guides. Accordingly, it is my opinion that implementing the calculation from Lehmann II into the system disclosed in Korten would be a straightforward exercise for a POSITA.

145. Thus, because Korten and Lehmann II are in the same field, teach

analogous solutions to the same shade-matching issue, and have the same purpose of providing accurate representations of patient's teeth, it is my opinion that a POSITA would have been motivated to use the shade matching feature of Lehmann II in the systems and methods disclosed by Korten. Moreover, as discussed above, a POSITA would have a high expectation that such a combination would be successful.

2. Claim 2 Is Rendered Obvious

146. As explained below, it is my opinion that Korten in view of Lehmann II teaches, and therefore renders obvious, every element of claim 2.

a. [Claim 2] The method according to claim 1, wherein determining the tooth shade value for the point comprises selecting the reference tooth shade value with the known texture value closest to the texture data of the point.

147. It is my opinion that Lehmann II discloses this limitation. According to Lehmann II, "[t]he identification of tooth shade(s) is generally made by comparing the determined tooth color to a plurality of electronically stored tooth shades." *See* Lehman II at para. [0013]. In particular, the system in Lehmann II "associates one or more of the plurality of tooth shades with at least one standardized shade" by comparing "the chromaticities and RGB representations" of the tooth color and the reference teeth. *See id.*, at paras. [0044]-[0045]. Importantly, according to Lehmann II, "a comparison of the RGB values is made between the

tooth image data 52 and the several shades to find ***a best fit or match***." *See id.* at para. [0062] (emphasis added).

148. It is my opinion that a POSITA would understand that finding the "best fit or match" necessarily involves determining accuracy values based on (i) the texture data (e.g., color data) of the reference tooth shades and (ii) the texture data (e.g., the color data) of the point on the patient's tooth because the "best fit or match" will necessarily correspond to the most accurate standard tooth shade value. Moreover, it is my opinion that the "best fit or match" is going to be the reference tooth shade value with the known texture value closest to the texture data of the point. Accordingly, it is my opinion that Lehmann II discloses the further limitations of claim 2.

b. A POSITA Would Be Motivated to Combine the Accuracy Features in Lehmann II with the System Disclosed in Korten

149. As noted above, a POSITA would have an overwhelming motivation to combine the accuracy feature from Lehman II into the system and methods disclosed in Korten. *See supra* § X.B.1 (discussion for claim 1). This same motivation applies here.

3. Claim 4 is Rendered Obvious

150. As explained below, it is my opinion that Korten in view of Lehmann II teaches, and therefore renders obvious, every element of claim 4.

a. [Claim 4] The method according to claim 1 wherein the method comprises generating a visual representation of the certainty score and displaying this visual representation in a user interface.

151. It is my opinion that Lehmann II discloses this limitation. For example, Lehmann II discloses that "an image 70 of a patient's tooth is matched to the appropriate shade, as above, and then an image 72 of the matched shade is also displayed on the monitor 44'. The system 34' further generates and displays the tooth shade identifying match, e.g., 'A2,' on the screen 44'." *See* Lehmann II at para. [0068]. Because the shade "A2" is the "best fit" or the closest match to the tooth shade, the projection of "A2" onto the screen provides a visual representation of the certainty score, *i.e.*, the tooth shade corresponding to the highest certainty score is displayed on the screen.

152. The following illustration excerpted from Lehmann II shows the visual representation of the certainty score (the "A2" shade circled in red):

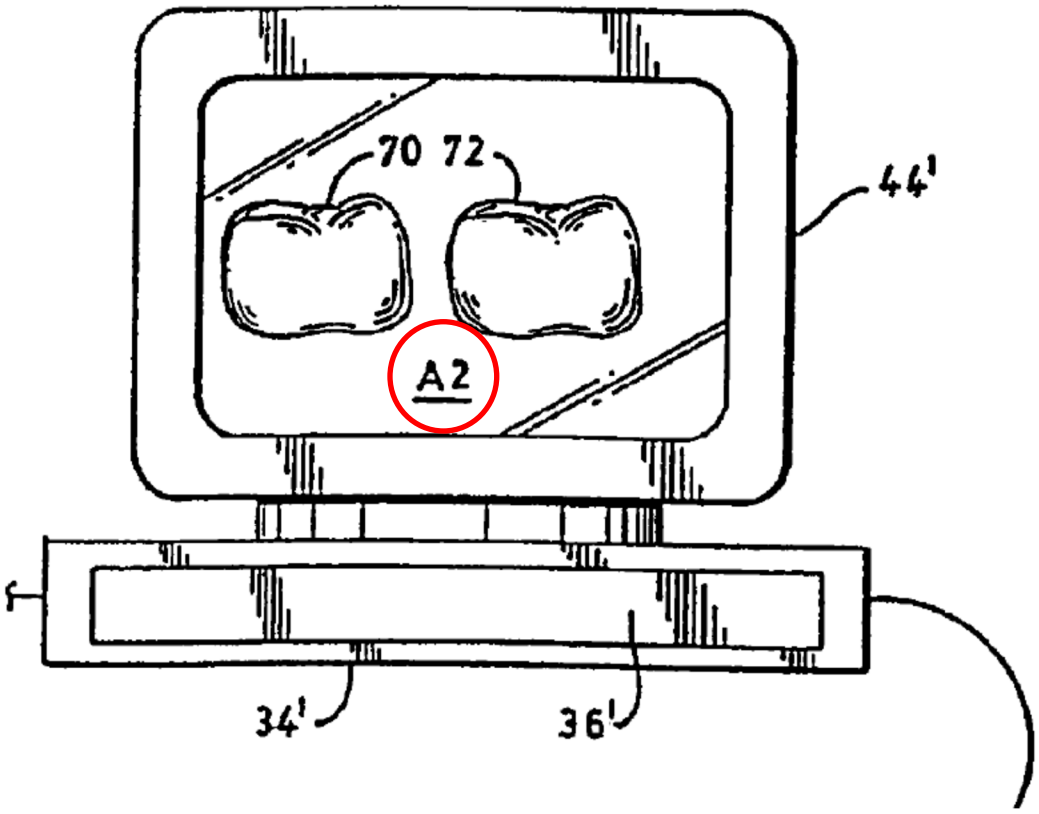

See id., Fig. 7 (red circle added).

153. My opinion is further supported by the arguments that Patent Owner is making in the co-pending litigation in which it argues that the display of a tooth shade along with a star meets this claim limitation. The following excerpt is taken from Patent Owner's final infringement contentions:

For example, the Smart Shade Guide feature identifies which of the three values represents the shade with the highest accuracy (the "closest matching shade") and marks that tooth shade value with a star. The star next to the most accurate tooth shade value is a visual representation of the certainty score, displayed in a user interface.

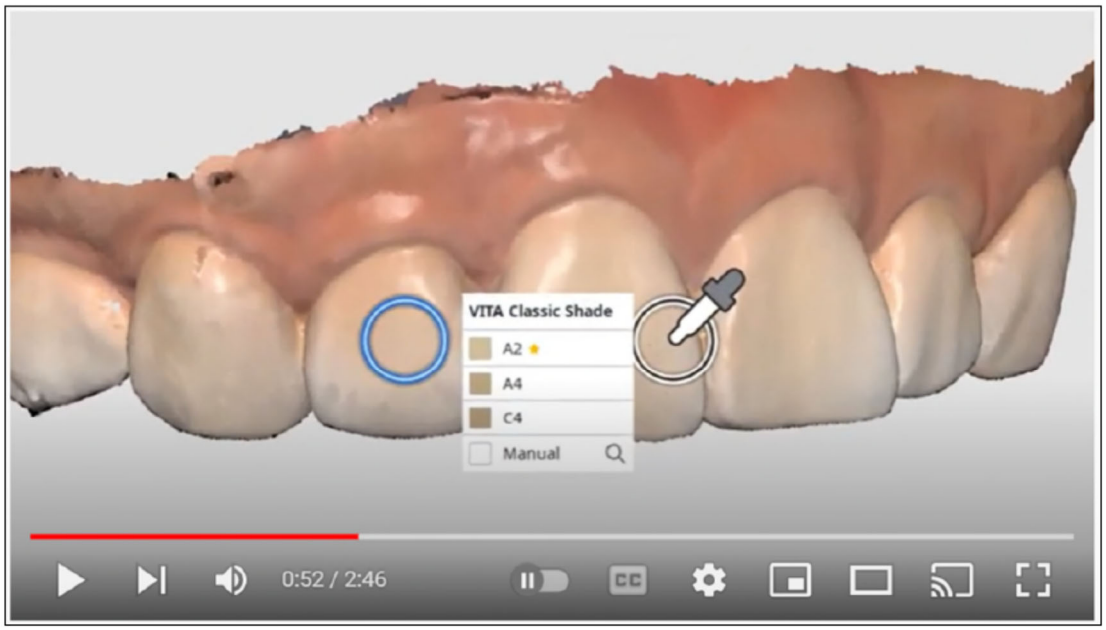

Ex-1005 at Appendix D, 43.

154. If the listing of a tooth shade with a star meets this claim limitation, then it is my opinion that the listing of the closest matching tooth shade also meets this claim limitation. Accordingly, it is my opinion that Lehmann II discloses "generating a visual representation of the certainty score and displaying this visual representation in a user interface."

b. A POSITA Would Be Motivated to Combine the Display Features in Lehmann II with the System Disclosed in Korten

155. In my opinion, a POSITA would have an overwhelming motivation to use the display features from Lehmann II in the shape and color measuring system

described in Korten. As I have discussed previously, the systems and technology in Lehmann II substantially overlap with the systems and technology from Korten. *See supra* § X.B.1 (discussion for Claim 1).

156. Lehmann II provides a number of advantages of generating a visual representation of the tooth shade having the best fit. For example, according to Lehmann II, "simultaneously displaying color information of the tooth and tooth shade information" allows "visual comparisons" to be made. *See* Lehmann II at para. [0022]. In addition, "generat[ing] and display[ing] the tooth shade identifying match, e.g., 'A2,' on the screen 44'" allows for "the ordering information about the tooth reconstruction [to be] easily ascertained." *See id.* at para. [0068].

157. Korten similarly discloses the use of a computer monitor to display the rendering of a 3D model of the patient's tooth, which is generated using both shape and color data. *See, e.g.,* Korten, Fig. 5; col. 10:19-36. Accordingly, the same advantages identified by Lehmann II in displaying the tooth shade of the best fit would also apply to the display disclosed in Korten. For this reason, it is my opinion that a POSITA would have a motivation to use this feature from Lehmann II in the system disclosed in Korten. Moreover, because this feature involves displaying additional information on a computer screen, it is my opinion that a POSITA would easily expect this combination to be successful.

4. Claim 5 Is Rendered Obvious

158. As explained below, it is my opinion that Korten in view of Lehmann II teaches, and therefore renders obvious, every element of claim 5.

a. [Claim 5] The method according to claim 4, wherein the visual representation of the certainty score is displayed together with or is mapped onto the digital 3D representation of the tooth.

159. It is my opinion that Lehmann II discloses this limitation. As noted above with respect to claim 4, the system 34' in Lehmann II generates and displays the tooth shade identifying match, e.g., 'A2,' on the screen 44'." *See* Lehmann II at para. [0068]. Further, as shown in Figure 7 the "A2" visual representation is displayed together with the 3D representation of the patient's tooth (image 70 in Figure 7).

b. A POSITA Would Be Motivated to Combine the Display Features in Lehmann II with the System Disclosed in Korten

160. In my opinion, a POSITA would be motivated to combine the display features in Lehmann II with the system disclosed in Korten for the same reasons discussed above with respect to Claim 4. *See supra* § X.B.3 (discussion for Claim 4).

5. Claim 9 Is Rendered Obvious

161. As explained below, it is my opinion that Korten in view of Lehmann II teaches, and therefore renders obvious, every element of claim 9.

162. Claim 9 recites: *The method according to claim 1, wherein the one or more reference tooth shade values relate to shade values for natural teeth with intact surface and/or to shade values for teeth prepared for a dental restoration.*

163. It is my opinion that Korten discloses the use of dental shade guides. In particular, Korten discloses that tooth shade values from well-known tooth shade systems can be used to express the tooth shade of the patient's tooth. *See* Korten at col. 5:30-34. As one example, Korten discloses "[s]uch a standard color scheme may for example correspond to the widely used VITAPAN™ Classical tooth color scheme which typically provides the different tooth colors: A1, A2, A3, A3.5, A4, B1, B2, B3, B4, C1, C2, C3, C4, D2, D3 and D4." *See id.*

164. Lehmann II discloses that the VITAPAN Classical color scheme is used to express the color for a prepared restoration. For example, as disclosed in Lehmann II, the Vita shade guide provides dental professionals with "standardized shade guides created by those companies which manufacture the reconstructive material." *See* Lehmann II at para. [0005].

165. Accordingly, it is my opinion that Korten in view of Lehmann II discloses this limitation. To the extent necessary, it is my opinion that a POSITA would understand that the tooth shade guides described in Korten relate to shade values for teeth prepared for a dental restoration, as confirmed by the disclosures in Lehmann II.

6. Claim 12 Is Rendered Obvious

166. As explained below, it is my opinion that Korten in view of Lehmann II teaches, and therefore renders obvious, every element of claim 12.

167. Claim 12 recites: *The method according to claim 1, wherein the method comprises creating a shade profile for the tooth from shade values determined one or more points on the tooth.*

168. As noted below, with respect to claim 13, Korten discloses this limitation. *See infra*, § X.B.7.d (discussion for element [Claim 13c]).

7. Claim 13 Is Rendered Obvious

169. As explained below, it is my opinion that Korten in view of Lehmann II teaches, and therefore renders obvious, every element of claim 13.

a. [13Pre] A method for determining shade of a patient's tooth, wherein the method comprises:

170. As noted above, Korten discloses this limitation to the extent it is limiting. *See supra* § X.A.1.a (Ground 1, discussion for element [Claim 1Pre]).

b. [Claim 13a] Obtaining a digital 3D representation of the tooth, where the digital 3D representation comprises shape data and texture data for the tooth;

171. As noted above, Korten discloses this limitation. *See supra* § X.A.1.b (Ground 1, discussion for element [Claim 1a]).

c. [Claim 13b] Determining a tooth shade value for at least one point on the tooth based on the texture data of the corresponding point of the digital 3D representation and on known texture values of one or more reference tooth shade values,

172. As noted above, Korten in view of Lehmann II discloses this limitation. *See supra* § X.B.1.c (discussion for element [Claim 1b]).

d. [Claim 13c] Wherein the method comprises creating a shade profile for the tooth from shade values determined one or more points on the tooth,

173. It is my opinion Korten discloses this limitation. As noted previously, Korten discloses determining shade values for at least one point on a patient's tooth. *See supra* § X.A.1.c (Ground 1, discussion for element [Claim 1b]).

174. Korten further discloses "measuring a second color at a second location on the same tooth . . ." *See* Korten at col. 5:9-11. These additional, measured colors "may be mapped relative to the first virtual dentition model at coordinates which correspond to the location at the dentition." *See id.* at col. 5:24-27. The determination of different colors for different portions of a tooth may be used when

building up the dental restoration such that the dental restoration may be comprised of different color shades. *See id.* at col. 10:65-11:7.

175. Korten further discloses determining standard tooth shade values for points on the patient's tooth that correspond to points in the 3D representation, by matching the texture data (e.g., the color data) obtained from the patient's tooth and the texture data (e.g., color data) associated with the various reference tooth shades. *See id.* at col. 5:30-34.

176. It is my understanding that Patent Owner has asserted that the term "tooth shade profile" take on its plain and ordinary meaning. *See* Ex-1003, at 3. It is my opinion that the disclosures in Korten, which teaches that tooth shade information be obtained at multiple points along the tooth, satisfies this plain and ordinary meaning. Accordingly, it is my opinion that Korten discloses "wherein the method comprises creating a shade profile for the tooth from shade values determined one or more points on the tooth."

e. [Claim 13d] Wherein the tooth shade profile comprises a one or more tooth shade regions on the tooth surface where an average tooth shade is derived for each region from tooth shade values determined for a number of points within the region.

177. It is my opinion that Korten in view of Lehmann II discloses this limitation. As noted above, Korten discloses that tooth shade values be determined

at multiple points of the tooth. According to Korten, the determination of different colors for different portions of a tooth may be used when building up the dental restoration such that the dental restoration may be comprised of different color shades. *See id.* at col. 10:65-11:7.

178. Lehmann II further discloses that the tooth shade values may be averaged across multiple points of the tooth within a region of the tooth. According to Lehmann II, "the image of the tooth 60 can be averaged over a selected area by selecting a particular region for which color imagery is averaged." *See* Lehmann II at para. [0067]. "For example, if the tooth 60 is to be averaged over the two pixel identified by the outline 68, then the subsystem 29 averages the two RGB values and specifies the tooth shade match in block 42b as an average of the two." *See id.*

179. Although the above disclosure in Lehmann II involves averaging using color data values, it is my opinion that it would be well within the skills of a POSITA to use tooth shade values as well. Indeed, Lehmann II elsewhere discloses "integrating at least a portion of the tooth to determine an average color over that portion of the tooth by combining color fractions of tooth shades." *See id.* at para. [0016]. Lehmann II further describes a process by which standardized tooth shades from various points within a region of the patient's tooth can be combined:

> The color correlation section of the invention can also identify a combination of tooth shades having a combined

> color corresponding to the color of the patient's tooth. As such, the system can (i) ***associate each of the tooth shades in the combination with at least one standardized shade*** corresponding to a particular manufacturer's porcelain product, (ii) ***specify fractions of each of the standardized shades*** needed to form the combined color, and (iii) communicate information identifying the fractions of each of the tooth shades in the combination to a user of the system.

See id. at para. [0046].

180. Accordingly, it is my opinion that Korten in view of Lehmann II discloses "wherein the tooth shade profile comprises a one or more tooth shade regions on the tooth surface where an average tooth shade is derived for each region from tooth shade values determined for a number of points within the region."

f. A POSITA Would Be Motivated to Combine the Tooth-Shade-Determining and Averaging Features for Regions of a Patient's Tooth Disclosed in Lehmann II with the System Disclosed in Korten

181. It is my opinion that a POSITA would have an overwhelming motivation to use the tooth-shade-determining feature for tooth regions described in Lehmann II in the shape and color measuring system described in Korten. As noted above, both references disclose substantially overlapping technology related to providing image, color, and tooth shade information for a patient's tooth. Moreover, both Korten and Lehmann II describe as objectives of each respective system the ability to provide accurate representations related to the colors of the patient's teeth.

See, e.g., Korten at col. 2:13-16; Lehmann II at para. [0010]. And both references disclose matching the color data from a point on the patient's tooth to the color data from the standard tooth shades from a tooth shade guide to associate a tooth shade with a point on the patient's tooth. *See, e.g.,* Korten at col. 5:28-34; Lehmann II at para. [0062]. In addition, both Korten and Lehmann II use the same types of color and shade systems (*e.g.*, RGB for color and a VITA classic system for shade). Because of this significant amount of overlap, it is my opinion that a POSITA would expect that this feature from Lehmann II could be successfully used in the system described in Korten.

182. In addition, it is my opinion that a POSITA would have an overwhelming motivation to combine the tooth-shade-determining and averaging features from Lehmann II that averages the tooth shades across a region of the patient's tooth into the system disclosed in Korten. In particular, Lehmann II discloses that "unlike the tooth shades from the shade guides, which are very uniform in color, a patient's tooth can include a myriad of different shades." *See* Lehmann II at para. [0065]. For example, "[t]ooth stains and the like alter the tooth's color spatially, ***so that a selection or integration of color is preferred.***" *See id.* Lehmann II describes that one way to address this issue, as described in Figure 6, is to average the color values across a selected area of the tooth. *See id.* at para. [0067]. The same

lack of color uniformity would also arise in the patient's dentition being captured by the 3D generating system in Korten. Accordingly, a POSITA would be motivated to address the lack of uniformity by incorporating the averaging technique disclosed in Lehmann II.

183. As noted in the previous section, Lehmann II also discloses "integrating at least a portion of the tooth to determine an average color over that portion of the tooth by combining color fractions of tooth shades." *See id.* at para. [0016]. Lehmann II describes a process by which this integration of tooth shades can occur:

> The color correlation section of the invention can also identify a combination of tooth shades having a combined color corresponding to the color of the patient's tooth. As such, the system can (i) ***associate each of the tooth shades in the combination with at least one standardized shade*** corresponding to a particular manufacturer's porcelain product, (ii) ***specify fractions of each of the standardized shades*** needed to form the combined color, and (iii) communicate information identifying the fractions of each of the tooth shades in the combination to a user of the system.

See id. at para. [0046].

184. Further, it is my opinion that the tooth-shade-determining technique from Lehmann II could be successfully incorporated into the system and methods disclosed in Korten. Both references disclose that tooth shade values can be determined for specific points on the tooth. Accordingly, it is my opinion that a

POSITA could easily implement the tooth-shade-determining technique from Lehmann II into Korten because doing so involves a calculation using values that the system in Korten has already obtained. Accordingly, it is my opinion that implementing this technique from Lehmann II into the system of Korten would be a straightforward exercise for a POSITA.

185. Thus, because Korten and Lehmann II are in the same field, teach analogous solutions to the same shade-matching issue, and have the same purpose of providing accurate representations of patient's teeth, it is my opinion that a POSITA would be motivated to use the fractional-tooth-shade-determining feature for tooth regions described in Lehmann II in the systems and methods disclosed by Korten. Moreover, as discussed above, a POSITA would have a high expectation that such a combination would be successful.

8. Claim 14 Is Rendered Obvious

186. As explained below, it is my opinion that Korten in view of Lehmann II teaches, and therefore renders obvious, every element of claim 14.

a. [14Pre] A method for determining shade of a patient's tooth, wherein the method comprises:

187. As noted above, Korten discloses this limitation to the extent it is limiting. *See supra* § X.A.1.a (Ground 1, discussion for element [Claim 1Pre]).

b. [Claim 14a] Obtaining a digital 3D representation of the tooth, where the digital 3D representation comprises shape data and texture data for the tooth;

188. As noted above, Korten discloses this limitation. *See supra* § X.A.1.b (Ground 1, discussion for element [Claim 1a]).

c. [Claim 14b] Determining a tooth shade value for at least one point on the tooth based on the texture data of the corresponding point of the digital 3D representation and on known texture values of one or more reference tooth shade values,

189. As noted above, Korten in view of Lehmann II discloses this limitation. *See supra* § X.B.1.c (discussion for element [Claim 1b]).

d. [Claim 14c] wherein obtaining the digital 3D representation of the tooth comprises recording a series of sub-scans of the tooth, where at least one of said sub-scans comprises both texture information and geometry information for said tooth, and generating the digital 3D representation of the tooth from the recorded series of sub-scans.

190. It is my opinion that Korten discloses this limitation. For example, Korten discloses "measuring a second color at a second location on the same tooth or a further tooth in the patient's dentition, the second location being different from the first location." *See* Korten at col. 5:9-11. As part of this process, the first optical sensor may capture "the shape of that further tooth and based thereon updating the first virtual dentition model by the shape of the further tooth." *See id.* at col. 5:14-16. Further, "[t]he measured colors may be mapped relative to the first virtual

dentition model at coordinates which correspond to the location at the dentition." *See id.* at col. 5:24-27.

191. The capture of the first location corresponds to the first subscan in this claim limitation, and the capture of shape and color data associated with the second location correspond to the second subscan. By incorporating the shape and color data from the second subscan into the location coordinates determined for the first scan, the disclosed system in Korten generates the 3D representation using this series of subscans.

e. A POSITA Would Be Motivated to Combine the Accuracy Features in Lehmann II with the System Disclosed in Korten

192. The motivation to combine the accuracy feature in Lehmann II with the system disclosed in Korten overlaps with the motivation to combine described with respect to claim 1. *See supra* § X.B.1 (discussion for Claim 1).

9. Claim 15 Is Rendered Obvious

193. As explained below, it is my opinion that Korten discloses the additional limitations of claim 15 such that Korten in view of Lehmann II renders obvious every element of claim 15.

194. Claim 15 recites: *The method according to claim 14, wherein the texture data at least partly are derived by combining the texture information from corresponding parts of a number of the sub-scans.*

195. It is my opinion that Korten discloses this limitation. For example, Korten discloses "measuring a second color at a second location on the same tooth or a further tooth in the patient's dentition, the second location being different from the first location." *See* Korten at col. 5:9-11. As part of this process, the first optical sensor may capture "the shape of that further tooth and based thereon updating the first virtual dentition model by the shape of the further tooth." *See id.* at col. 5:14-16. Korten further discloses that "colors may be measured on the same tooth or further teeth and the first virtual dentition model may be further updated by the shape of any further teeth. Thus, the entire dentition or the entire upper or lower jaw may be captured in shape and ***a plurality of colors*** may be measured thereon. The measured colors may be mapped relative to the first virtual dentition model at coordinates which correspond to the location at the dentition." *See id.* at col. 5:17-27.

196. Accordingly, because the second (and further) colors are mapped into the first virtual dentition, it is my opinion that Korten discloses "wherein the texture data at least partly are derived by combining the texture information from corresponding parts of a number of the sub-scans."

10. Claim 16 Is Rendered Obvious

197. As explained below, it is my opinion that Korten in view of Lehmann II teaches, and therefore renders obvious, every element of claim 16.

a. [Claim 16] The method according to claim 15, wherein combining the texture information from the sub-scans comprises interpolating the texture information and/or calculating an average value of the texture information.

198. As noted above, Lehmann II discloses averaging the color values across the points included within a region of the tooth. *See supra* § X.B.7.e (discussion for element [Claim 13d]). Accordingly, using the averaging technique from Lehmann II in the system described in Korten in which multiple subscans are used to render a 3D image will result in the color information in Korten being averaged. It is therefore my opinion that this limitation is met.

b. A POSITA Would Be Motivated to Combine the Tooth-Color-Averaging Feature for Regions of a Patient's Tooth Disclosed in Lehmann II with the System Disclosed in Korten

199. In my opinion, a POSITA would be motivated to combine the tooth-color-averaging features in Lehmann II with the system disclosed in Korten for the same reasons discussed above with respect to Claim 13. *See supra* § X.B.7 (discussion for Claim 13).

C. Ground 3: Claims 10, 16, and 17 Are Rendered Obvious by Korten in View of Lehmann II and in further view of Babayoff

200. In my opinion, claims 10, 16, and 17 are rendered obvious by the disclosures in Korten in view of the disclosures in Lehmann II and in further view of the disclosures in Babayoff. In this section, I provide my analysis for each claim, showing how each element of the claims is disclosed in one or more of these references. At the end of each claim, where appropriate, I provide my opinion that a POSITA would have more than sufficient motivation to combine the relevant disclosures from Babayoff into the combined system of Korten and Lehmann II.

1. Claim 10 Is Rendered Obvious

201. As explained below, it is my opinion that Korten in view of Lehmann II and in further view of Babayoff teaches, and therefore renders obvious, every element of claim 10.

a. [Claim 10] The method according to claim 1, wherein the method comprises comparing the texture data with known texture values for soft oral tissue, such as gum tissue and gingiva.

202. In my opinion, Babayoff discloses this limitation. For example, Babayoff discloses a method for differentiating between a first tissue and a second tissue where "said first tissue comprises substantially different color characteristics from those of said second tissue." *See* Babayoff at col. 4:26-28. Babayoff further

describes that the "first tissue comprises hard tissues such as teeth, and the soft tissue comprises at least one of gums, tongue, cheeks and lips." *See id.* at col. 4:37-39.

203. Because Babayoff distinguishes between hard and soft tissue, and associates the hard tissue with the first tissue, it is my opinion that a POSITA would understand that the soft tissue corresponds to the second tissue. Finally, Babayoff discloses that the color data of the second tissue "is correlated with a color representative of said second tissue." *See id.* at 4:35-36.

204. Elsewhere, Babayoff discloses that "the color parameter c is analysed [*sic*] for each data point in I, and compared with at least one color criterion, and typically with at least two color ranges R_1, R_2" where the ranges "each represent the values of the color parameter expected for one or another of the two tissues, such as for the teeth and gums." *See id.* at col. 21:23-28. As an example, "the color range R_1 for the teeth will include values for c typically associated with the hard tissues including the teeth," and "the color range R_2 for the soft tissues will include values for c typically associated with gums, cheeks, lips, and the tongue." *See id.* at col. 21:28-38.

205. It is my opinion that Babayoff discloses "wherein the method comprises comparing the texture data with known texture values for soft oral tissue, such as gum tissue and gingiva." Further, as explained above, the combination of Korten

with Lehmann II discloses each of the limitations and elements of claim 1. Accordingly, it is my opinion that the combination of Korten and Lehmann II, along with Babayoff renders claim 10 obvious.

b. A POSITA Would Be Motivated to Combine the Gingiva Identification Feature in Babayoff with the Combined System of Korten and Lehmann II

206. In my opinion, a POSITA would be motivated to combine the gingiva identification feature from Babayoff into the combined system of Korten and Lehmann II. For example, Babayoff teaches that implementing the gingiva identification scheme would allow a user to display only the surface of interest, *ie.*, the patient's teeth. *See id.* at col. 22:47-56. Doing so allows the user to manipulate the representation of the patient's teeth as desired, such as by isolating individual teeth on the display. *See id.* at col. 22:50. Moreover, the technique in Babayoff allows for the stitching together of various sub-scans captured of the patient's teeth to be accomplished more effectively. *See id.* at col. 2:1-23.

207. As with Korten and Lehmann II, the underlying technology described in Babayoff substantially overlaps with that described in the other two references. For example, Babayoff discloses capturing color data as RGB values, similarly to Korten and Lehmann II. Further, Korten, Lehmann II, and Babayoff all further disclose obtaining color data for points on the patient's teeth.

208. Because the three references all use the same type of color systems, it is my opinion that a POSITA would expect the gingiva identification technique from Babayoff could be successfully used in the combined system of Korten and Lehmann II.

209. Further, it is my opinion that the gingiva identification technique from Babayoff could be successfully used in the combined system of Korten and Lehmann II. The combined Korten/Lehmann II system captures the same type of color data that is used by Babayoff to identify the two different types of tissue. Accordingly, incorporating this feature into the Korten/Lehmann II system would involve nothing more than implementing the additional programming as described in the Babayoff reference. In my opinion, doing so would be a straightforward exercise for a POSITA.

210. Thus, because Korten, Lehmann II, and Babayoff are in the same field, teach analogous solutions to the same shade-matching issue, and have the same purpose of providing representations of patient's teeth, it is my opinion that a POSITA would have been motivated to combine the shade matching feature of Lehmann II with the combined systems and methods of Korten and Lehmann II. Moreover, as discussed above, a POSITA would have a high expectation that such a combination would be successful.

2. Claim 16 Is Rendered Obvious

211. As explained below, it is my opinion that Korten in view of Lehmann II and in further view of Babayoff teaches, and therefore renders obvious, every element of claim 16.

a. [Claim 16] The method according to claim 15, wherein combining the texture information from the sub-scans comprises interpolating the texture information and/or calculating an average value of the texture information.

212. In my opinion, Babayoff discloses this limitation. For example, Babayoff discloses that "a plurality of separate numerical sub-entities associated with a corresponding plurality of teeth within said intra-oral cavity are provided," and are "combined to a single transformed sub-entity, wherein color data corresponding to said plurality of numerical sub-entities are combined to a single transformed sub-entity." *See* Babayoff at col. 5:57-62. According to Babayoff, the "color data corresponding to said plurality of numerical sub-entities in (a) are combined in a predetermined manner," including by "averaging the color value at each corresponding data point of said plurality of numerical sub-entities." *See id.* at col. 5:62-66.

213. It is my opinion that Babayoff discloses "wherein combining the texture information from the sub-scans comprises interpolating the texture information and/or calculating an average value of the texture information." Further, as

explained above, the combination of Korten with Lehmann II discloses each of the limitations and elements of claim 15, from which claim 16 depends. *See supra*, § X.B.9 (discussion for Claim 15). Accordingly, it is my opinion that the combination of Korten and Lehmann II, along with Babayoff renders claim 16 obvious.

b. A POSITA Would Be Motivated to Combine the Color Averaging Feature in Babayoff with the Combined System of Korten and Lehmann II

214. In my opinion, a POSITA would be motivated to combine the color averaging feature from Babayoff into the combined system of Korten and Lehmann II. As noted above, all three references disclose substantially overlapping technology related to providing image and color information for a patient's tooth. Moreover, all three references describe as objectives of each respective system the ability to provide accurate representations related to the colors of the patient's teeth. *See* Babayoff at col. 8:15-18.

215. As with Korten and Lehmann II, the underlying technology described in Babayoff substantially overlaps with that described in the other two references. For example, Babayoff discloses capturing color data as RGB values, similarly to Korten and Lehmann II. Further, Korten, Lehmann II, and Babayoff all disclose obtaining color data for points on the patient's teeth.

216. Because the three references all use the same type of color systems, it is my opinion that a POSITA would expect the color averaging technique from Babayoff could be successfully used in the combined system of Korten and Lehmann II.

217. Further, it is my opinion that the color averaging technique from Babayoff could be successfully used in the combined system of Korten and Lehmann II. The combined Korten/Lehmann II system captures the same type of color data that is used by Babayoff to average the various color values in the sub-entities. Accordingly, incorporating this feature into the Korten/Lehmann II system would involve nothing more than implementing the additional programming as described in the Babayoff reference. In my opinion, doing so would be a straightforward exercise for a POSITA.

218. Thus, because Korten, Lehmann II, and Babayoff are in the same field, teach analogous solutions to the same shade-matching issue, and have the same purpose of providing accurate representations of patient's teeth, it is my opinion that a POSITA would have been motivated to combine the color averaging feature of Lehmann II with the systems and methods disclosed by Korten. Moreover, as discussed above, a POSITA would have a high expectation that such a combination would be successful.

3. Claim 17 Is Rendered Obvious

219. As explained below, it is my opinion that Korten in view of Lehmann II and in further view of Babayoff teaches, and therefore renders obvious, every element of claim 17.

a. [Claim 17] The method according to claim 16, wherein the calculated average value is a weighted average of the texture information.

220. In my opinion, Babayoff discloses this limitation. For example, as discussed in connection with the analysis for claim 16, Babayoff discloses that "a plurality of separate numerical sub-entities associated with a corresponding plurality of teeth within said intra-oral cavity are provided," and are "combined to a single transformed sub-entity, wherein color data corresponding to said plurality of numerical sub-entities are combined to a single transformed sub-entity." *See* Babayoff at col. 5:57-62. According to Babayoff, the "color data corresponding to said plurality of numerical sub-entities in (a) are combined in a predetermined manner," including by "weight averaging the color value at each corresponding data point of said plurality of numerical sub-entities." *See id.* at cols. 5:66-6:2.

221. It is my opinion that Babayoff discloses "wherein the calculated average value is a weighted average of the texture information." Further, as explained above, the combination of Korten with Lehmann II along with Babayoff discloses each of the limitations and elements of claim 16, from which claim 17

depends. Accordingly, it is my opinion that the combination of Korten and Lehmann II, along with Babayoff also renders claim 17 obvious.

b. A POSITA Would Be Motivated to Combine the Weighted Averaging Feature for Color in Babayoff with the Combined System of Korten and Lehmann II

222. As noted above, a POSITA would have an overwhelming motivation to combine the color averaging feature from Lehman II into the system and methods disclosed in Korten. *See supra* X.C.2 (discussion for claim 16). This same motivation applies here for weighted averaging because the weighted color averaging technique is one way for implementing the color averaging feature.

D. Ground 4: Claims 1, 2, 9, 12, and 14 - 16 Are Rendered Obvious by Korten in View of Lehmann I

223. In my opinion, claims 1, 2, 9, 12, and 14-16 are rendered obvious by the disclosures in Korten in view of the further disclosures in Lehmann I. In this section, I provide my analysis for each claim, showing how each element of the claims is disclosed in one or both of these references. At the end of each claim, where appropriate, I provide my opinion that a POSITA would have more than sufficient motivation to combine the relevant disclosures from Lehmann I into the system described by Korten.

1. Claim 1 Is Rendered Obvious

224. As explained below, it is my opinion that Korten in view of Lehmann I teaches, and therefore renders obvious, every element of claim 1.

a. [1Pre] A method for determining shade of a patient's tooth, wherein the method comprises:

225. As noted above, it is my opinion that Korten teaches this limitation. *See supra* § X.A.1.a (Ground 1, discussion for element [Claim 1Pre]).

b. [Claim 1a] Obtaining a digital 3D representation of the tooth, where the digital 3D representation comprises shape data and texture data for the tooth;

226. As noted above, it is my opinion that Korten discloses this limitation. *See supra* § X.A.1.b (Ground 1, discussion for element [Claim 1a]).

c. [Claim 1b] Determining a tooth shade value for at least one point on the tooth based on the texture data of the corresponding point of the digital 3D representation and on known texture values of one or more reference tooth shade values,

227. It is my opinion that Korten in view of Lehmann I discloses this limitation. Lehmann I discloses technology "for tooth shade determination using digital signal processing" in which color images of one or more teeth are analyzed and compared to known tooth shades for use in certain clinical or cosmetic procedures. *See* Lehmann I, col. 1:16-21. According to Lehmann I, a group of pixels covering a specific area of a tooth is identified, called a pseudo-pixel, and the

intensity and color associated with the pseudo-pixel are computed by forming an average of the actual pixels. *See id.* at cols. 5:50-6:18. When this process is performed on a reference tooth, it results in a Reference Image, *see id.* at col. 7:3-6, and when it is performed on a patient's tooth, it results in a Real Image, *see id.* at 7:39-53.

228. The "Real Image is compared (i.e., correlated) to each Reference Image in the database" using a correlation algorithm. *See id.* at col. 9:30-35. This correlation results in a composite match number ("CMN") that "indicat[es] how well the Real Image matches to that Reference Image. The composite match numbers are compared to one another and one of the Reference Images is selected as the 'best fit' match to the Real Image." *See id.* at col. 9:37-42.

d. [Claim 1c] Wherein the method comprises deriving a certainty score expressing the certainty of the determined tooth shade value.

229. It is my opinion that Korten in view of Lehmann I discloses this limitation. As noted in the previous section, Korten discloses that the color data from the location on the patient's tooth may be compared to the standard color data from a standard color data scheme to find a matching standard color. *See also* Korten at col. 5:28-30 (describing "matching at least the first color with a standard color"). Korten further describes that it is desirable to provide "precise color measuring," *see*

id. at col. 8:41-44, and that the technology it describes is directed towards providing "for relatively precise color measuring" and "minimizing errors in color measurement." *See id.* at col. 2:13-23; *see also id.* at col. 6:59-63 (noting that the method may include "determining the validity of the measured first color" depending on certain accuracy measurements); col. 10:43-46 (noting that because of "the independent capturing of the shape and the measuring of the colors, both the shape information and the color information are relatively accurate"). Thus, in my opinion, a POSITA would understand the disclosure in Korten regarding "matching at least the first color with a standard color" to be referring to finding a standard color from a reference tooth shade guide that most closely matches the first color. To make this determination, the system in Korten would need to compare the color data of the first color with each of the standard colors in a tooth shade guide to find the closest match. In fact, Korten discloses such a comparison. Korten, for example, discloses "comparing the measured first color with a reference color, and—depending on the degree of similarity or the match between the measured first color and the reference color—determining the validity of the measured first color." *See id.* at cols. 4:60-5:6.

230. It is my understanding that Patent Owner has argued that the term "deriving a certainty score" means "determining an accuracy value based on the

tooth shade value, the texture data, and/or texture information." *See* Ex-1003 at 3. The term "accuracy" refers to how close a value is with a reference value. *See* Ex-1007.at 2(b) In my opinion, a POSITA would understand that the technology in Korten calculates a "certainty score" under this construction because it measures how accurately the standard color data for each standard tooth shade value matches the color data from the patient's tooth. The standard tooth shade value associated with the most accurate standard color data is chosen as the "matching" shade value. As part of this process, accuracy values must be calculated.

231. As noted above, Lehmann I discloses the use of a correlation algorithm that results in a composite match number. *See supra* § X.D.1.c. Lehmann I further discloses the "best fit" for a reference image. In my opinion, the determination of the "best fit" amongst the Reference Images discussed above for Lehmann I necessarily requires the use of certainty scores because the "best fit" would correspond to the reference tooth shade that has the highest certainty score.

232. Accordingly, it is my opinion that Korten in view of Lehmann I discloses "wherein the method comprises deriving a certainty score expressing the certainty of the determined tooth shade value" because Korten discloses that tooth shade values are determined for each point on the 3D image of the tooth, and

Lehmann I discloses a process for determining the "best fit" from the various reference tooth shades.

e. A POSITA Would Be Motivated to Combine the Accuracy Features in Lehmann I with the System Disclosed in Korten

233. In my opinion, a POSITA would have an overwhelming motivation to include the "best fit" technology from Lehmann I in the shape and color measuring system described in Korten. Both references disclose substantially overlapping technology related to providing image, color, and tooth shade information for a patient's tooth. Although Lehmann I is directed towards the analysis of 2D images, whereas Korten is directed towards rendering and displaying 3D models, this difference is immaterial as it relates to ***determining the certainty score*** of the selected tooth shade value. It is just as important to identify the closest matching reference tooth shade value in a 2D image as it is in a 3D image, as discussed in both Korten and Lehmann I. Indeed, both Korten and Lehmann I describe as objectives of each respective system the ability to provide accurate representations related to the colors of the patient's teeth. *See, e.g.,* Korten at col. 2:13-16; Lehmann I at col. 1:50-59.

234. The fact that Lehmann I discloses finding the "best fit" for a reference tooth shade based on pseudo pixels does not impact whether the "best fit" concept

from Lehmann I can be used in the system and methods disclosed in Korten. According to Lehmann I, the "best fit" is determined by comparing a number of color values from the Real Image (*e.g.*, a color value associated with each pseudo pixel) with corresponding color values associated with each Reference Image. Lehmann I further discloses that the following equation can be used to make this "best fit" determination:

$$CMN_x = \sum_{q=1}^{n} \sqrt{\left(\frac{R_{x,q} - R_{i,q}}{Pcount_x}\right)^2 + \left(\frac{G_{x,q} - G_{i,q}}{Pcount_x}\right)^2 + \left(\frac{B_{x,q} - B_{i,q}}{Pcount_x}\right)^2}$$

See Lehmann I at col. 11:40. The term q corresponds to each set of matching pixels in the Real Image and the Reference Image.

235. By setting n and $Pcount_x$ both equal to 1, this same equation can be used to find the closest match for a reference tooth shade when only a single color value has been measured. In this situation, the CMN becomes the Euclidean distance between two colors in the RGB space, a well-known measure of distance that a POISTA would have known at the time the 151 patent was filed. Such a situation would be analogous to the situation in which the closest match is being determined for a point based upon the color values for that point. Accordingly, implementing the "best fit" concept from Lehmann I in the system and methods disclosed in Korten involves nothing more than setting a value in an existing summation disclosed in

Lehmann I equal to 1. In fact, the equation itself does not even need to be changed. Put another way, a POSITA would certainly recognize and appreciate that the "best fit" concept from Lehmann I involving a collection of points can be used in Korten to find the "best fit" when the "collection of points" consists of a single point. Moreover, doing so would achieve the objectives of Korten of providing a "matching" tooth shade value. In addition, Lehmann I discloses that a "statistical measure" other than average may be used to compute the color associated with a pseudo-pixel. *See id.* at col. 6:15-18. Therefore, a POSITA would understand that other statistical measures, such as rank order statistics could be used, some of which, *e.g.*, min or max, or a kth order statistic, would be equivalent to using the color of a single pixel from among the pixels forming the pseudo-pixel, in order to determine the "best fit."

236. Further, it is my opinion that the "best fit" technique from Lehmann I could be successfully incorporated into the system and methods disclosed in Korten. Both references have the same underlying color and tooth shade measurements obtained from both the patient's tooth and the tooth shade guides. Accordingly, it is my opinion that implementing the calculation from Lehmann I into the system disclosed in Korten would be a straightforward exercise for a POSITA involving the summation algorithm in Lehmann I, as discussed above.

237. Thus, because Korten and Lehmann I are in the same field, teach

analogous solutions to the same shade-matching issue, and have the same purpose of providing accurate representations of patient's teeth, it is my opinion that a POSITA would have been motivated to use the shade matching feature of Lehmann I in the systems and methods disclosed by Korten. Moreover, as discussed above, a POSITA would have a high expectation that such a combination would be successful.

2. Claim 2 Is Rendered Obvious

238. As explained below, it is my opinion that Korten in view of Lehmann I teaches, and therefore renders obvious, every element of claim 2.

a. [Claim 2] The method according to claim 1, wherein determining the tooth shade value for the point comprises selecting the reference tooth shade value with the known texture value closest to the texture data of the point.

239. It is my opinion that Lehmann I discloses this limitation. According to Lehmann I, the "Real Image is compared (i.e., correlated) to each Reference Image in the database" using a correlation algorithm. *See* Lehmann I at col. 9:30-35. This correlation results in a composite match number ("CMN") that "indicat[es] how well the Real Image matches to that Reference Image. The composite match numbers are compared to one another and one of the Reference Images is selected as the 'best fit' match to the Real Image." *See id.* at col. 9:37-42. Moreover, as noted above, it would be well within the skills of a POSITA to use the "best fit" algorithms disclosed in Lehmann I in the system and methods disclosed in Korten.

240. It is my opinion that a POSITA would understand that finding the "best fit" necessarily involves determining accuracy values based on (i) the texture data (e.g., color data) of the reference tooth shades and (ii) the texture data (e.g., the color data) of the point on the patient's tooth. Lehmann I makes this comparison explicit. *See id.* at col. 11:40. Moreover, it is my opinion that the "best fit" is going to be the reference tooth shade value with the known texture value closest to the texture data of the point. Accordingly, it is my opinion that Korten in view of Lehmann I discloses the further limitations of claim 2.

b. A POSITA Would Be Motivated to Combine the Accuracy Features in Lehmann I with the System Disclosed in Korten

241. As noted above, a POSITA would have an overwhelming motivation to combine the accuracy feature from Lehman I into the system and methods disclosed in Korten. *See supra* X.D.1 (discussion for claim 1). This same motivation applies here.

3. Claim 9 Is Rendered Obvious

242. As explained below, it is my opinion that Korten in view of Lehmann I teaches, and therefore renders obvious, every element of claim 9.

243. Claim 9 recites: *The method according to claim 1, wherein the one or more reference tooth shade values relate to shade values for natural teeth with intact surface and/or to shade values for teeth prepared for a dental restoration.*

244. It is my opinion that Korten discloses this limitation. In particular, Korten discloses that tooth shade values from well-known tooth shade systems can be used to express the tooth shade of the patient's tooth. *See* Korten at col. 5:30-34. As one example, Korten discloses "[s]uch a standard color scheme may for example correspond to the widely used VITAPAN™ Classical tooth color scheme which typically provides the different tooth colors: A1, A2, A3, A3.5, A4, B1, B2, B3, B4, C1, C2, C3, C4, D2, D3 and D4." *See id.*

245. It is well-known in the art that the VITA Classical color scheme is used to express the color for a prepared restoration. For example, as disclosed in Lehmann I, the Vita shade guide provides dental professionals with "standardized shade guides created by companies which manufacture the reconstructive material." *See* Lehmann I at col. 1:43-45; *see also id.* at col. 2:15-18.

246. Accordingly, it is my opinion that Korten discloses this limitation. In addition, Lehmann I also discloses this limitation. To the extent necessary, it is my opinion that a POSITA would understand that the tooth shade guides described in Korten relate to shade values for teeth prepared for a dental restoration, as confirmed by the disclosures in Lehmann I.

4. Claim 12 Is Rendered Obvious

247. As explained below, it is my opinion that Korten in view of Lehmann I teaches, and therefore renders obvious, every element of claim 12.

248. Claim 12 recites: *The method according to claim 1, wherein the method comprises creating a shade profile for the tooth from shade values determined one or more points on the tooth.*

249. As noted above, with respect to claim 13 in Ground I, Korten discloses this limitation. *See supra* X.B.7.d (Ground 2, discussion for element [Claim 13c]).

5. Claim 14 Is Rendered Obvious

250. As explained below, it is my opinion that Korten in view of Lehmann I teaches, and therefore renders obvious, every element of claim 14.

a. [14Pre] A method for determining shade of a patient's tooth, wherein the method comprises:

251. As noted above, Korten discloses this limitation to the extent it is limiting. *See supra* X.D.1.a (discussion for element [Claim 1Pre]).

b. [Claim 14a] Obtaining a digital 3D representation of the tooth, where the digital 3D representation comprises shape data and texture data for the tooth;

252. As noted above, Korten discloses this limitation. *See supra* X.D.1.b (discussion for element [Claim 1a]).

c. [Claim 14b] Determining a tooth shade value for at least one point on the tooth based on the texture data

of the corresponding point of the digital 3D representation and on known texture values of one or more reference tooth shade values,

253. As noted above, Korten in view of Lehmann I discloses this limitation. *See supra* X.D.1.c (discussion for element [Claim 1b]).

d. [Claim 14c] wherein obtaining the digital 3D representation of the tooth comprises recording a series of sub-scans of the tooth, where at least one of said sub-scans comprises both texture information and geometry information for said tooth, and generating the digital 3D representation of the tooth from the recorded series of sub-scans.

254. It is my opinion that Korten discloses this limitation. For example, Korten discloses "measuring a second color at a second location on the same tooth or a further tooth in the patient's dentition, the second location being different from the first location." *See* Korten at col. 5:9-11. As part of this process, the first optical sensor may capture "the shape of that further tooth and based thereon updating the first virtual dentition model by the shape of the further tooth." *See id.* at col. 5:14-16. Further, "[t]he measured colors may be mapped relative to the first virtual dentition model at coordinates which correspond to the location at the dentition." *See id.* at col. 5:24-27.

255. The capture of the first location corresponds to the first subscan in this claim limitation, and the capture of shape and color data associated with the second location correspond to the second subscan. By incorporating the shape and color

data from the second subscan into the location coordinates determined for the first scan, the disclosed system in Korten generates the 3D representation using this series of subscans.

e. A POSITA Would Be Motivated to Combine the Accuracy Features in Lehmann I with the System Disclosed in Korten

256. The motivation to combine the accuracy feature in Lehmann I with the system disclosed in Korten overlaps with the motivation to combine described with respect to claim 1. *See supra*, X.D.1 (discussion for Claim 1).

6. Claim 15 Is Rendered Obvious

257. As explained below, it is my opinion that Korten teaches the further limitation of claim 15 such that Korten in view of Lehmann I teaches, and therefore renders obvious, every element of claim 15.

258. Claim 15 recites: *The method according to claim 14, wherein the texture data at least partly are derived by combining the texture information from corresponding parts of a number of the sub-scans.*

259. It is my opinion that Korten discloses this limitation. For example, Korten discloses "measuring a second color at a second location on the same tooth or a further tooth in the patient's dentition, the second location being different from the first location." *See* Korten at col. 5:9-11. As part of this process, the first optical sensor may capture "the shape of that further tooth and based thereon updating the

first virtual dentition model by the shape of the further tooth." *See id.* at col. 5:14-16. Korten further discloses that "colors may be measured on the same tooth or further teeth and the first virtual dentition model may be further updated by the shape of any further teeth. Thus, the entire dentition or the entire upper or lower jaw may be captured in shape and ***a plurality of colors*** may be measured thereon. The measured colors may be mapped relative to the first virtual dentition model at coordinates which correspond to the location at the dentition." *See id*. at col. 5:17-27.

260. Accordingly, because the second (and further) colors are mapped into the first virtual dentition, it is my opinion that Korten discloses "wherein the texture data at least partly are derived by combining the texture information from corresponding parts of a number of the sub-scans."

7. Claim 16 Is Rendered Obvious

261. As explained below, it is my opinion that Korten in view of Lehmann I teaches, and therefore renders obvious, every element of claim 16.

a. [Claim 16] The method according to claim 15, wherein combining the texture information from the sub-scans comprises interpolating the texture information and/or calculating an average value of the texture information.

262. Lehmann I discloses averaging the color values across the points included within a region of the tooth. For example, according to Lehmann I, each

reference image is processed so that a group of pixels covering a specific area of a tooth is identified, called a pseudo-pixel, and the intensity and color associated with the pseudo-pixel are computed. *See* Lehmann I at cols. 5:50-6:18. The intensity and color "are computed or otherwise formed as an average (or other statistical measure) of the actual pixels forming the pseudo-pixel." *See id.* at 6:15-18. Accordingly, using the averaging technique from Lehmann I in the system described in Korten in which multiple subscans are used to render a 3D image will result in the color information in Korten being averaged. It is therefore my opinion that this limitation is met.

b. A POSITA Would Be Motivated to Combine the Tooth-Color-Averaging Feature for Regions of a Patient's Tooth Disclosed in Lehmann I with the System Disclosed in Korten

263. In my opinion, a POSITA would be motivated to combine the tooth-color-averaging features in Lehmann I with the system disclosed in Korten. Both references disclose substantially overlapping technology related to providing image, color, and tooth shade information for a patient's tooth. As noted in Lehmann I, averaging the color data across pseudo pixels "reduces the total number of pixels per image and thus simplifies the task of aligning different images accurately." *See* Lehmann I at col. 7:34-37. Moreover, it is my opinion that a POSITA would have

a high expectation of success in using the color averaging technique in Lehmann I with the methods and systems disclosed in Korten.

264. Thus, because Korten and Lehmann I are in the same field, teach analogous solutions to the same shade-matching issue, and have the same purpose of providing accurate representations of patient's teeth, it is my opinion that a POSITA would have been motivated to use the color averaging feature of Lehmann I in the systems and methods disclosed by Korten.

E. Ground 5: Claim 13 Is Rendered Obvious by Korten in View of Pye

265. In my opinion, claim 13 is rendered obvious by the disclosures in Korten in view of the further disclosures in Pye. In this section, I provide my analysis for claim 13, showing how each element of that claim is disclosed in one or both of these references. At the end of each claim, where appropriate, I provide my opinion that a POSITA would have more than sufficient motivation to combine the relevant disclosures from Pye into the system described by Korten.

1. Claim 13 Is Rendered Obvious

266. As explained below, it is my opinion that Korten in view of Pye teaches, and therefore renders obvious, every element of claim 13.

a. [13Pre] A method for determining shade of a patient's tooth, wherein the method comprises:

267. As noted above, Korten discloses this limitation to the extent it is limiting. *See supra* X.A.1.a (Ground 1, discussion for element [Claim 1Pre]).

b. [Claim 13a] Obtaining a digital 3D representation of the tooth, where the digital 3D representation comprises shape data and texture data for the tooth;

268. As noted above, Korten discloses this limitation. *See supra*, X.A.1.b (Ground 1, discussion for element [Claim 1a]).

c. [Claim 13b] Determining a tooth shade value for at least one point on the tooth based on the texture data of the corresponding point of the digital 3D representation and on known texture values of one or more reference tooth shade values,

269. As noted above, Korten discloses this limitation. *See supra*, § X.A.1.c (Ground 1, discussion for element [Claim 1b]).

d. [Claim 13c] Wherein the method comprises creating a shade profile for the tooth from shade values determined one or more points on the tooth,

270. As noted above, Korten discloses this limitation. *See supra*, § X.B.7.d (Ground 2, discussion for element [Claim 13c]).

e. [Claim 13d] Wherein the tooth shade profile comprises a one or more tooth shade regions on the tooth surface where an average tooth shade is derived for each

region from tooth shade values determined for a number of points within the region.

271. It is my opinion that Korten in view of Pye discloses this limitation. As noted above, Korten discloses that tooth shade values be determined at multiple points of the tooth. According to Korten, the determination of different colors for different portions of a tooth may be used when building up the dental restoration such that the dental restoration may be comprised of different color shades. *See* Korten at col. 10:65-11:7.

272. Pye further discloses the use of dividers that may be used to "divide the tooth into regions of interest or into regions that correspond to major tooth regions (e.g., the incisal, central, etc.)." *See* Pye at col. 2:49-53. The user can move the dividers allowing "the operator to identify the appropriate regions for which corresponding information is available from a database of shade guide information." *See id.* at col. 2:54-58. As Pye further explains, "[t]he dividers allow the operator to identify two or more regions depending on the number and shape of the lines at the same time." *See id*. at col. 2:63-65. Further, display equipment may be used to "view an image of a patient's tooth and to view and use shade analyzing software features." *See id.* at col. 4:44-46. The patient's tooth may be broken into separate regions, as illustrated by the following diagram:

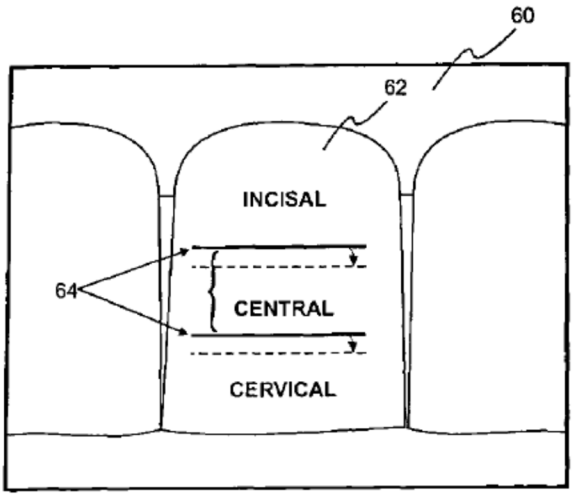

See id., Fig. 5.

273. Thus, incorporating the technique from Pye into Korten results in a system in which tooth shade values are determined from data points located in at least three different regions of the tooth – the incisal region, the central region, and the cervical region.

274. Although the above disclosure in Pye involves averaging using color data values, it is my opinion that it would be well within the skills of a POSITA to use tooth shade values as well. *See, e.g., supra* § X.B.7.e (Ground 2, discussion for element [Claim 13d]).

275. Accordingly, it is my opinion that Korten in view of Pye discloses "wherein the tooth shade profile comprises a one or more tooth shade regions on the tooth surface where an average tooth shade is derived for each region from tooth shade values determined for a number of points within the region."

2. A POSITA Would Be Motivated to Combine the Tooth-Shade-Averaging Features for Regions of a Patient's Tooth Disclosed in Pye with the System Disclosed in Korten

276. It is my opinion that a POSITA would have an overwhelming motivation to use the tooth-shade-averaging feature for tooth regions described in Pye in the shape and color measuring system described in Korten. Both references disclose substantially overlapping technology related to providing image, color, and tooth shade information for a patient's tooth. Moreover, both Korten and Pye describe as objectives of each respective system the ability to provide accurate representations related to the colors of the patient's teeth. *See, e.g.,* Korten at col. 2:13-16; Pye at col. 2:19-28 (discussing shortcomings of subjective color matching). In addition, both Korten and Pye use the same types of color and shade systems (*e.g.*, RGB for color and a VITA classic system for shade). Because of this significant amount of overlap, it is my opinion that a POSITA would expect that the shade averaging feature from Pye could be successfully used in the system described in Korten.

277. In addition, it is my opinion that a POSITA would have an overwhelming motivation to combine the tooth-shade-averaging features from Pye that averages the tooth shades across a region of the patient's tooth into the system disclosed in Korten. In particular, Pye discloses that "[t]he use of tooth regions (e.g.,

whole regions, major tooth region, etc.) for tooth shade identification allows for sufficiently accurate shade identification without requiring complex and time-consuming analysis." *See, e.g.,* Pye at col. 4:11-15.

278. Pye also discloses that once the tooth shade regions have been identified, "certain color characteristics for the regions may be captured from image 60 to generate discrete numerical values for the color characteristics for each region as a whole (e.g., RGB average values for each region)." *See id.* at col. 8:6-10. Further, such discrete numerical values may include average color values for each region. *See id.* at col. 8:12-15. Although Pye discloses the averaging of color values, as noted above, it is my opinion that a POSITA would also be capable of averaging tooth shade values, as noted in Lehmann II.

279. Further, it is my opinion that the tooth-shade-averaging technique from Pye could be successfully incorporated into the system and methods disclosed in Korten. Both references disclose that the same type of tooth color data can be captured from a tooth and that tooth shade values can be determined from those values. Accordingly, it is my opinion that a POSITA could easily implement the tooth-shade-averaging technique from Pye into Korten because doing so involves a calculation using values that the system in Korten has already obtained. Accordingly,

it is my opinion that implement this technique from Pye into the system of Korten would be a straightforward exercise for a POSITA.

280. Thus, because Korten and Pye are in the same field, teach analogous solutions to the same shade-determining issue for teeth, and have the same purpose of providing accurate representations of a patient's teeth, it is my opinion that a POSITA would be motivated to use the averaging technique for tooth regions described in Pye in the systems and methods disclosed by Korten. Moreover, as discussed above, a POSITA would have a high expectation that such a combination would be successful.

F. Ground 6: Claims 10, 16, and 17 Are Rendered Obvious by Korten in View of Babayoff

281. In my opinion, claims 10, 16, and 17 are rendered obvious by the disclosures in Korten in view of the disclosures in Babayoff. In this section, I provide my analysis for each claim, showing how each element of the claims is disclosed in one or both of these references. At the end of each claim, where appropriate, I provide my opinion that a POSITA would have more than sufficient motivation to combine the relevant disclosures from Babayoff into the system of Korten.

1. Claim 10 Is Rendered Obvious

282. As explained below, it is my opinion that Korten in view of Babayoff teaches, and therefore renders obvious, every element of claim 10.

a. [Claim 10] The method according to claim 1, wherein the method comprises comparing the texture data with known texture values for soft oral tissue, such as gum tissue and gingiva.

283. As noted above, Babayoff discloses this limitation. *See supra* X.C.1.a (Ground 3, discussion for element [Claim 10]).

b. A POSITA Would Be Motivated to Combine the Gingiva Identification Feature in Babayoff with the System of Korten

284. As noted above, a POSITA would be motivated to combine the gingiva identification feature from Babayoff into the combined system of Korten and Lehmann II. *See supra* X.C.1.b (Ground 3, motivation to combine). For the same reasons, it is my opinion that a POSITA would be motivated to combine the gingiva identification feature from Babayoff into the system of Korten.

2. Claim 16 Is Rendered Obvious

285. As explained below, it is my opinion that Korten in view of Babayoff teaches, and therefore renders obvious, every element of claim 16.

a. [Claim 16] The method according to claim 15, wherein combining the texture information from the sub-scans

comprises interpolating the texture information and/or calculating an average value of the texture information.

286. As noted above, Babayoff discloses this limitation. *See supra* X.C.2.a (Ground 3, discussion for element [Claim 16]).

b. A POSITA Would Be Motivated to Combine the Color Averaging Feature in Babayoff with the Combined System of Korten and Lehmann II

287. As noted above, a POSITA would be motivated to combine the color averaging feature from Babayoff into the combined system of Korten and Lehmann II. *See supra* X.C.2.b (Ground 3, motivation to combine). For the same reasons, it is my opinion that a POSITA would be motivated to combine the color averaging feature from Babayoff into the system of Korten.

3. Claim 17 Is Rendered Obvious

288. As explained below, it is my opinion that Korten in view Babayoff teaches, and therefore renders obvious, every element of claim 17.

a. [Claim 17] The method according to claim 16, wherein the calculated average value is a weighted average of the texture information.

289. As noted above, Babayoff discloses this limitation. *See supra* X.C.3.a (Ground 3, discussion for element [Claim 17]).

b. A POSITA Would Be Motivated to Combine the Weighted Averaging Feature for Color in Babayoff with the System of Korten

290. As noted above, a POSITA would be motivated to combine the weighted averaging feature from Babayoff into the combined system of Korten and Lehmann II. *See supra* X.C.3.b (Ground 3, motivation to combine). For the same reasons, it is my opinion that a POSITA would be motivated to combine the color averaging feature from Babayoff into the system of Korten.

XI. CONCLUSION

291. I declare that all statements made herein of my knowledge are true, and that all statements made on information and belief are believed to be true, and that these statements were made with the knowledge that willful false statements and the like so made are punishable by fine or imprisonment, or both, under Section 1001 of Title 18 of the United States Code.

Dated: August 18, 2023

By: _____
Hassan Foroosh, Ph.D.