Trials@uspto.gov
571-272-7822

Paper 6
Date: March 28, 2024

UNITED STATES PATENT AND TRADEMARK OFFICE

BEFORE THE PATENT TRIAL AND APPEAL BOARD

MEDIT CORPORATION,
Petitioner,

v.

3SHAPE A/S,
Patent Owner.

IPR2023-01315
Patent 10,695,151 B2

Before HUBERT C. LORIN, MICHELLE N. WORMMEESTER, and JAMES J. MAYBERRY, *Administrative Patent Judges*.

MAYBERRY, *Administrative Patent Judge*.

DECISION
Granting Institution of *Inter Partes* Review
35 U.S.C. § 314

I. INTRODUCTION

A. Background and Summary

Medit Corporation ("Petitioner") filed a Petition (Paper 1, "Pet.") requesting *inter partes* review of claims 1, 2, 4, 5, 9, 10, and 12–17 of U.S. Patent No. 10,695,151 B2 (Ex. 1001, "the '151 patent"). 3Shape A/S ("Patent Owner") filed a Preliminary Response (Paper 5, "Prelim. Resp.").

We have authority to determine whether to institute an *inter partes* review. 35 U.S.C. § 314 (2018); 37 C.F.R. § 42.4(a) (2023) (permitting the Board to institute trial on behalf of the Director). To institute an *inter partes* review, we must determine that the information presented in the Petition shows "a reasonable likelihood that the petitioner would prevail with respect to at least 1 of the claims challenged in the petition." 35 U.S.C. § 314(a). Instituting an *inter partes* review, however, is discretionary. *See Harmonic Inc. v. Avid Tech., Inc.*, 815 F.3d 1356, 1367 (Fed. Cir. 2016) ("[T]he PTO is permitted, but never compelled, to institute an IPR proceeding."). For the reasons set forth below, we institute an *inter partes* review.

B. Related Proceedings

Petitioner indicates, and Patent Owner agrees, that the '151 patent is asserted in *3Shape A/S v. Carestream Dental, LLC,* Case No. 1:22-cv-01829 (N.D. Ga.)*, and 3Shape A/S v. Medit Corp.,* Case No. W-22-CV-00443-ADA-DTG (W.D. Tex.). Pet. 66; Paper 3, 1.

The parties also identify the '151 patent as challenged in *Dental Imaging Technologies Corporation d/b/a/ DEXIS v. 3Shape A/S*, IPR2023-00400. Pet. 66; Paper 3, 1. Patent Owner indicates the petition in IPR2023-00400 was denied. Paper 3, 1; *see also* IPR2023-00400, Paper 7 (providing decision denying institution), Paper 8 (providing petitioner's request for Director Review), Paper 9 (denying Director Review).

C. The '151 patent (Ex. 1001)

The '151 patent, titled "Detecting Tooth Shade," issued June 30, 2022, from an application filed February 5, 2018, and ultimately claims priority to a foreign application filed February 7, 2014. Ex. 1001, codes (22), (30), (45), (54). The '151 patent "relates to methods and . . . user interfaces for determining the shade of a patient's tooth or teeth and for utilizing the determined tooth shades for designing and manufacturing dental restorations." *Id.* at 1:19–22. The '151 patent explains that "[w]hen designing and manufacturing a dental restoration for a patient, such as a crown or a bridge restoration, it is advantageous that both the shape and shade of the manufactured restoration is adapted to the patient's natural teeth surrounding the restoration." *Id.* at 1:23–27.

The '151 patent explains that "[i]n many cases, the dental restoration is manufactured with a shade profile where the shade differs from the incisal edge towards cervical end of the restoration." Ex. 1001, 2:57–59. The '151 patent describes embodiments that allow "the operator to determine tooth shade values for several points on the tooth such that a shade profile can be determined for the dental restoration." *Id.* at 2:59–62. The '151 patent describes a method for determining shade of a patient's tooth that includes obtaining a digital 3D representation of the tooth. *Id.* at 2:6–8. "[T]he digital 3D representation comprises shape data and texture data for the tooth." *Id.* at 2:9–10.

Figure 7A, reproduced below, depicts a schematic of intra-oral scanning according to an embodiment of the '151 patent. Ex. 1001, 15:50–51.

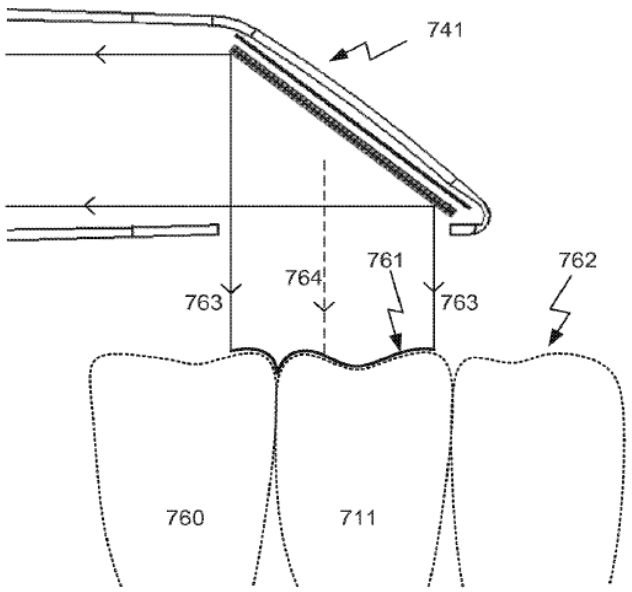

Figure 7A depicts a cross-sectional view of scanner 741 and teeth 711, 760. *Id.* at 16:10–13. Scanner 741 "is held in one position relative to" teeth 711, 760 "while recording a sequence of 2D images for one sub-scan." Ex. 1001, 16:10–14. Full line 761 represents the field of view of the scanner and "is determined by the light source, the optical components and the image sensor of the scanner." *Id.* at 16:15–18. "Field of View 761 covers part of the surface of the tooth 711 and part of the surface of the neighbor tooth 760." *Id.* at 16:19–21. "The generated digital 3D representation can thus also contain data for the neighbor teeth." *Id.* at 16:21–22. Scanner 741 "is arranged such that the acquired sub-scan comprises shape and color information for the incisal edge 762 of the teeth." *Id.* at 16:26–28. Probe light rays 763 from the scanner correspond to the perimeter of the field of view and "define the optical path 764 of the scanner probe light at the tooth 711." *Id.* at 16:28–32. The '151 patent further describes that a "digital 3D representation of the tooth can be generated by combining sub-scans

acquired from different orientations relative to the teeth, e.g. by sub-scan registration." *Id.* at 16:33–35.

The '151 patent further discloses that the texture data of the tooth "can be a texture profile expressing the variation in the texture over the tooth," but in "some embodiments, the texture information comprises at least one of tooth color or surface roughness." Ex. 1001, 2:32–38.

> When the texture information comprises tooth color information, the texture data expressing a texture profile of the tooth may be color data expressing a color profile of the tooth, and the tooth shade value for a point on the tooth may be derived by comparing the color data of the corresponding point of the digital 3D representation with known color values of one or more reference tooth shade values.

Id. at 2:39–45.

D. Challenged Claims

Petitioner challenges claims 1, 2, 4, 5, 9, 10, and 12–17. Pet. 1. Claims 1, 13, and 14 are independent claims. We reproduce these independent claims below, adding bracketing to assist in referring to the claim limitations.[1]

> 1. [1Pre] A method for determining shade of a patient's tooth, wherein the method comprises:
>
> [1a] obtaining a digital 3D representation of the tooth, where the digital 3D representation comprises shape data and texture data for the tooth; and
>
> [1b] determining a tooth shade value for at least one point on the tooth based on the texture data of the corresponding point of the digital 3D representation and on known texture values of one or more reference tooth shade values,

[1] We use Petitioner's designations for the bracketed limitation labels. Pet. viii–x.

> [1c] wherein the method comprises deriving a certainty score expressing the certainty of the determined tooth shade value.

Ex. 1001, 21:28–40.

> 13. [13Pre] A method for determining shade of a patient's tooth, wherein the method comprises:
>
> [13a] obtaining a digital 3D representation of the tooth, where the digital 3D representation comprises shape data and texture data for the tooth; and
>
> [13b] determining a tooth shade value for at least one point on the tooth based on the texture data of the corresponding point of the digital 3D representation and on known texture values of one or more reference tooth shade values,
>
> [13c] wherein the method comprises creating a shade profile for the tooth from shade values determined one or more points on the tooth,
>
> [13d] wherein the tooth shade profile comprises a one or more tooth shade regions on the tooth surface where an average tooth shade is derived for each region from tooth shade values determined for a number of points within the region.

Ex. 1001, 22:19–36.

> 14. [14Pre] A method for determining shade of a patient's tooth, wherein the method comprises:
>
> [14a] obtaining a digital 3D representation of the tooth, where the digital 3D representation comprises shape data and texture data for the tooth; and
>
> [14b] determining a tooth shade value for at least one point on the tooth based on the texture data of the corresponding point of the digital 3D representation and on known texture values of one or more reference tooth shade values,

> [14c] wherein obtaining the digital 3D representation of the tooth comprises recording a series of sub-scans of the tooth, where at least one of said sub-scans comprises both texture information and geometry information for said tooth, and generating the digital 3D representation of the tooth from the recorded series of sub-scans.

Ex. 1001, 22:37–52.

E. Asserted Grounds

Petitioner contends that claims 1, 2, 4, 5, 9, 10, and 12–17 of the '151 patent are unpatentable under the following grounds:

Claims Challenged	35 U.S.C. §	Reference(s)/Basis
1, 12, 14, 15	102[2]	Korten[3]
1, 2, 4, 5, 9, 12–16	103	Korten, Lehmann II[4]
10, 16, 17	103	Korten, Lehmann II, Babayoff[5]
1, 2, 9, 12, 14–16	103	Korten, Lehmann I[6]

[2] The Leahy-Smith America Invents Act ("AIA"), Pub. L. No. 112-29, 125 Stat. 284, 296–07 (2011), took effect on September 16, 2011. The changes to 35 U.S.C. §§ 102 and 103 in the AIA do not apply to any patent application filed before March 16, 2013. Because the earliest possible priority date for the '554 patent is after March 16, 2013, we refer to the AIA version of the statute.
[3] U.S. Patent 10,028,810 B2, issued July 24, 2018, from a European application filed April 29, 2013 (Ex. 1009, "Korten")
[4] U.S. Patent Appl. Pub. 2011/0188086 A1, published Aug. 4, 2011 (Ex. 1011, "Lehmann II").
[5] U.S. Patent 7,698,068 B2, issued Apr. 13, 2010 (Ex. 1013, "Babayoff").
[6] U.S. Patent 6,206,691 B1, issued Mar. 27, 2001 (Ex. 1010, "Lehmann I").

Claims Challenged	35 U.S.C. §	Reference(s)/Basis
13	103	Korten, Pye[7]
10, 16, 17	103	Korten, Babayoff

Pet. 3. Petitioner also relies on the Declaration of Hassan Foroosh, Ph.D. (Ex. 1015, "Foroosh Decl.").

The following subsections provide brief descriptions of the asserted prior art references.

1. Korten (Ex. 1009)

Korten is titled "Method of Capturing Data from a Patient's Dentition and System for Performing Such Method." Ex. 1009, code (54). Korten "relates to a method and a system which allows for capturing the shape and for measuring the color in independent steps and for providing a correlation between the captured shape and the location at which the color is measured." *Id.* at 1:7–13.

The specific method of Korten involves the following steps: positioning a first optical sensor relative to patient's dentition; capturing via the first optical sensor at least a portion of the shape of a tooth in the patient's dentition and based thereon providing a first virtual dentition model representing that shape in a three-dimensional coordinate system; independent from capturing the shape, measuring a first color at a first location on the tooth portion; and providing a correlation between the first location of the first color and a coordinate in the first virtual dentition model.

[7] U.S. Patent 7,341,450 B2, issued Mar. 11, 2008 (Ex. 1012, "Pye").

Id. at 2:1–12. The "invention preferably allows measuring color and accounting for translucency and reflectivity of the tooth at which the color is measured," using a spectrometer. *Id.* at 2:23–42.

Korten's system first captures "at least a portion of the shape of a tooth," and "[b] ased on the captured shape a first virtual dentition model is provided which preferably represents that shape in a three-dimensional coordinate system." *Id.* at 8:25–27. "The measurement of color, for example the first color, is performed independent from capturing the shape. This means that preferably the data from capturing the shape are not used to derive color therefrom, but that separate data about the color are measured in addition to the shape data." *Id.* at 8:29–34. Then, the "shape data and color data are preferably subsequently correlated such that particular measured colors are brought in association with particular coordinates or locations in the corresponding first virtual dentition model of the tooth portions of which the color were measured." *Id.* at 8:34–39.

2. Lehmann I (Ex. 1010)

Lehmann I is titled "System and Methods for Analyzing Tooth Shades." Ex. 1010, code (54). The patent is "directed to computer-based system and methods for analyzing color images of one or more teeth and comparing them to known tooth shades for use in certain clinical or cosmetic procedures." *Id.* at 1:16–21.

Lehmann I describes that a "necessary step in the modification of a patient's tooth color is to determine the 'shade' of an existing tooth." Ex. 1010, 1:33–34. The patent describes that prior "attempts to measure tooth shade . . . fail for various reasons, including primarily color contamination due to reflection and/or tooth translucency." *Id.* at 2:49–52. Also, "prior art using calorimeters [(*sic*, "colorimeters")] often samples a

single tooth location in attempt to analyze its color," which "fails to adequately characterize the entire spatial extent of the tooth, much less address the issue of matching the shade of one tooth to the shades of adjacent teeth." *Id.* at 2:55–60.

In Lehmann I, a "camera captures digital color images of the tooth, which are processed to form pseudo-pixels corresponding to areas of the tooth surface, and then compared to images of tooth shades relating to reference shade guides." Ex. 1010, 3:27–31. "[T]he camera is equipped with a sleeve and illumination Subsystems that help reduce the variations in the color of digital images due to external factors." *Id.* at 3:33–36. After taking images of known reference teeth colors, and images of subject teeth, each image is processed into "pseudo-pixels," where "each pseudo-pixel 44 is made up of all or some of the real pixels within the area of the associated pseudo-pixel." *Id.* at 5:5–62. Then, "the intensity and color associated with a pseudo-pixel are computed or otherwise formed as an average (or other statistical measure) of the actual pixels forming the pseudo-pixel." *Id.* at 6:15–18. In a subsequent step:

> each pseudo pixel of the REAL IMAGE is compared to each pseudo-pixel of the REFERENCE IMAGE; and a composite match number ("CMN") is created indicating how well the REAL IMAGE matches to that REFERENCE IMAGE. The composite match numbers are compared to one another and one of the REFERENCE IMAGES is selected as the "best fit" match to the REAL IMAGE.

Id. at 9:35–42.

3. Lehmann II (Ex. 1011)

Lehmann II, titled "Tooth Shade Analyzer System and Methods," addresses procedures involving the modification of tooth shape, alignment, and color. Ex. 1011, code (55), ¶ 2.

Lehmann II describes that a "necessary step in altering a patient's tooth color is to determine the 'shade' of the existing tooth." Ex. 1011 ¶ 4. Once the tooth shade is determined, the information is used for the particular procedure needed. *Id.* ¶ 7. Lehmann's system entails

> electronically imaging a patient's tooth to obtain an image which includes color information representative of tooth color, determining the patient's tooth color from the color information of the image; and displaying the determined tooth color to identify one or more tooth shades having a combined color corresponding to the determined tooth color.

Id. ¶ 11. Identifying a tooth color involves "comparing the determined tooth color to a plurality of electronically stored tooth shades." *Id.* ¶ 13. The color information of the patient's tooth may be compared to the plurality of tooth shade guides on a pixel-by-pixel basis. *Id.* ¶ 17.

4. Pye (Ex. 1012)

Pye relates to "tooth shade analysis tools." Ex. 1012, 1:6–7. Pye describes that "known techniques do not appear to desirably address limitations that exist in processing, communications, storage, and/or other capabilities with respect to hardware or software equipment used in shade analyzing." *Id.* at 2:34–38. To improve on known techniques, Pye discloses "tooth shade scan systems and methods . . . in which shade information for a restorative product for a patient's tooth is obtained." *Id.* at 2:43–46. Pye's system "displays an image of the patient's tooth and displays dividers by which an operator can divide the tooth into regions of interest or into regions that correspond to major tooth regions (e.g., the incisal, central, etc.)." *Id.* at 2:49–53. "Once regions of interest are identified, color characteristics for those regions are obtained." *Id.* at 3:1–2.

Figure 5, reproduced below, shows

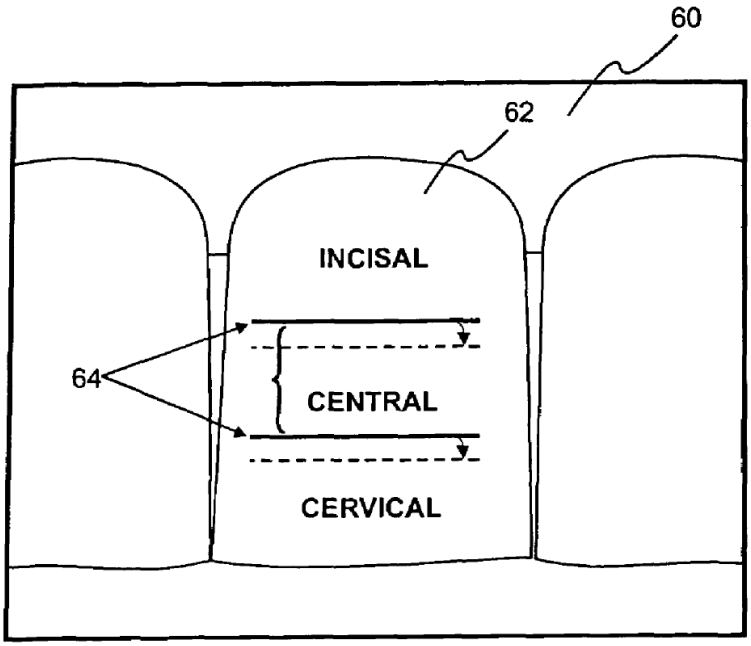

Figure 5 shows a diagram of a user interface in a shade analyzing system, showing image 60 or a patient's mouth, with tooth 62, and lines 64 that divide the tooth into three regions: incisal, central, and cervical. Ex. 1012, 7:51–61.

5. Babayoff (Ex. 1013)

Babayoff, titled "Method for Providing Data Associated with the Intraoral Cavity," "relates to color three-dimensional numerical entities representative of tissues, particularly of the intraoral cavity" and more particularly, "the manipulation of such entities to provide data that is useful in procedures associated with the oral cavity, [e]specially dental surfaces thereof." Ex. 1013, code (54), 1:16–22. Relevant to this proceeding, Babayoff discloses a system that differentiates between two types of tissue, for example, hard tissue, such as teeth and soft tissue, such as gums, tongue, cheeks, and lips. *Id.* at 4:25-39; 21:1-12.

II. ANALYSIS

A. Legal Standards

Petitioner's asserted grounds of unpatentability are based on anticipation under 35 U.S.C. § 102 and on obviousness under 35 U.S.C. § 103. A "prior art reference—in order to anticipate under 35 U.S.C. § 102—must not only disclose all elements of the claim within the four corners of the document, but must also disclose those elements 'arranged as in the claim.'" *Net MoneyIN, Inc. v. VeriSign, Inc.*, 545 F.3d 1359, 1369 (Fed. Cir. 2008) (quoting *Connell v. Sears, Roebuck & Co.*, 722 F.2d 1542, 1548 (Fed. Cir. 1983)).

With respect to obviousness under 35 U.S.C. § 103,

> [a] patent for a claimed invention may not be obtained, notwithstanding that the claimed invention is not identically disclosed as set forth in section 102, if the differences between the claimed invention and the prior art are such that the claimed invention as a whole would have been obvious before the effective filing date of the claimed invention to a person having ordinary skill in the art to which the claimed invention pertains. Patentability shall not be negated by the manner in which the invention was made.

35 U.S.C. § 103 (2011); *see KSR Int'l Co. v. Teleflex Inc.*, 550 U.S. 398, 406 (2007). The question of obviousness is resolved on the basis of underlying factual determinations, including: (1) the scope and content of the prior art; (2) any differences between the claimed subject matter and the prior art; (3) the level of ordinary skill in the art; and (4) when available, objective evidence, such as commercial success, long felt but unsolved needs, and failure of others. *Graham v. John Deere Co.*, 383 U.S. 1, 17–18 (1966); *see KSR Int'l Co.*, 550 U.S. at 407 ("While the sequence of these questions

might be reordered in any particular case, the [Graham] factors continue to define the inquiry that controls."). The Court in *Graham* explained that these factual inquiries promote "uniformity and definiteness," for "[w]hat is obvious is not a question upon which there is likely to be uniformity of thought in every given factual context." 383 U.S. at 18.

The Supreme Court made clear that we apply "an expansive and flexible approach" to the question of obviousness. *KSR Int'l Co.*, 550 U.S. at 415. Whether a patent claiming the combination of prior art elements would have been obvious is determined by whether the improvement is more than the predictable use of prior art elements according to their established functions. *Id.* at 417. To support this conclusion, however, it is not enough to show merely that the prior art includes separate references covering each separate limitation in a challenged claim. *Unigene Labs., Inc. v. Apotex, Inc.*, 655 F.3d 1352, 1360 (Fed. Cir. 2011). Rather, obviousness additionally requires that a person of ordinary skill at the time of the invention "would have selected and combined those prior art elements in the normal course of research and development to yield the claimed invention." *Id.*

"[O]bviousness must be determined in light of *all the facts*, and . . . a given course of action often has simultaneous advantages and disadvantages, and this does not necessarily obviate motivation to combine" teachings from multiple references. *Medichem, S.A. v. Rolabo, S.L.*, 437 F.3d 1157, 1165 (Fed. Cir. 2006) (emphasis added); *see also PAR Pharm., Inc. v. TWI Pharms., Inc.*, 773 F.3d 1186, 1196 (Fed. Cir. 2014) ("The presence or absence of a motivation to combine references in an obviousness determination is a pure question of fact."). As a factfinder, we also must be

aware "of the distortion caused by hindsight bias and must be cautious of arguments reliant upon *ex post* reasoning." *KSR Int'l Co.*, 550 U.S. at 421.

For institution, "[t]he 'reasonable likelihood' standard is a somewhat flexible standard that allows the Board room to exercise judgment." Patent Trial and Appeal Board Consolidated Trial Practice Guide 53 (Nov. 2019), *available at* https://www.uspto.gov/TrialPracticeGuideConsolidated.

B. Level of Ordinary Skill in the Art

The level of skill in the art is "a prism or lens" through which we view the prior art and the claimed invention. *Okajima v. Bourdeau*, 261 F.3d 1350, 1355 (Fed. Cir. 2001). "This reference point prevents . . . factfinders from using their own insight or, worse yet, hindsight, to gauge obviousness." *Id.* Factors pertinent to a determination of the level of ordinary skill in the art include: (1) educational level of the inventor; (2) type of problems encountered in the art; (3) prior art solutions to those problems; (4) rapidity with which innovations are made; (5) sophistication of the technology; and (6) educational level of workers active in the field. *Env't Designs, Ltd. v. Union Oil Co.*, 713 F.2d 693, 696–97 (Fed. Cir. 1983) (citing *Orthopedic Equip. Co. v. All Orthopedic Appliances, Inc.*, 707 F.2d 1376, 1381–82 (Fed. Cir. 1983)). Not all such factors may be present in every case, and one or more of these or other factors may predominate in a particular case. *Id.* Moreover, these factors are not exhaustive but are merely a guide to determining the level of ordinary skill in the art. *Daiichi Sankyo Co. v. Apotex, Inc.*, 501 F.3d 1254, 1256 (Fed. Cir. 2007). In determining a level of ordinary skill, we also may look to the prior art, which may reflect an appropriate skill level. *Okajima*, 261 F.3d at 1355.

Petitioner contends that a person having ordinary skill in the art "would have had at least a bachelor's degree in Computer Engineering,

Computer Science, Computer Vision, or an equivalent field, as well as at least two years of imaging/image analysis experience, or alternatively, at least six years of comparable industry experience." Pet. 10 (citing Ex. 1015 ¶ 67). Patent Owner does not address the level of ordinary skill in the art.

For the purposes of this Decision, we apply Petitioner's definition of the level of ordinary skill in the art. We determine that this definition is consistent with the prior art of record and the skill reflected in the Specification of the '151 patent, based on our review of the limited record. Although all of the asserted prior art are directed to the dental field, our preliminary review indicates that the described technology most closely relates to imaging and image analysis. *See* Exs. 1009, 1010, 1011, 1012, 1013; *see also* Ex. 1015 ¶ 19 ("The '151 patent discloses methods and apparatus that come under the general umbrella of computer vison and image processing.").

C. Claim Construction

In *inter partes* reviews, we interpret a claim "using the same claim construction standard that would be used to construe the claim in a civil action under 35 U.S.C. 282(b)." 37 C.F.R. § 42.100(b). Under this standard, we construe the claim "in accordance with the ordinary and customary meaning of such claim as understood by one of ordinary skill in the art and the prosecution history pertaining to the patent." *Id.*

Petitioner provides that the term "deriving a certainty score" was construed by the District Court in the parallel district court litigation to mean "determining an accuracy value based on the tooth shade value, the texture data, and/or texture information." Pet. 11 (citing Ex. 1003, 3). Patent Owner contends that "[t]he decision on whether to institute trial is not

dependent on the constructions that the parties offered in the parallel litigation." Prelim. Resp. 4.

We determine that we need not expressly construe any claim terms to resolve the parties' disputes on the current record. *See Realtime Data, LLC v. Iancu*, 912 F.3d 1368, 1375 (Fed. Cir. 2019) ("The Board is required to construe 'only those terms that . . . are in controversy, and only to the extent necessary to resolve the controversy.'") (quoting *Vivid Techs., Inc. v. Am. Sci. & Eng'g, Inc.*, 200 F.3d 795, 803 (Fed. Cir. 1999)). To the extent that the scope of any particular claim term requires discussion, however, we provide it in our assessment of the challenges, which we turn to next.

D. Ground 1: Claims 1, 12, 14, and 15 as anticipated by Korten

Petitioner challenges claims 1, 12, 14, and 15 as anticipated under 35 U.S.C. § 102 by Korten. Pet. 23–29.

1. Independent claim 1

We address Petitioner's contentions, and Patent Owner's counter arguments, directed to claim 1 on a limitation-by-limitation basis.

a. Preamble

The preamble of claim 1 recites "[a] method for determining shade of a patient's tooth." Ex. 1001, 21:28. Petitioner contends that the preamble is not limiting. Pet. 23. Petitioner adds, however, that Korten discloses a method for determining the shade of a patient's teeth. *Id.* (referencing Ex. 1009, 1:9–13, 5:28–30; Ex. 1015 ¶¶ 107–108).

Upon review of the information in the Petition and corresponding evidence, we determine Petitioner has sufficiently demonstrated, at this stage of the proceeding, that Korten discloses the subject matter of the preamble. In view of this determination, we need not resolve, at this stage of the proceeding, whether the preamble is limiting.

Patent Owner does not dispute Petitioner's contentions with respect to the preamble at this stage of the proceeding.

b. Limitation 1[a]

Claim 1 also recites the step of "obtaining a digital 3D representation of the tooth, where the digital 3D representation comprises shape data and texture data for the tooth." Ex. 1001, 21:30–32 (limitation 1[a]). Petitioner contends that Korten discloses that its system captures the shape of one or more teeth. Pet. 23–24 (referencing 7:64–66, Fig. 1; Ex. 1015 ¶ 109); *see also id.* at 24 (reproducing Korten's Figure 1). Petitioner adds that Korten's system "can provide—based on the captured shape—a first virtual dentition model representing that shape in a three-dimensional coordinate system." *Id.* at 24 (referencing Ex. 1009, 7:66–8:2; Ex. 1015 ¶ 109).

Petitioner contends that Korten's system measures the color of a patient's dentition and that the measurements are associated with a coordinate in the virtual model. Pet. 24 (referencing Ex. 1009, 4:41–45. Ex. 1015 ¶ 110); *see id.* at 24–25 (contending that Petitioner's position is the same as Patent Owner has previously admitted). Petitioner adds that the '151 patent expressly states that texture data may comprise color data. *Id.* at 25 (referencing Ex. 1001, 5:51; Ex. 1015 ¶ 112); *see also* Ex. 1001, 2:39–42 ("When the texture information comprises tooth color information, the texture data expressing a texture profile of the tooth may be color data expressing a color profile of the tooth . . . ."), 5:51–54 ("When the texture data comprises color data, selecting the tooth shade value of the point can comprise calculating the color difference between the determined color data in the point and the color data of the reference tooth shade values.").

Upon review of the information in the Petition and corresponding evidence, we determine Petitioner has sufficiently demonstrated, at this stage of the proceeding, that Korten discloses the subject matter of limitation 1[a].

Patent Owner does not dispute Petitioner's contentions with respect to this limitation at this stage of the proceeding.

c. Limitation 1[b]

Claim 1 also recites the step of "determining a tooth shade value for at least one point on the tooth based on the texture data of the corresponding point of the digital 3D representation and on known texture values of one or more reference tooth shade values." Ex. 1001, 21:33–37 (limitation 1[b]). Petitioner contends that tooth color is matched to a color from a standard color scheme, such as VITAPAN Classical. Pet. 25. Petitioner explains that "Korten discloses that color data [such as 'the first color'] is captured on a point-by-point basis such that each captured XYZ location on the surface of the tooth will have color data that corresponds to that point on the tooth." *Id.* at 25–26 (referencing Ex. 1009, 4:41–45; Ex. 1015 ¶ 114). As such, the color data of a point on the three-dimensional digital model is used to determine the tooth shade value at that point based on a known color scheme. *See id.*

Patent Owner appears to argue that the recited "texture data" is different from the color data collected in Korten's method. Prelim. Resp. 8–9; *see, e.g.*, *id.* at 9 (indicating that texture data "includes color data," implying that texture data requires more than just color data). Patent Owner argues that "Petitioner makes no mention of providing tooth shade based [on] a point on a 3D representation and known texture values of one or more reference tooth shade values. Instead, Korten discloses comparing a directly measured tooth color with reference tooth shade values." *Id.* at 10.

Patent Owner argues that "obtaining color of a point on the tooth is not the same as providing tooth shade based on texture data of the corresponding point of a 3D digital representation and known texture values of one or more reference tooth shade values." *Id.* at 10–11.

We have considered Patent Owner's argument and determine, on the current record, that Petitioner's contentions are sufficient for institution. As Petitioner indicates, the '151 patent expressly states that texture data can be color data. *See* Pet. 25; Ex. 1001, 2:37–38 ("In some embodiments, the texture information comprises *at least one of* tooth color or surface roughness." (emphasis added)), 2:39–42 ("When the texture information comprises tooth color information, the texture data expressing a texture profile of the tooth may be color data expressing a color profile of the tooth . . . ."), 5:51–54 ("When the texture data comprises color data, selecting the tooth shade value of the point can comprise calculating the color difference between the determined color data in the point and the color data of the reference tooth shade values."). To the extent Patent Owner implies a construction of the term "texture data" to *require* something other than color data, Patent Owner does not provide any arguments or supporting evidence for such a construction.[8]

As we discuss above, the Petition indicates that Korten's method discloses 1) collecting color data and associating that data with a point on a three-dimensional digital model of a tooth, along with shape data and 2) determining a tooth shade value by matching that data with known color shade values from a standard color scheme. *See* Pet. 23–26. Petitioner

[8] Our claim construction analysis in this Decision is preliminary and the parties are free to argue claim construction during trial.

explains that color data can be the recited "texture data." *Id.* at 25. Patent Owner fails to explain sufficiently how this disclosure fails to anticipate the step recited in limitation 1[b].

Accordingly, upon review of the information in the Petition and corresponding evidence, including Patent Owner's counter arguments, we determine Petitioner has sufficiently demonstrated, at this stage of the proceeding, that Korten discloses the subject matter of limitation 1[b].

d. Limitation 1[c]

Finally, claim 1 recites "wherein the method comprises deriving a certainty score expressing the certainty of the determined tooth shade value." Ex. 1001, 21:38–40 (limitation 1[c]). Petitioner contends that "Korten discloses that the color data from the location on the patient's tooth may be compared to the standard color data from a standard color data scheme to find a matching standard color," as discussed above in connection with our analysis of limitation 1[b]. Pet. 26; *see also id.* at 25–26 (providing Petitioner's analysis for limitation 1[b]). Petitioner contends that, in making this comparison, Korten's system "would *need* to compare the color data of the first color with each of the standard colors to find the closest match." *Id.* at 26 (referencing Ex. 1015 ¶ 115 (emphasis added)).

Petitioner explains that "Korten, in fact, discloses 'comparing the measured first color and the reference color, and—depending on the degree of similarity or the match between the measured first color and the reference color—determining the validity of the measured first color.'" Pet. 26–27 (referencing Ex. 1009, 4:60–5:6; Ex. 1015 ¶ 115). Petitioner adds that "Korten further discloses that '[a] mismatch between the measured first color and the reference color may trigger a further method step of issuing an

error signal,' and that the limits for finding an acceptable mismatch 'may be adjustable.'" *Id.* at 27 (referencing Ex. 1009, 5:2–6; Ex. 1015 ¶ 115).

Petitioner contends that Korten's method derives a certainty score as that term was construed at the District Court. *See* Pet. 27. Petitioner contends that a person having ordinary skill in the art would have understood "that the technology in Korten calculates a 'certainty score' under [the District Court's] construction because it measures how accurately the standard color data for each standard tooth shade value matches the color data from the patient's tooth." *Id.* Petitioner contends that, in Korten's method, "accuracy values *must be calculated*, and the accuracy values *must be based* on a comparison of the reference tooth shade values and the color values (*i.e.* texture values) for the teeth." *Id.* (referencing Ex. 1015 ¶ 116) (emphasis added).

Patent Owner argues that Petitioner does not provide any "underlying facts in support of" its contention that a person having ordinary skill in the art would have understood that Korten calculates a certainty score. Prelim. Resp. 11. Patent Owner argues that "institution should be denied when the expert declaration presents conclusory assertions without underlying factual support and repeats verbatim the petitioner's argument." *Id.* (citing *Xerox Corp. v. Bytemark, Inc.*, IPR2022-00624, Paper 9 (PTAB Aug. 24, 2022), Paper 12 (PTAB Feb. 10, 2023)).

Patent Owner argues that Petitioner fails to explain how any of the statements from Korten upon which Petitioner relies "amount to deriving a certainty score expressing the certainty or accuracy of the determined tooth shade value." Prelim. Resp. 12. Patent Owner argues that "Petitioner offers no evidence, other than unsupported expert testimony from Dr. Foroosh, that [Korten's] comparison of the first color with each of the standard colors to

find the closest match requires deriving a certainty score or accuracy value based on data in a digital [three-dimensional] representation." *Id.* at 13. Patent Owner argues that "[c]omparing colors or finding mismatches are simply not the same as obtaining a certainty score or accuracy value let alone the expression of the certainty score of the determined tooth shade value as recited in [c]laim 1." *Id.* at 14.

Patent Owner argues that "Petitioner and its expert provide no underlying facts supporting its assertion that as part of the Korten process, accuracy values must be calculated, and the accuracy values must be based on a comparison of the reference tooth shade values and the color values (*i.e.* texture values) for the teeth." Prelim. Resp. 14. Patent Owner argues that "measuring the validity of the measured first color of a tooth is not the same as 'deriving a certainty score expressing the certainty of the determined tooth shade value[,]" and that "Korten makes no reference to determining accuracy of a determined tooth shade color-based texture data of the corresponding point of a digital representation." *Id.* at 15.

We have considered Patent Owner's argument and determine, on the current record, that Petitioner's contentions are sufficient for institution. We do not agree that Petitioner does not explain how Korten must disclose a certainty score or accuracy value expressing the certainty of the determined tooth shade value. Petitioner starts with its contention that Korten discloses comparing texture data associated with points on a digital three-dimensional model of a patient's tooth or teeth, in this case, color data, with data representing standard tooth shades, such as those in the VITAPAN Classical tooth color scheme. *See* Pet. 23–25 (describing how Korten discloses generating a digital three-dimensional model of a tooth having shape and color data), *id.* at 25–26 (describing how the color data corresponding to

points on the digital three-dimensional model of the tooth are compared reference tooth shade values).

Next, Petitioner explains that Korten discloses that, as part of the comparison of the color data and the reference tooth shade values, its system determines the validity of the measured color data. *See* Pet. 26–27 (referencing Ex. 1009, 4:60–5:6). Petitioner adds that Korten also discloses that, based on this validity determination, the system may issue an error signal indicating a mismatch between the measured color data and the reference color. We understand Petitioner to contend that, in making these determinations, a certainty score indicating the accuracy of the measured color data must calculated. *See* Pet. 27; *see also* Ex. 1007, 1 (defining "accuracy" as "degree of conformity of a measure to a standard or a true value"). That is, in order for Korten's system to determine if the measured color data is valid as compared to the reference tooth shade values, or in order to generate an error signal based on the validity determination, Korten must calculate the accuracy of the color data as compared to the standard tooth shade values. We determine that these contentions are at least sufficient for institution.

We do not agree with Patent Owner, on the limited record before us, that our precedential decision in *Xerox* applies to Dr. Foroosh's testimony, at least with respect to limitation 1(c). Contrary to Patent Owner's argument, Dr. Foroosh's testimony directed to limitation 1(c) is supported by citations to Korten. *See* Ex. 1015 ¶¶ 115–116. Dr. Foroosh then formulates opinions as to what a person having ordinary skill in the art would have understood from Korten disclosure.

We understand Petitioner to rely on an inherent disclosure of the certainty score in contending that Korten anticipates claim 1. *See, e.g., ABS*

Glob., Inc. v. Cytonome/St, LLC, 84 F.4th 1034, 1042–43 (Fed. Cir. 2023) ("A claim is anticipated if 'each and every element as set forth in the claim is found, either expressly or *inherently*, in a single prior art reference.'" (emphasis added). And inherency is a high standard. *See, e.g.*, *Cont'l Can Co. USA v. Monsanto Co.*, 948 F.2d 1264, 1269 (Fed. Cir. 1991) ("Inherency, however, may not be established by probabilities or possibilities. The mere fact that a certain thing may result from a given set of circumstances is not sufficient. If, however, the disclosure is sufficient to show that the natural result flowing from the operation as taught would result in the performance of the questioned function, it seems to be well settled that the disclosure should be regarded as sufficient."). We determine, on the limited record before us, that Petitioner has made a sufficient showing for institution that a certainty score would naturally flow from Korten's validity and error determinations.

Accordingly, upon review of the information in the Petition and corresponding evidence, including Patent Owner's counter arguments, we determine Petitioner has sufficiently demonstrated, at this stage of the proceeding, that Korten discloses the subject matter of limitation 1[c].

e. Conclusion, claim 1

We determine that the information in the Petition sufficiently demonstrates for institution that Korten anticipates claim 1.

2. Dependent claim 12

Claim 12 depends from claim 1 and further recites "wherein the method comprises creating a shade profile for the tooth from shade values determined one or more points on the tooth." Ex. 1001, 22:16–18. Petitioner directs us to its analysis for limitation 13[c] for this claim, which recites the identical subject matter. Pet. 27–28, 37–38. Petitioner contends

that Korten discloses determining shade values for one point on a tooth and further discloses determining a shade value at a second location on that tooth. *Id.* at 37 (referencing Ex. 1009, 10:65–11:7; Ex. 1015 ¶ 174). Petitioner explains that determining "different colors for different portions of a tooth may be used when building up the dental restoration such that the dental restoration may be comprised of different color shades." *Id.* (referencing Ex. 1009, 10:65–11:7; Ex. 1015 ¶ 174).

Petitioner contends that Korten discloses that points identified on a patient's tooth correspond to points on a digital three-dimensional representation of the patient's tooth. Pet. 37 (referencing Ex. 1009, 5:30–34; Ex. 1015 ¶ 175).

Patent Owner references its arguments for limitation 13[b] in addressing limitation 13[c]. Prelim. Resp. 27. Patent Owner references its arguments for limitation 1[b] in addressing limitation 13[b]. *See id.* at 8–11, 27. We address these arguments in connection with our analysis of claim 1, above.

Upon review of the information in the Petition and corresponding evidence, and Patent Owner's counter arguments, we determine Petitioner has sufficiently demonstrated, at this stage of the proceeding, that Korten discloses the subject matter of claim 12.

3. Independent claim 14 and dependent claim 15

For claim 14, for limitations 14[a], 14[b], and the preamble, Petitioner cross references its analysis for similar recitations in claim 1. *See* Pet. 28. Patent Owner cross references its arguments for limitation 1[b] in addressing limitation 14[b]. *See* Prelim. Resp. 15–16. We address Petitioner's contentions and Patent Owner's counter arguments for these limitations above, in connection with our analysis of claim 1.

Independent claim 14 recites "where at least one of said sub-scans comprises both texture information and geometry information for said tooth, and generating the digital 3D representation of the tooth from the recorded series of sub-scans." Ex. 1001, 22:47–52 (limitation 14[c]). Petitioner contends that "Korten discloses 'measuring a second color at a second location on the same tooth or a further tooth in the patient's dentition, the second location being different from the first location." Pet. 28 (referencing Ex. 1009, 5:9–11; Ex-1015 ¶ 127). Petitioner explains that, "[a]s part of this process, the first optical sensor may capture 'the shape of that further tooth and based thereon updating the first virtual dentition model by the shape of the further tooth.'" *Id.* at 28–29 (referencing Ex. 1009, 5:14–16; Ex. 1015 ¶ 127). Petitioner adds that Korten discloses that "[t]he measured colors may be mapped relative to the first virtual dentition model at coordinates which correspond to the location at the dentition." *Id.* at 29 (referencing Ex. 1009, 5:24–27; Ex. 1015 ¶ 127).

Petitioner contends that capturing "the first location corresponds to the first subscan" and capturing "shape and color data associated with the second location correspond to the second subscan." Pet. 29. Petitioner contends that, "[b]y incorporating the shape and color data from the second subscan into the location coordinates determined for the first scan, the disclosed system in Korten generates the [three-dimensional] representation [of a tooth] using this series of subscans." *Id.* (referencing Ex. 1015 ¶ 128).

Patent Owner argues that "Korten discloses capturing data from a patient's dentition with the steps of capturing the shape of a tooth and *independently* measuring a color at a location on the tooth using separate sensors." Prelim. Resp. 16 (emphasis added). Patent Owner argues that "Petitioner fails to point to any disclosure in Korten of sub-scans that

contain *both* shape and color data." *Id.* at 18 (emphasis added). Patent Owner appears to argue that limitation 14[c] requires shape and color data to be collected in a single subscan at the same time.

We have reviewed Patent Owner's argument and determine, on the limited record before us, that Patent Owner identifies a weakness in Petitioner's position. We have reviewed Petitioner's citations to Korten (Ex. 1009, 5:9–11, 5:14–16, 5:24–27) and Dr. Foroosh's testimony (which relies on the same citations to Korten). As Patent Owner argues, Korten seems to disclose independently measuring shape and color. *See* Ex. 1009, 5:9–11 ("measuring a second color at a second location on the same tooth or a further tooth in the patient's dentition, the second location being different from the first location"), 5:12–16 ("in case of measuring the second color on the further tooth, capturing via the first optical sensor at least a portion of the shape of that further tooth and based thereon updating the first virtual dentition model by the shape of the further tooth"), 5:24–27 ("The measured colors may be mapped relative to the first virtual dentition model at coordinates which correspond to the location at the dentition."). This disclosure in Korten appears to first measure color data, then capture shape data. *Cf. id.* at 8:29–44 ("The measurement of color, for example the first color, is performed independent from capturing the shape. . . . Such a method preferably provides for precise color measuring . . . .")

As we discuss above, Petitioner has sufficiently demonstrated that the information presented in the Petition anticipates claims 1 and 12, and we institute on all challenges raised in the Petition. *See SAS Inst., Inc. v. Iancu*, 138 S. Ct. 1348, 1354, 1359–60 (2018); *see also PGS Geophysical AS v. Iancu*, 891 F.3d 1354, 1360 (Fed. Cir. 2018) (interpreting the statute to require "a simple yes-or-no institution choice respecting a petition,

embracing all challenges included in the petition"); 37 C.F.R. § 42.108(a) ("When instituting *inter partes* review, the Board will authorize the review to proceed on all of the challenged claims and on all grounds of unpatentability asserted for each claim."). We will evaluate the patentability of claim 14 on a complete record at the end of trial, and the parties may develop the record with respect to claim 14 during trial. Specifically, the parties should develop whether limitation 14[c] requires the at least one subscan to collect shape and color data simultaneously.

Claim 15 depends from claim 14 and includes all of the limitations of claim 14. As such, claim 15 suffers from any weakness in Petitioner's contentions identified for claim 14.

4. Conclusions as to Ground 1

For the reasons discussed above, we determine, on the current record, that the information presented in the Petition sufficiently demonstrates that Korten anticipates at least one of the Challenged Claims under 35 U.S.C. § 102.

E. Grounds 2, 3, and 4

Petitioner challenges claims 1, 2, 4, 5, 9, and 12–16 as unpatentable under 35 U.S.C. § 103 over the combination of Korten and Lehmann II. Pet. 30–44 (Ground 2). Petitioner challenges claims 10, 16, and 17 as unpatentable under 35 U.S.C. § 103 over the combination of Korten, Lehmann II, and Babayoff. *Id.* at 44–50 (Ground 3). Petitioner challenges claims 1, 2, 9, 12, and 14–16 as unpatentable under 35 U.S.C. § 103 over the combination of Korten and Lehmann I. *Id.* at 51–58 (Ground 4).

Among other challenges (which we have addressed in connection with our analysis of claim 1, above), Patent Owner argues that a person having ordinary skill in the art would not have been motivated to combine the

teachings of Korten with either Lehmann I or Lehmann II. Prelim. Resp. 22–26, 29 (referencing arguments for Ground 2), 35–36 (referencing arguments for Ground 2 directed to motivation to combine references). Patent Owner argues that, contrary to Petitioner's assertion, the technology of Korten does not overlap with Lehmann II. *Id.* at 23. Specifically, Patent Owner argues that Petitioner and Dr. Foroosh fail to address how a person having ordinary skill in the art could have successfully combined the two-dimensional imaging of Lehmann II with the three-dimensional imaging of Korten. *See id.*; *see, e.g.*, Pet. 31 ("Lehmann II is directed towards the analysis of [two-dimensional] images, whereas Korten is directed towards rendering and displaying [three-dimensional] models.").

Patent Owner argues that Petitioner should have been aware of this issue given the Board's prior decision denying institution in IPR2023-00400. Prelim. Resp. 23. Patent Owner then itemizes a list of technical challenges with respect to combining a two-dimensional system with a three-dimensional system. *Id.* at 24. These challenges include that Petitioner does not explain "how one might associate a Z-coordinate of Korten with the color data obtained by the Lehmann II camera," how a person having ordinary skill in the art "would have Korten's processor align the [two-dimensional] color image areas obtained by the Lehmann II camera with the [three-dimensional] entity previously created by Korten, and then provide color values to the entity at aligned X-Y-Z points," and "how to implement Lehmann II's [two-dimensional] image into Korten's [three-dimensional] model." *Id.*; *see also id.* at 24–26 (discussing difficulties in using spectrophotometers to collect color data and associating two-dimensional color data with three-dimensional representations).

Petitioner, concentrating on Lehmann II's best fit technology, contends that "[a]lthough Lehmann II is directed towards the analysis of [two-dimensional] images, whereas Korten is directed towards rendering and displaying [three-dimensional] models, this difference is immaterial as it relates to ***determining the certainty score*** of the selected tooth shade value." Pet. 31 (referencing Ex. 1015 ¶ 141); *cf.* Ex. 1015 ¶ 141 (providing the same testimony as is in the Petition).

We have reviewed Patent Owner's argument and determine, on the limited record before us, that Patent Owner identifies a weakness in Petitioner's position. Petitioner's contentions concerning motivation to combine Korten and Lehmann II seem to focus on a motivation for using Lehmann's teachings of the subject matter of limitation 1[c], and does not address Petitioner's reliance on Lehmann II for the subject matter of limitation 1[b], which recites the step of "determining a tooth shade value for at least one point on the tooth based on the texture data of the corresponding point of the digital 3D representation and on known texture values of one or more reference tooth shade values." *See* Pet. 30 (mapping the requirements of limitation 1[b] to disclosures in Lehmann II); Ex. 1001, 21:33–37 (providing limitation 1[b]). Limitation 1[b] seems to require implementing teachings concerning two-dimensional color data from Lehmann II with three-dimensional color data collected at the step of limitation 1[a] by Korten's system.

As such, Petitioner's reasoning may not be adequately supported by a rational underpinning. *Cf. KSR Int'l Co.*, 550 U.S. at 418 (stating that, to facilitate the analysis of an obviousness position, the proponent should provide "some articulated reasoning with some rational underpinning to

support the legal conclusion of obviousness"). The parties may develop the record concerning this dispute at trial.

F. Grounds 5 and 6

Petitioner challenges claim 13 as unpatentable under 35 U.S.C. § 103 over the combination of Korten and Pye. Pet. 58–61. Petitioner challenges claims 10, 16, and 17 as unpatentable under 35 U.S.C. § 103 over the combination of Korten and Babayoff. *Id.* at 61–62. As to the subject matter of claim 13, Petitioner relies on the teachings of Korten, other than for limitation 13[d].[9] For limitation 13[d], Petitioner relies on Pye's teaching of dividing a tooth into regions of interest or major tooth regions for collecting data. *See* Pet. 58–59. Petitioner contends that "incorporating the technique from Pye into Korten results in a system in which tooth shade values are determined from data points located in at least three different regions of the tooth – the incisal region, the central region, and the cervical region." *Id.* at 59.

Petitioner contends that a person having ordinary skill in the art would have been motivated to use Pye's tooth-shade-averaging features for tooth regions in Korten's system, which "allows for sufficiently accurate shade identification without requiring complex and time-consuming analysis." Pet. 60 (referencing Ex. 1012, 4:11–15).

Patent Owner references its arguments directed to Korten and limitation 1[b] in response to Petitioner's contentions with respect to Korten and limitation 13[b]. We have addressed these arguments in connection

---

[9] Limitation 13[d] recites "wherein the tooth shade profile comprises a one or more tooth shade regions on the tooth surface where an average tooth shade is derived for each region from tooth shade values determined for a number of points within the region." Ex. 1001, 22:32–36.

with our analysis of Ground 1, claim 1. Patent Owner references its arguments in response to Petitioner's contentions with respect to motivation to combine Korten's and Lehmann II's teachings for Ground 2 in arguing against Petitioner's contentions with respect to combining Korten's and Pye's teachings for Ground 5.

We have reviewed Patent Owner's arguments and determine, on the limited record before us, that Patent Owner has not identified a weakness in Petitioner's position. Petitioner relies on teachings from Pye that differ from the teachings in Lehmann II upon which Petitioner relies in Ground 2. We do not discern, from the limited record before us, how Patent Owner's arguments with respect to Ground 2 apply to Ground 5.

With respect to Ground 6, Patent Owner does not provide any specific arguments directed to the subject matter of dependent claims 10, 16, and 17. *See* Prelim. Resp. 39 ("Since Claims 1 and 14 would not have been obvious, dependent Claims 10, 16 and 17 would not have been obvious."). We have reviewed Petitioner's contentions with respect to Babayoff's teachings and Petitioner's reasons to combine those teachings with Korten's system and determine, on the current record, that Petitioner demonstrates a reasonable likelihood that dependent claims 10 is obvious over Korten and Babayoff. Claims 16 and 17 depend from claim 14 and suffer any deficiency identified for claim 14.

III. DISCRETIONARY DENIAL

Patent Owner argues that we should exercise discretionary denial of the Petition under § 325(d) or § 314(a). Prelim. Resp. 39–45. We take each of these arguments in turn.

A. § 325(d)

Patent Owner contends that we should exercise our discretion and deny the Petition under 35 U.S.C. § 325(d). Prelim. Resp. 39–43. Patent Owner argues that in this proceeding, like the proceeding in IPR2023-00400, "Petitioner asserts combining 2D images multiple secondary references with the 3D representation of Korten without some rational underpinning to support the legal conclusion of obviousness. Petitioner's failure to address these issues should result in the Board using its discretion to deny institution." *Id.* at 40; *see also id.* at 40–43 (discussing the issues in IPR2023-00400 leading to denying institution and that Petitioner should have been aware of the issues and addressed them in the Petition).

Our precedential decisions in *Advanced Bionics, LLC v. MED-EL Elektromedizinische Geräte GmbH*, IPR2019-01469, Paper 6 (PTAB Feb. 13, 2020) (precedential) ("*Advanced Bionics*"), and *Becton, Dickinson & Co. v. B. Braun Melsungen AG*, IPR2017-01586, Paper 8 (PTAB Dec. 15, 2017) (precedential as to § III.C.5, first paragraph) ("*Becton, Dickinson*"), govern our exercise of discretion to deny a petition under § 325(d). For the reason provided below, we do not exercise our discretion to deny institution under § 325(d).

Section 325(d) provides that, in determining whether to institute an *inter partes* review, "the Director may take into account whether, and reject the petition or request because, the same or substantially the same prior art or arguments previously were presented to the Office." 35 U.S.C. § 325(d). The Board uses a two-part framework in determining whether to exercise its discretion under § 325(d), specifically:

> (1) whether the same or substantially the same art previously was presented to the Office or whether the same or substantially the same arguments previously were presented to the Office; and
>
> (2) if either condition of [the] first part of the framework is satisfied, whether the petitioner has demonstrated that the Office erred in a manner material to the patentability of challenged claims.

Advanced Bionics, Paper 6 at 8.

In applying the two-part framework, we consider several non-exclusive factors from *Becton, Dickinson*, which provide "useful insight into how to apply the framework." *Advanced Bionics*, Paper 6 at 9; *see Becton, Dickinson*, Paper 8 at 17–18 (providing factors).

Patent Owner does not apply our framework in its response. *See* Prelim. Resp. 39–43. Regardless, we determine that the same or substantially the same art or the same or substantially the same arguments previously were not presented to the Office. Specifically, IPR2023-00400 did not include Korten and an anticipation ground. The denial of the petition in IPR2023-00400 focused on the motivation to combine in obviousness-based grounds. *See id.* at 39–40 (recounting the decision in IPR2023-00400). We determine that the presence of Korten and the anticipation ground is sufficient to not implicate the first part of the *Advanced Bionics* framework.

Because we determine that the first part of the framework is not satisfied, we need not undertake the second part of the framework.

Accordingly, we do not deny the Petition under 35 U.S.C. § 325 (d).

B. § 314(a)

Patent Owner argues that Petitioner's *Sotera*-type stipulation is deficient and that would should exercise discretion under 35 U.S.C § 314(a)

to deny the Petition because of the parallel district court proceeding. Prelim Resp. 43–45.

Under § 314(a), we have discretion to deny institution of an *inter partes* review. *Cuozzo Speed Techs., LLC v. Lee*, 136 S. Ct. 2131, 2140 (2016). We consider several factors when determining whether to deny institution under § 314(a) based on a parallel district court proceeding. *Apple Inc. v. Fintiv, Inc.*, IPR2020-00019, Paper 11 at 5–6 (PTAB Mar. 20, 2020) (precedential) ("*Fintiv*"). We also consider "several clarifications" made by the Director of the United States Patent and Trademark Office ("USPTO"). *See* USPTO Memorandum, Interim Procedure for Discretionary Denials in AIA Post-Grant Proceedings with Parallel District Court Litigation, 2 (June 21, 2022), *available at* https://www.uspto.gov/sites/default/files/documents/interim_proc_discretionary_denials_aia_parallel_district_court_litigation_memo_20220621_.pdf ("Director's Memo").

Petitioner states that it

> hereby stipulates that, should the Petition be granted, Petitioner will not pursue in the District Court the same grounds that are raised or could have reasonably been raised in this Petition pursuant to *Sotera Wireless, Inc. v. Masimo Corp.*, IPR2020-01019, Paper 12 (PTAB Dec. 1, 2020) (precedential as to § II.A).

Pet. 63. Patent Owner argues that this stipulation does not provide the "any grounds"/"any other ground" language required in the Director's Memo. Prelim. Resp. 44; *see* Director's Memo 7 ("PTAB will not discretionarily deny institution of an IPR or PGR in view of parallel district court litigation where a petitioner stipulates not to pursue in a parallel district court proceeding the same grounds as in the petition or any grounds that could have reasonably been raised in the petition.").

We have considered Patent Owner's argument and we do not exercise our discretion to deny institution under § 314(a). First, we find that Petitioner clearly intends to be bound by a *Sotera*-type stipulation. *See* Pet. 61. As such, the Board will not exercise discretion to deny a petition because of parallel district court litigation if the petitioner offers a *Sotera*-type stipulation. *See* Director's Memo 7.

Second, and more significantly, Patent Owner does not provide any other information about the parallel district court litigation that we can apply within the *Fintiv* framework. *See Fintiv*, Paper 11 at 5–6 (providing factors the Board considers in determining if discretionary denial of a petition is appropriate in light of a parallel district court proceeding). Because we have no information as to the status of any stay request, the proximity to the trial, data, and the investment in time in the parallel proceeding, for example, we do not deny the Petition under 35 U.S.C. § 314(a).

IV. CONCLUSION

For the foregoing reasons, we determine that Petitioner has demonstrated a reasonable likelihood that it would prevail in showing the unpatentability of at least one of claims 1, 2, 4, 5, 9, 10, and 12–17 of the '151 patent. Also, we do not exercise our discretion to deny the Petition. Accordingly, we grant the Petition and institute an *inter partes* review of the '151 patent.

V. ORDER

It is hereby:

ORDERED that, pursuant to 35 U.S.C. § 314(a), *inter partes* review of claims 1, 2, 4, 5, 9, 10, and 12–17 of the ’151 patent is instituted with respect to all grounds set forth in the Petition; and

FURTHER ORDERED that, pursuant to 35 U.S.C. § 314(c) and 37 C.F.R. § 42.4(b), *inter partes* review of claims 1, 2, 4, 5, 9, 10, and 12–17 of the ’151 patent shall commence on the entry date of this Order, and notice is hereby given of the institution of *inter partes* review.

PETITIONER:

Douglas F. Stewart
Jeffrey E. Danley
Jared D. Schuettenhelm
Patrick Connolly
BRACEWELL, LLP
doug.stewart@bracewell.com
jeff.danley@bracewell.com
jared.schuettenhelm@bracewell.com
patrick.connolly@bracewell.com

FOR PATENT OWNER:

Todd R. Walters
Roger H. Lee
Mythili Markowski
Andrew R. Cheslock
BUCHANAN INGERSOLL & ROONEY PC
todd.walters@bipc.com
roger.lee@bipc.com
mythili.markowski@bipc.com
andrew.cheslock@bipc.com