US 20050237581A1

(19) United States

(12) Patent Application Publication

(10) Pub. No.: US 2005/0237581 A1

(43) Pub. Date: Oct. 27, 2005

Knighton et al.

(54) HAND HELD PORTABLE THREE DIMENSIONAL SCANNER

(76) Inventors: **Mark S. Knighton**, Santa Monica, CA (US); **Peter J. DeLaurentis**, Los Angeles, CA (US); **William D. McKinley**, Manhattan Beach, CA (US); **David S. Agabra**, Pacific Palisades, CA (US)

Correspondence Address:
BLAKELY SOKOLOFF TAYLOR & ZAFMAN
12400 WILSHIRE BOULEVARD
SEVENTH FLOOR
LOS ANGELES, CA 90025-1030 (US)

(21) Appl. No.: 10/830,210

(22) Filed: Apr. 21, 2004

Publication Classification

(51) Int. Cl.[7] H04N 1/024

(52) U.S. Cl. 358/473; 358/483

(57) ABSTRACT

Embodiments of the invention may include a scanning device to scan three dimensional objects. The scanning device may generate a three dimensional model. The scanning device may also generate a texture map for the three dimensional model. Techniques utilized to generate the model or texture map may include tracking scanner position, generating depth maps of the object and generation composite image of the surface of the object.

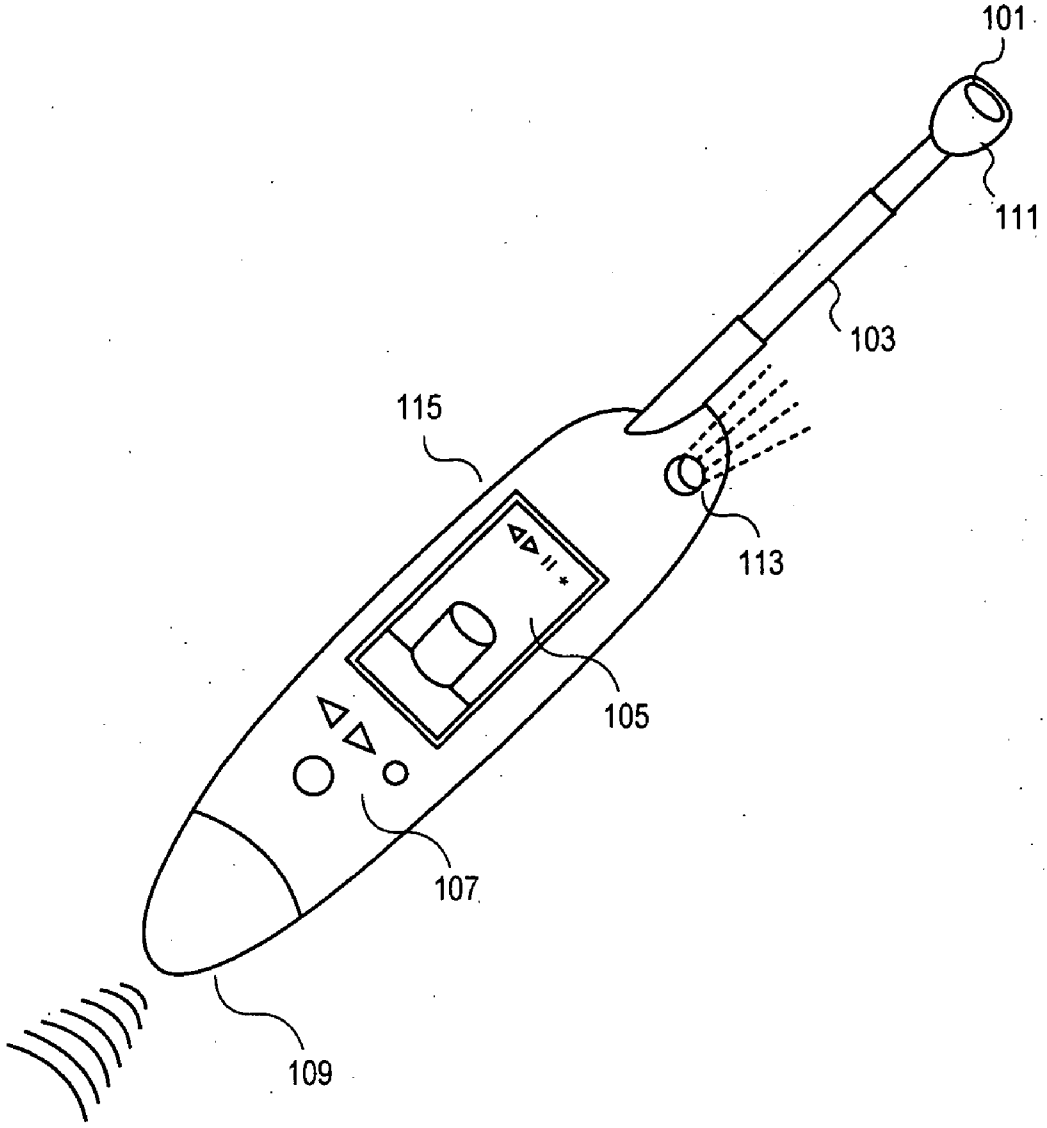

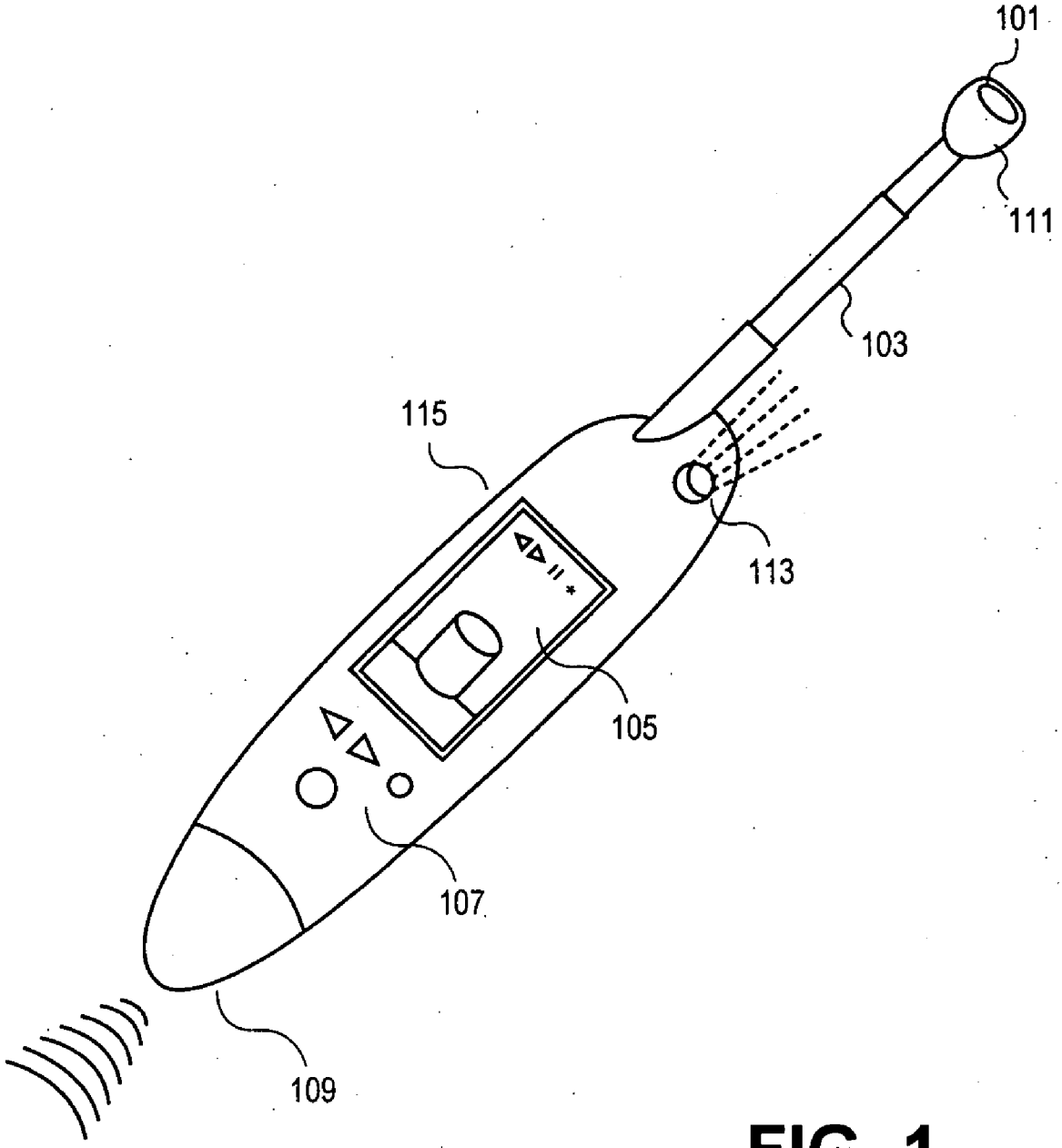

FIG. 1

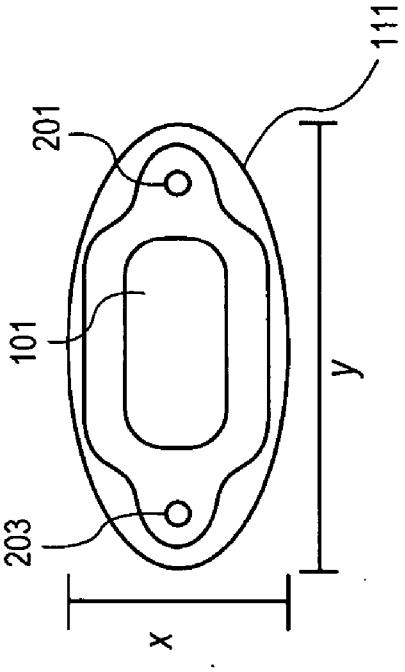

FIG. 2B

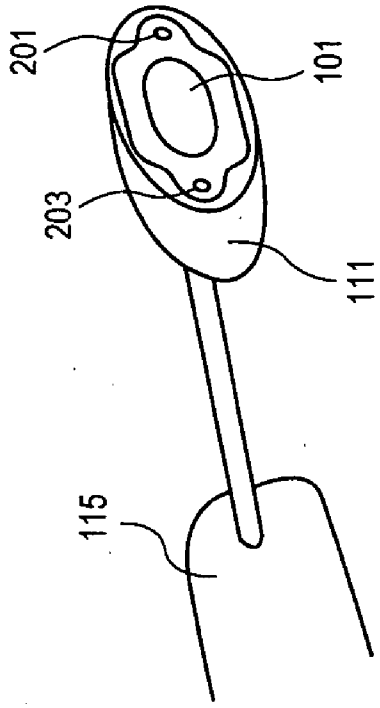

FIG. 2A

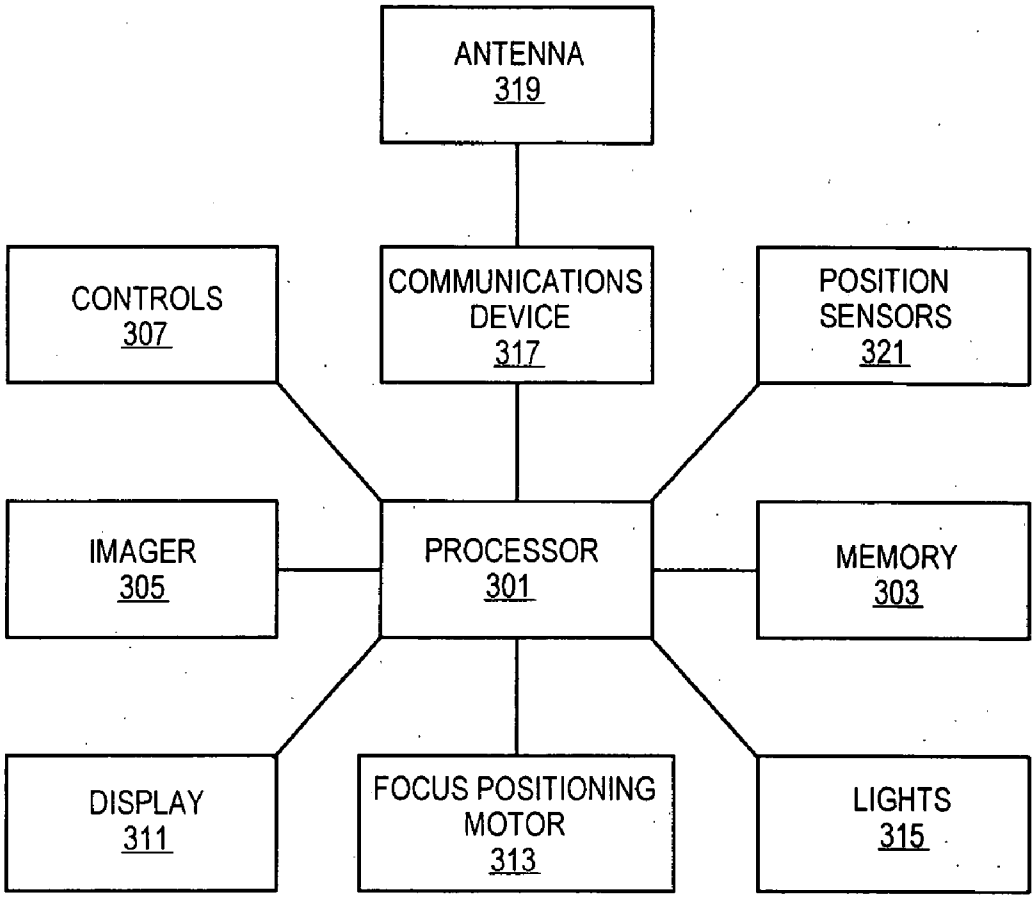
ANTENNA
319
CONTROLS
307
COMMUNICATIONS DEVICE
317
POSITION SENSORS
321
IMAGER
305
PROCESSOR
301
MEMORY
303
DISPLAY
311
FOCUS POSITIONING MOTOR
313
LIGHTS
315

FIG. 3

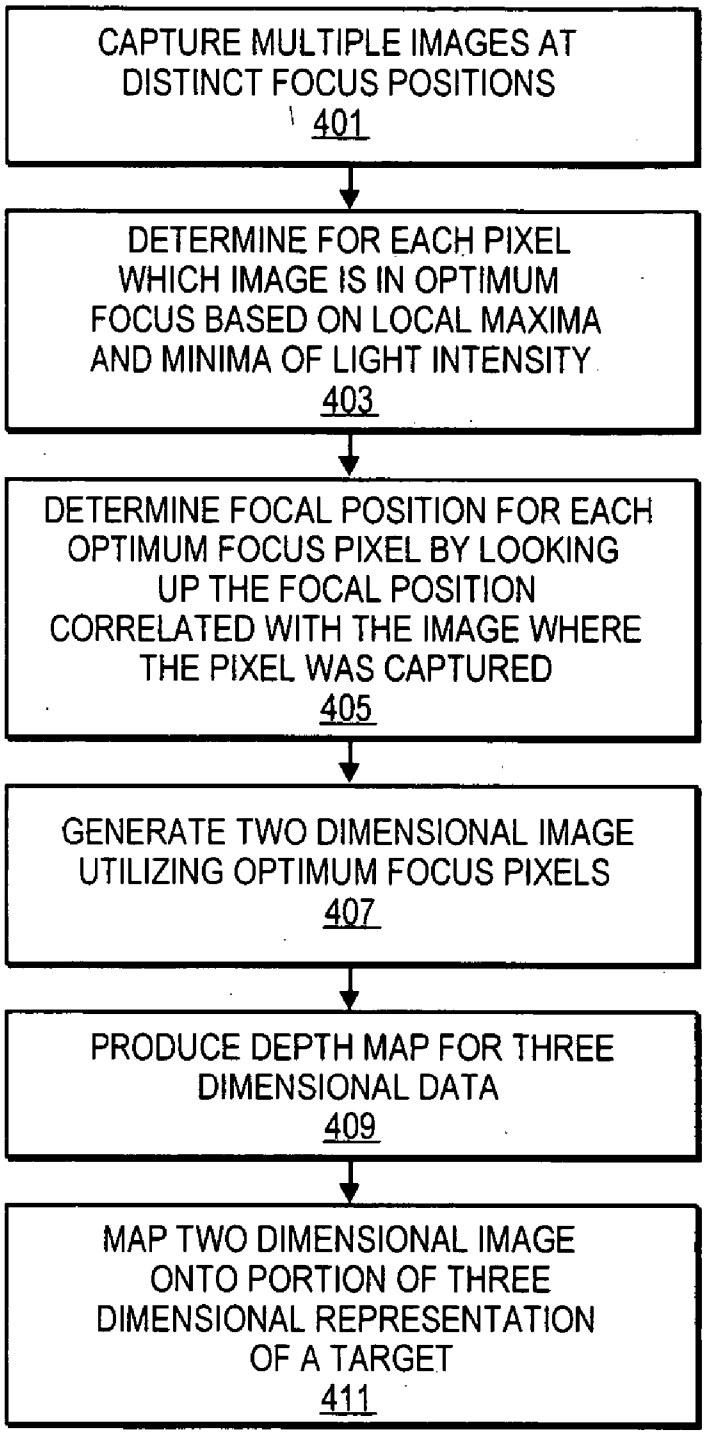
CAPTURE MULTIPLE IMAGES AT DISTINCT FOCUS POSITIONS
401
DETERMINE FOR EACH PIXEL WHICH IMAGE IS IN OPTIMUM FOCUS BASED ON LOCAL MAXIMA AND MINIMA OF LIGHT INTENSITY
403
DETERMINE FOCAL POSITION FOR EACH OPTIMUM FOCUS PIXEL BY LOOKING UP THE FOCAL POSITION CORRELATED WITH THE IMAGE WHERE THE PIXEL WAS CAPTURED
405
GENERATE TWO DIMENSIONAL IMAGE UTILIZING OPTIMUM FOCUS PIXELS
407
PRODUCE DEPTH MAP FOR THREE DIMENSIONAL DATA
409
MAP TWO DIMENSIONAL IMAGE ONTO PORTION OF THREE DIMENSIONAL REPRESENTATION OF A TARGET
411

FIG. 4

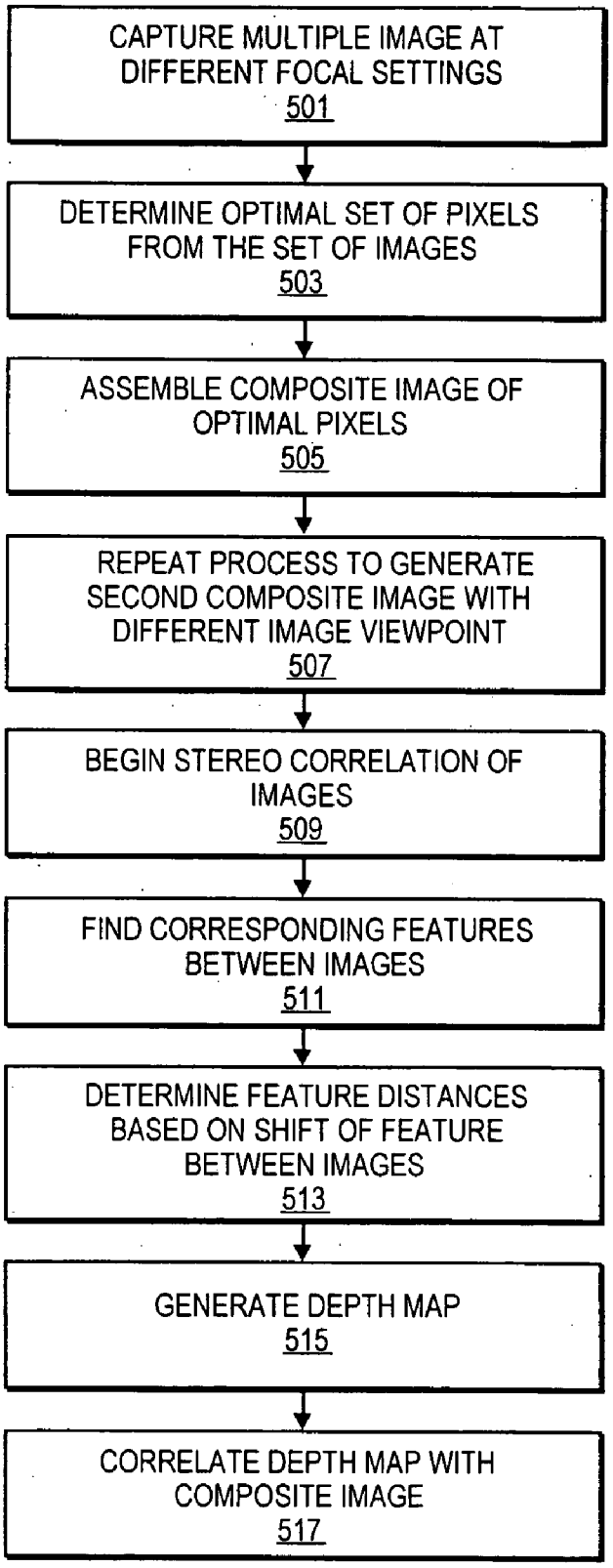
CAPTURE MULTIPLE IMAGE AT DIFFERENT FOCAL SETTINGS
501
DETERMINE OPTIMAL SET OF PIXELS FROM THE SET OF IMAGES
503
ASSEMBLE COMPOSITE IMAGE OF OPTIMAL PIXELS
505
REPEAT PROCESS TO GENERATE SECOND COMPOSITE IMAGE WITH DIFFERENT IMAGE VIEWPOINT
507
BEGIN STEREO CORRELATION OF IMAGES
509
FIND CORRESPONDING FEATURES BETWEEN IMAGES
511
DETERMINE FEATURE DISTANCES BASED ON SHIFT OF FEATURE BETWEEN IMAGES
513
GENERATE DEPTH MAP
515
CORRELATE DEPTH MAP WITH COMPOSITE IMAGE
517

FIG. 5

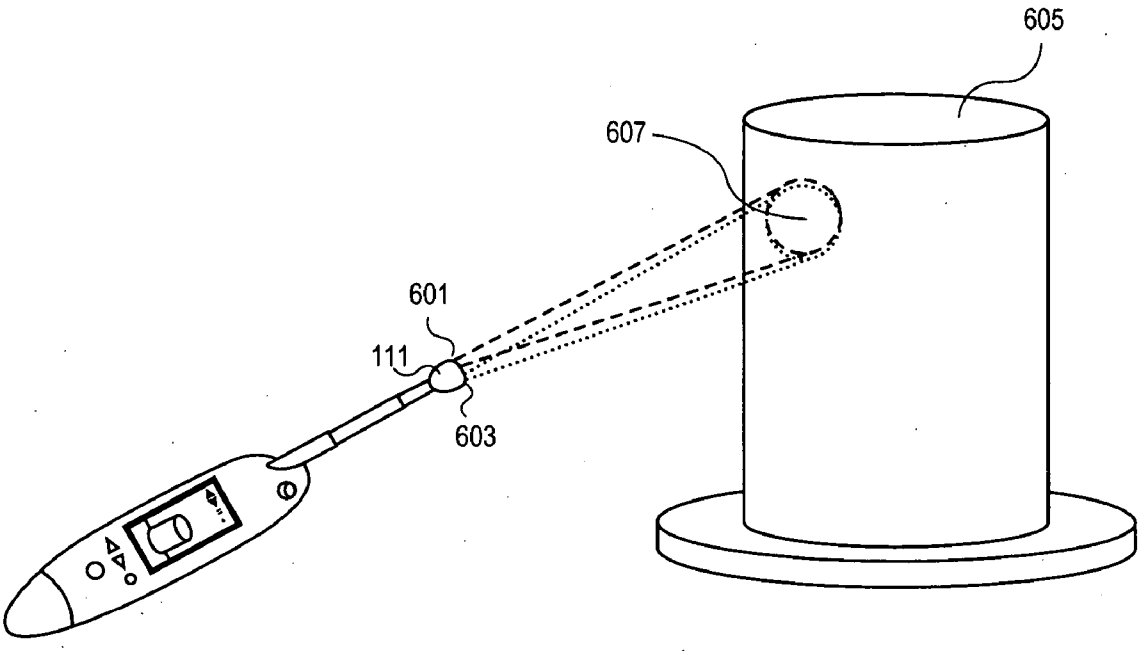

FIG. 6

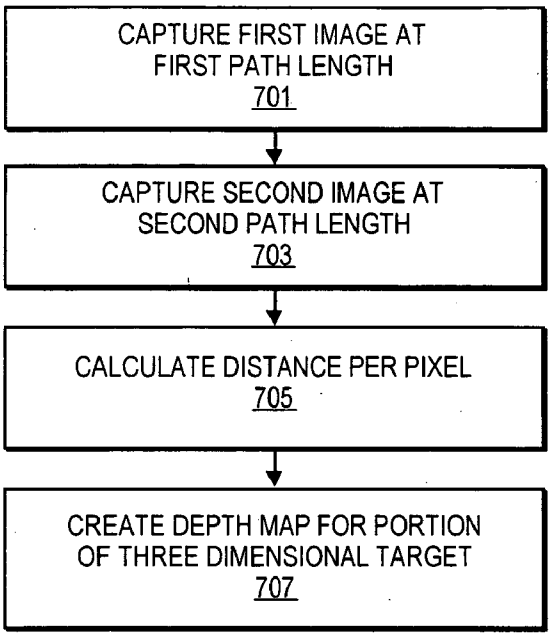
CAPTURE FIRST IMAGE AT FIRST PATH LENGTH
701
CAPTURE SECOND IMAGE AT SECOND PATH LENGTH
703
CALCULATE DISTANCE PER PIXEL
705
CREATE DEPTH MAP FOR PORTION OF THREE DIMENSIONAL TARGET
707

FIG. 7

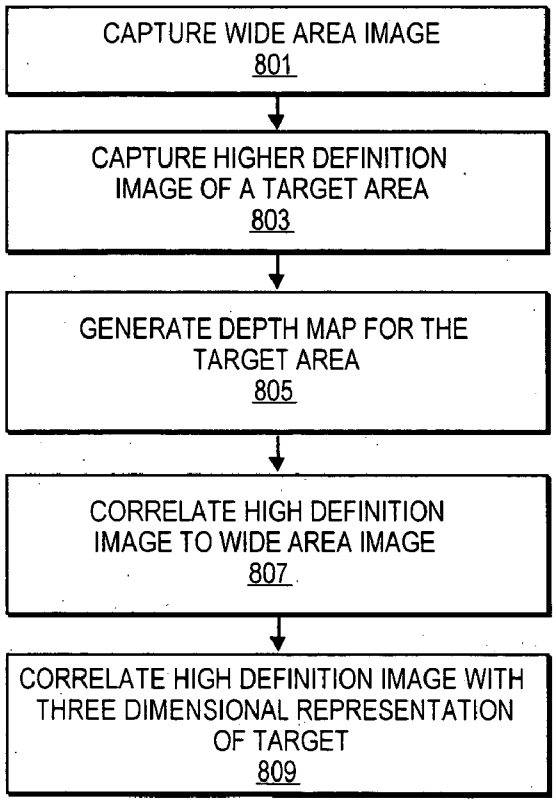
CAPTURE WIDE AREA IMAGE
801
CAPTURE HIGHER DEFINITION IMAGE OF A TARGET AREA
803
GENERATE DEPTH MAP FOR THE TARGET AREA
805
CORRELATE HIGH DEFINITION IMAGE TO WIDE AREA IMAGE
807
CORRELATE HIGH DEFINITION IMAGE WITH THREE DIMENSIONAL REPRESENTATION OF TARGET
809

FIG. 8

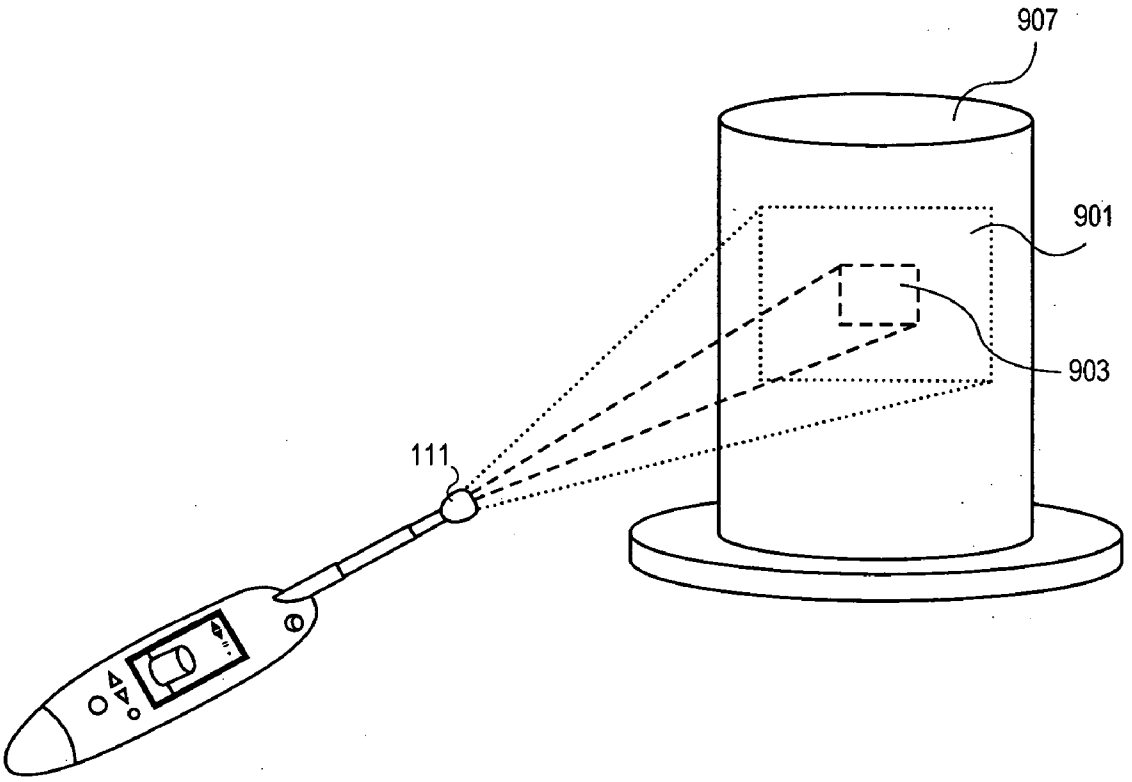

FIG. 9

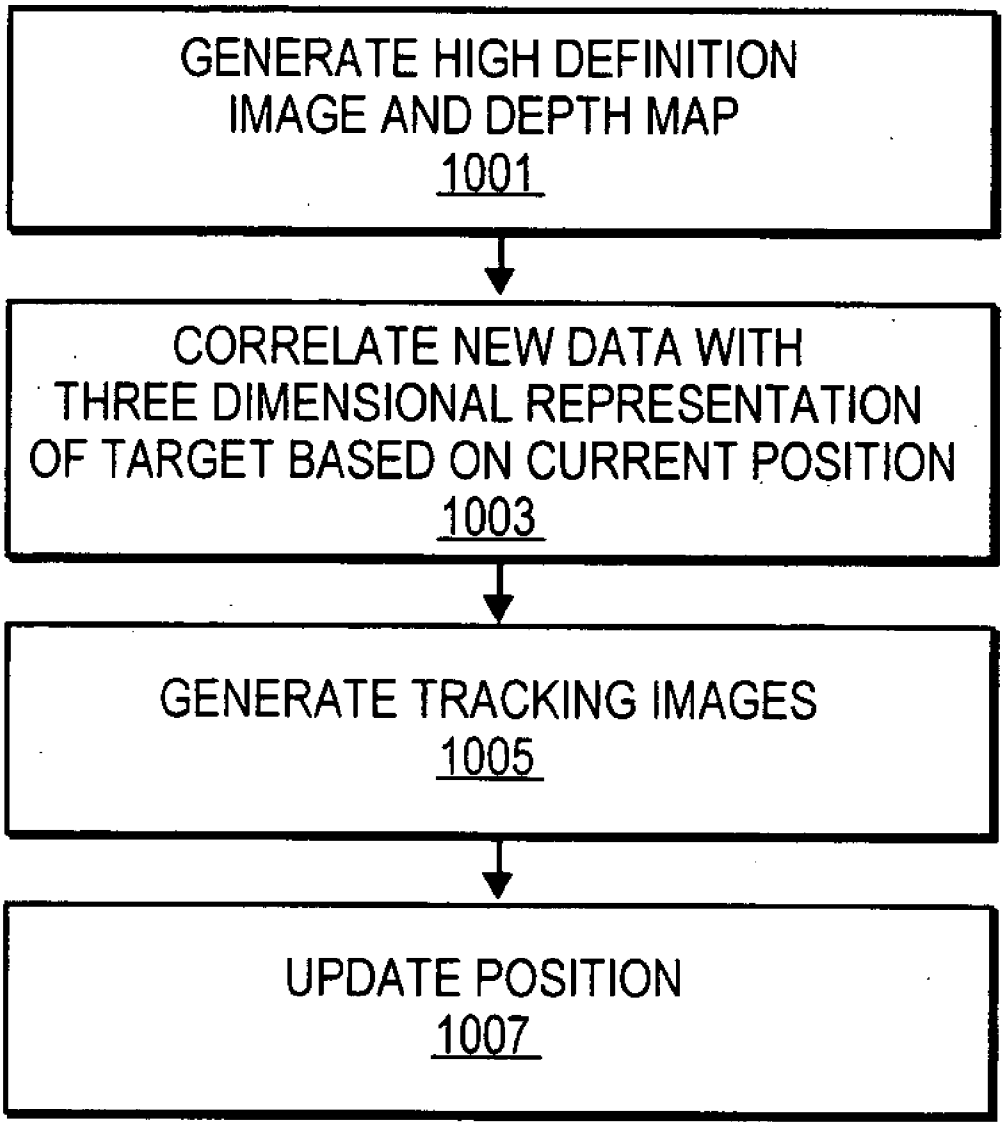
GENERATE HIGH DEFINITION IMAGE AND DEPTH MAP
1001
CORRELATE NEW DATA WITH THREE DIMENSIONAL REPRESENTATION OF TARGET BASED ON CURRENT POSITION
1003
GENERATE TRACKING IMAGES
1005
UPDATE POSITION
1007

FIG. 10

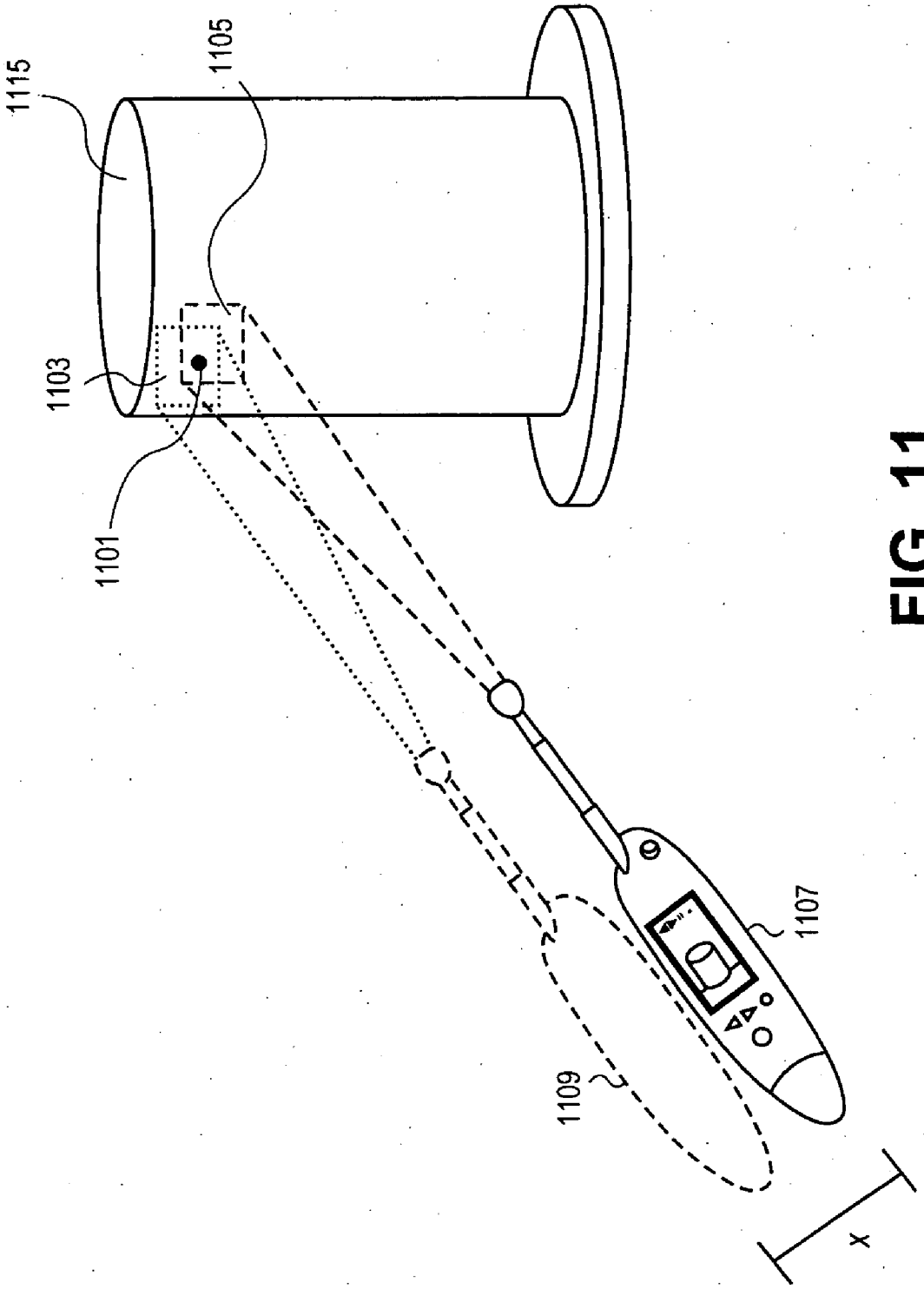

FIG. 11

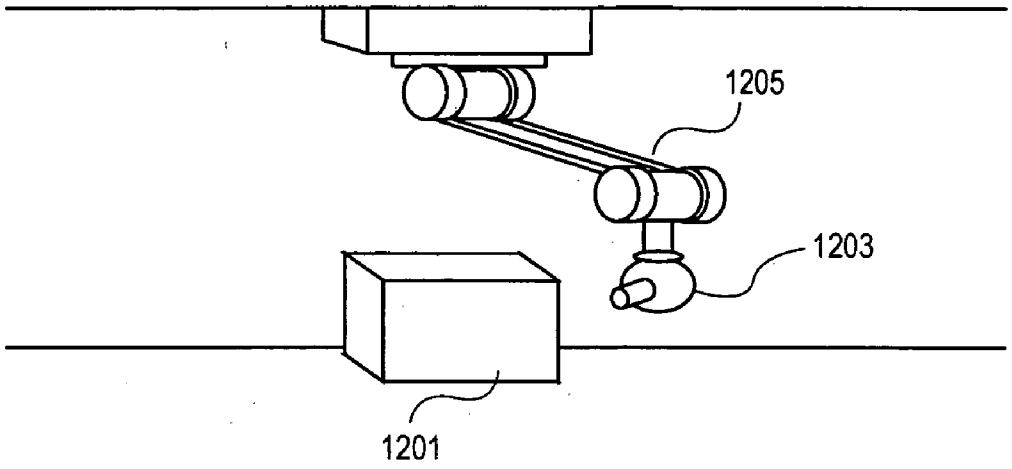

FIG. 12A

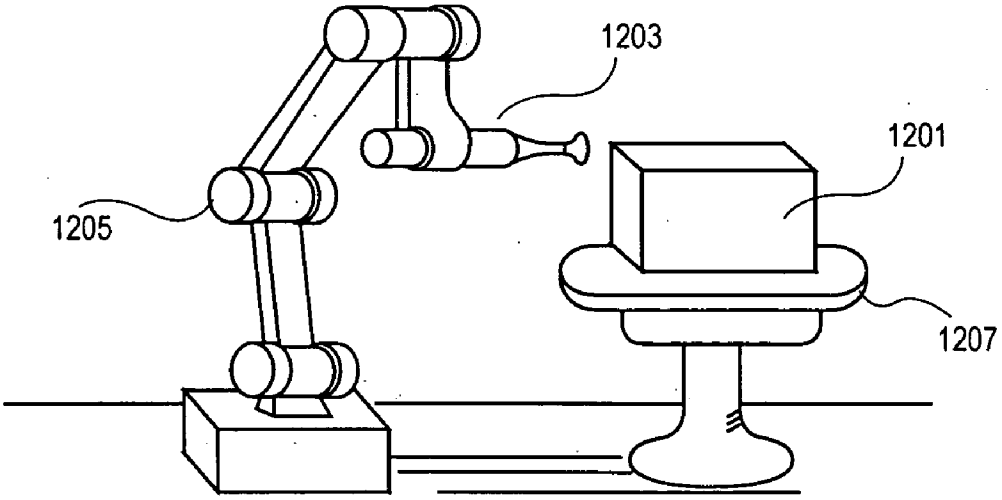

FIG. 12B

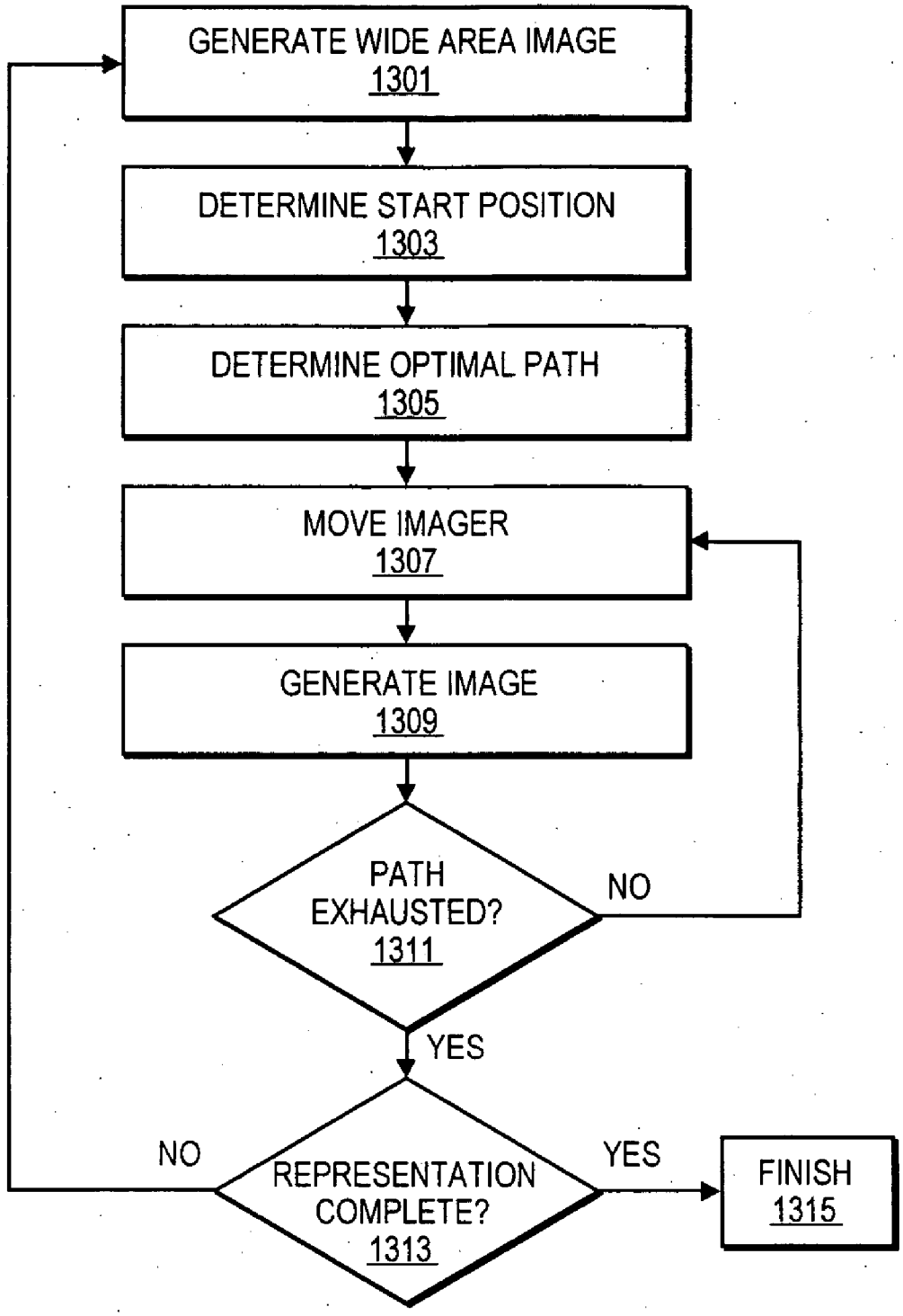
GENERATE WIDE AREA IMAGE
1301
DETERMINE START POSITION
1303
DETERMINE OPTIMAL PATH
1305
MOVE IMAGER
1307
GENERATE IMAGE
1309
PATH EXHAUSTED?
1311
NO
YES
REPRESENTATION COMPLETE?
1313
NO
YES
FINISH
1315

FIG. 13

HAND HELD PORTABLE THREE DIMENSIONAL SCANNER

BACKGROUND

[0001] 1. Field of the Invention

[0002] The embodiments of the invention relate to scanning. Specifically, the embodiments relate to scanning three dimensional objects to generate a three dimensional representation of the objects.

[0003] 2. Background

[0004] Scanning technology utilizes an image sensor to collect light reflected from an object to generate an image of the object. A mirror and lens system is combined with the imaging device to focus the light reflected by the object onto the image sensor. Image sensors convert light energy into an electrical charge and then to a set of bits representing the color and intensity of the light.

[0005] The image sensor may be one of a charge coupled device (CCD) and a complementary metal oxide semiconductor (CMOS). These individual devices are typically arranged into an area array. The number of sensors, each representing a pixel (short for 'picture element'), determine the resolution of the image taken. A pixel is the smallest unit that makes up a digital image. A pixel can represent the shade and color of a portion of an image. The output of a set of image sensors is encoded as a set of pixels to create a digital image.

[0006] The digital image may be stored in a compressed format such as in a jpeg, tiff, or gif format. The image is then stored in a digital storage device and may be displayed on a monitor by a display application. The digital image is a two dimensional image.

[0007] Scanning devices are used in flatbed scanners and copying machines. These devices are large and capable of only scanning relatively flat objects such as paper to create two dimensional images of the object.

BRIEF DESCRIPTION OF THE DRAWINGS

[0008] Embodiments of the invention are illustrated by way of example and not by way of limitation in the figures of the accompanying drawings in which like references indicate similar elements. It should be noted that references to "an" or "one" embodiment in this disclosure are not necessarily to the same embodiment, and such references mean at least one.

[0009] **FIG. 1** is a diagram of one embodiment of a scanning device.

[0010] **FIG. 2A** is a diagram of one embodiment of a lens housing.

[0011] **FIG. 2B** is a diagram of one embodiment of a lens housing.

[0012] **FIG. 3** is a diagram of one embodiment of the components of a scanning device.

[0013] **FIG. 4** is a flowchart of one embodiment of a process for generating a three and two dimensional mapping of an object

[0014] **FIG. 5** is a flowchart of one embodiment of a process for generating a three dimensional model using stereoscopy.

[0015] **FIG. 6** is a diagram of one example embodiment of a scanning device imaging an object using stereoscopy.

[0016] **FIG. 7** is a flowchart for one embodiment of a process for scanning an object by calculating radiant light fall off.

[0017] **FIG. 8** is a flowchart for one embodiment of a process for aligning data in a scanning process.

[0018] **FIG. 9** is one embodiment of a scanning using a wide area image to correlate small area images into a three dimensional representation.

[0019] **FIG. 10** is a flowchart of one embodiment of a process for aligning imaging data to generate a three dimensional model by tracking the position of the scanning device.

[0020] **FIG. 11** is one embodiment of a scanning device tracking its position utilizing image motion tracking.

[0021] **FIG. 12A** is a diagram of one embodiment of a robotic arm system for scanning objects.

[0022] **FIG. 12B** is a diagram of one embodiment of the robotic arm system with a turntable.

[0023] **FIG. 13** is a flowchart of one embodiment of a process for scanning an object utilizing a robotic arm system.

DETAILED DESCRIPTION

[0024] **FIG. 1** is one embodiment of a hand held portable scanning device. The scanning device may be used to generate three dimensional representation of any type of object. As used herein three dimensional representations may be any type of digital modeling, abstraction or similar techniques that may utilize depth maps, polygon meshes, parametric solids, point clouds and similar data structures to create and store three dimensional representation of the scanned object. In one embodiment, the scanner may include a lens **101** or set of lenses. Lens **101** may focus light on one or more image sensing arrays (ISA). In one embodiment, the ISAs may be a charged coupled device (CCD), complementary metal oxide semiconductor (CMOS) sensor, or similar imaging array. Lens **101** may include multiple lenses or focal points to focus light on an imaging device or set of imaging devices. Lens **101** may be moveable to alter the focal point or focus of incoming light. In another embodiment, lens **101** may be replaced by or supplemented by a reflector, light guide or similar article, any of which may be referred to as an "optical element." By varying the focal settings different aspects of the relief of an object may be brought into focus on an ISA. In one embodiment, an optical system having one or more optical elements distributes a same view of a target to a plurality of ISA's, each having a different focal range relative to the target.

[0025] In one embodiment, the scanning device may be a "hand held" device. As used herein, a hand held device may be any device of a small size and weight suitable to be held and used by a human hand. Movement and positioning may be affected by the user without mechanical assistance. This is to be distinguished from a "hand directed" device in which

a capture end is tethered by an arm to a fixed location but movable relative to that location by application of manual force.

[0026] In one embodiment, lens **101** may fill an aperture of housing **111**. Housing **111** may also contain one or more ISAs and actuators for adjusting the focus of lens **101**. Housing **111** may be external to a main housing **115**. Housing **111** may be attached to main housing **115** by a telescoping attachment **103**. In another embodiment, lens housing **111** may be attached to main housing **115** by a bendable or stretchable material or similar structure to allow lens housing **111** to access areas through small apertures and similar obstructions. Telescoping attachment **103** or similar structure may be attached to a set of actuators, sensors or similar structures to allow the manipulation of lens **101** positioning from controls **107** at main housing **115**, a remote controller or similar system. Lens housing **111** positioning may be automated by software local to the scanner or external to the scanner. In one embodiment, lens housing **111** or the scanning device may contain a stabilizer mechanism to maintain an orientation of lens **101** or the ISA by compensating for movement of the scanning device during the capture of an image.

[0027] In one embodiment, small motors, servos, or piezo actuators may be used to move the relative position of the lens, the ISA and other optical elements. For example, this may be accomplished by moving the ISA, the lens, or both. This variance of relative positioning causes a change in the focus of the ISA and constitutes one example of changing the focal settings of the capture device. In one embodiment, lens housing **111** may contain a reflector between lens **101** and the ISA to alter the focal depth from the target object to be scanned to the ISA. In another embodiment, an ISA may be fabricated to allow it to capture different focused images at a plurality of depths within the structure of the ISA. In one embodiment, the focus at different depths within the ISA permits two or more images having different depths of focus to be captured concurrently. Such an ISA may be thought of as having multiple image planes. In one embodiment, each image plane can be read from the ISA individually and independently of the other image plane(s).

[0028] In one embodiment, housing **111** may have a maximum cross dimension (e.g., diameter) of less than two inches to allow access to small spaces and through small apertures. This flexibility permits capture of a wide array of possible targets. "Target" as used herein generally refers to a physical object, portion of an object and/or a collection of objects or portions thereof.

[0029] In one embodiment, main housing **115** may include a visual display **105** to show the current input from the imaging device. In another embodiment, visual display **105** may provide a progress report showing a wide view of all or a portion of a target in one representation and showing a successfully captured portion of the wide view as a different representation. This form of running progress report permits a user to visualize the data collected in the context of the larger target. Moreover, because the display is local to the scanner, and the scanner is close to the target, the user need not look away from both the target and scanning device to get the progress report. The progress report thereby facilitates surface capture of an arbitrary object by guiding the user to areas of the target not yet successfully captured. As used herein "local to" broadly means integrated into or tightly coupled with the noun modified. Conversely, "remote from" means at a distance from the noun modified. For example, both a server across a distributed network and a host PC would be regarded as remote from the unit shown in **FIG. 1** while the display **105** is local to the ISA (not shown) whether disposed within main housing **115** or housing **111**.

[0030] In one embodiment, the scanner may provide other types of feedback to guide the user in capturing a target. For example, the scanner may emit an audible tone either when the capture end is in range or out of range to perform a capture. Alternatively, the scanner may, for example, project a pattern (e.g., two dots) on the surface of the target that converges to a known state (e.g., a single dot) when the scanner is in capture range. In some embodiments, such other forms of feedback may be provided in addition to the visualization mechanism on the display discussed above. Notably, both of these mechanisms permit a user to view the target while receiving the feedback. In one embodiment, feedback may be provided when a portion of a target object has been imaged. Feedback for imaging may include an audible tone, indicator light, tactile feedback or similar feedback.

[0031] Main housing **115** may also include a set of manual input controls **107** to allow a user to provide input to control the scanning device. In one embodiment, the ISA may be disposed within the main housing **115** but still with optical communication to the lens **101**.

[0032] Main housing **115** may also include a light source **113**. Light source **113** may be a light emitting diode or similar device. In another embodiment, the scanning device may provide multiple light sources. In a further embodiment, the light source may be positioned within the housing **111**. In an additional embodiment, the light source may be disposed on the housing **111**. In a further embodiment, light source **113** may be moveable or rotatable to provide light from a different angle or position. Movement and positioning of light source **113** may be servo, motor controlled, or similarly controlled. Movement may be directed by a program or by the user of the scanning device. Other embodiments may not include a light source, relying on ambient lighting to capture images.

[0033] In one embodiment, main housing **115** may include a wireless communication device **109**. Wireless communication device **109** may be a radio frequency (RF) transmitter, cellular device, IEEE 802.11 device or similar transmitter. In one embodiment, the wireless communication device supports the Bluetooth standard, TCP/IP communication and similar communication standards. In another embodiment, the scanning device may include a wire connector for communication with other devices. Wire communication may utilize any wire type communication protocol or technology such as a Universal Serial Bus (USB), firewire, 100 BaseT or similar communication technology.

[0034] **FIG. 2A** is a diagram of one embodiment of a lens housing. In one embodiment, lens housing **111** may have light sources **201**, **203** embedded within or attached to the end of the housing aligned roughly in parallel with the direction of the ISA. Lens housing **111** may have a single light source or multiple light sources **201**, **203**. Light sources attached to lens housing **111** allow a user to insert lens

housing **111** into small apertures and interiors of objects to obtain images of the interior surfaces or surfaces not easily obtainable from an exterior position. The small size of the lens housing **111** also allow the terminus to get closer to a target, whereas large devices require a greater stand off distance to function. Imaging from a position close to the surface of the object permits less expensive optical components to be used. In one embodiment, the terminus of the image capture device requires a stand off distance of less than 6".

[**0035**] Light sources **201**, **203** attached in lens housing **111** provide light for imaging that may not be easily obstructed or occluded by surfaces of the object to be imaged. In contrast, light sources that may be attached to main housing **115** or originate external to the scanning device may be obstructed or occluded by the surface of the target object when the lens housing **111** is imaging an interior space or under similar circumstances. Multiple light sources **201**, **203** instead of a single light source may be used in some embodiments to determine the three dimensional surface of an imaged area of an object. In another embodiment, light sources may be attached in any position to lens housing **111**. Light sources **201**, **203** may be attached to actuators or similar devices to adjust the position and direction of the light.

[**0036**] **FIG. 2B** is a diagram of one embodiment of a lens housing from a front elevational perspective. In one embodiment, the cross dimensions x and y may be small to allow the whole of lens housing **111** to enter small apertures. The small dimensions of lens housing **111** allow the scanning device to image surfaces that are not easily accessible or visible from a position exterior to an object. An object that is within a confined space may also be imaged using a lens housing with small dimensions. The cross dimensions x, y may both be less than two inches in length. Where both of the cross dimensions of lens housing **111** are less than 2" and the light source **201**, **203** are attached to or within the lens housing **111**, all light supplied by the instrument and all light received for three dimensional imaging necessarily pass through a terminus of the instrument with a maximum separation of less than two inches. Two inch maximum cross dimension for the probing end has been found suitable for most capture applications. However, smaller maximum cross dimension such as 1", ½" or smaller are contemplated.

[**0037**] In another embodiment, either dimension x or y may have a cross dimension less than two inches in length. This may allow lens housing **111** to enter most apertures, gaps and similar passages having a two inch or greater clearance. Lens housing **111** may contain light sources **201**, **203**, lens **101**, ISAs and similar components. Lens housing **111** may be attached to an extendible portion of a scanning device having a cross section size smaller than lens housing **111** to facilitate deployment of lens housing **111** into small spaces.

[**0038**] **FIG. 3** is a block diagram of one embodiment of a portable scanner device. The scanner may include a processor **301**. Processor **301** may be a general purpose processor or a specialized processor. In one embodiment, processor **301** may be an application specific integrated circuit (ASIC) or similar type of processor. In another embodiment, processor **301** may be a general purpose processor.

[**0039**] In one embodiment, the scanner includes memory **303** for storing data and software for operating the scanner. Memory **303** may include multiple types of storage. Memory **303** may include SRAM, EPROM, FLASH, DRAM, a hard disk and similar types of memory devices. In one embodiment, memory device **303** may be removable. For example, memory **303** may be a memory stick or similar device. In another embodiment, memory **303** may be a combination of multiple memory devices. For example, memory **303** may be a combination of a hard disk and DRAM.

[**0040**] In one embodiment, memory **303** may store software to operate the scanning device. Software may include drivers for motors, actuators, or similar devices to control the positioning of the lenses, light sources, use of position determining devices and similar applications. Software may also be used to generate a display of incoming data or similar user feedback. In one embodiment, software may be used to communicate data to other devices.

[**0041**] In one embodiment, processor **301** may be in communication with imaging device **305**. Processor **301** may retrieve or receive data from imaging device **305**. Processor **301** may process incoming data from imaging device **305** and utilize memory **303** as a working memory and storage space for incoming images. In one embodiment, processor **301** may store images and data in a standardized, or specialized format such as jpg, tiff, gif, and similar formats. In another embodiment, processor **301** may be assisted in generating a display by a specialized graphics processor.

[**0042**] In one embodiment, processor **301** may execute a set of drivers or similar programs to operate a set of motors **313**, servos, piezo actuators, or similar devices to adjust the position of the lenses and to adjust the focus of the lenses and imager **305**. A software driver and motor may also be present in the device to adjust the telescoping of the lenses or other portions of the device. In one embodiment, imager **305** includes a CCD, CMOS or similar ISA. In one embodiment, imager **305** may include a set of sensing devices organized into an array. In another embodiment, imaging device **305** may include a matrix of image sensors positioned at different depths to receive light at different focal lengths. In such an embodiment, multiple images with different focus may be captured at the varying depths in a single capture phase.

[**0043**] In one embodiment, the device may include a set of lights **315**. Lights **315** may be light emitting diodes, incandescent lights or similar light sources. Processor **301** may alter the state of lights **315** by executing a driver or similar program to adjust power to the lights **315**. Lights may function to illuminate an object to be imaged. In one embodiment, multiple lights may be present with a fixed spatial relationship to one another. In another embodiment, lights **315** may be used to produce a strobe effect or similar lighting effect.

[**0044**] In one embodiment, the system may include position detection devices **321** or position sensing devices. Position tracking or detection sensor **321** may be a single device or combination of devices. The devices may include a gyroscope, global position device, altimeter or similar device that detects the orientation and position of the device in three dimensional space. In one embodiment, a set of gyroscopes and accelerometers may be used for each of an x, y and z axis. The position detection or tracking device

may generate positions or movement output data that indicate the position or movement of the device that may be used by software executing on processor **301** or a remote computing device to generate the three dimensional representation of a target.

[**0045**] In one embodiment, the device may include a communications device **317**. The communication device may transmit data to and receive data from external computing or communication devices. In one embodiment, communications device **317**, may be a wireless communication device or similar device. Communication device **317** may utilize Ethernet, IP, IPX, IEEE 802.11 and similar communication protocols and technologies. In one embodiment, communication device **317** may be directly connected to an external system such as a personal computer, workstation, server or similar system. In another embodiment, wireless communication may utilize Bluetooth, cellular, IEEE 802.11 or similar communication protocols or technology. Communication device **317** may be connected to an antenna **319** or similar device to transmit and receive wireless signals. In one embodiment, the communication device **317** may communicate with a network interface to send data to a remote system on a distributed network such as a local area network (LAN) or the Internet. In another embodiment, communication device **317** may communicate via a wire line using a technology such as a universal serial bus, firewire, 100 BaseT or similar communication medium or protocol.

[**0046**] In one embodiment, the device may include a set of controls **307** or input devices. Controls **307** may be a set of buttons, a touchpad, or similar input devices. Input from control device **307** may be handled by a driver or similar software that is executed by processor **301** to manipulate the settings and actions of the capture device.

[**0047**] **FIG. 4** is a flowchart of one embodiment of a process for generating three and two dimensional mappings of an object. In one embodiment, the mapping process may be initiated by capturing a set of images of the object to be mapped (block **401**). In one embodiment, any number of images greater than one may be taken of the target. Plural images taken at different focal settings of a same portion of the target may be used to derive a full focus composite image and/or depth measurements for that portion of the target as described below. In one embodiment, the images at differing focal settings may be obtained by altering the position of a lens or set of lenses relative to the ISA. Alternatively, the images may be obtained by utilizing multiple lenses or ISAs to capture multiple images of varying focal depths. In one embodiment, the multiple images may be captured simultaneously or in a short period of time. This should minimize or eliminate the effects of motion on the capture device whenever images are captured at different depths. The set of images may include the same area of a target at varying focal settings. In one embodiment, each captured image has a small depth of focus. Depth of focus may be a range in which an image or pixel is in satisfactory visual focus. Thus, only pixels corresponding to points on the target within the range will be in focus in a particular image. The images may be captured with a resolution of finer than 300 pixels per inch so that optimum focus for a surface of a target can be determined even when the surface appears substantially homogenous to an unaided human eye.

[**0048**] In one embodiment, the device may analyze pixels of a set of images captured to determine which of the pixels in a set of corresponding pixels (e.g., corresponding to a same point on or area of a target) is in optimum focus (block **403**). Corresponding pixels may be determined based on the position of the pixel in an imaging array, by the color or encoding of a captured pixel, by correlation of pixels based on positioning sensor data or by similar methods. For example, the device may capture three complete images simultaneously in three separate ISAs, set of lenses or a combination thereof. The imaging devices may have matching array sizes. The pixels at the same position may be compared to determine which pixel is in optimum focus based on determining local minima and maxima of light intensity or brightness. Light intensity may be measured at the level of a pixel. Any encoding may be used and the encoding compared to determine the pixel with most or least light intensity. In one embodiment, the pixel with optimum focus may be found by selecting the most or least light intense pixel. In one embodiment, this selection is made by analysis of neighboring pixels. In another embodiment, the most and least light intense pixel may be processed with a mathematical function, a calibration table, or a similar process or combination of processes to determine which pixel is in optimal focus. In a further embodiment, the most light intense pixel may be selected for optimum focus.

[**0049**] In one embodiment, the processing to discern the local maxima and local minima and the determination of which pixels are in optimum focus may be performed local to the capture device. In another embodiment, all the captured data may be offloaded to a host processor for further processing to discern which pixels are optimally focused.

[**0050**] In one embodiment, the focal position may be determined that corresponds to each optimum focus pixel (block **405**). As used herein an optimum focused pixel may be the pixel having the best focus of the pixels captured corresponding to the same point or area on the target. The focal position may be measured in terms of device positioning detected by positioning sensors, by calculation of focal lengths based on the position of the lenses and imaging device or similar methods. The focal position of each captured pixel may be recorded when each image is captured. When each optimum focus pixel is determined, the focal position of the pixel may be correlated with the pixel by determining the image in which it was captured. The focal settings of each image may be stored when captured and used to determine a focal position for the individual pixel.

[**0051**] In one embodiment, the optimally focused pixels may be compiled into a composite two dimensional image (block **407**). By selecting the optimally focused pixels to assemble into a composite image, the composite image generated has substantially optimum focus. The composite image may be stored in any format. Formats may include jpg, gif, tiff, or similar formats. The composite image may be stored locally in the device or may be transmitted to an external storage device or system. The composite image may be stored and used as the visual representation of the imaged region of the target being scanned. The composite image may be used as a texture map or bitmap to be mapped onto a three dimensional representation of the target being scanned.

[**0052**] In one embodiment, a depth map may be produced from the spatial data associated with the pixels of the

composite image (block **409**). The focal position data associated with each pixel of the composite image may be utilized to determine the distance from the imager to the point/area of the target corresponding to the pixel. The compilation of these distances associated with the composite image may be used to produce as a component depth map. Since only the pixels of the composite image need to be processed to find the depth map, which represents a much smaller data set than the total pixels captured, processing overhead to generate a three dimensional representation is reduced. The composite depth map may be meshed to create a three dimensional model of a surface of the target. This model may ultimately be combined with other three dimensional representations to form a larger representation of the target. In some embodiments, a point cloud is generated as a three dimensional representation of the target rather than the depth map.

[**0053**] In one embodiment, the two dimensional composite image can be mapped onto the three dimensional representation as a texture map or by a similar method (block **411**). The three dimensional representation and texture map may be stored in a combined format or in separate files or formats or similar configurations.

[**0054**] In one embodiment, this process may be repeated to generate multiple three dimensional representation and texture maps. These representations and texture maps may overlap one another. They may be stored as separate files, objects or similar data structures. In one embodiment, newly generated representations and texture maps may be continuously pieced together with prior representations or maps to form a smaller set of representations and maps or a single three dimensional representation and texture map. Stated differently, the discrete patches modeled may be aligned to form more or all of a model of the target being scanned. In one embodiment, forming the composite data sets including the composite image and the composite depth map may be done using a processor local to the imaging device. In another embodiment, this processing may be performed at a host processor remote from the image capture device.

[**0055**] **FIG. 5** is a flowchart of one embodiment of a process for generating a three dimensional representation of a target using stereoscopy. In one embodiment, a device may be activated by a user to initiate a scan of a target or portion of a target. The process may capture an image or set of images at a first focus position (block **501**). The set of images may be captured by a single ISA or a set of ISAs. The multiple images may be obtained by moving the relative positions of lenses and ISAs or by moving one or more reflectors positioned in the optical path between the lenses and the ISAs. In another embodiment, the device may have multiple ISAs at different focal positions. In one embodiment, individual images may be captured with a resolution of greater than 300 pixels per square inch to allow optimum focus to be determined for substantially homogenous surfaces.

[**0056**] In one embodiment, a composite image of optimally focused pixels may be compiled (block **503**). The optimally focused pixels may be determined by detecting local minima and maxima in each set of related pixels (block **505**). Multiple optimally focused pixels representing different points on the target may be compiled into a single composite image (block **505**). This image may be stored in an uncompressed or compressed format such as a jpeg, tiff, gif, bitmap or similar format.

[**0057**] In one embodiment, the process of generating a composite image is repeated with the ISA or ISAs capturing an image of the target at a different angle, position or point of view from the first composite image (block **507**). The second composite image may be generated using the same set of imaging devices by the user moving the imaging devices or by an automated process of moving the imaging devices. For example, a reflector may be adjusted to alter the focal length between the target and the ISAs. In another embodiment, the second composite image may be generated approximately simultaneously with the first composite image by use of a second set of ISAs offset from the first set.

[**0058**] In one embodiment, the first and second composite images may be analyzed to correlate the images (block **509**). The images may be correlated by detecting the same features in both images (block **511**). Common features may be detected by detecting patterns present in both images. These patterns may be patterns of encoded pixels, groups of pixels or approximations thereof. Any algorithm for common feature detection may be utilized. In various embodiments, the correlation may occur local to the image capture device, while in other embodiments, the correlation may occur remote to the image capture device. In another embodiment, the process may be employed with multiple images. The above description discusses the use of two images as an example.

[**0059**] In one embodiment, after the common features between two composite images have been determined, the distance from the imager to the features may be determined (block **513**). The distance to each feature may be calculated by measuring the shift of the feature between the two composite images. Each of the distances to the identified features in the composite images may be stored and compiled to generate a depth map of the imaged region of the imaged target (block **515**). In one embodiment, any of the images utilized to generate the depth map for the imaged region may be correlated to the depth map and used as a texture map of the region (block **417**). The texture map and depth map may be accumulated with other texture maps and depth maps to generate a three dimensional representation of a target and a texture map for the three dimensional representation.

[**0060**] **FIG. 6** is a diagram of a scanning device imaging a target using stereoscopy. In one embodiment, the scanning device may have multiple ISAs contained in lens housing **111**. In another embodiment, the scanning device may have a moveable or adjustable lens focusing system. For example, lens housing **111** may contain a 'left' ISA **601** and a 'right' ISA **603**. Multiple ISAs may have any relative position to one another. The multiple ISAs or adjustable focus ISA may image an area of an object **605** from two positions offset from one another and at a different angle from imaged area **607**. For example, left side ISA **601** and right side ISA **603** may image region **607** of target **605**. ISA **601** and **603** may have a known distance from each other and a known relative angle with respect to a target at varying distances. These images may be compared to determine the distance to each pixel associated with imaged region **607** by aligning pixels from each image and determining the change between

images for identical features. These distances may be used to generate a three dimensional representation of region **607**.

[**0061**] **FIG. 7** is a flowchart of an embodiment of a process for scanning a target by calculating the radiant fall off of a light source on a target. In one embodiment, a first image of a target or portion of a target is obtained by an imaging device (block **701**). The first image may be captured using a first optical path length or distance from the target. "Optical path length" as used herein refers to the distance illumination travels from an emitter to the target and back to a detector. In one embodiment, the emitter may be a LED and the detector an ISA. A second image of the same target or region of the target may be captured subsequently or simultaneously (block **703**) at a different optical path length. In one embodiment, multiple ISAs and/or lenses may be used to capture images having different optical path lengths. In another embodiment, the position of the imager, lens, or scanning device may be altered to obtain the second image at a different path length. In a further embodiment, a light source angle or distance may be varied and an image with a known light source distance change from the first image used. An illumination source may be pulsed at high frequency to distinguish it from ambient light.

[**0062**] In one embodiment, the first image is compared with the second image on a pixel by pixel basis. Pixels capturing light from the same surface areas are correlated. The pixels may be correlated by matching features, tracking device position or by similar methods. A calculation may be made to determine the radiant fall off or differences in brightness or luminescence between the correlated pixels. In one embodiment, the difference in path length is known because it is a function of the components within the capture device. Based on the known relation the distance to the corresponding points on the target can be calculated (block **705**).

[**0063**] In one embodiment, the distance may be calculated by evaluating the radiant falloff of light over distance. For example, if

[**0064**] L=light measured by the ISA,

[**0065**] d=the total path length from the source to a Lambertian surface to the ISA

[**0066**] c is a known constant encompassing the brightness of the source, the color of the surface, etc.

[**0067**] then

$$L = \frac{c}{d^2}$$

[**0068**] If consecutive images are captured where the path length may be changed by a known amount (Δd) between the captures, then:

$$L_1 = \frac{c}{d^2}$$

$$L_2 = \frac{c}{(d + \Delta d)^2}$$

[**0069**] The ratio of the measured light intensities:

$$\frac{L_1}{L_2} = \frac{(d + \Delta d)^2}{d^2}$$

[**0070**] This equation may be reduced to solve for distance d:

$$d = \Delta d\left(\frac{-1 \pm \sqrt{1 - (L_2 - L_1)}}{L_2 - L_1}\right)$$

[**0071**] Either the positive or negative root may be valid depending on whether the path length change (Δd) is negative or positive respectively.

[**0072**] In another embodiment, calculations may be eliminated by building a lookup table of distance vs. intensity ratio at calibration time. This considerably decreases the required processing time, and compensates for non-idealities of the system.

[**0073**] In one embodiment, the distances to each surface point corresponding to each pixel may be used to generate a depth map of the surface of the target or region of the target (block **707**). This depth map may be matched with a texture map based on an image of the surface of the target. The texture map and depth maps may be accumulated to generate a three dimensional representation of a target, which may include a texture map of the surface texture of the target.

[**0074**] **FIG. 8** is a flowchart of one embodiment of a process for aligning data in a scanning process. In one embodiment, a scanning device may capture a wide area image of a target object that is being scanned (block **801**). This wide area image may be utilized to coordinate the piecing together of higher quality images and models of portions of a target being scanned. A higher definition or quality image may be captured of a smaller area of a target (block **803**). A depth map may be generated of the smaller area of the target using any of the methods described in the various embodiments (block **805**). The depth map may be generated and correlated to a texture map for the small area imaged at the higher definition.

[**0075**] In one embodiment, the small area image may be matched to a region of the wide area image (block **807**). The small area image may be matched to a portion of the wide area image by feature or pattern matching or similar methods. The related depth map and texture map derived from the small area image may thereby be related to other small area image depth maps and texture maps (block **809**). Depth maps and texture maps with adjoining or overlapping surface areas may be combined in a three dimensional representation or a portion of a three dimensional representation. In another embodiment, depth maps and texture maps from non-contiguous areas of a scanned target may be compiled into a single representation or texture map with gaps or space for regions not yet scanned or generated.

[**0076**] In another embodiment, the wide area image may be taken at any level of definition. Smaller area images may be taken at any level of definition relative to the wide area

image consistent with this alignment process. For efficient processing and memory or storage usage, a low definition wide area image may be used. In a further embodiment, a single high definition wide area image may be taken and subdivided into smaller images for efficient processing in multiprocessor environments or under similar conditions.

[**0077**] This process may continue by taking additional wide area images to coordinate the assembly of depth maps and texture maps. This process may continue until the entire three dimensional representation of the target is generated or the scan is halted by a user or automatically such as under software control.

[**0078**] **FIG. 9** is a diagram of one example embodiment of a wide area image used to determine the position of a small area image in relation to the whole of the target being scanned. In one embodiment, the scanning device may utilize a wide area image to determine the relative position of smaller area images that may be processed to generate a three dimensional representation of a portion of a target. In one embodiment, the scanning device may have an ISA or multiple ISAs that are capable of capturing a wide area image and a small area image. In another embodiment, an ISA may have a higher sensor density in a central region of the ISA to capture a higher definition small area image in the middle portion of a wide area image. For example, lens housing **111** may contain an ISA with a dense central collection of sensors. The ISA may be capable of capturing a wide area image **901** of target **907**. The ISA may also be capable of capturing a higher definition small area image **903** of target **907**. Small area image **903** may be used to generate a three dimensional representation of the small area **903** of target **907**. Wide area image **901** may be used to align the three dimensional representation of small area **903** with other small area representations of target **907** by correlating other small area representations with the features in wide area image **901**. In another embodiment, a nonlinear lens or similar light focusing mechanism may be used with an ISA to focus a smaller area of the target onto a larger area of the ISA. This system may be used to capture a large area image of a target area including a higher definition section for a portion of the target area.

[**0079**] **FIG. 10** is a flowchart of one embodiment of a process for aligning imaging data to generate a three dimensional representation by tracking the position of the scanning device. In one embodiment, the scanning device captures an initial high definition image and generates a depth map from the image using any technique to extrapolate the depth map from the high definition image, a set of high definition images, a composite image or similar data (block **1001**). The depth map may also be matched with a texture map that may be based on the high definition image. In another embodiment, any level of definition may be used in generating the depth map and texture map dependent on the level of quality in detail of the model of the object desired by the user.

[**0080**] In one embodiment, the depth map may be correlated to a three dimensional representation based on a known position, relative position or similar positional information (block **1003**). The depth map may be the first data added to the representation and may serve as a base reference point for subsequent data added to the representation. The positional data may be correlated with the depth map based on position tracking devices in the scanner or in communication with the scanner or the computing device compiling the three dimensional model. A texture map may also be accumulated by piecing together the texture maps associated with each depth map to form a single texture map for the three dimensional representation. In another embodiment, multiple texture maps are associated with the three dimensional representation.

[**0081**] In one embodiment, the scanning device or imaging devices may be moved subsequent to the capturing of the image. The calculation of the depth map, texture map and three dimensional representation may be accomplished subsequent to or during a scan of the target. Positional data may be maintained by capturing a set of images to track the movement of the scanner relative to its previous position (block **1005**). The movement may be calculated by comparing the intermediary images to match features to determine direction and speed of movement. The images used to track movement may be low definition or low quality images. In one embodiment, these images may be deleted or discarded after the determination of the position or movement rate of the scanning device. In another embodiment, the images may be retained for use in developing the three dimensional model and texture map.

[**0082**] In one embodiment, the tracking information may be used to update the position of the scanning device (block **1007**). The position may be used by the various embodiments of three dimensional representation and texture map generation. This position tracking process may be a continually repeating program or procedure to maintain current position information at all times.

[**0083**] **FIG. 11** is a diagram of one example embodiment of a motion tracking system for a scanning device. In one embodiment, the scanning device may capture images of the surface of a target at a high frequency to determine changes in position of the scanning device. The high frequency capture of images may utilize a low resolution or low quality image capture, while image capture for use in generating three dimensional representations or texture maps may utilize a higher definition image capture. The scanning device may have a single ISA or multiple ISAs to capture the high frequency images for motion tracking.

[**0084**] In one embodiment, motion tracking is based on the detection of features of a target being imaged by the scanning device. For example, target **1115** may have a black dot **1101** on its surface that may be tracked as a feature of target **1115**. The scanning device starting in position **1109** may capture an image of area **1103** containing feature **1101**. The scanning device may be moved to a new position **1107**. The scanning device captures another image **1105** that contains feature **1101**. The distance x that the scanning device has been moved and the position of the scanning device in three dimensional space may be determined by analyzing the movement of common features between motion capture images **1103** and **1105**. The movement of feature **1101** between image **1103** and **1105** may be measured and used to calculate the distance x moved by scanning device as well as any other movement of the scanning device in three dimensional space. In addition, the change of positions between images of features may be combined with image capture frequency rate to determine the speed and acceleration of the scanning device. This information may be utilized to maintain current position information for the

scanning device for use in generating depth maps and similar three dimensional representations of a target.

[0085] In one embodiment, images may be captured at a resolution greater than or equal to 300 pixels per inch as measured at the target surface. This resolution level may assist in capturing features that may be used for position calculations. In one embodiment, features may be captured that are not visible to the unaided human eye.

[0086] **FIG. 12A** is a diagram of one embodiment of a robotic arm system for scanning objects. In one embodiment, capture device **1203** may be attached to a robotic arm **1205** or similar powered positioning systems. Capture device **1203** may have been packaged in various functional form factors to accommodate robotic arm **1205** coupling sizes and intended target **1201** sizes. In one embodiment, capture device **1203** is able to capture three dimensional range data about a target. Robotic arm **1205** may include a set of joints, pivot points, actuators, motors, servos, and similar components to allow robotic arm **1205** to rotate around object **1201** and position scanning device **1203** at any angle needed to scan all surfaces of object **1201**. In one embodiment, scanning device **1203** may include a telescoping head to allow the scanning device to capture images of interior spaces in object **1201**.

[0087] In one embodiment, robotic arm **1205** and scanning device **1203** may be in communication with an external computing device to receive positioning and imaging commands to guide the scanning of object **1201**. The external computing device may collect data gathered by scanning device **1203** and robotic arm **1205** to generate the three dimensional representation and texture map. Robotic arm **1205** may be guided by user input or by an application, driver or similar program.

[0088] **FIG. 12B** is a diagram of another embodiment of the robotic arm system. In one embodiment, robotic arm **1205** and scanning device **1203** may have a limited range of movement relative to target **1201** to be scanned. A turntable **1207** may be utilized to facilitate the scanning of target **1201**. Turntable **1207** may be composed of a flat surface, motors, actuators, servos, and similar components. Turntable **1207** may be in communication with robotic arm **1205** or a computing device to receive commands to guide the movement of turntable **1207**. In one embodiment, a computing device generates signals and similar commands to guide the movement and actions of robotic arm **1205**, scanning device **1203** and turntable **1207** to scan object **1201** and generate a three dimensional representation and texture map of object **1201**. Turntable **1207** may be used to rotate object **1201** past scanning device **1203**. Scanning device **1203** may alter its height or angle as target **1201** rotates to get a complete scan of the exterior of the target. Interior surfaces may be scanned by rotating an exterior opening of target **1201** into a position that allows scanning device **1203** and any telescoping or extensible aspects of the device to be extended into the interior of target **1201**. Turntable **1207** may be used in combination with other powered positioning systems in accordance with the concept described in relation to the robotic arm system.

[0089] **FIG. 13** is a flowchart of an embodiment of a process for scanning an object utilizing a robotic arm system. The process may be implemented as a program to be executed by a computer in communication with the robotic arm system or by a controller coupled to the robotic arm system. In one embodiment, after an object has been put in place for scanning the robotic arm may be moved to an initial position with the scanning device positioned to capture an image of the object. The scanning device may be utilized to generate a wide area image of the target (block **1301**). The wide area image may be analyzed to determine a general outline, size, shape and similar properties of the object. An initial starting point may be determined based on the basic shape or similar properties of the target (block **1303**). An optimal path may also be generated to plot a course of movement for the arm to facilitate the scanning of the target (block **1305**).

[0090] An optimal path may be a path that allows the robotic arm and scanning device to make the fewest movements, travel the shortest distance or capture the fewest images to complete the scan. Any path finding algorithm may be utilized. An optimal path including a starting position may be a set of locations for capturing images of the target. The optimal path may also include the operation of a turntable that rotates the target in front of the scanning device. For example, some targets may be imaged by moving the scanning device up or down while the target is rotated.

[0091] In one embodiment, after a path and starting point have been determined the robotic arm may be instructed to move to the first position in the path or to the starting point (block **1307**). Once in position the scanning device may be activated to capture an image of the target or set of images of the target (block **1309**). In one embodiment, the image may be a set of high definition images used to generate a depth map and a portion of the three dimensional target and texture map. Any technique may be used to transform the set of images into three dimensional representation and texture map data. At each position a set of image texture maps and a three dimensional representation may be generated. The representation and texture maps may be assembled into a three dimensional representation and texture map of the whole target using the known positions and angle of the robotic arm of the time the image was captured. In one embodiment, an alignment process or calibration process may be used to correct for any errors in the known position of the robotic arm.

[0092] In one embodiment, the program may then check the path data to determine if further points in the path remain (block **1311**). If the path has not been exhausted then the robotic arm may be instructed to move to the next position (block **1307**) and the next set of images captured (block **1309**). If the path has been exhausted, then a check may be made to determine if the scanning of the target and generation of the three dimensional representation has been completed (block **1313**). A three dimensional representation may be completed based on user feedback, an exhaustion of scanning all exterior angles, an analysis of the shape of the target or similar methods. If the scan of the target has not completed, then the process may be restarted by taking another wide area image (block **1301**) and a determination of a path for capturing additional elements of the target that were not captured in a previous path (block **1303**). In another embodiment, the next path may be determined from an earlier wide area image or other data or user input. If a turntable is used in the system, then the turntable may be rotated such that a wide area image may be captured from an

angle that had not been previously captured. If the three dimensional model has been completed and a complementary texture map or set of texture maps generated then the process may finish (block **1315**).

[**0093**] In one embodiment, three dimensional representations and texture maps produced according to any of the embodiments may be created externally from the scanning device, internally to the scanning device or partially externally and internally. The scanning device may store raw data, intermediate data, or processed data. The unprocessed data may be processed into a three dimensional representation and texture map at a time convenient to a user.

[**0094**] The use of the embodiments allow for high definition representation of targets to be created that capture small defects and microdefects in the target. The scanning device may be used in close proximity to the target to obtain high quality images of the surface of the target that may be pieced together to form a whole model. The size of the scanning device and the extensions of the scanning device allow the scanning device to be used in close proximity to targets of all shapes and allow the scanning device to capture images of interior and hard to reach spaces of a target that may not be visible from the exterior of the target. These characteristics of the scanning device improve the quality of the three dimensional representations and texture maps that it may produce.

[**0095**] In the foregoing specification, the invention has been described with reference to specific embodiments thereof. It will, however, be evident that various modifications and changes can be made thereto without departing from the broader spirit and scope of the invention as set forth in the appended claims. The specification and drawings are, accordingly, to be regarded in an illustrative rather than a restrictive sense.

What is claimed is:

1. A method comprising:

capturing multiple images of a target in an image sensing array (ISA) at different focal settings;

analyzing over a plurality of the images an intensity of light at a pixel corresponding to a point on the target; and

identifying one of a local maxima or minima of the intensity of light for the pixel to determine which image contains a substantially optimum focus for the pixel.

2. The method of claim 1 further comprising:

determining a distance to a point on the target by analyzing the optimum focus for the pixel.

3. The method of claim 1 wherein identifying is performed local to the ISA.

4. The method of claim 2 wherein determining is performed local to the ISA.

5. The method of claim 1 further comprising:

identifying a substantially optimum focus image for a plurality of pixels and assembling them into a composite image of substantially optimum focus.

6. The method of claim 1 further comprising:

determining a distance to a corresponding point on the target for each of a plurality of pixels by analyzing the optimum focus for each pixel of the plurality and assembling the distances into a composite depth map.

7. The method of claim 5 further comprising:

determining a distance to a corresponding point on the target for each of a plurality of pixels by analyzing the optimum focus for each pixel of the plurality and assembling the distances into a composite depth map; and

assembling the composite image data with the composite depth map to form a composite data set containing both texture and depth data.

8. The method of claim 7 wherein forming the composite data set is performed local to an image capture device.

9. The method of claim 5 further comprising:

incorporating the composite image into a three dimensional representation of the target.

10. The method of claim 6 further comprising creating a three dimensional representation of the target using the composite depth map.

11. The method of claim 5 further comprising:

performing stereo correlation on the composite image and a second composite image to assemble a composite depth map.

12. The method of claim 1 wherein capturing at different focal settings comprises:

moving at least one of an image sensing array (ISA) and a lens with a piezo actuator.

13. The method of claim 1 wherein capturing at different focal settings comprises:

selecting at least one of a plurality of distinct image sensing arrays (ISAs) and lenses at different focal distances.

14. The method of claim 1 wherein capturing at different focal settings comprises:

using an ISA capable of concurrently focusing at different depths within its structure.

15. The method of claim 1 wherein the optimum focus can be determined for a target surface that appears substantially homogeneous unless captured at finer than 300 pixels per inch resolution as measured at the target surface.

16. The method of claim 1 wherein the optimum focus can be determined for a target surface that appears substantially homogeneous to an unaided human eye.

17. An apparatus comprising an imaging device capable of concurrently capturing multiple images of a same target at discrete focal ranges.

18. The apparatus of claim 17 wherein the imaging device comprises multiple image sensing arrays (ISAs) arranged at different focal distances coupled to an optical system that distributes the same target view to each ISA.

19. The apparatus of claim 17 wherein the imaging device comprises an image sensing array containing multiple image planes arranged at different focal distances, each of which can be read out individually.

20. An apparatus capable of three dimensional (3D) imaging from one vantage point independent of profilometry comprising:

a housing having a physical terminus;

an image sensing array (ISA); and

an optical element in optical communication with the ISA,

wherein all light received by the apparatus for 3D imaging and any light emitted by the apparatus for 3D imaging passes through a physical terminus of the instrument at which point a maximum separation between any two light rays used for 3D imaging does not exceed 2 inches.

21. The apparatus of claim 20 wherein a capture end further comprises:

an illumination source.

22. The apparatus of claim 20 wherein the optical element is one of a lens, a reflector, and a light guide.

23. The apparatus of claim 20 wherein three dimensional imaging is independent of time of flight of light reflected from the location to the image sensing array (ISA).

24. The apparatus of claim 20 wherein the three dimensional imaging is performed without requiring motion of the physical terminus of the apparatus.

25. The apparatus of claim 24 wherein the three dimensional imaging method is stereoscopy.

26. The apparatus of claim 20 further comprising a wireless data link.

27. The apparatus of claim 21 wherein the illumination source can vary an incident angle of light impinging on a target surface.

28. The apparatus of claim 24 wherein the three dimensional imaging method performs captures of data from at least two points of view to a target.

29. The apparatus of claim 28 wherein at least two captures are performed sequentially by a same ISA.

30. The apparatus of claim 20 further comprising a controller to automatically vary an optical path of the light rays used to capture a three dimensional image.

31. The apparatus of claim 20 further comprising a display to visualize the data collected.

32. The apparatus of claim 31 wherein visualized data guides a user in the capture of a target surface.

33. The apparatus of claim 20 wherein the 3D image can be made of a target surface that appears substantially homogeneous unless captured at finer than 300 pixels per inch resolution as measured at the target surface.

34. The apparatus of claim 20 wherein the 3D image can be made of a target surface that appears substantially homogeneous to an unaided human eye.

35. A method comprising:

illuminating a target with at least one emitter;

capturing a first intensity of reflected light from the target with at least one detector, the path of the reflected light from the emitter to the detector constituting an optical path length;

capturing a second intensity at a different optical path length; and

determining a distance to the target based on the first and second intensity.

36. The method of claim 35 further comprising:

varying the optical path length by at least one of: selecting a different emitter, selecting a different detector, moving an emitter, moving a detector, and altering an optical element in the optical path.

37. The method of claim 35 further comprising:

creating a three dimensional representation of at least a portion of the target.

38. The method of claim 35 wherein illuminating comprises:

pulsing the emitter at high frequency to differentiate from ambient illumination.

39. A method comprising:

obtaining a first image of a surface of a target;

obtaining a second image including a portion of the same surface at a higher surface pixel density; and

aligning the first and second image based on the content of each image, and without requiring other position reference information.

40. The method of claim 39 wherein at least one of the images is a two dimensional image.

41. The method of claim 39 wherein at least one of the images is a three dimensional image.

42. The method of claim 39 further comprising aligning a third image with at least one of the second or first images wherein the third image includes a different portion of the first image.

43. The method of claim 39 wherein the aligning assembles a three dimensional representation of at least a portion of the target.

44. The method of claim 39 wherein the two images are captured at the same time.

45. The method of claim 39 wherein the two images are captured by at least two zones of a single image sensing array.

46. A method comprising:

obtaining a first image of a first portion of a surface of a target using a capture device;

obtaining a second image of a second portion of a surface of the target using the capture device;

monitoring the motion of the capture device relative to the target between the first and second image captures; and

aligning the first and second image based on the motion monitoring information.

47. The method of claim 46 wherein monitoring comprises:

determining relative motion based on optically discernable features on the target surface.

48. The method of claim 46 wherein the monitoring comprises:

determining relative motion of the capture device by observing accelerations of the capture device.

49. The method of claim 46 wherein aligning assembles a three dimensional representation of at least a portion of the target.

50. The method of claim 47 wherein a subset of the features is only optically discernable when captured at finer than 300 pixels per inch resolution as measured at the target surface.

51. The method of claim 47 wherein a subset of the features is not discernable to an unaided human eye.

52. A method comprising:

capturing a first image of a first portion of a surface of a target using a capture device;

capturing a second image of a second portion of a surface of the target using the capture device;

moving the capture device relative to the target using a powered positioning device between capturing the first and second image;

aligning the first and second image based on the known position of capture device; and

determining a position for an adjacent capture based upon data known from at least one prior image.

53. The method of claim 52 wherein the capture device automatically acquires at least a portion of the target surface by determining a series of adjacent captures.

54. The method of claim 52 wherein the capture device is capable of capturing three dimensional range data.

55. An apparatus comprising:

a handheld probe for noncontact three dimensional digitizing, to provide feedback during capture local to the probe to guide a user in positioning the probe to capture the target surface.

56. The apparatus of claim 55 further comprising a wireless data link.

57. The apparatus of claim 55 wherein the handheld probe further comprises a display to visualize the data collected.

58. An apparatus comprising:

a handheld probe for noncontact three dimensional digitizing, to provide feedback during capture local to the probe to guide a user in positioning the probe to capture the target surface while allowing the user to look at one of the target and probe.

59. The apparatus of claim 58 further comprising a wireless data link.

60. The apparatus of claim 58 wherein the handheld probe further comprises a display to visualize the data collected.

* * * * *