HIGH PRESSURE PUMPING SYSTEM

Filed Nov. 19, 1968 4 Sheets-Sheet 1

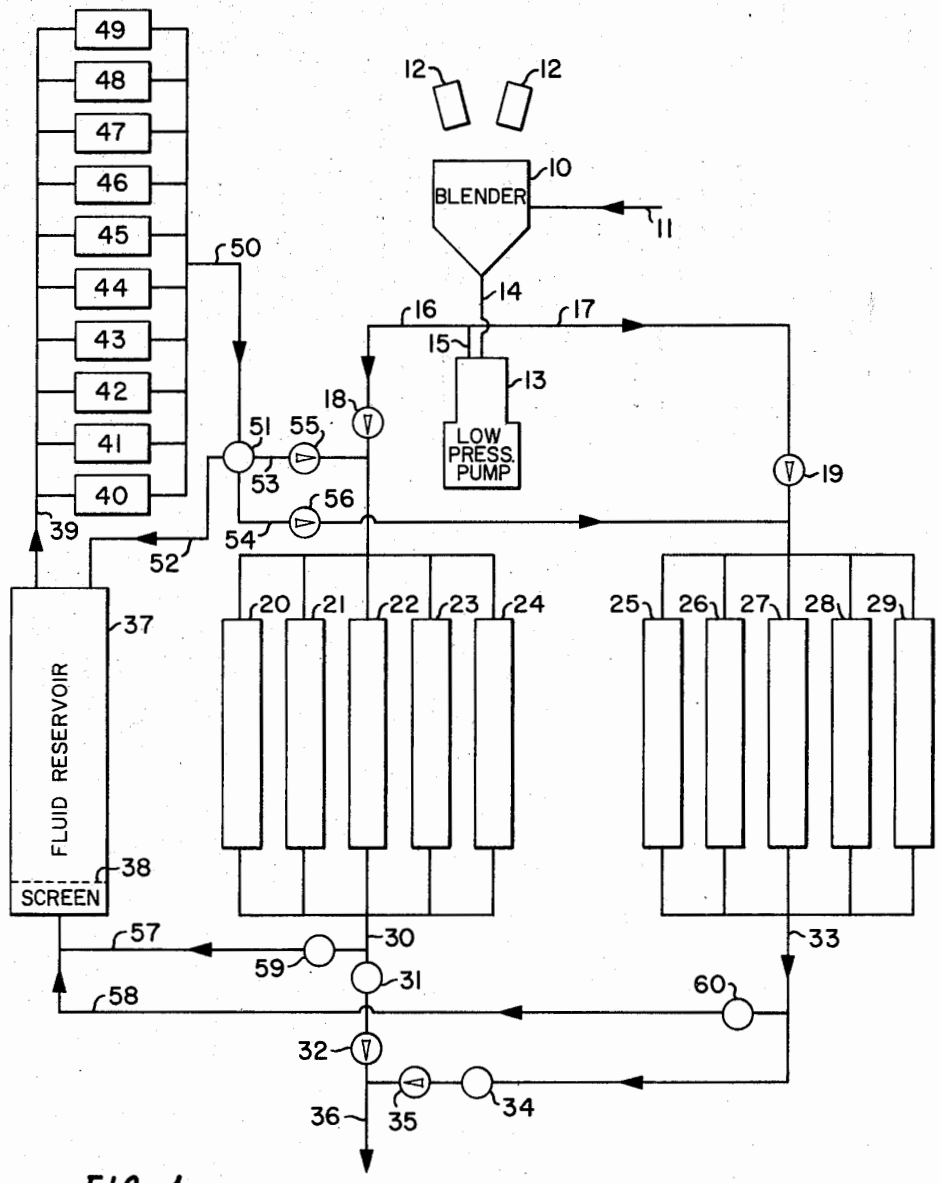

FIG. 1

JOHN E. ORTLOFF INVENTOR.

BY James E. Reed

ATTORNEY

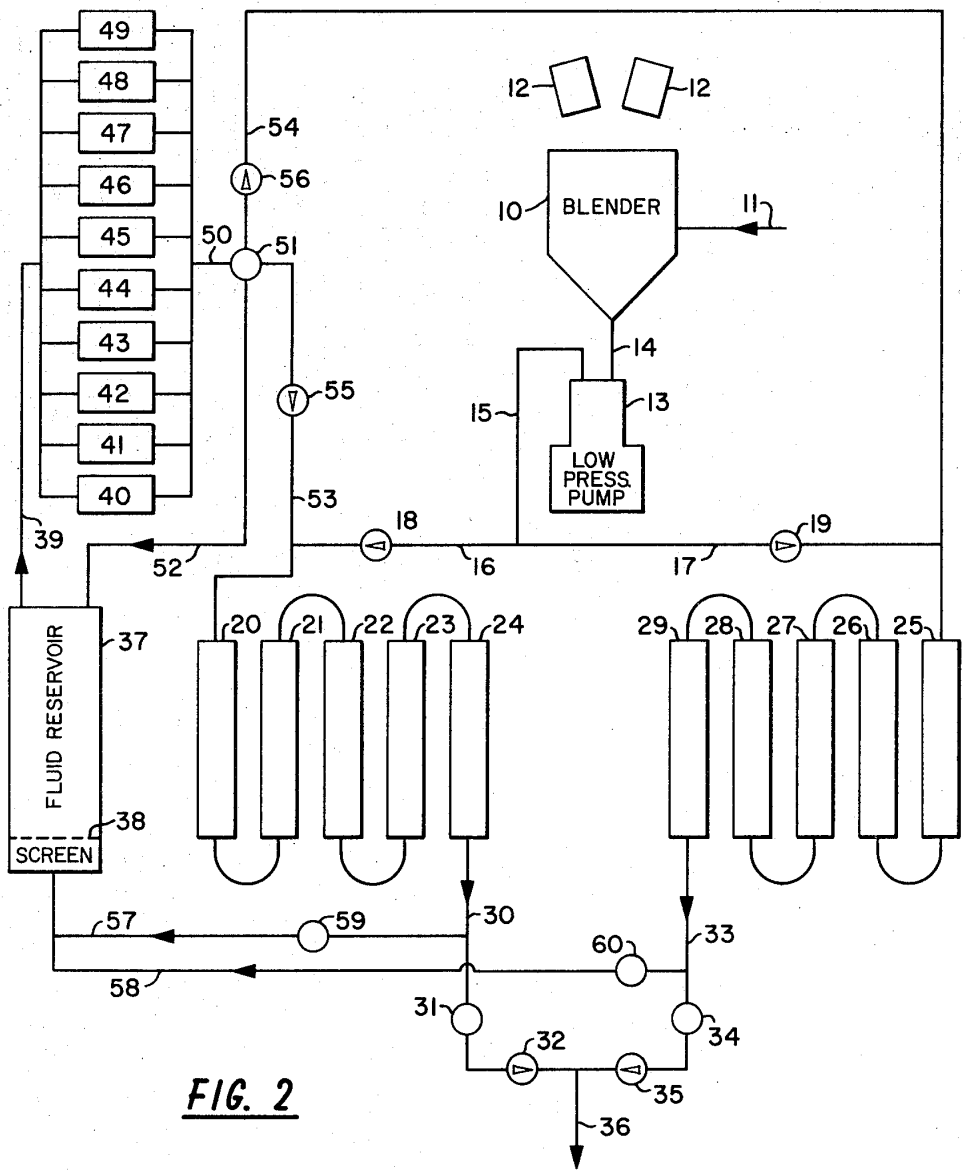

FIG. 2

JOHN E. ORTLOFF INVENTOR.

BY James E. Ford

ATTORNEY

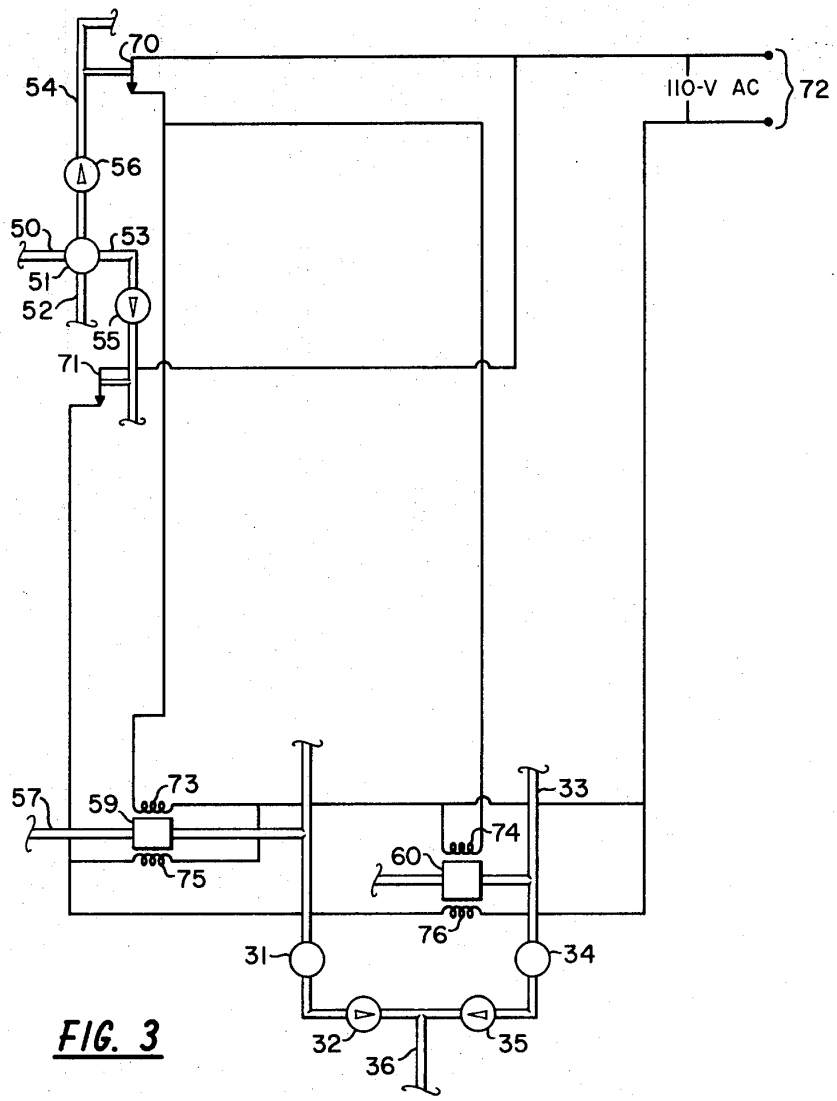

FIG. 3

JOHN E. ORTLOFF INVENTOR.

BY James E. Reed

ATTORNEY

HIGH PRESSURE PUMPING SYSTEM

Filed Nov. 19, 1968 4 Sheets-Sheet 4

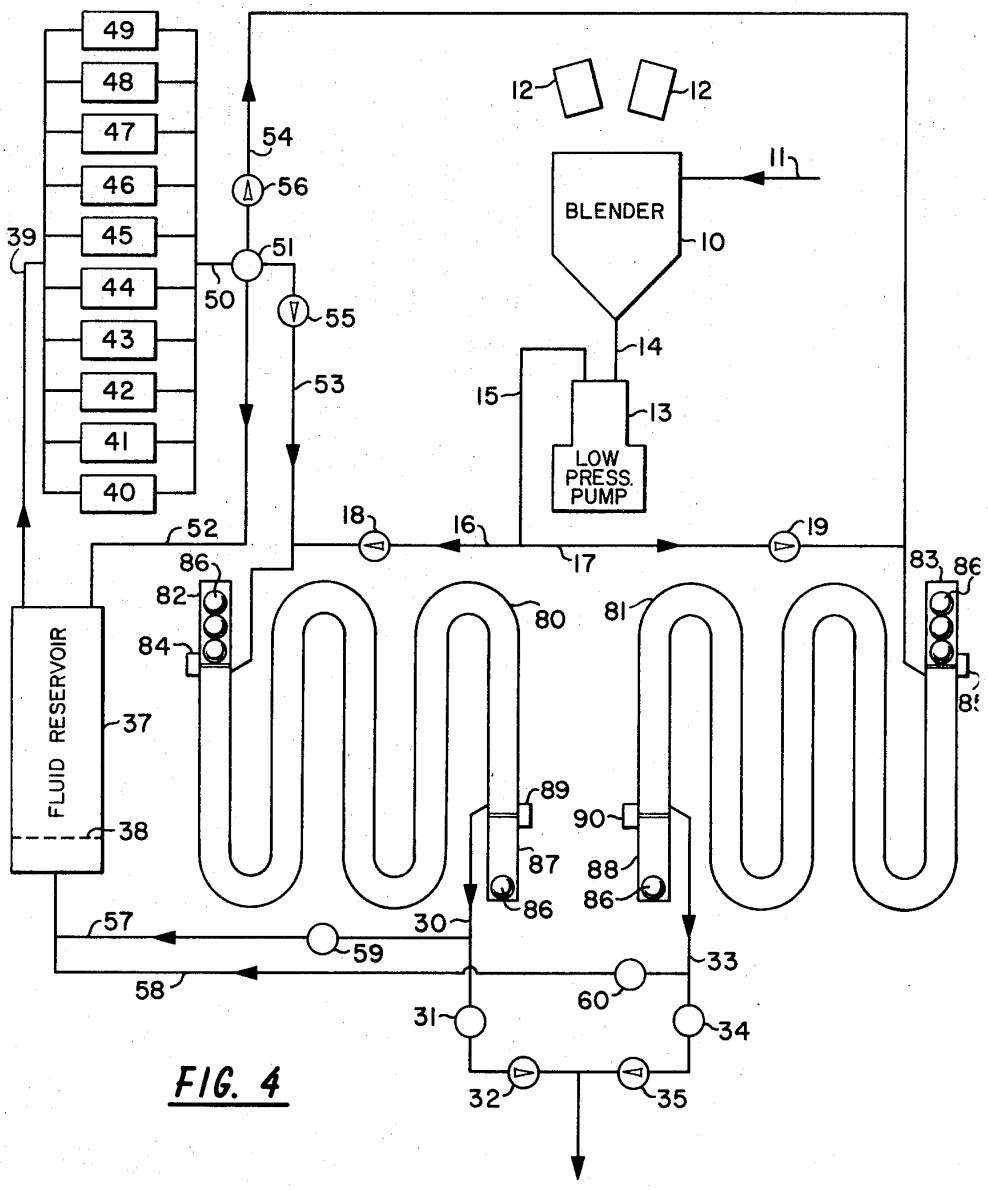

FIG. 4

JOHN E. ORTLOFF INVENTOR.

BY James E. Reed

ATTORNEY

United States Patent Office

3,560,053

Patented Feb. 2, 1971

1

3,560,053
HIGH PRESSURE PUMPING SYSTEM

John E. Ortloff, Houston, Tex., assignor to Esso Production Research Company, a corporation of Delaware

Filed Nov. 19, 1968, Ser. No. 776,949
Int. Cl. B65g 53/30
U.S. Cl. 302—14 4 Claims

ABSTRACT OF THE DISCLOSURE

A system for pumping a hydraulic fracturing fluid or similar liquid containing suspended solids at high pressure wherein the solids-laden fluid is charged into an accumulator at low pressure and then displaced from the accumulator at high pressure without passing through the high pressure pumping equipment.

BACKGROUND OF THE INVENTION

(1) Field of the invention

This invention relates to the pumping of oilfield hydraulic fracturing fluids and similar liquids containing suspended propping agents or other solid particles.

(2) Description of the prior art

The use of hydraulic fracturing for stimulating the production of crude oil and natural gas from wells penetrating subterranean reservoirs has grown rapidly in recent years. The methods generally employed involve the injection of water, crude oil, or a similar fluid into a well at a rate sufficient to break down the exposed formation and the subsequent introduction of oil, gelled water or other fluid containing suspended sand grains, glass beads, or a similar propping agent into the resultant fracture. The propping agent particles prevent complete closure of the fracture as the fracturing fluid leaks off into the adjacent formation and thus result in permeable channels through which fluids can later be injected or produced. The development of fractures with the required conductivities may in some cases necessitate the pumping of large volumes of fluid containing propping agent particles at pressures of 10,000 lbs. per square inch or higher.

The pumps used in hydraulic fracturing operations are generally high pressure triplex pumps driven by diesel or gas turbine engines. These pumps are usually capable of operating at pressures well in excess of those required in fracturing operations but maintenance costs are generally high because of damage to the liners, valves, and pistons. Experience has shown that sand grains, glass beads, steel shot, and other materials used as propping agents cause severe wear, particularly where the solid particles are present in high concentrations and high pumping rates are required. It is common practice to install new valves at about eight hour operating intervals and to provide standby units for use in case pump failures occur in the field. This has increased the cost of hydraulic fracturing operations and in some cases has made such operations impractical.

SUMMARY OF THE INVENTION

This invention provides an improved system for the high pressure pumping of hydraulic fracturing fluids and similar viscous liquids containing suspended solid particles that alleviate many of the difficulties outlined above. This system involves the suspension of sand or other particulate solids in the fluid by means of a blender or similar equipment, the pumping of the resultant suspension from the blender into the accumulators in each of two or more accumulator banks by means of a low pressure pump, the displacement of solids-laden fluid from each accumulator

2

bank in turn by pumping solids-free fluid from a fluid reservoir into each bank with high pressure pumps, and the displacement of solids-free fluid from each accumulator bank into the fluid reservoir by pumping more solids-laden fluid from the blender into each accumulator bank with the low pressure pump. The apparatus employed thus includes a blender, a low pressure pump, a plurality of accumulators, a sufficient number of high pressure pumps to secure the desired pumping rate, a fluid reservoir, and a control system for operating the equipment to permit continuous pumping of the solids-laden fluid under high pressure. This system avoids the necessity for handling fluid containing the suspended solids with the high pressure pumping equipment and therefore alleviates many of the difficulties due to severe wear of pump valves, liners, and pistons that are normally encountered in pumping fracturing fluid and similar liquids containing suspended solids under high pressures. Equipment maintenance expense and overall pumping costs are often considerably lower than in conventional operations.

BRIEF DESCRIPTION OF THE DRAWING

FIG. 1 in the drawing is a schematic diagram of equipment useful for the high pressure pumping of fluids containing suspended solids in accordance with the invention; FIG. 2 depicts an alternate arrangement utilizing accumulators connected in series, rather than in parallel as shown in FIG. 1; FIG. 3 is a fragmentary view showing a control system useful with the apparatus of FIGS. 1 and 2; and FIG. 4 depicts another alternate arrangement in which the control system of FIG. 3 may be employed.

DESCRIPTION OF THE PREFERRED EMBODIMENTS

The apparatus depicted in FIG. 1 of the drawing includes a bleander **10** used for the suspension of propping agent particles or other particulate solids in a fluid introduced through line **11** from a tank or other source not shown in the drawing. For hydraulic fracturing and similar operations carried out in the field, this will normally be a conventional track or skid-mounted unit including a tank containing a ribbon mixer and jets for providing the necessary agitation of the fluid and solids. It may also include equipment for monitoring the density of the slurry produced and proportioning devices for the continuous mixing in of both liquid and dry additives. Such units are available in various sizes, depending upon the volume of fluid and solids to be handled. A blender with a capacity of about 25 barrels of suspension per minute is adequate for most fracturing operations but larger units may in some cases be used.

One or more propping agent bins or similar devices **12** will normally be used to facilitate rapid addition of the propping agent particles or other solids to the fluid in the blender at a controlled rate. These generally include a belt conveyor or the like for feeding the solids and means for controlling the speed of operation to regulate the feed rate. In many cases, however, it will be satisfactory to load the solids by hand without using an automated loading device.

The blender referred to above is connected to the intake of a low pressure pump **13** by means of line **14**, which will ordinarily be a length of hose. The pump employed may be a low pressure centrifugal pump and will often be mounted on the blender itself. Experience has shown that the pumping of fluids containing suspended sand grains or other abrasive particles generally presents few problems at low pressures, even though the solid concentration is quite high, and that centrifugal pumps are therefore generally satisfactory for this purpose. The discharge line **15** from pump **13** is connected to lines **16** and **17** containing check valves **18** and **19** respectively.

The check valves are arranged to permit flow from the pump but prevent the passage of fluid in the opposite direction. Downstream of check valve **18**, line **16** is manifolded to the accumulator bank containing parallel accumulators **20**, **21**, **22**, **23**, and **24**. In like manner, line **17** is manifolded downstream of check valve **19** to a bank containing parallel accumulators **25**, **26**, **27**, **28**, and **29**. The accumulators will normally be elongated, fully enclosed horizontal tanks provided with inlets at one end and outlets at the other. Each accumulator must be capable of withstanding the maximum pressure developed during the pumping operation. The size of these units will depend primarily upon the particular fluid-solid system to be handled. In general, the unit should be sized so that the residence time in each accumulator is sufficiently short to prevent undue settling out of the suspended particles. If the viscosity of the fluid is low and the difference between the density of the suspended solid particles and that of the fluid is large, the volume of each accumulator will normally be relatively small. If, on the other hand, the fluid has a high viscosity and the density difference is small, each accumulator may be quite large. For field operations, the accumulators will normally be mounted on a truck or trailer to facilitate their transportation.

The outlet lines from each bank of accumulators are manifolded in a manner similar to the inlet lines. Line **30** extends from the manifold connecting accumulators **20** through **24** to a two-way valve **31** and a downstream check valve **32** which prevents flow back toward the accumulators. Line **33** extends in similar fashion from the manifold connecting accumulators **25** through **29** to a two-way valve **34** and a check valve **35**. Downstream from the check valves, the two lines feed into line **36** for the discharge of fluid containing suspended solid into a well, a pipeline, or the like.

The fluid used to displace the suspension from the accumulators is stored in a tank or fluid reservoir **37**. The volume of this reservoir should be somewhat greater than the volume of the accumulators and connecting lines in the system. A screen **38** is normally installed near the inlet end of the reservoir to isolate any solids that might be entrained in the incoming fluid. Line **39** extends from the reservoir to the inlet side of a plurality of high pressure pumps **40**, **41**, **42**, **43**, **44**, **45**, **46**, **47**, **48**, and **49**, connected in parallel. These will normally be high pressure positive displacement pumps. Although ten high pressure pumps are shown in the drawing, a greater or lesser number may be employed. The number used will depend upon the pumping rate required. The discharge lines from the high pressure pumps are manifolded and connected to line **50** which is in turn connected to the intake side of a four-way remotely controlled valve **51**. This valve contains one inlet and is designed to permit the discharge of fluid through one of three different outlets. Line **52** extends from one outlet of the four-way valve to fluid reservoir **37** to permit the recycling of solids-free fluid. Lines **53** and **54** containing check valves **55** and **56** extend from other outlets of the valve to lines **16** and **17** at points downstream from check valves **18** and **19**. High pressure fluid can thus be injected into either bank of accumulators.

The discharge lines from the two accumulator banks, designated by reference numerals **30** and **33**, are connected to the fluid reservoir **37** by means of lines **57** and **58** containing remotely controlled valves **59** and **60** respectively. These latter two valves are provided with screens which surround the valve seats and prevent the entrapment of solid particles between the seats and valve bodies as the valves close. Suitable valves fitted with screens that may be utilized for this purpose are available commercially and will be familiar to those skilled in the art.

FIG. 2 of the drawing illustrates an alternate arrangement of the apparatus in which the accumulators **20** through **24** and **25** through **29** are connected in series instead of in parallel. The components used are the same in both arrangements and hence the same reference numerals are used to identify individual pieces of equipment. This use of the accumulators in series is advantageous in certain cases because it eliminates the possibility of by-passing individual accumulators when displacing the fluid containing suspended solids from an accumulator bank.

A control circuit that may be utilized with either the system of FIG. 1 or that of FIG. 2 is depicted in FIG. 3 of the drawing. The circuitry employed included pressure sensitive electrical switches **70** and **71** located in lines **53** and **54** respectively at points downstream from check valves **55** and **56**. Switch **70** controls the current flowing in parallel loops extending from a 110 volt alternating current source **72** through the coil of a solenoid **73** associated with remote control valve **59** and a solenoid **74** associated with remote control valve **60**. These solenoids are arranged so that valve **59** is opened and valve **60** is closed when switch **70** is closed and the circuits are energized. Pressure sensitive switch **71** controls the current in parallel loops extending through solenoids **75** and **76**, associated with the same two remote control valves. When switch **71** is closed and the associated circuits are energized, valve **59** is closed and valve **60** is opened. This permits cyclic operation of the system so that fluid containing suspended solids from one bank of accumulators is passed to the well, pipeline, or the like through line **36** while fluid free of solids from the other bank of accumulators is being returned to the fluid reservoir **37**. Switches **70** and **71** are actuated alternately in response to changes in pressure produced by the movement of four-way valve **51**. This valve permits high pressure fluid to pass from line **50** through either line **53** or line **54** but not through both simultaneously. Only one pressure-sensitive switch is therefore closed at any one time. The four-way valve may be operated manually if desired but will normally be motor-driven and provided with a timer so that fluid flow is switched from line **53** to line **54** and back again at predetermined intervals. It will be understood, of course, that the invention is not restricted to this particular control system and that other systems can also be employed.

The apparatus described above is used for the pumping of liquid containing suspended solids by first starting the blender **10**. Oil, water, or other liquid is introduced into the blender through line **11**. The propping agent particles or other solids to be suspended in the liquid are added from bins **12**. After the blender is operating satisfactorily, the liquid-solid suspension formed therein is withdrawn through line **14** to low pressure pump **13** and pumped through lines **16** and **17** into the two accumulator banks. During this initial stage of the operation, the automatic control system is not actuated. The two-way valves **31** and **34** are kept closed to prevent any fluid from passing through line **36** to the well, pipeline or conduit through which the suspension is to be pumped. The remotely controlled valves **59** and **60** are operated manually so that both are in the open position. Any air, gas or liquid present in the accumulators on startup can thus be displaced by the incoming slurry through lines **57** and **58** to the fluid reservoir **37**. Check valves **18** and **19** permit the passage of the suspension to the accumulators and check valves **55** and **56** prevent the suspension from passing through lines **53** and **54** to the four-way valve **51**.

After the accumulators **20** through **24** and **25** through **29** have been filled, the low pressure pump **13** and the blender **10** are temporarily shut down. The manually operated two-way valves **31** and **34** are opened. Four-way valve **51** is positioned so that fluid can be pumped through line **50** into line **53** and to accumulators **20** through **24**. Remotely controlled valves **59** and **60** are operated manually so that valve **59** is open and valve **60** is closed.

Once the valves have been set, the high pressure pumps **40** through **49** are started. Fluid from reservoir **37** is withdrawn through line **39** to the pump manifold and pumped through lines **50** and **53** to accumulators **20** through **24**. The suspension initially present in these accumulators is displaced by the incoming fluid through lines **30** and **36** to the well, pipeline, or other conduit. Check valves **18** and **35** prevent flow of the solids-free liquid and suspension into other parts of the system. Pumping is continued under high pressure until sufficient solids-free liquid from reservoir **37** has been injected into accumulators **20** through **24** to displace the suspension initially present therein. At this point, accumulators **20** through **24** will contain solids-free liquid and accumulators **25** through **29** are filled with liquid containing suspended solids.

The automatic control system shown in FIG. 3 of the drawing is now actuated. Four-way valve **51** is repositioned so that fluid from the high pressure pumps passes through line **54** to accumulators **25** through **29**. Pressure sensitive switch **70** in the control system energizes solenoids **73** and **74** so that remote control valve **59** is in the open position and valve **60** is closed. Low pressure pump **13** and blender **10** are started so that fluid containing suspended solids is pumped through line **16** and check valve **18** into accumulators **20** through **24**. The high pressure downstream of check valve **19** keeps this valve closed. The fluid and suspended solids injected into accumulators **20** through **24** displace solids-free liquid through line **57** into fluid reservoir **37**. Simultaneously, fluid containing suspended solids initially present in accumulators **25** through **29** is displaced at high pressure by solids-free fluid through line **33** and check valve **35** to line **36** leading to the well, pipeline or other conduit. The high pressure closes check valve **32** and prevents flow of the fluid and suspended solids to other parts of the system. The pumping of the fluid containing suspended solids into accumulators **20** through **24** at low pressure and solids-free fluid into accumulators **25** through **29** at high pressure continues until the fluid initially present in both accumulator banks has been displaced. When this point is reached, four-way valve **51** is changed to divert the solids-free fluid through line **53** into accumulators **20** through **24**. This closes check valve **18** and permits check valve **19** to open. Remotely controlled valve **60** is simultaneously opened and valve **59** is closed by the activation of pressure switch **71**. The fluid containing suspended solids from accumulators **20** through **24** is now discharged at high pressure through line **30**, check valve **32** and line **36** to the well, pipeline, or other conduit while solids-free fluid from accumulators **25** through **29** is being returned to tank **37**. The high pressure closes check valve **35** to restrict the flow to line **36**. The operation is continued in this cyclic fashion until the desired volume of fluids containing suspended solids has been delivered to the well, pipeline or other conduit.

FIG. 4 in the drawing illustrates a further embodiment of the invention in which balls or pigs are used to separate solids-laden fluid from solids-free fluid in the accumulators. The apparatus of FIG. 4 is generally similar to that of FIGS. 1 and 2 but utilizes two elongated accumulators **80** and **81** in place of the accumulator banks described earlier. Components which are common to the embodiments of FIGS. 1 and 2 and that of FIG. 4 are identified by the same reference numerals. The two accumulators **80** and **81** are of substantially uniform diameter over their entire length and are fitted with pig launchers **82** and **83** near their upper ends. These launchers include solenoid operated gates **84** and **85** by means of which balls or pigs **86** are released one at a time into the accumulators. The pig launchers can be controlled by means of timers similar to that used to control the operation of four-way valve **51** or can be actuated in response to changes in pressure in the system by electrically connecting the solenoid coils into the circuits containing pressure switches **70** and **71** in FIG. 3.

Each of the accumulators of FIG. 4 is also fitted with a pig trap near its lower end. These traps, identified by reference numerals **87** and **88**, include solenoid operated gates **89** and **90**. Gates **84** and **89** operate simultaneously, as do gates **85** and **90**. Here again timers or the pressure switches referred to above can be utilized to control the frequency of operation. The electrical connections for actuating the gates with the pressure switches will be obvious to those skilled in the art.

The operation of the apparatus of FIG. 4 is similar to that of the earlier embodiments except that the pig launcher and pig trap gates are actuated each time an accumulator is switched from solids-free to solids-laden fluid or vice versa. This results in the insertion of a ball or pig between adjacent batches of solids-free and solids-laden fluid and reduces adverse effects due to mixing. The balls or pigs must be transferred from the traps to the launchers periodically and hence it will generally be preferable to employ traps and launchers capable of holding more than the four balls or pigs shown. This and similar modifications to the apparatus depicted will be apparent to those skilled in the art.

It will be apparent from the above description of the system that the method and apparatus of the invention permit the pumping of fluids containing suspended solids at high pressures without the necessity for passing the solids through the high pressure pumping equipment. This alleviates difficulties normally encountered due to wear of the high pressure pump valves, liners and pistons and often permits substantial reductions in over-all pumping costs. Although the system has been described primarily in terms of hydraulic fracturing operations, it will be apparent that the method and apparatus can in some cases be employed for abrasion drilling and other operations that also require the pumping of liquids containing suspended solids under high pressures.

What is claimed:

1. A system for pumping a fluid and suspended solids which comprises: a blender for suspending solid particles in an input liquid; a low pressure pump; a low pressure intake line extending from said blender to said low pressure pump; a first accumulator; a second accumulator; a low pressure discharge line extending from said low pressure pump to each of said accumulators, said discharge line containing check valves for preventing backflow from each accumulator; a fluid reservoir; a low pressure recycle line extending to said reservoir from each of said accumulators, said recycle line containing remotely-controlled valves for controlling the recycle of fluid form each of said accumulators; a high pressure pump; a high pressure intake line extending from said fluid reservoir to said high pressure pump; a high pressure discharge line extending from said high pressure pump to each of said accumulators, said discharge line containing a valve for alternately directing fluid to one of said accumulators and then the other and check valves for preventing backflow from each accumulator; means responsive to pressure downstream of said check valves in said high pressure discharge line for actuating said remotely-controlled valves in said recycle line to permit the alternate recycling of fluid from one of said accumulators and then the other; and discharge lines extending from each of said accumulators for the discharge of fluid containing suspended solids, said discharge lines containing check valves for preventing backflow to each accumulator.

2. Apparatus as defined by claim **1** wherein said first and second accumulators are fitted with pig launchers and pig traps.

3. Apparatus as defined by claim **1** wherein said first accumulator is one of a first plurality of accumulators connected in parallel and said second accumulator is one of a second plurality of accumulators connected in parallel.

4. Apparatus as defined by claim 1 wherein said first accumulator is one of a first plurality of accumulators connected in series and said second accumulator is one of a second plurality of accumulators connected in series.

References Cited

UNITED STATES PATENTS

2,672,370	3/1954	Jones et al.	302—14
2,708,140	5/1955	Reed	302—14
3,140,123	7/1964	Bowen	302—14
3,254,924	6/1966	Harrison et al.	302—14
3,312,506	4/1967	Baker	302—66
3,328,089	6/1967	Hodgson et al.	302—14
3,449,013	6/1969	Sakamoto et al.	302—14

EVON C. BLUNK, Primary Examiner

R. S. GAITHER, Assistant Examiner

U.S. Cl. X.R.

302—66