UNITED STATES PATENT AND TRADEMARK OFFICE

BEFORE THE PATENT TRIAL AND APPEAL BOARD

VOLKSWAGEN GROUP OF AMERICA, INC.,
Petitioner

v.

YECHEZKAL EVAN SPERO,
Patent Owner

Case IPR2023-00328
U.S. Patent No. 10,894,503 B2

PETITION FOR *INTER PARTES* REVIEW
OF U.S. PATENT NO. 10,894,503

Mail Stop "PATENT BOARD"
Patent Trial and Appeal Board
U.S. Patent & Trademark Office
P.O. Box 1450
Alexandria, VA 22313-1450

SPERO EX. 2005

TABLE OF CONTENTS

I. INTRODUCTION AND TECHNOLOGY OVERVIEW 1
II. GROUNDS FOR STANDING (37 C.F.R. § 42.104(A)) 3
III. IDENTIFICATION OF CHALLENGE (37 C.F.R. § 42.104(B)) 3
IV. THE '503 PATENT 4
A. Summary 4
B. Independent Claims 26 and 65 5
C. Prosecution History Summary 5
D. Level of Ordinary Skill in the Art 6
E. Claim Construction 6
"light sources" (claim 65) 6
V. GROUND 1: THE COMBINATION OF BEAM AND THOMINET RENDERS OBVIOUS CLAIMS 26-27 AND 30-31. 8
A. A POSA would have been motivated to combine Beam and Thominet with a reasonable expectation of success 10
B. Independent Claim 26 17
1. [26.P] 17
2. [26.1] 18
3. [26.2] 19
4. [26.3] 21
5. [26.4] 23
6. [26.5] 25
7. [26.6] 27
8. [26.7] 31
9. [26.8] 32
10. [26.9] 33
11. [26.10] 35
C. Claim 27 37
D. Claim 30 37
E. Claim 31 38

SPERO EX. 2005

VI. GROUND 2: THE COMBINATION OF BEAM, THOMINET, AND STAM RENDERS OBVIOUS CLAIM 65. 38

A. A POSA would have been motivated to combine Beam, Thominet, and Stam with a reasonable expectation of success. 40

B. Independent Claim 65 42

1. [65.P] 42

2. [65.1] 42

3. [65.2] 42

4. [65.3] 43

5. [65.4] 43

6. [65.5] 44

7. [65.6] 45

8. [65.7] 47

9. [65.8] 48

10. [65.9] 49

11. [65.10] 52

VII. GROUND 3: THE COMBINATION OF BEAM, THOMINET, AND KOBAYASHI RENDERS OBVIOUS CLAIMS 32-36. 53

A. A POSA would have been motivated to combine Kobayashi with Beam-Thominet with a reasonable expectation of success. 53

B. Claims 32/33/34/35/36 58

VIII. GROUND 4: THE COMBINATION OF BEAM, THOMINET, STAM, AND KOBAYASHI RENDERS OBVIOUS CLAIM 70. 62

A. A POSA would have been motivated to combine Kobayashi with Beam-Thominet-Stam with a reasonable expectation of success. 62

B. Claim 70 62

IX. GROUND 5: THE COMBINATION OF BEAM, THOMINET, STAM, AND BRAUN RENDERS OBVIOUS CLAIMS 66-67. 62

A. A POSA would have been motivated to combine Braun with Beam-Thominet with a reasonable expectation of success. 62

B. Claims 66/67 66

SPERO EX. 2005

X. GROUND 6: THE COMBINATION OF BEAM, THOMINET, AND HARBERS RENDERS OBVIOUS CLAIMS 28-29. 67

A. A POSA would have been motivated to combine Harbers with Beam-Thominet with a reasonable expectation of success. 67

B. Claim 28 73

C. Claim 29 75

XI. GROUND 7: THE COMBINATION OF BEAM, THOMINET, STAM, AND HARBERS RENDERS OBVIOUS CLAIMS 68-69.....77

A. A POSA would have been motivated to combine Harbers with Beam-Thominet-Stam with a reasonable expectation of success. 77

B. Claim 68 77

C. Claim 69 78

XII. GROUND 8: THE COMBINATION OF KARLSSON AND HARBERS RENDERS OBVIOUS CLAIMS 26-31, 65, AND 68-69.....78

"directional light [clusters/sources]" [26.6]/[65.9] 78

"predefined illuminance" [65.6]/[65.8] 79

A. A POSA would have been motivated to combine Karlsson and Harbers with a reasonable expectation of success. 81

B. Claims 26 and 65 86

1. [26.P]/[65.P] 86

2. [26.1]/[65.1].....88

3. [26.2]/[65.2].....89

4. [26.3] 91

5. [26.4]/[65.3].....92

6. [26.5]/[65.4].....95

7. [26.6] 96

8. [26.7] 102

9. [26.8] 102

10. [26.9] 104

11. [26.10] 106

C. Additional Elements of Independent Claim 65.....107

SPERO EX. 2005

1. [65.5] 108
2. [65.6] 109
3. [65.7] 111
4. [65.8] 113
5. [65.9] 115
6. [65.10] 117

D. Claim 27 119
E. Claims 28/68.....119
F. Claims 29/69.....122
G. Claim 30 124
H. Claim 31 124

XIII. GROUND 9: THE COMBINATION OF KARLSSON, HARBERS, AND GOTOU RENDERS OBVIOUS CLAIMS 32-36 AND 70.....125

A. A POSA would have been motivated to combine Gotou with Karlsson-Harbers with a reasonable expectation of success. 125
B. Claims 32/33/34/35/36/70.....131

XIV. GROUND 10: THE COMBINATION OF KARLSSON, HARBERS, AND BRAUN RENDERS OBVIOUS CLAIMS 66-67. 134

A. A POSA would have been motivated to combine Braun with Karlsson-Harbers with a reasonable expectation of success. 134
B. Claims 66/67.....138

XV. PETITIONER IS UNAWARE OF SECONDARY CONSIDERATIONS ..141

XVI. DISCRETIONARY CONSIDERATIONS UNDER SECTIONS 314(A)/325(D) STRONGLY FAVOR INSTITUTION.....142

A. The *Fintiv* factors strongly favor institution. 142
B. *Advanced Bionics* strongly favors institution. 144

XVII. MANDATORY NOTICES (37 C.F.R. § 42.8(A)(1)).....144

A. Real Party In Interest (37 C.F.R. § 42.8(b)(1)).....144
B. Related Matters (37 C.F.R. § 42.8(b)(2)) 144
C. Lead and Back-up Counsel (37 C.F.R. § 42.8(b)(3)).....145
D. Service Information (37 C.F.R. § 42.8(b)(4)).....145

SPERO EX. 2005

XVIII. CONCLUSION 147

SPERO EX. 2005

PETITIONER'S EXHIBIT LIST

Exhibit No.	Description
1001	U.S. Patent No. 10,894,503 B2 to Spero ("the '503 patent")
1002	File History of U.S. Patent No. 10,894,503 B2 ("Prosecution History")
1003	Declaration of Dr. Jianzhong Jiao ("Jiao Decl.") in support of Petition for *Inter Partes* Review of U.S. Patent No. 10,894,503
1004	*Curriculum Vitae* of Dr. Jianzhong Jiao
1005	U.S. Patent No. 6,144,158 to Beam
1006	U.S. Patent Publication No. 2001/0019486 to Thominet
1007	WIPO Patent Publication No. 2001/070538 to Stam *et al*.
1008	U.S. Patent No. 6,049,749 to Kobayashi
1009	WIPO Patent Publication No. 2002/004247 to Braun *et al*.
1010	WIPO Patent Publication No. 1998/054030 to Karlsson
1011	WIPO Patent Publication No. 2001/001038 to Harbers *et al*.
1012	U.S. Patent No. 5,588,733 to Gotou
1013	*Intentionally Left Blank*
1014	*Intentionally Left Blank*
1015	Westermann, "History and Scientific Back-up," 48th Session of GRE, EUREKA Project 1403, Informal Document No. 30, April 30, 2002
1016	"Adaptive Front Lighting Systems (AFS)," 48th Session of GRE, EUREKA Project 1403, Informal Document No. 28, April 12, 2002
1017	Hogrefe *et al*., "Adaptive Light Pattern – A New Way to Improve Light Quality," SAE Transactions, Vol. 106, No. 6, pp. 1-10, February 27, 1997
1018	Löwenau *et al*., "Adaptive Light Control – A New Light Concept Controlled by Vehicle Dynamics and Navigation, SAE Transactions, Vol. 107, No. 6, pp. 31-36, February 26, 1998
1019	Manassero *et al*., "Adaptive Headlamp: A contribution for Design and Development of Motorway Light," SAE Transactions, Vol. 107, No. 6, pp. 1-6, February 26, 1998
1020	Michael Hamm, "System Strategies for Adaptive Lighting Systems," 2001 Symposium: Progress in Automobile Lighting (PAL), pp. 368-380, September 26, 2001

Exhibit No.	Description
1021	U.S. Patent Publication No. 2013/0258688 to Kalapodas
1022	*Intentionally Left Blank*
1023	Manassero et al., Adaptive Lighting Systems: Technical Solutions and Methodological Approach for Photometric Specifications, Progress in Automotive Lighting Vol. 6, pp. 514-525 (1999).
1024	Hanno Westermann, Lighting Performance Requirements in Vehicle Lighting Exemplified by System Requirements for AFS, Progress in Automotive Lighting Vol. 6, pp. 807-820 (1999).
1025	Diem et al., Analysis of the Eye-Movement Behaviour During Use Moveable Headlamps, Progress in Automotive Lighting Vol. 5, pp. 185-207 (1999).
1026	Kobayashi & Sugimoto, Development of the Phase-I AFS Front Lighting System, Progress in Automotive Lighting Vol. 5, pp. 449-464 (1999).
1027	*Intentionally Left Blank*
1028	Bernhard Wörner, Adaptive Frontlighting – Experimental System, Development and Functional Evaluation, Progress in Automotive Lighting Vol. 6, pp. 844-853 (1999).
1029	*Intentionally Left Blank*
1030	Assessment of Headlamp Glare and Potential Countermeasures, Survey of Advanced Front Lighting System (AFS) Research and Technology, National Highway Traffic Safety Administration (2005)
1031	*Intentionally Left Blank*
1032	First Amended Complaint, Torchlight Techs. LLC v. Daimler AG, et al., Civil Action No. 1:22-cv-00751 (D. Del.), filed August 26, 2022 (ECF No. 24)
1033	File History of Ex Parte Reexamination of U.S. Patent No. 9,955,551, Control No. 90/014,815
1034	*Intentionally Left Blank*
1035	United States District Courts – National Judicial Caseload Profile, June 2022
1036	U.S. Patent No. 5,523,193 to Nelson
1037	*Intentionally Left Blank*

SPERO EX. 2005

Exhibit No.	Description
1038	U.S. Patent No. 4,662,746 to Hornbeck
1039	U.S. Patent No. 5,061,049 to Hornbeck
1040	U.S. Patent No. 5,933,183 to Enomoto *et al*.

SPERO EX. 2005

I. INTRODUCTION AND TECHNOLOGY OVERVIEW

Petitioner Volkswagen Group of America, Inc. ("Petitioner") requests *inter partes* review ("IPR") and cancellation of claims 26-36 and 65-70 of U.S. Patent No. 10,894,503 ("the '503 patent") to Yechezkal Evan Spero, purportedly exclusively licensed to Torchlight Technologies LLC (collectively "Patent Owner"). EX1032, Amended Complaint, 8. By 2000—years before the earliest possible priority date—everything claimed in the '503 patent was well-known. EX1003, ¶¶45-47. No claim elements were new and nothing was new about how those elements were combined in the claims. *Id.*, ¶48.

Petitioner's expert, Dr. Jianzhong Jiao, has over 30 years of experience in adaptive lighting, automotive lighting, and optical engineering. *Id.*, ¶¶9-20. His testimony supports that the Grounds demonstrate the conventional functionality of the '503 patent claims, rendering all challenged claims unpatentable. *Id.*, ¶¶1-41.

From 1992-1999, a global consortium of headlamp and automotive manufacturers participated in the EUREKA project to advance adaptive front lighting systems (AFS). EX1003, ¶49; EX1015, 3-6; EX1016, 1-19; EX1023, 514-15; EX1024, 819.

By 1997, adaptive (dynamic) lighting was designed to increase safety and comfort over fixed (static) headlamps. EX1003, ¶50; EX1017, 3-10; EX1018, 33-36; EX1019, 1-2; EX1020, 368-378; EX1024, 819; EX1025, 202; EX1028, 844.

SPERO EX. 2005

Directional light sources produced an adaptive light pattern by varying illumination characteristics. EX1003, ¶51; EX1017, 3-10; EX1018, 33-36; EX1019, 1-2; EX1020, 368-378.

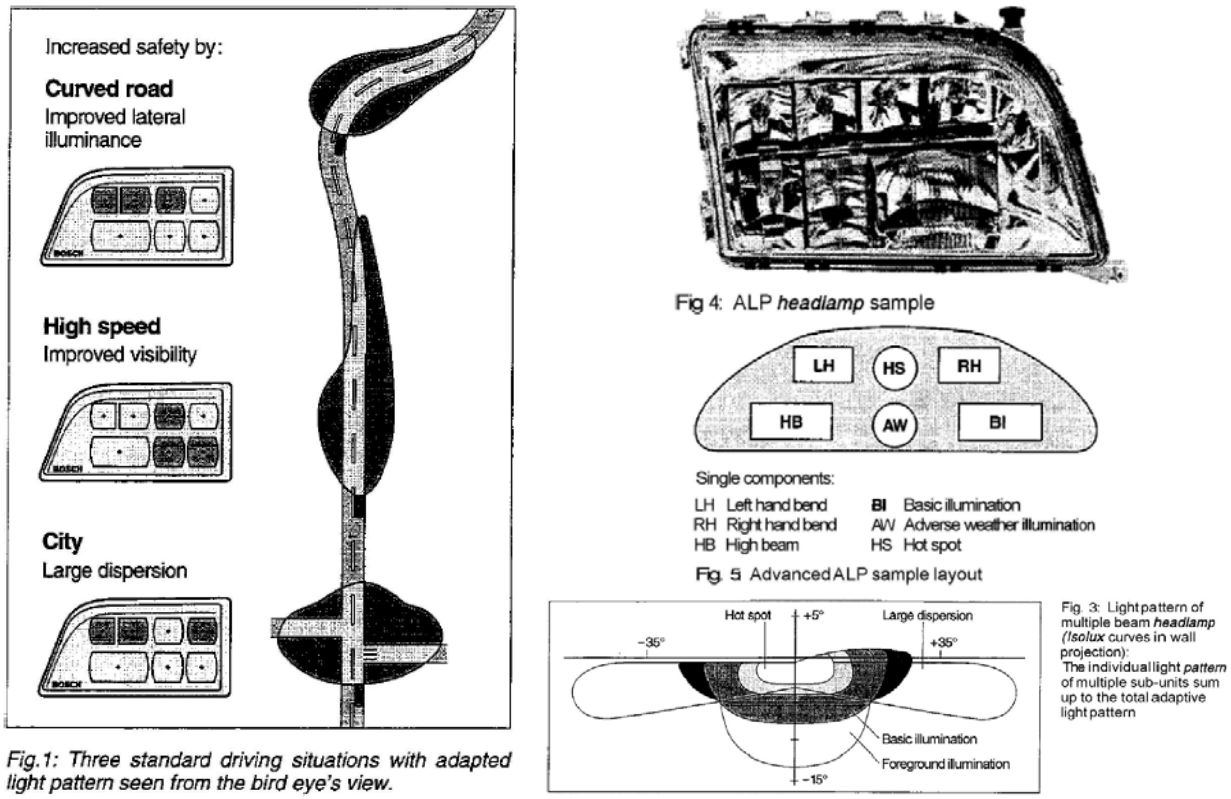

EX1017, FIGS. 1, 3-5.

By 2000, adaptive headlamps with multiple directional light sources and sensors detected and reduced glare, and arrays of independently controlled light sources were developed with sufficient illuminance, directionality, and dynamic control. EX1003, ¶¶52-55; EX1005, 1:5-3:44, 4:9-59; EX1010, 1:10-26, 9:18-26, 20:29-32; EX1015, 6-18, 21; EX1009, 16:6-25, 20:15-33; EX1023, 514-15; EX1024, 815-16.

II. GROUNDS FOR STANDING (37 C.F.R. § 42.104(A))

Petitioner certifies that the ’503 patent is available for IPR. Petitioner is not barred or estopped from requesting IPR. Torchlight Technologies LLC filed and served a complaint in Civil No. 1:22-cv-00751 on June 7, 2022, alleging infringement of the ’503 patent. This Petition is being filed within one year of service on Volkswagen Group of America, Inc.

III. IDENTIFICATION OF CHALLENGE (37 C.F.R. § 42.104(B))

Ground	References	Basis	Claims
1	Beam (EX1005), Thominet (EX1006)	§103	26-27, 30-31
2	Beam, Thominet, Stam (EX1007)	§103	65
3	Beam, Thominet, Kobayashi (EX1008)	§103	32-36
4	Beam, Thominet, Stam, Kobayashi	§103	70
5	Beam, Thominet, Stam, Braun (EX1009)	§103	66-67
6	Beam, Thominet, Harbers (EX1011)	§103	28-29
7	Beam, Thominet, Stam, Harbers	§103	68-69
8	Karlsson (EX1010), Harbers	§103	26-31, 65, 68-69
9	Karlsson, Harbers, Gotou (EX1012)	§103	32-36, 70
10	Karlsson, Harbers, Braun	§103	66-67

SPERO EX. 2005

Even if the ’503 patent was entitled to benefit of its earliest-filed provisional application:

- Beam, U.S. Patent No. 6,144,158, issued November 7, 2000, is prior art under §102(b).
- Thominet, U.S. Patent Publication No. 2001/0019486, published September 6, 2001, is prior art under §102(a).
- Stam, WIPO Patent Publication No. 2001/070538, published September 27, 2001, is prior art under §102(a).
- Kobayashi, U.S. Patent No. 6,049,749, issued April 11, 2000, is prior art under §102(b).
- Braun, WIPO Patent Publication No. 2002/004247, published January 17, 2002, is prior art under §102(a).
- Harbers, WIPO Patent Publication No. 2001/001038, published January 4, 2001, is prior art under §102(b).
- Karlsson, WIPO Patent Publication No. 1998/054030, published December 3, 1998, is prior art under §102(b).
- Gotou, U.S. Patent No. 5,588,733, issued December 31, 1996, is prior art under §102(b).

IV. THE ’503 PATENT

A. Summary

The ’503 patent claims recite known schemes implemented by a controller to control light sources/clusters based on sensor data. EX1003, ¶56; EX1001, 102:62-103:17. The specification leaves to a POSA to determine the “predefined

illuminance," without describing an illuminance level, algorithms, or control steps. EX1003, ¶¶57-59. Unsurprisingly, a POSA would have readily understood such control (including predefined illuminance) in an adaptive headlamp system. *Id*.

B. Independent Claims 26 and 65

The independent claims recite many patentably indistinct elements—the same prior art disclosures map to those corresponding elements (e.g., [26.P]-[26.2]/[65.P]-[65.2], [26.4]/[65.3], [26.5]/[65.4], [26.10]/[65.10]). EX1003, ¶¶60-61; Appendix A.

The disclosures mapped below for the directional light clusters/sources, sensor, controller, etc., of claims 26-36, apply equally to claims 65-70. EX1003, ¶¶62-64. Minor phrasing differences do not affect the substantive application of the art. *Id.*

C. Prosecution History Summary

Outside of non-art rejections, claims 1-70 issued without significant examination—art-based rejection was overcome as allegedly not qualifying as prior art (having a priority date of January 24, **20<u>12</u>**). EX1003, ¶¶65-66; EX1002, 194-199, 207-228, 247-252, 272-289, 292-299, 310-337. No art applied here was considered by the Office.

SPERO EX. 2005

D. Level of Ordinary Skill in the Art

For the '503 patent, a POSA at the time[1] of the alleged invention would have had a bachelor's degree (B.S.) in mechanical engineering, electrical engineering, optical engineering, applied physics, or an equivalent field, as well as at least 2 years of industry experience in the area of automotive lighting and lighting-control systems. The POSA may work as part of a team, for example, with computer engineers to integrate, program, etc., controllers and various control inputs to affect control of a given light source. EX1003, ¶¶42-44.

E. Claim Construction

In IPR, claims are "construed using the same claim construction standard that would be used to construe the claim in a civil action under 35 U.S.C. 282(b)." 37 C.F.R. § 42.100(b). Claim terms must be given their ordinary and customary meaning as understood by a POSA at the time of the invention, in light of the specification and prosecution history. *Id.*; *Phillips v. AWH Corp.*, 415 F.3d 1303, 1312-1313 (Fed. Cir. 2005) (en banc); 83 Fed. Reg. 51,340 (Oct. 11-2018); EX1003, ¶¶67-68.

"light sources" (claim 65)

Patent Owner submitted a proposed claim construction in a reexamination of U.S. Patent No. 9,955,551 ("the '551 patent"), but the Central Reexamination Unit

[1] Without conceding, Petitioner uses July 12, 2002 as the earliest effective priority date. The POSA definition would not change based on a later priority date.

SPERO EX. 2005

did not address the proposed construction. EX1033, 15 ("*light source* to mean individual LED") [2], 19 ("*light source* to mean an individual LED"); EX1003, ¶69.

The '503 patent, which shares the same specification, states "[a]s used herein, the term 'light source', LED or 'solid state light source' means any system that is capable of receiving an electrical signal and producing light in response to the signal." EX1001, 17:7-10. Further, the '503 patent states "[t]hus, the term 'light source' should be understood to include light emitting diodes of all types…[and] incandescent and discharge light sources." *Id*., 17:10-20. Therefore, a POSA would have understood that "light source" includes any known headlamp light sources, for example but not limited to, incandescent, discharge, laser diode, and LED light sources that are electrically controllable, which includes the combination of light sources and spatial light modulators, for example, microbeam sources and spotlight beam sources. EX1003, ¶70; EX1005, 8:4-17; EX1010, 4:32-5:10; EX1009, 14:16-20.

Furthermore, Patent Owner's proposed construction would not be applicable here at least because the '503 patent involves different claims. EX1003, ¶71. Additionally, the claims do not recite "LED light source," and therefore do not require the light source to be an LED. *Id.*

[2] Emphasis added throughout, unless noted.

The applied references also cover Patent Owner's proposed construction of a "light source" to mean an "individual LED." EX1005, 8:4-17 ("*light emitting diodes*"); EX1010, 4:32-5:10 ("*light-emitting diodes*"); EX1003, ¶72. Thus, the challenged claims are unpatentable under either construction.

Without waiver, Petitioner does not believe any other claim terms require specific construction and should receive their plain and ordinary meaning, in the context of the '503 patent specification, under *Phillips*.[3] Under any reasonable construction, the challenged claims are unpatentable. EX1003, ¶73.

V. GROUND 1: THE COMBINATION OF BEAM AND THOMINET RENDERS OBVIOUS CLAIMS 26-27 AND 30-31.

Beam discloses every feature in claims 26-27 and 30-31. The specific portions of Beam that disclose each feature are provided and explained below. To avoid doubt, Beam is combined with Thominet, for [26.6] (and [65.9] in Ground 2)—directional light clusters/sources. EX1003, ¶¶74-89, 115.

Beam discloses "[t]he *angular* position or attenuation of *each of the microbeams* is *independently* set by the controller 108." EX1005, 4:46-48, FIGS. 1-2, 4, Abstract, 7:25-29, 8:4-17, 8:23-34. Each microbeam is a directional "cluster" or "source," having its own independent *angular* position, that combines to form the headlamp beam; so Beam's lamp 202 and SLM 203 (*see* Figure 2) form at least one

[3] Petitioner reserves the right to challenge the claims under 35 U.S.C. §112 in other forums.

directional light cluster/source to provide illumination in desired subsections. *Id.*, 7:25-29, 8:4-17, 8:23-34, 4:26-59, 5:3-21, FIGS. 2, 4-6; EX1003, ¶¶75-84, 116. Beam also discloses clusters that include more than one microbeam. EX1005, 4:26-59, 5:3-21, FIGS. 2, 4-6, 4:46-48; EX1003, ¶116.

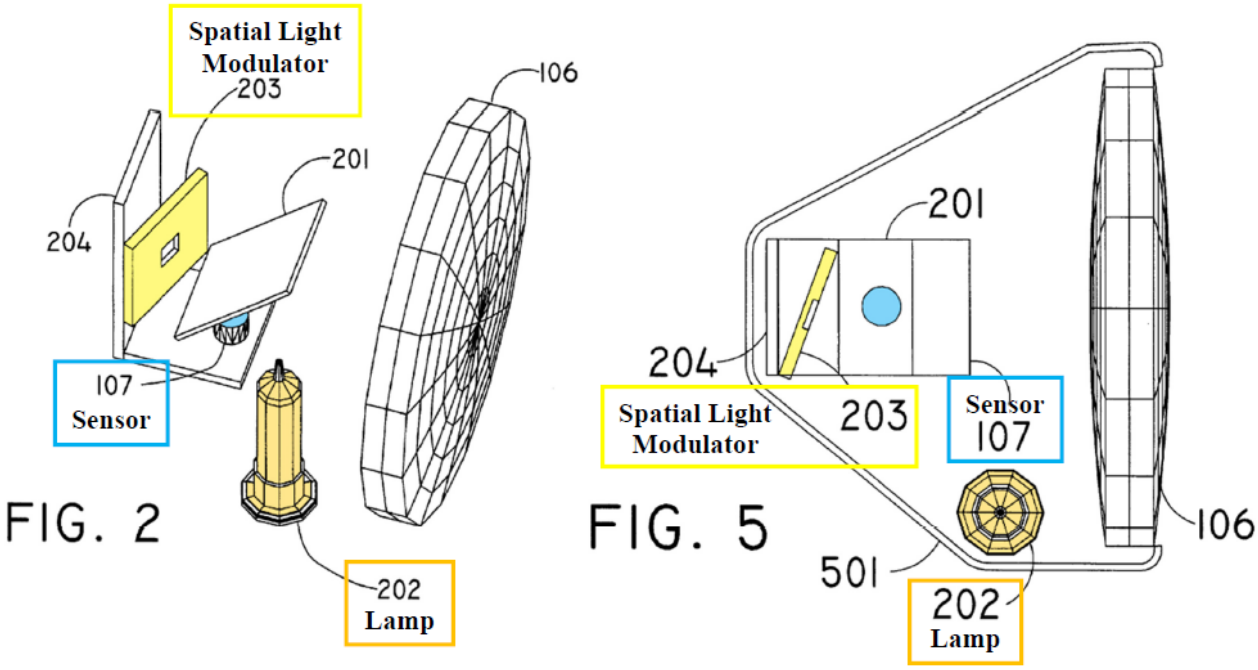

EX1005, FIGS. 2, 5 (annotated).

Beam's LED array has the same functionality as lamp 202 and SLM 203. EX1005, 3:61-64, 5:3-16, FIGS. 4, 6, 8:4-17. So, Beam's LED array also includes directional light clusters/sources. *Id.*; *id.*, 4:26-59, FIGS. 2, 4-6; EX1003, ¶¶80, 117.

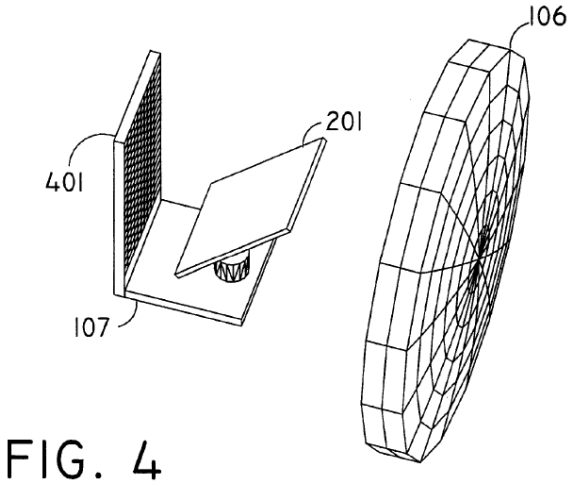

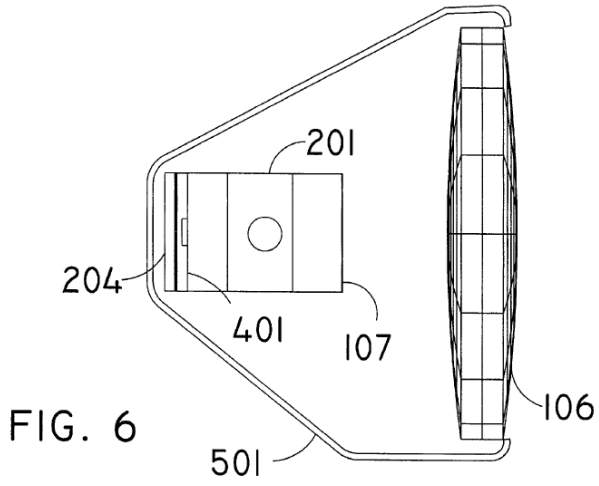

EX1005, FIGS. 4, 6.

Thus, Beam discloses "directional light [clusters/sources]"—independently controllable angular microbeam clusters/sources—that "create an output headlight beam meeting the determined illumination requirements"/"achieve the determined illumination levels" as recited in [26.6]/[65.9]. EX1003, ¶118. If Patent Owner argues, incorrectly, that Beam does not, Thominet does. *Id.*, ¶¶119-120.

A. A POSA would have been motivated to combine Beam and Thominet with a reasonable expectation of success.

Thominet provides implementation detail for "directional light [clusters/sources]" for different functions. EX1003, ¶¶85, 121. So, it would have been obvious to a POSA to implement Thominet's multiple directional beam regions—through either software or hardware—for different functions in Beam's system. *Id.*

Indeed, Thominet discloses such an implementation to *automatically* provide different spatial distributions for improved visibility in different situations (low

visibility, fog, low/high speeds, recognizing counter traffic, curves, etc., *see* EX1006, ¶¶7-8, 23-26, FIGS. 1-2), thereby automating some of Beam's *manual* control methods and improving driver safety. EX1003, ¶¶86-89, 122-123; EX1005, 3:29-44, 3:8-14, 5:33-54, 7:1-13; EX1006, ¶26.

First, including an additional control technique (software implementation) for Beam—Thominet's *known technique* of using multiple directional beam regions for different functions—would have added different functions to Beam's visibility for different driving situations, thereby increasing safety. EX1003, ¶124. Beam discloses "[t]he *angular* position" of each microbeam can be set by controller 108, which commands SLM 203 in illuminator 109, to reduce glare. EX1005, 4:26-59, 5:3-21, FIGS. 1-2, 5, Abstract, 8:4-17; EX1003, ¶124.

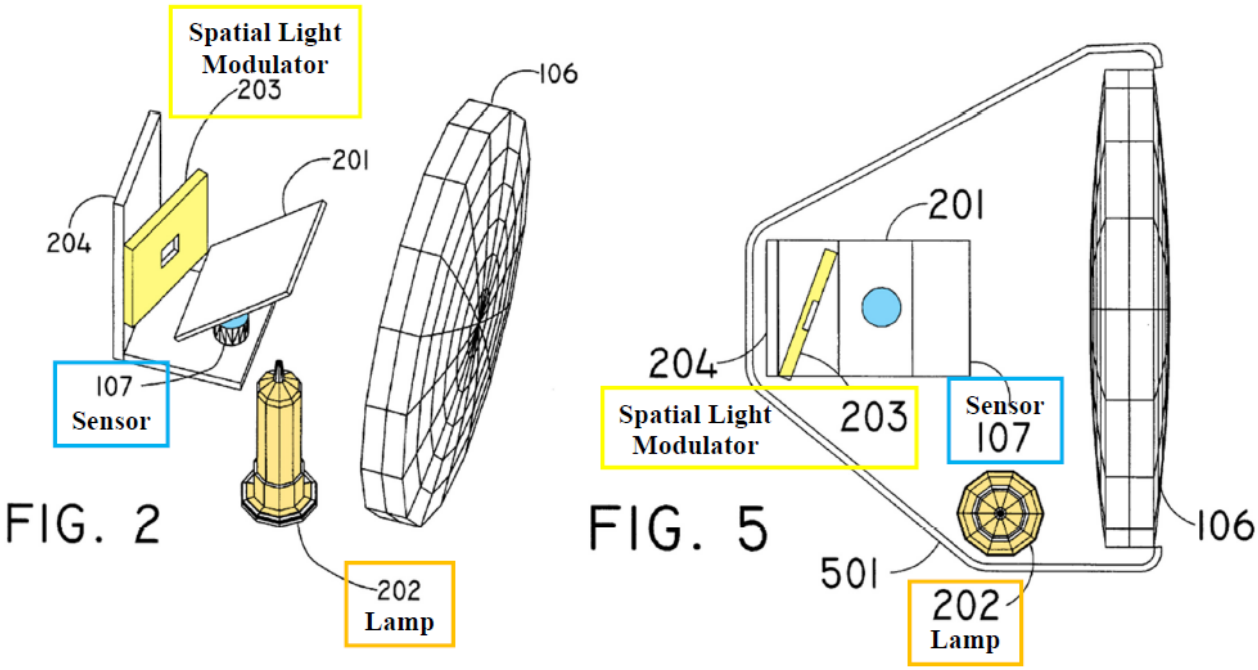

EX1005, FIGS. 2, 5 (annotated).

Beam's techniques and system of controlling individual microbeams emphasize safety of all drivers. EX1005, 3:8-45, 6:53-7:13. Controllable headlamps "provide greatly improved safety and comfort to the motoring public," and a "brighter headlight beam while simultaneously protecting…all vehicles ahead," increases safety. EX1005, 3:8-45. Beam enables "the driver to see more clearly at night," while protecting others from glare. *Id.*; *id.*, 4:9-24, 6:9-27; EX1003, ¶125.

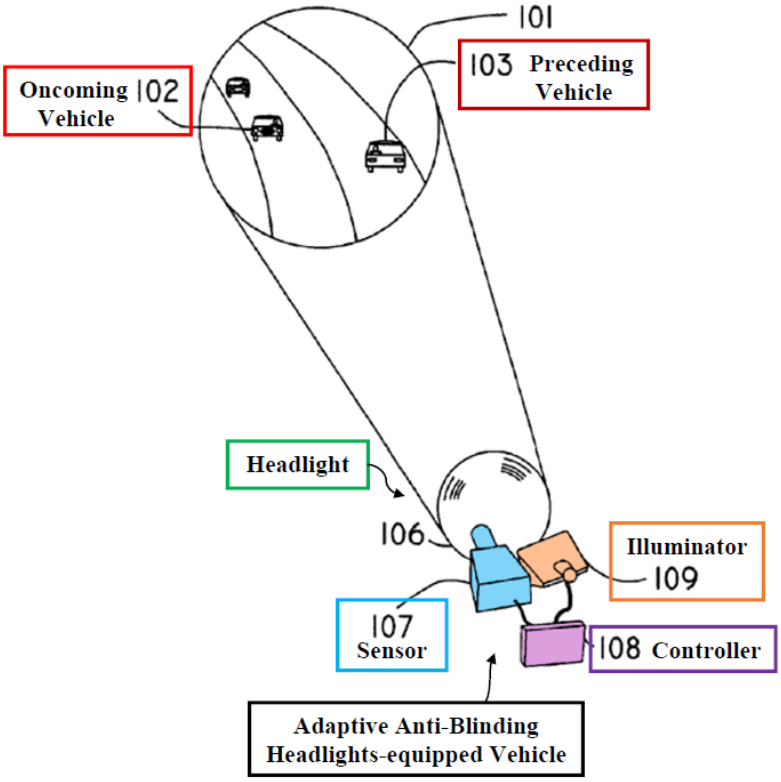

EX1005, FIG. 1 (annotated).

Beam recognizes the safety benefits of different spatial distributions "for conditions like rain, snow, or fog." EX1005, 3:29-36, 1:54-59, 4:48-59. And Thominet's *technique* (software implementation), like Beam, enhances driver visibility, increasing safety—using multiple directional beam regions (clusters) for

different functions. EX1006, ¶¶17-18, 21-26, FIGS. 1-3, ¶¶3, 20, 27, 5-8. Semiconductor light sources 10 are arranged in different beam regions 22, 24, 26, 28 for different driving situations. *Id.*, ¶¶7-8, 17-18, 21-27, FIGS. 1-3, ¶¶7, 23; EX1003, ¶¶126-128.

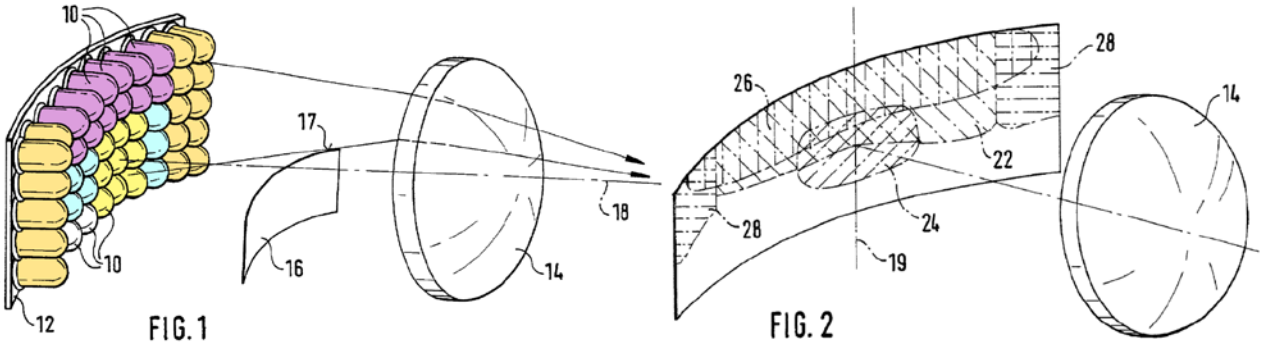

EX1006, FIGS. 1-2 (annotated).

Thominet's express control of having multiple directional beam regions (clusters), implemented with Beam's controller 108/illuminator 109 (including SLM 203), would have provided Beam's system with different spatial distributions for different driving situations beyond reducing glare for drivers, thereby improving safety. EX1003, ¶129. This mere application of Thominet's known technique (software implementation: multiple directional beam regions for different functions), to Beam's similar, known device (dynamic system with controllable microbeams), in the same way. *Id.*, ¶130; *KSR Int'l Co. v. Teleflex Inc.*, 550 U.S. 398, 417 (2007). Thominet's known technique is fully described along with its benefits (improved visibility for different functions, thereby increasing safety); thus,

a POSA would have readily applied it to similar systems, such as Beam's, in the same way. EX1003, ¶130; *KSR*, 550 U.S. at 419-421.

A POSA would have had a reasonable expectation of success combining Beam and Thominet, for example, by simply modifying software instructions in memory of Beam's controller/processor to organize Beam's array of microbeams into multiple directional beam regions for different functions. EX1003, ¶131. This would have been routine and well within a POSA's skill due to the similarities in Beam's and Thominet's adaptive systems—their common components were well-known and there would have been no limitations for a POSA to make such modification. *Id.*, ¶132.

Second, a POSA would have sought to incorporate *known components* (hardware implementation) of Thominet's semiconductor light sources 10 on curved surface 12 (arranged in different beam regions 22, 24, 26, 28, *see* EX1006, ¶¶17-20, 23-26, FIGS. 1-2, 5-7) into Beam's system (with flat array of light sources 401). EX1003, ¶133. Again, this would have provided different spatial distributions for different driving situations, improving visibility and thereby safety. EX1006, ¶¶17-20, 23-26, FIGS. 1-2, 5-7; EX1003, ¶133.

Beam's LED array has the same functionality as lamp 202 and SLM 203, and each light source is individually controlled. EX1005, 3:61-64, 5:3-16, FIGS. 4, 6, 4:26-59, 8:4-17; EX1003, ¶134.

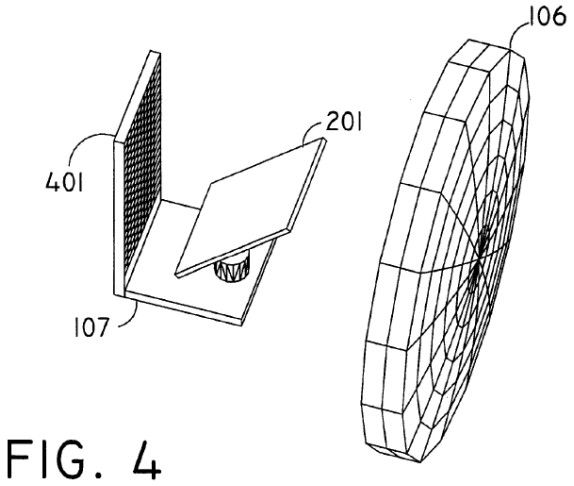

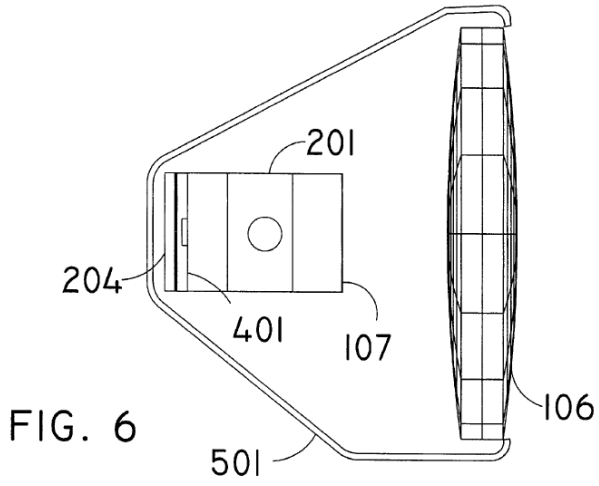

EX1005, FIGS. 4, 6.

Through its *system components* (hardware implementation), Thominet, like Beam, seeks to enhance driver visibility and thereby increase safety. EX1003, ¶135. Indeed, semiconductor light sources 10 arranged on curved surface 12 provide beam regions 22, 24, 26, 28 for different driving situations. EX1006, ¶¶7-8, 17-18, 21-26, FIGS. 1-2; EX1003, ¶135.

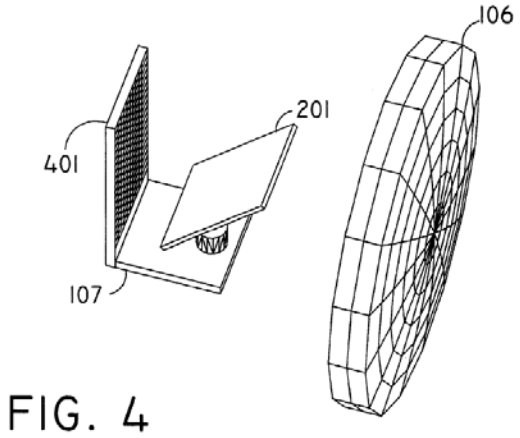

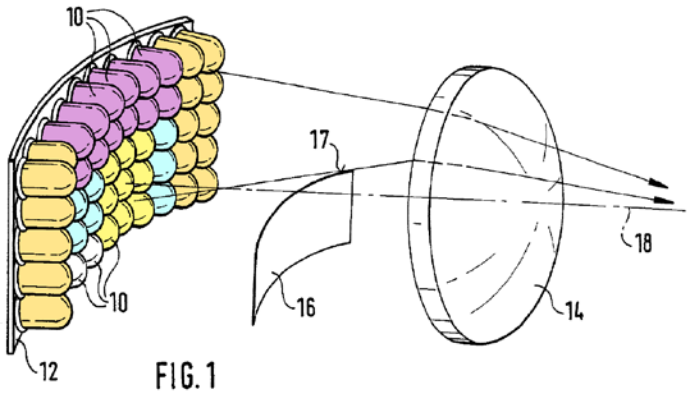

EX1005, FIG. 4. EX1006, FIG. 1 (annotated).

Like the software implementation, this hardware combination—Beam's array of light sources 401 and Thominet's semiconductor sources 10 on curved surface 12

arranged in directional beam regions 22, 24, 26, 28—would have provided Beam's system with different spatial distributions for different driving situations, as in Thominet. EX1003, ¶136. This would have been merely combining prior-art elements or a simple substitution of one known element for another (Beam's array of light sources 401 on a flat surface and Thominet's semiconductor sources 10 on a curved surface 12) according to known methods (disclosed in Beam and Thominet) to yield predictable results (improved visibility and safety). *Id.*; *KSR*, 550 U.S. at 415-418.

A POSA would have had a reasonable expectation of success combining Beam and Thominet, for example, by simply modifying the flat surface of Beam's array of light sources 401 with Thominet's curved surface 12 to provide multiple light clusters/sources (e.g., directional beam regions 22, 24, 26, 28) for different functions. EX1003, ¶137. This would have been routine and well within a POSA's skill due to the similarities in Beam's and Thominet's systems—their common components were well-known and there would have been no limitations for a POSA to make such modifications. *Id.*, ¶¶138-139.

B. Independent Claim 26[4]

1. [26.P]

Beam discloses "[a] *method* for enabling drivers of vehicles to obtain…*bright headlights*" and an adaptive anti-blinding headlight (AABH) system. EX1005, 8:18-22, FIGS. 1-2, 7, 3:8-24, 4:10-59; EX1003, ¶140. Beam's "controller module uses…*sensor spatial data (video) to determine*…*illumination sources*…in the headlight's *field-of-view*…to *control the Illuminator*." EX1005, 6:14-19, 4:10-25, FIGS. 1, 1C-1D, 7,; EX1003, ¶¶140-141.

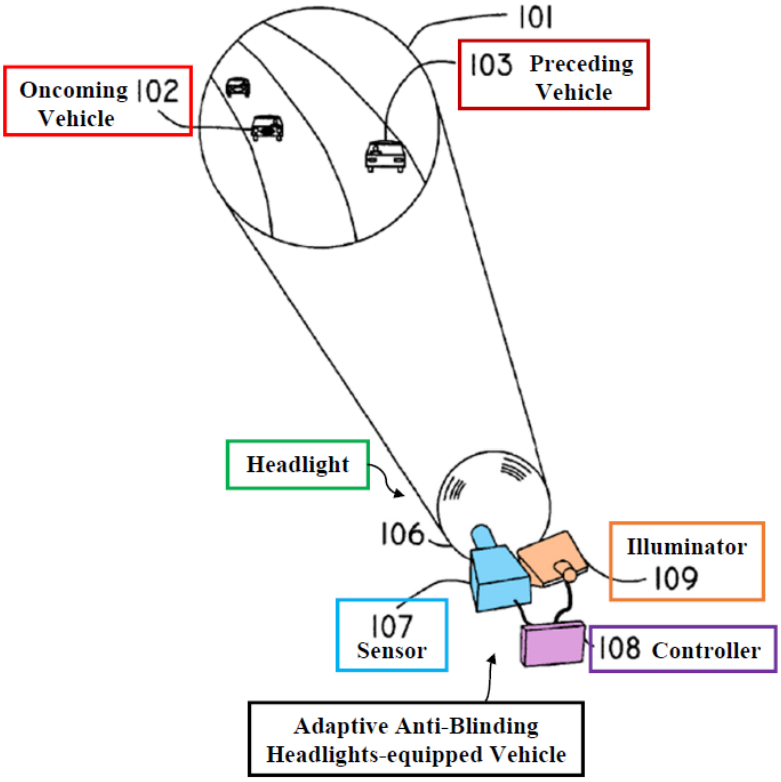

EX1005, FIG. 1 (annotated).

[4] All independent claim language is in Appendices A and B.

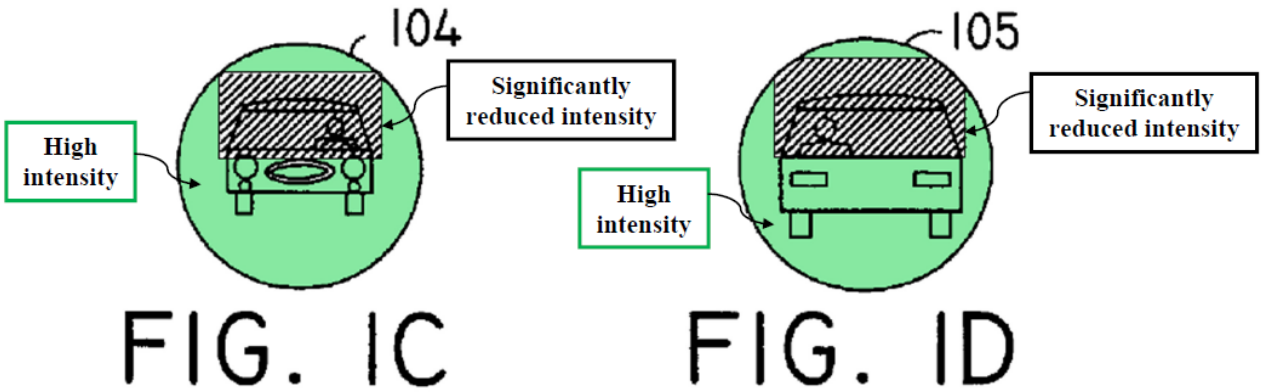

EX1005, FIGS. 1C-1D (annotated).

2. [26.1]

Beam's *sensor 107* detects headlights/taillights of an oncoming/preceding vehicle 102, 103 and "*spatial scene data* from sensor 107…[is] *input* to a processor 1105." EX1005, 4:10-25, 5:33-35, FIGS. 1-2, 5, 6:12-14, 4:26-36, 8:23-27; EX1003, ¶142-144.

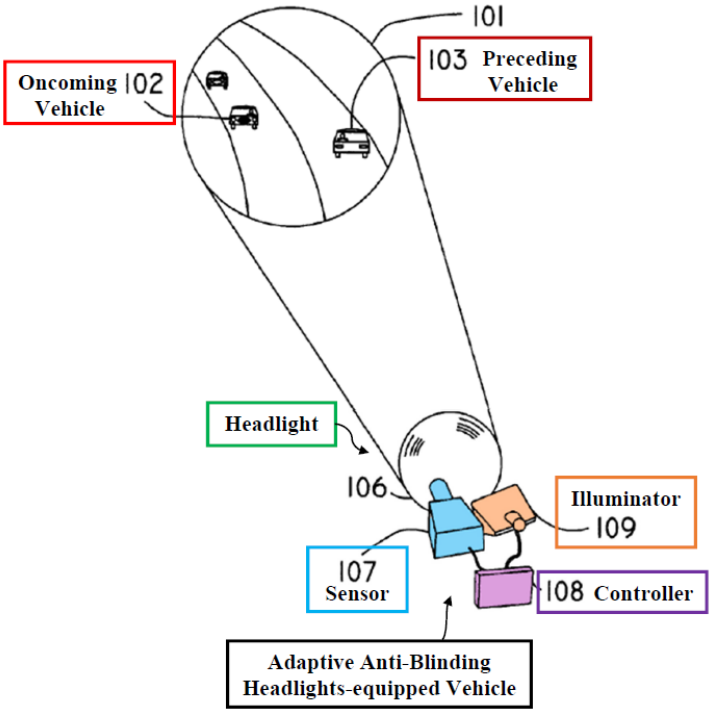

EX1005, FIG. 1 (annotated).

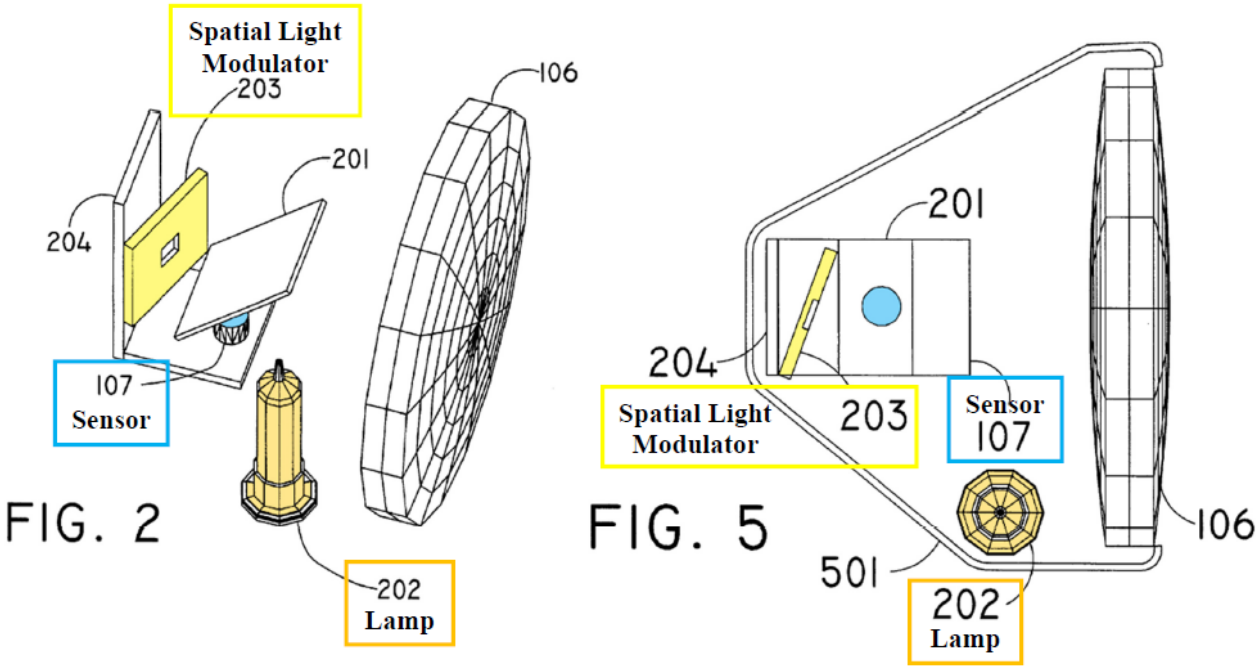

EX1005, FIGS. 2, 5 (annotated).

3. [26.2]

Beam detects headlights/taillights of an oncoming/preceding *vehicle* 102, 103 in a field-of-view 101. EX1005, 4:10-25, 6:14-19, FIGS. 1, 1A-1B; EX1003, ¶¶145-146. The sensor spatial data is "predefined as relevant" because Beam "tracks the location of the…vehicle" "to determine the locations to be blanked." EX1005, 5:46-54, 6:11-27, FIGS. 1, 1C-1D, 7; EX1003, ¶¶146-147.

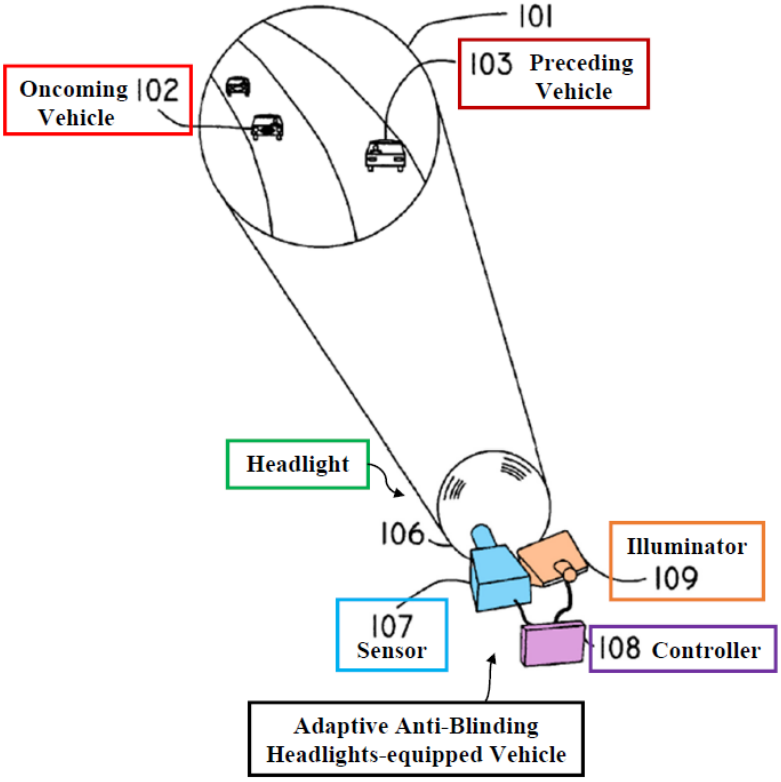

EX1005, FIG. 1 (annotated).

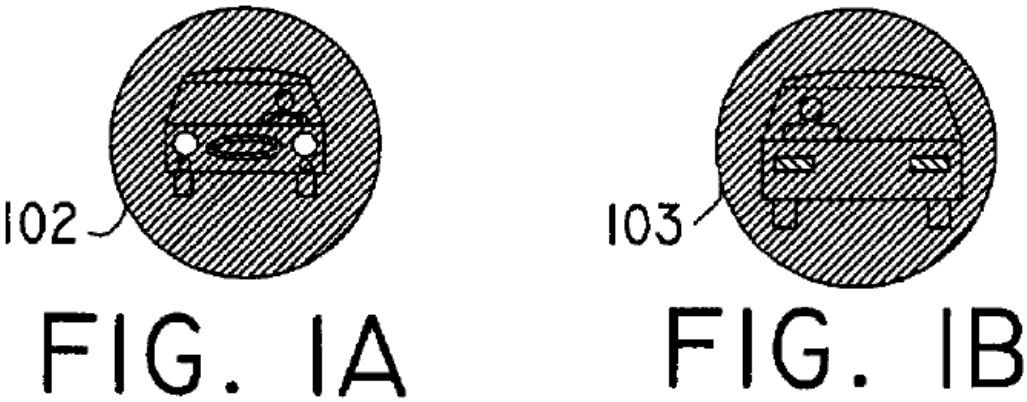

EX1005, FIGS. 1A-1B.

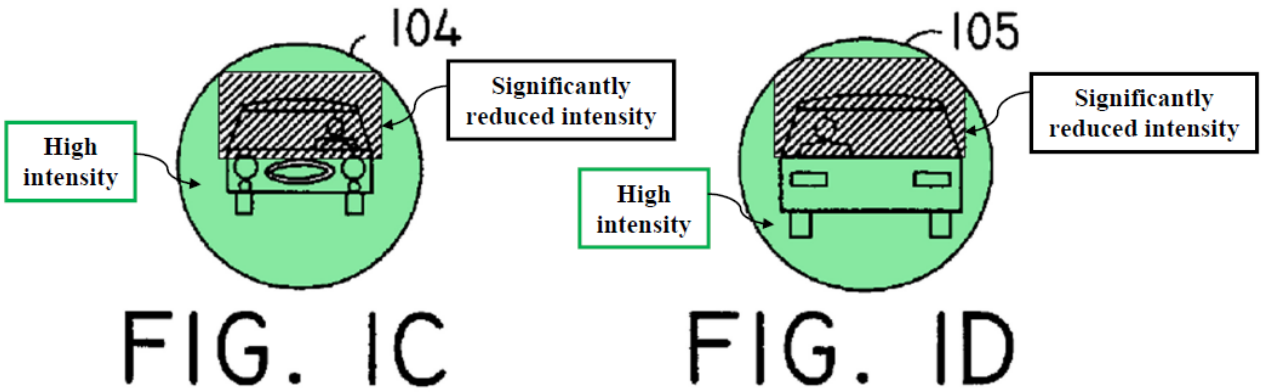

EX1005, FIGS. 1C-1D (annotated).

4. [26.3]

Beam discloses "*determining*, from the *detected presence* of the oncoming or followed vehicle…*the shape, size and location of an area to be darkened*…[and] *determining* which of said multiple rays of light must be *extinguished*." EX1005, 8:29-34, FIGS. 1, 1C-1D, 7, 1:5-18, 4:16-19, 6:14-19, Abstract, 5:65-6:4, 4:10-25, 2:59-3:3, 5:33-54; EX1003, ¶¶148-150.

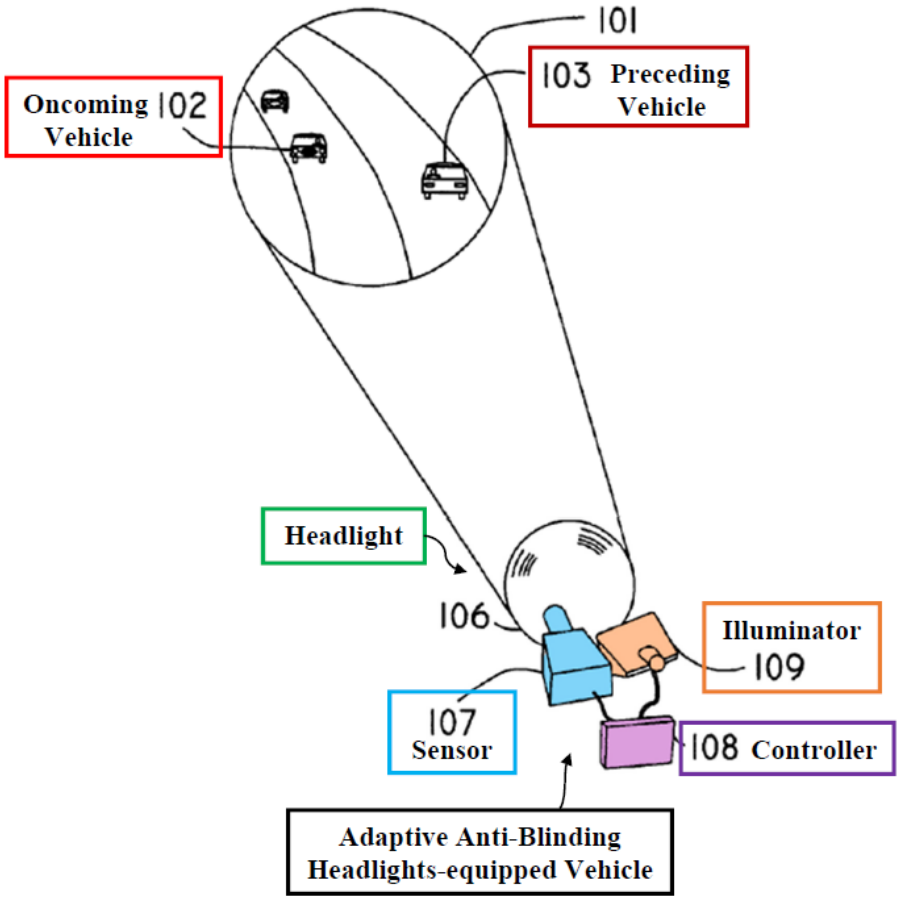

EX1005, FIG. 1 (annotated).

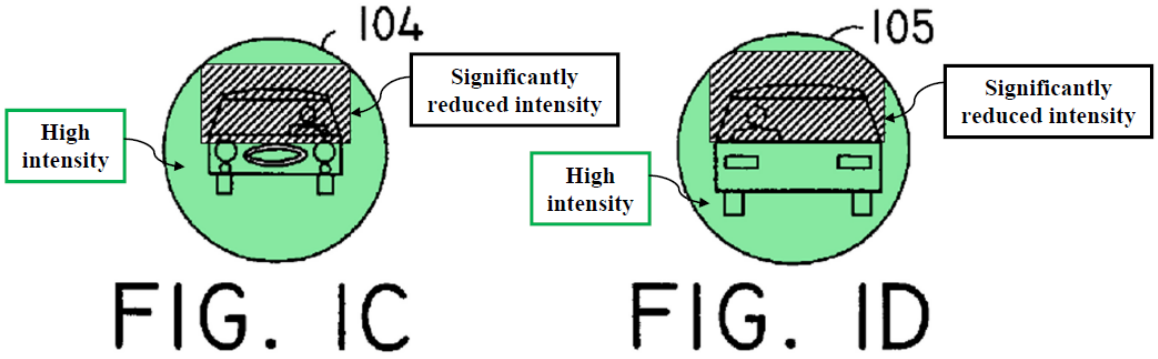

EX1005, FIGS. 1C-1D (annotated).

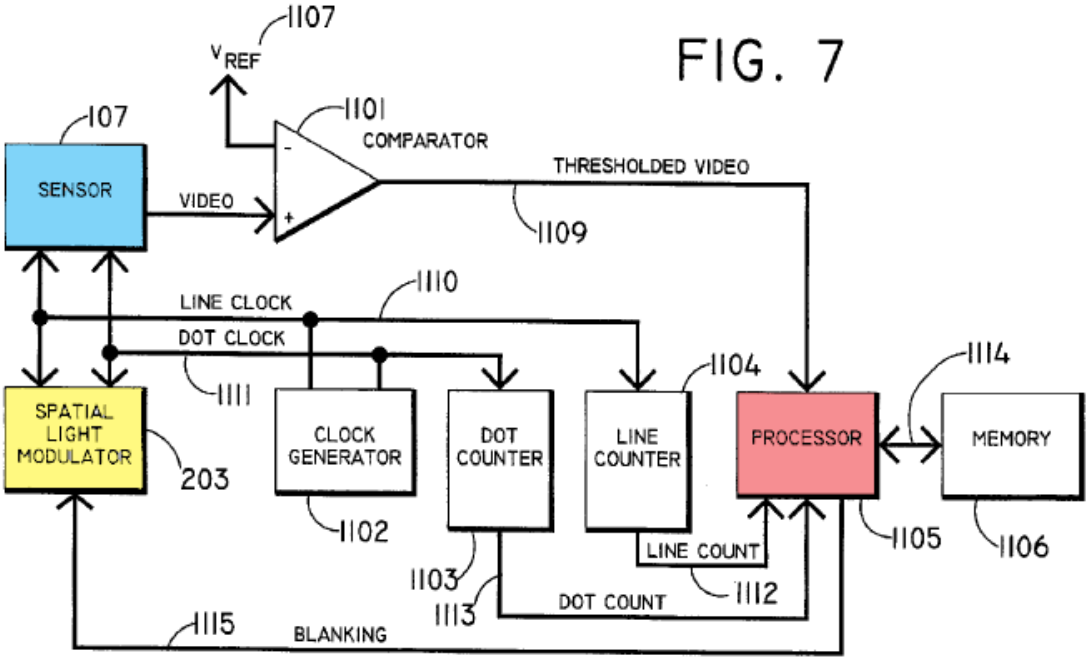

EX1005, FIG. 7 (annotated).

5. [26.4]

Beam discloses "*reformatting* the *pattern* of a beam…to *prevent* it from illuminating *certain areas*…thus eliminating the blinding of a driver in an *oncoming vehicle*." EX1005, 1:5-18, Abstract, 6:14-19, FIGS. 1, 1C-1D, 7, 5:65-6:4, 2:59-3:3, 4:10-25, 5:13-16, 5:33-54, 8:23-38; EX1003, ¶¶151-152. Thus, the processor processes the sensor data, identifies a vehicle, and determines an area to be dimmed within a subsection of the field-of-view (shaded area based on blanking). EX1005, 5:33-54, 6:12-27, FIGS. 1C-1D; EX1003, ¶¶152-153.

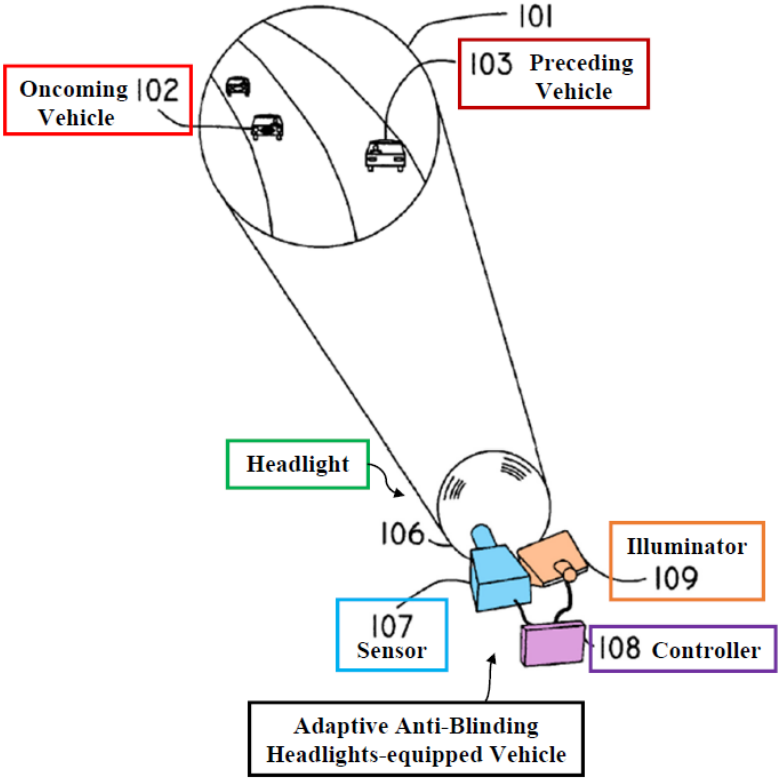

EX1005, FIG. 1 (annotated).

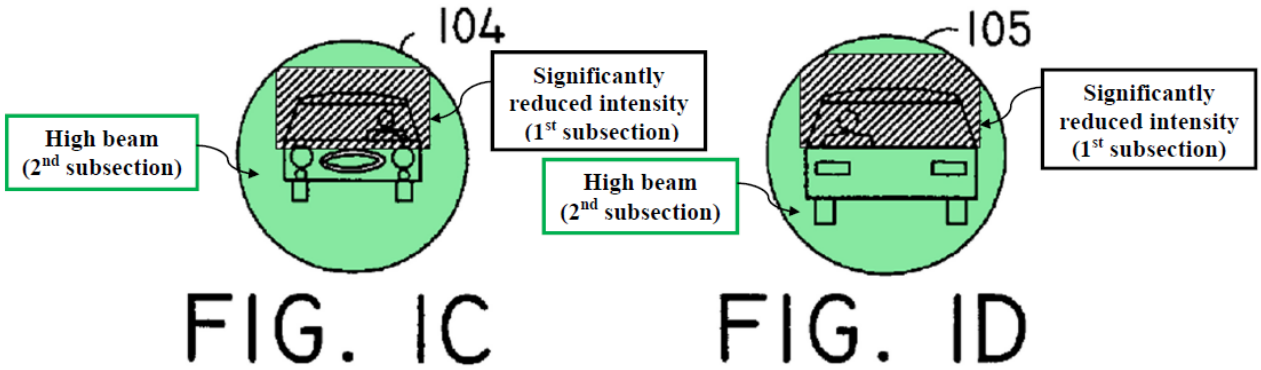

EX1005, FIGS. 1C-1D (annotated).

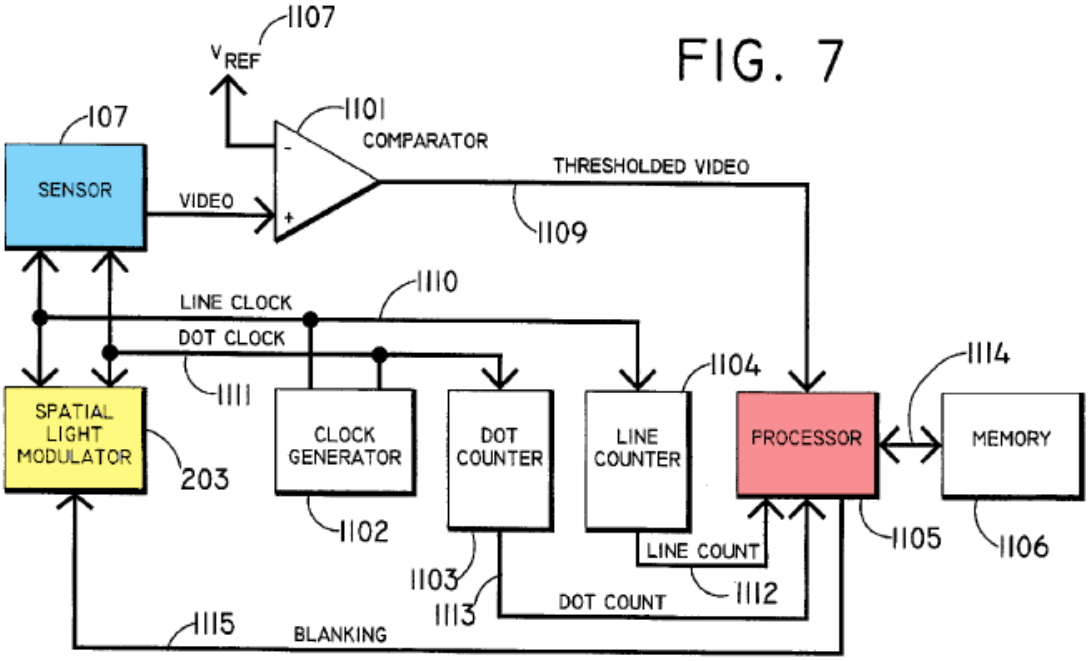

EX1005, FIG. 7 (annotated).

6. [26.5]

Beam discloses determining illumination for a second subsection (without the vehicle) by providing "*higher brightness beam* in the areas which *do not dazzle* the drivers ahead" and "the area…that would dazzle the driver will be darkened, *while maintaining f[u]ll intensity elsewhere*." EX1005, 3:19-24, 2:59-3:3, FIGS. 1, 1C-1D, 7, 6:40-44, 6:11-12, 1:5-18; EX1003, ¶¶154-156.

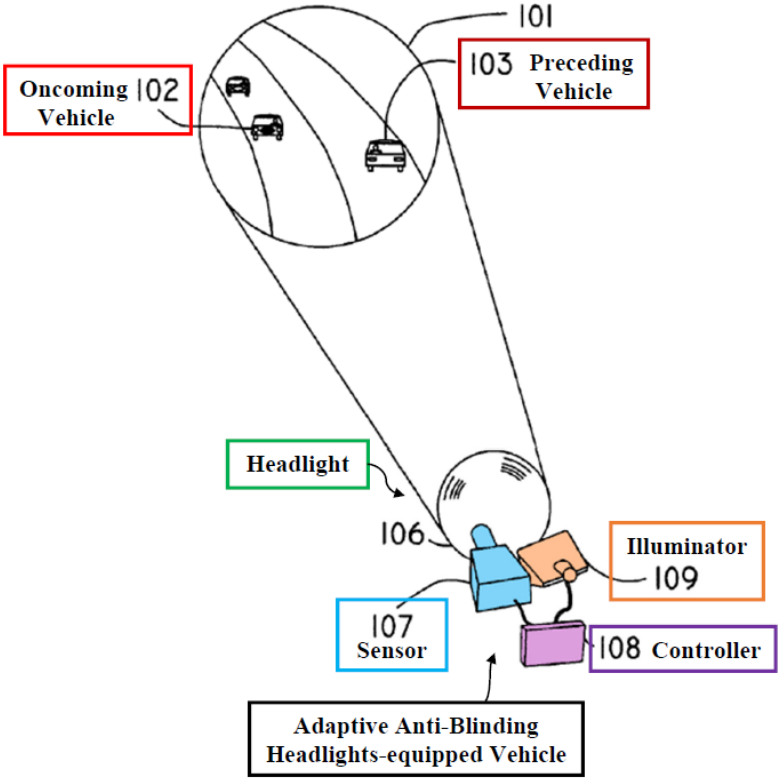

EX1005, FIG. 1 (annotated).

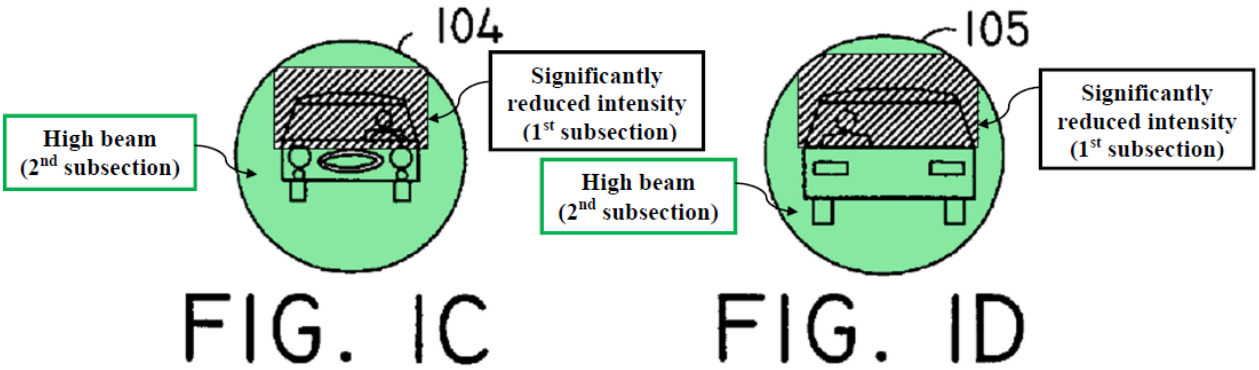

EX1005, FIGS. 1C-1D (annotated).

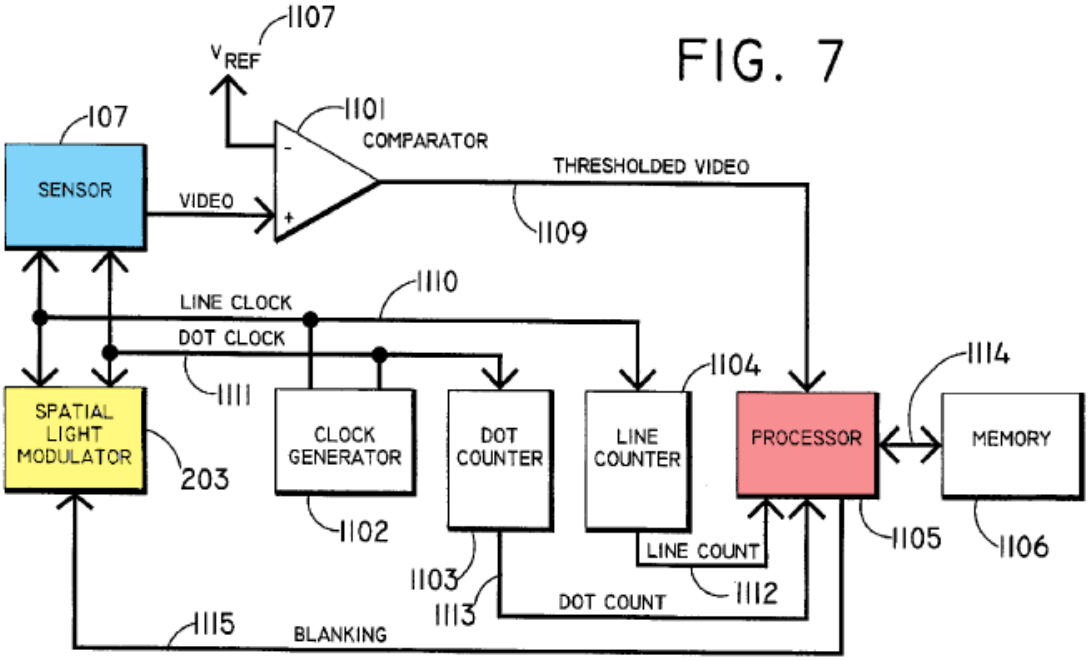

EX1005, FIG. 7 (annotated).

7. [26.6]

Beam discloses [26.6]. *Supra* Sections V/V.A/V.B.5/V.B.6; EX1003, ¶157. Beam's controller/processor determines a control strategy (e.g., feedback) to "cause the *intensity* of the selected microbeams to be reduced…illumination beam having a *high level of illumination*…with only selected portions…being *reduced*" to output illumination in the first subsection (with the vehicle) and the second subsection (without the vehicle). EX1005, 7:30-36, FIGS. 1, 1C-1D, 7, Abstract, 1:5-18, 2:59-3:24, 4:10-25, 5:13-6:4, 6:11-19, 6:40-48, 8:23-38; EX1003, ¶158. Beam also discloses "controller module uses the *sensor spatial data (video)*…to *control the Illuminator*" and "*processor*…outputs *blanking signals*…*command[ing] the appropriate pixels to be reduced*." EX1005, 5:34-54, FIGS. 1, 1C-1D, 7, 8:35-38,

5:61-65, 1:5-18, 6:30-33; EX1003, ¶158. Thus, Beam's processor determines a control strategy for controlling the direction and illumination of microbeams to "create an output headlight beam meeting the determined illumination requirements." EX1003, ¶158.

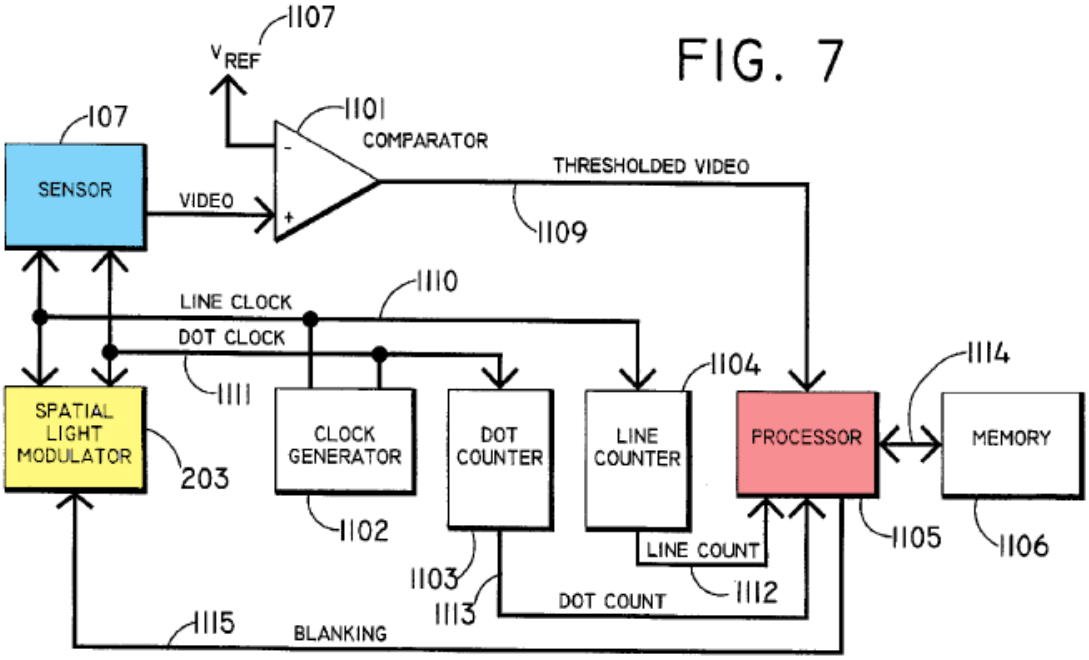

EX1005, FIG. 7 (annotated).

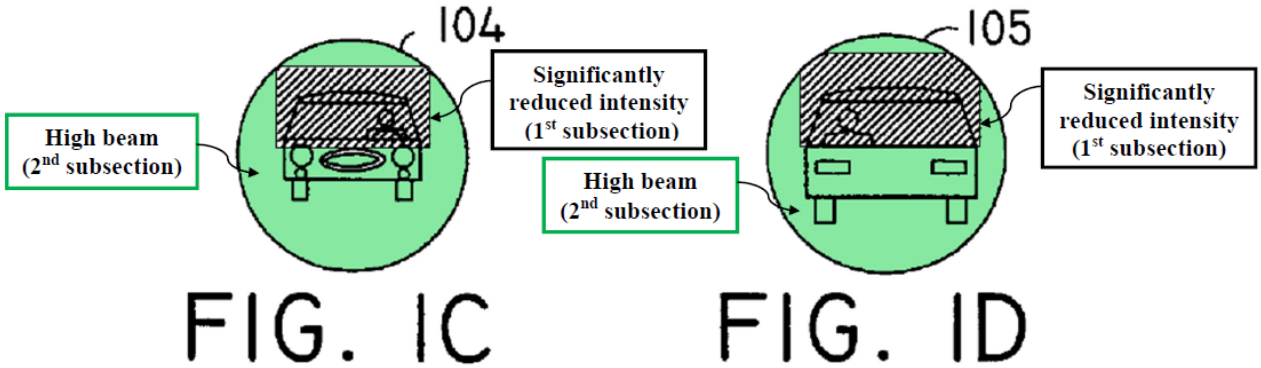

EX1005, FIGS. 1C-1D (annotated).

Each of Beam's microbeams is a directional "cluster" or "source," having its own independent *angular* position, that combines to form the headlamp beam; so Beam's lamp 202 and SLM 203 (or Beam's LEDs) form at least one directional light cluster/source to provide illumination in desired subsections. EX1005, 5:61-63, Abstract, FIGS. 1-2, 5, 8:4-17, 8:23-38, 7:25-29, 4:26-59, 5:3-21, FIGS. 2, 4-6; EX1003, ¶¶159, 161-162.

Beam also discloses clusters having at least two microbeams. EX1005, 4:26-59, 5:3-21, FIGS. 2, 4-6, 4:46-48; EX1003, ¶160.

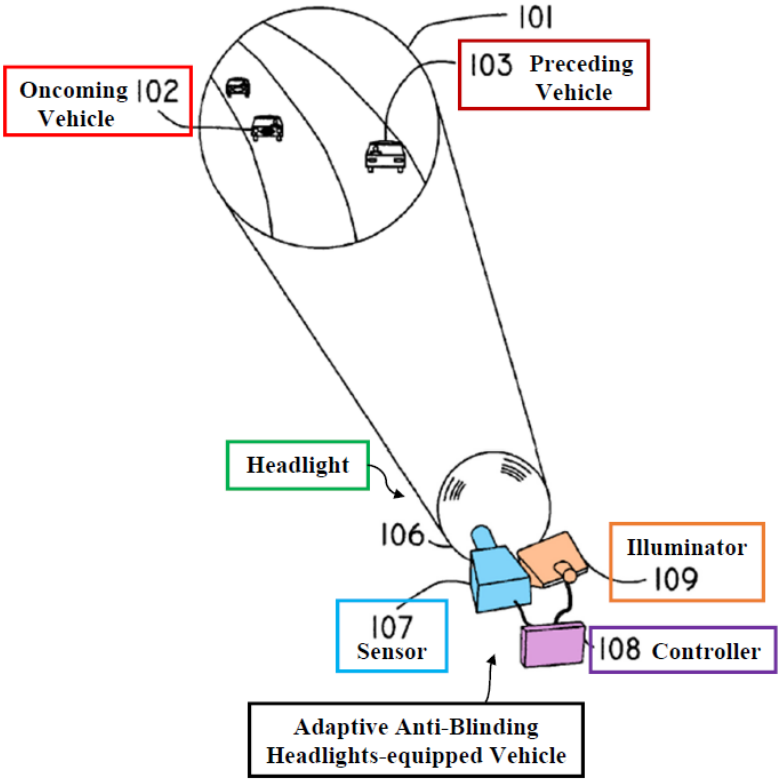

EX1005, FIG. 1 (annotated).

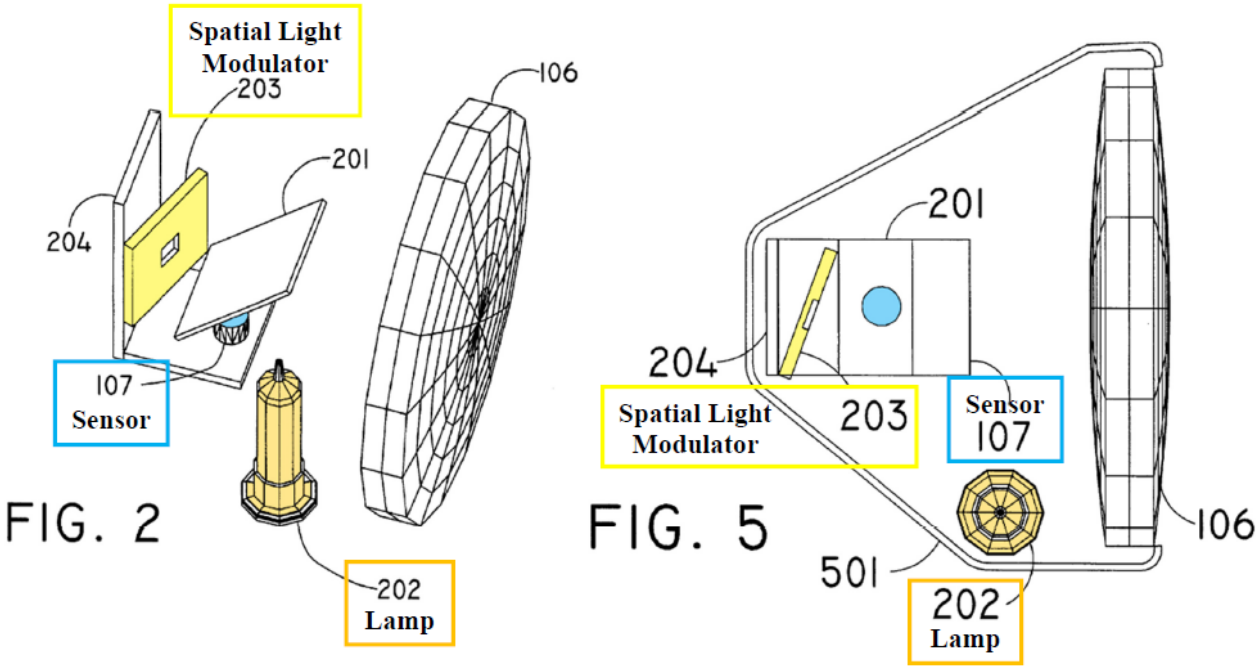

EX1005, FIGS. 2, 5 (annotated).

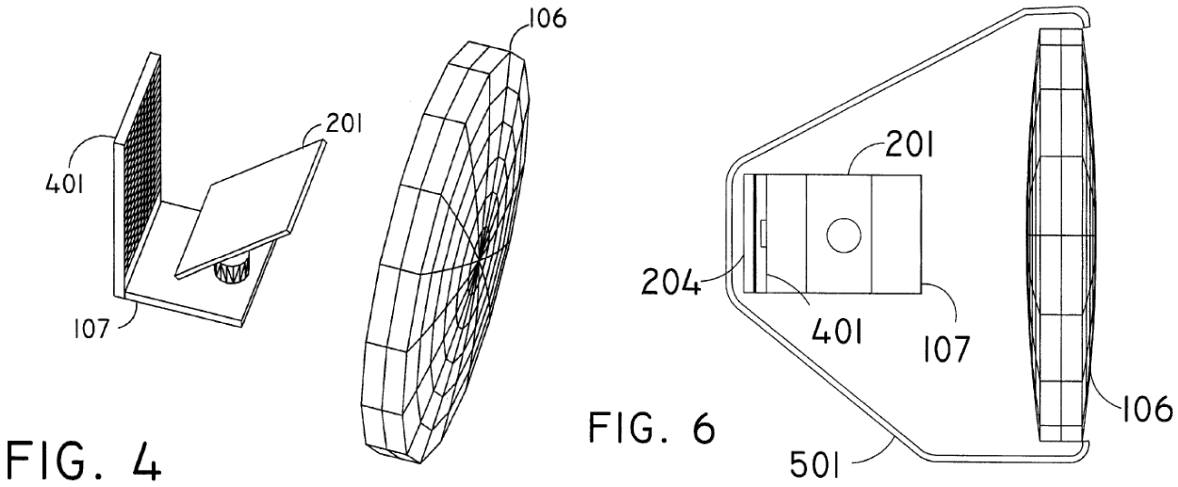

EX1005, FIGS. 4, 6.

Should Patent Owner argue, incorrectly, that Beam does not disclose [26.6], Beam-Thominet renders it obvious. EX1003, ¶¶163, 165-184. *Supra* Section V.A; EX1003, ¶¶121-138.

Thominet's headlights include directional, independently controllable semiconductor light sources 10 (e.g., LEDs) arranged on curved surface 12 to provide beam regions 22, 24, 26, 28 (directional light clusters) for different functions. EX1006, ¶¶17-18, 21-26, FIGS. 1-2; EX1003, ¶164.

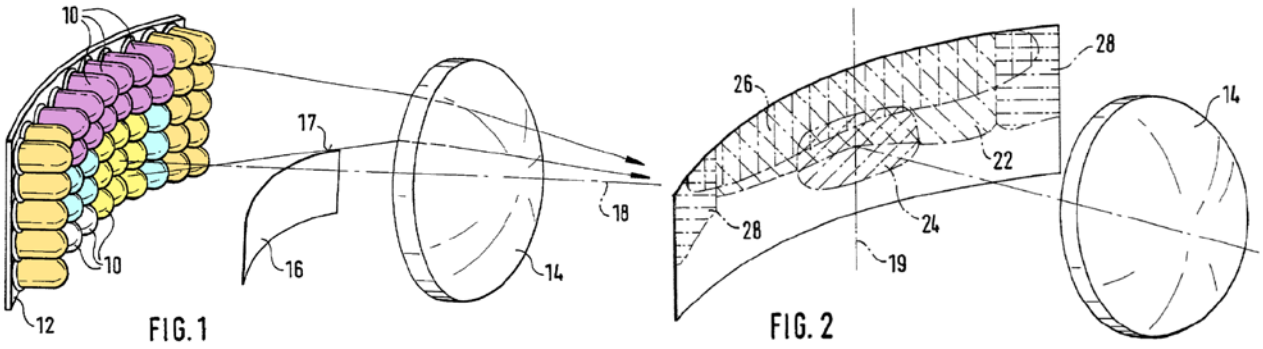

EX1006, FIGS. 1-2 (annotated).

8. [26.7]

Beam discloses illumination in non-shaded areas is "a *much higher brightness beam*" and "the area of the beam that would dazzle the driver will be darkened, *while maintaining f[u]ll intensity elsewhere*." EX1005, 3:19-24, 2:59-3:3, FIGS. 1, 1C-1D, 7, 6:40-44, 6:11-12, 1:5-18; EX1003, ¶¶185-186. This "provide[s] high beam illumination" in the second subsection. EX1003, ¶¶186-187.

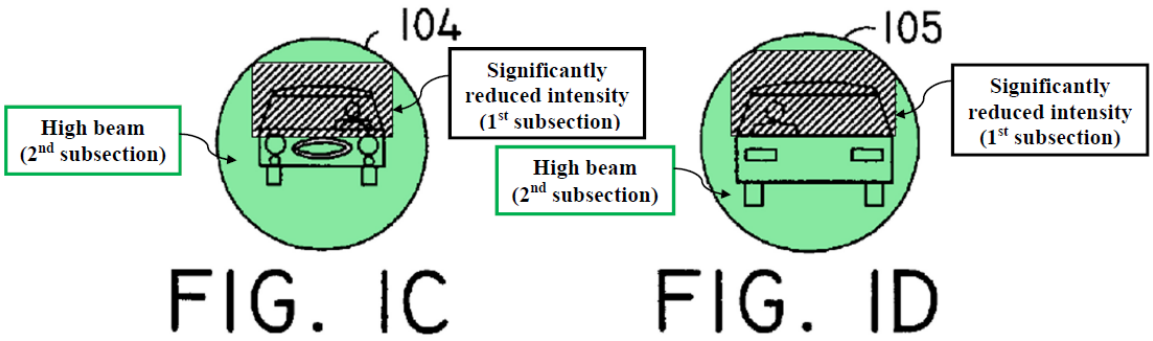

EX1005, FIGS. 1C-1D (annotated).

9. [26.8]

Beam discloses illumination in shaded areas is "*significantly less* than with current *low beams*" and emphasizes controlling to eliminate "*blinding* of a driver in an *oncoming vehicle*." EX1005, 1:5-18, FIGS. 1, 1C-1D, 7, 2:59-3:5, 4:23-29, 5:45-55, 5:65-6:4; EX1003, ¶¶188-189. This "mitigat[es] glaring" to other traffic. EX1003, ¶¶189-190.

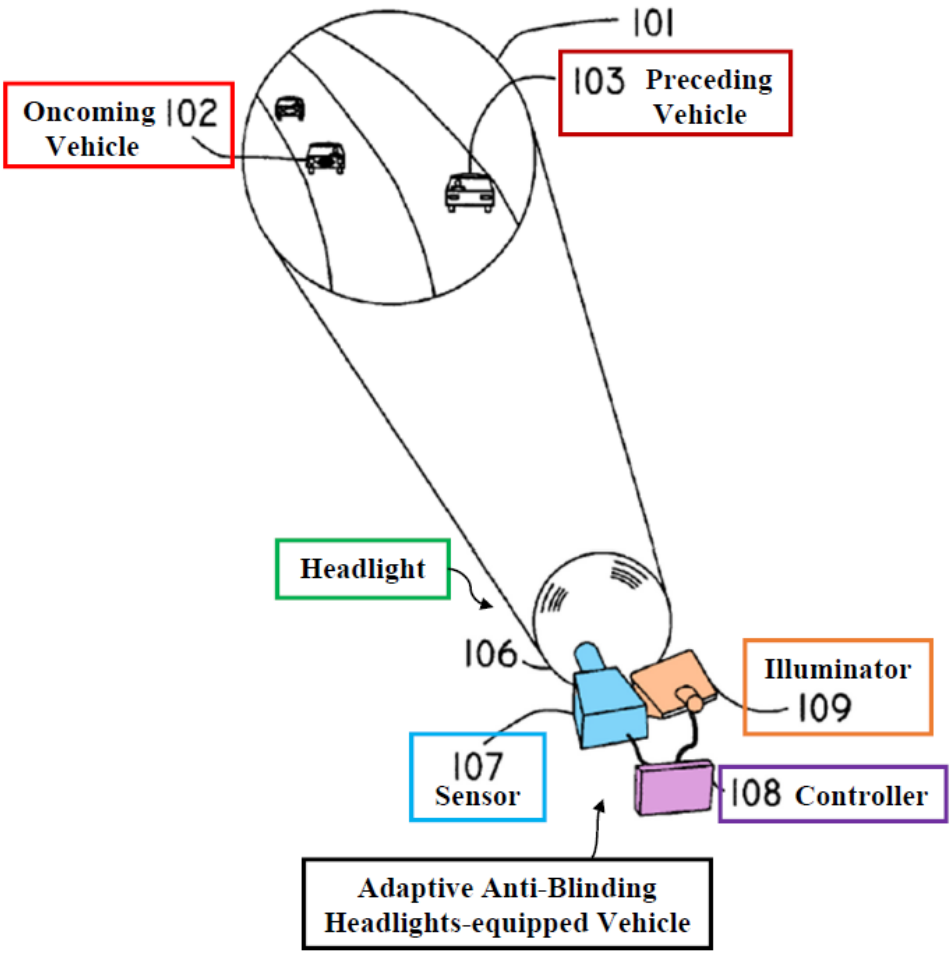

EX1005, FIG. 1 (annotated).

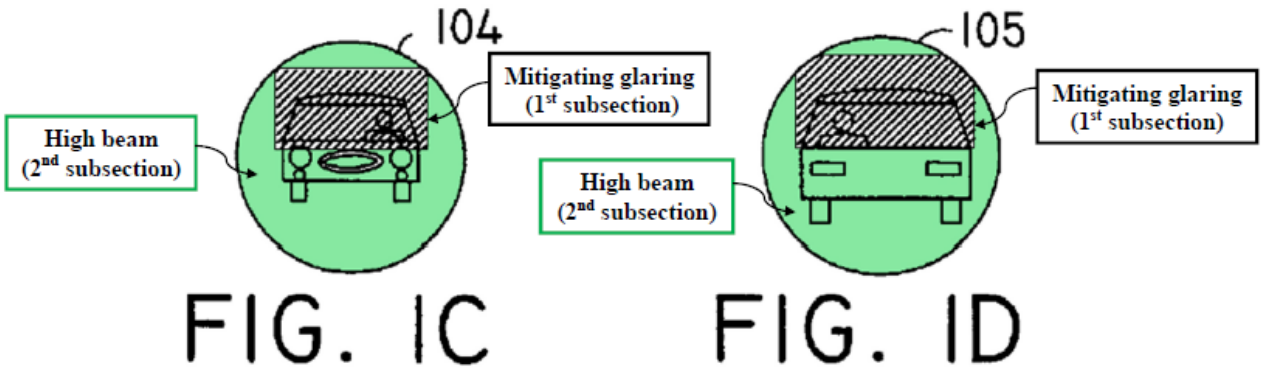

EX1005, FIGS. 1C-1D (annotated).

10. [26.9]

Beam discloses "controller module uses the *sensor spatial data (video)*…to *control the Illuminator*" and "*processor*…outputs *blanking signals*…*command[ing] the appropriate pixels to be reduced*." EX1005, 5:34-54, FIGS. 1, 1C-1D, 7, 8:35-38, 5:61-65, 1:5-18, 6:30-33; EX1003, ¶191. Beam/Beam-Thominet discloses "directional light clusters." *Supra* Section V.B.7; EX1003, ¶¶157-184. Thus, Beam's processor sends control signals (blanking or non-blanking) to illuminator (SLM 203) to reduce or not reduce microbeams in the array to "implement the control strategy" and "operate the light-clusters." EX1005, 5:34-54, FIGS. 1, 1C-1D, 7; EX1003, ¶¶191-192.

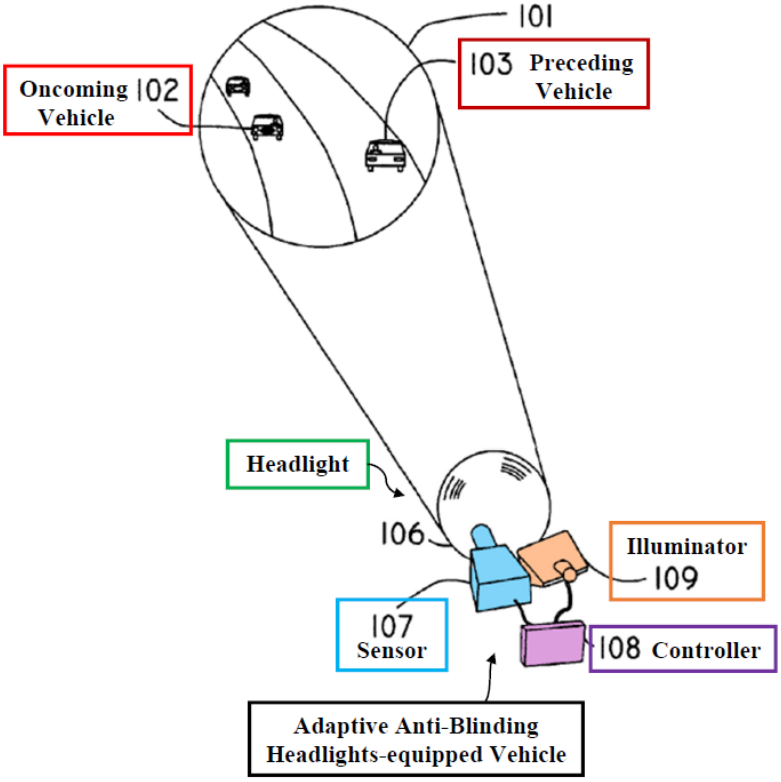

EX1005, FIG. 1 (annotated).

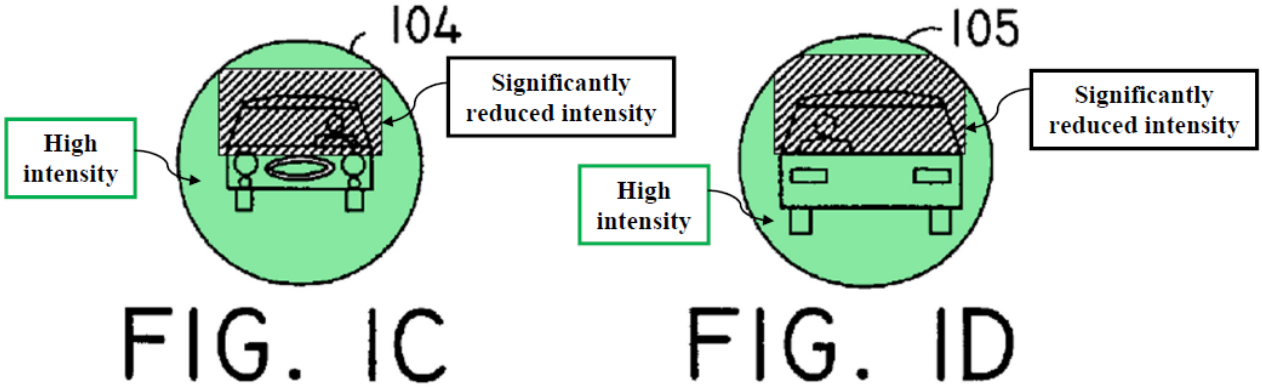

EX1005, FIGS. 1C-1D (annotated).

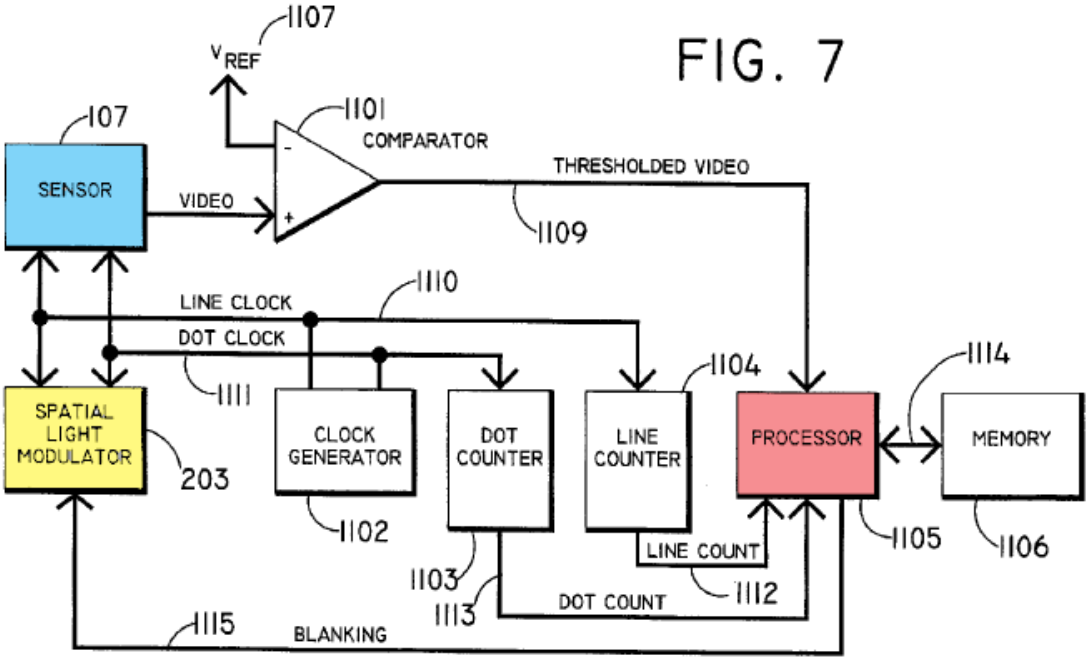

EX1005, FIG. 7 (control circuitry) (annotated).

11. [26.10]

[26.10] implements [26.9]. Beam's "*processor*…outputs *blanking signals*…*command[ing] the appropriate pixels to be reduced*." EX1005, 5:34-54, FIGS. 1, 1C-1D, 7, 8:35-38, 5:61-65, 1:5-18, 6:30-33; *supra* Section V.B.10; EX1003, ¶¶191, 193. Thus, Beam's illuminator (via SLM 203) "control[s] the light clusters…to collectively emit the headlight beam." EX1003, ¶¶194-195.

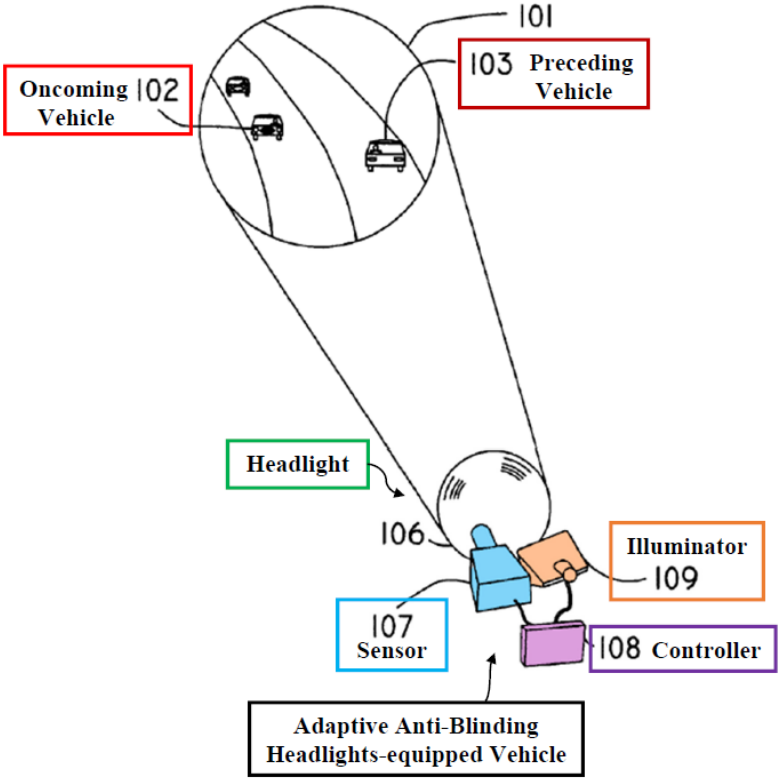

EX1005, FIG. 1 (annotated).

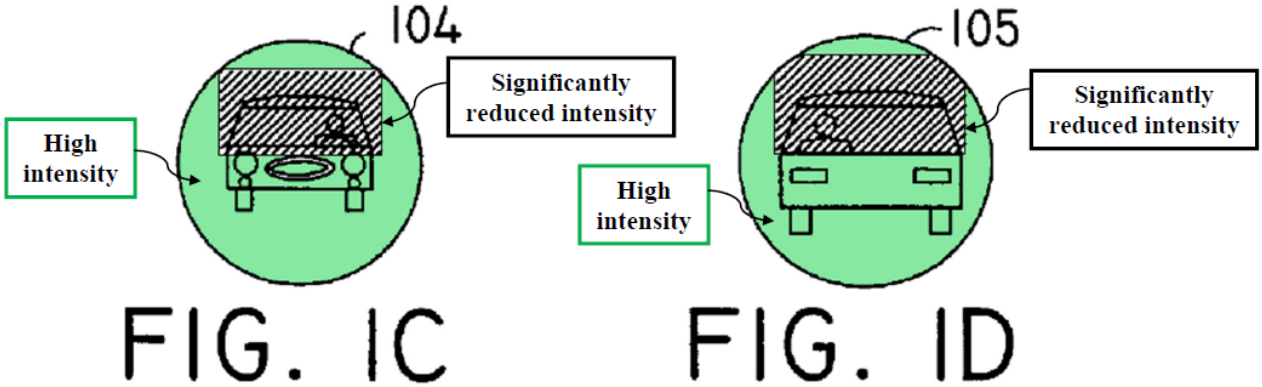

EX1005, FIGS. 1C-1D (annotated).

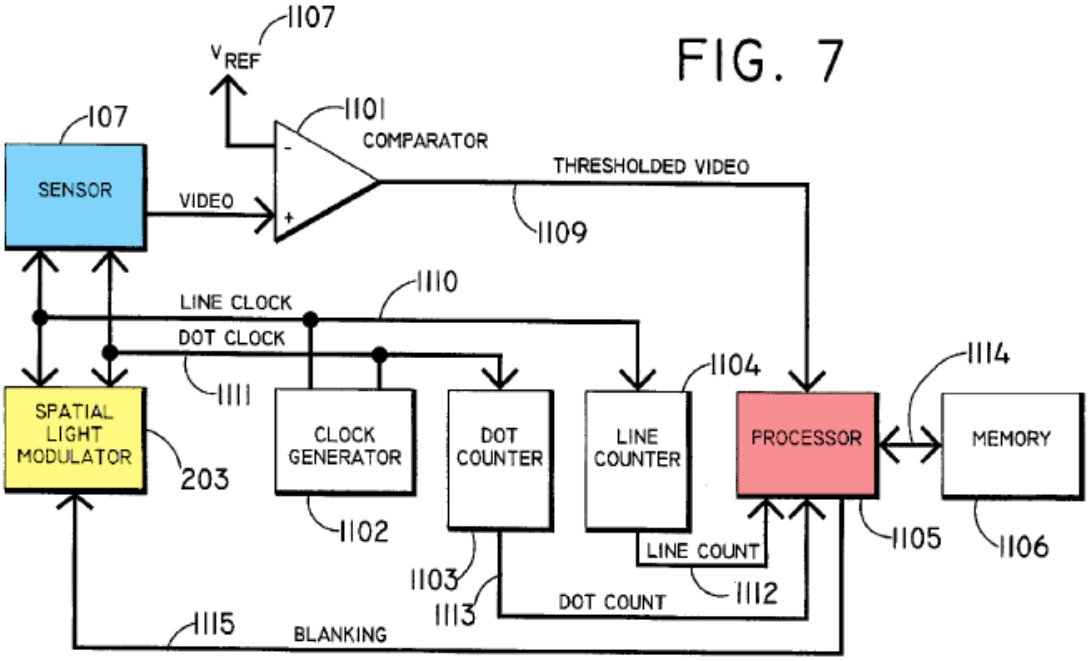

EX1005, FIG. 7 (control circuitry) (annotated).

C. Claim 27

Beam discloses "determining illumination requirements." *Supra* Section V.B.4. Beam bases this on modes such as "*bright high beams*" and "*high beam headlights*," and operating "at *maximum intensity* at all times." EX1005, 6:11-56, 3:29-36; EX1003, ¶196. Thus, Beam discloses multiple "headlight modes." EX1003, ¶¶196-197.

D. Claim 30

Beam's "[s]election of the particular microbeams…is performed *continuously* and *dynamically*." EX1005, 5:61-6:4, FIGS. 1, 1C-1D, 6:19-27, 5:34-36, 4:10-25; EX1003, ¶¶198-199.

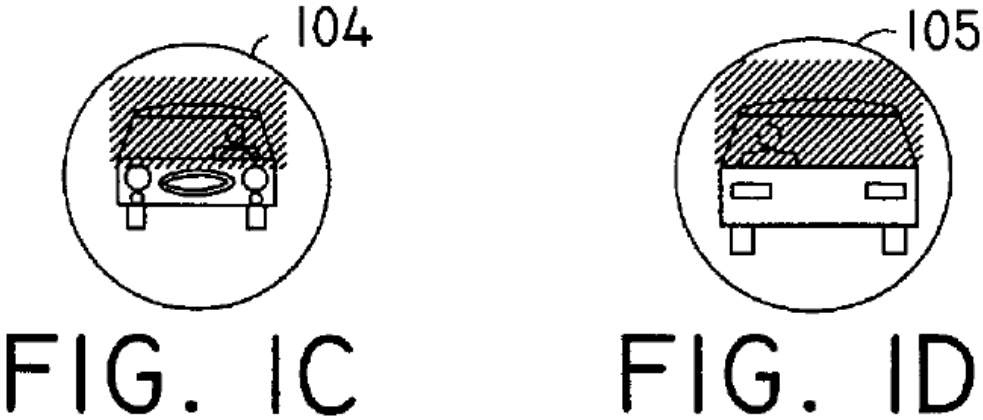

EX1005, FIGS. 1C-1D.

E. Claim 31

Beam discloses "[a]n *override*…to *activate* the high beams to signal another driver." EX1005, 3:31-34, 6:28-30, 1:26-34; EX1003, ¶200. A POSA would have understood that Beam discloses "an override switch" because "a *manual* override" includes a manual or digital actuator (e.g., a switch) to "activate" the override. EX1003, ¶200.

Further, a "switch" was well-known and thus would have been an obvious actuator for Beam's override and a simple substitution for one known element for another. EX1007, 48:12-15; EX1010, 6:34-7:3; EX1003, ¶¶201-203.

VI. GROUND 2: THE COMBINATION OF BEAM, THOMINET, AND STAM RENDERS OBVIOUS CLAIM 65.

Beam/Beam-Thominet discloses every feature in claim 65 as explained below. To avoid doubt, Beam-Thominet is combined with Stam, for [65.6] and [65.8]—outputting light above or below a predefined illuminance. EX1003, ¶204.

Beam discloses a "*default* illumination level will be the equivalent of today's *low beams*." EX1005, 6:30-33. Thus, Beam's system includes a "predefined" illuminance—a "low beam" illuminance. EX1003, ¶¶205-206. Further, illumination in shaded areas is "*significantly less* than with current *low beams*" (significantly reduced intensity in shaded area is *below* Beam's predefined *low beam* illuminance: <u>shaded illuminance < low beam illuminance</u>); and illumination in non-shaded areas is "at *maximum* intensity" and "like having bright *high beams*" (high intensity in non-shaded area is *above* Beam's predefined *low beam* illuminance: <u>non-shaded illuminance > low beam illuminance</u>). EX1005, 6:30-33, 2:59-3:3, 6:11-12, 6:40-44, FIGS. 1, 1C-1D; EX1003, ¶207.

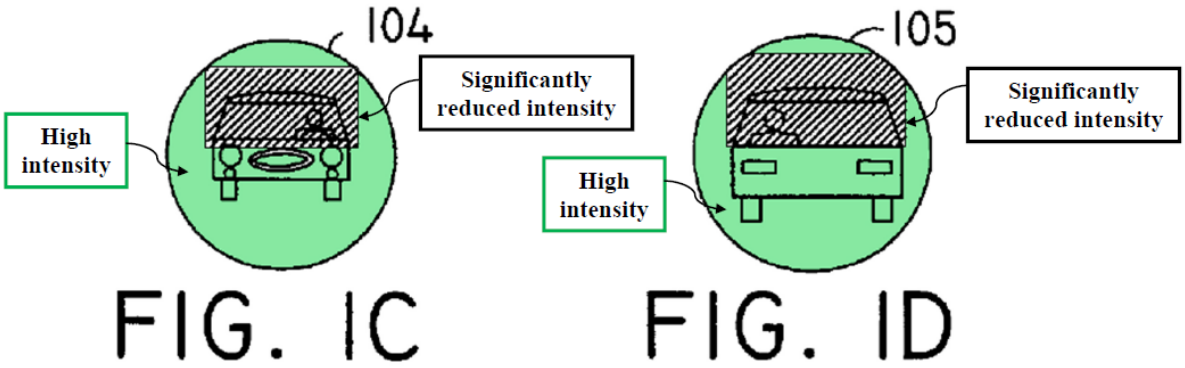

EX1005, FIGS. 1C-1D (annotated).

Thus, Beam discloses a "predefined" (low beam) illuminance and outputting illumination "below…[the] predefined illuminance" and "above…[the] predefined illuminance" (<u>shaded < low beam < non-shaded</u>) recited in [65.6] and [65.8]. EX1003, ¶208.

If Patent Owner argues, incorrectly, that Beam does not disclose [65.6] and [65.8], Stam does. *Id*., ¶¶209-210.

A. A POSA would have been motivated to combine Beam, Thominet, and Stam with a reasonable expectation of success.

Stam provides a specific "predefined illuminance" value based on a dimmed illuminance to reduce glare. EX1003, ¶¶90-94, 211. It would have been obvious to a POSA designing an adaptive headlamp to implement Stam's predefined (dimmed) illuminance value in Beam-Thominet's system, to further control intensity of Beam's directional microbeams to prevent glare. *Id*., ¶211; EX1005, 3:8-14, 3:37-44, 5:33-54, 7:1-13.

Stam emphasizes safety. EX1003, ¶212; EX1005, 3:8-45, 5:33-54, 6:53-7:13; EX1007, 1:14-31, 1:25-27. In fact, Stam explains there are laws and regulations governing the amount of glare experienced by drivers. EX1007, 1:14-31, 9:12-10:8, Abstract, 58:11-33; EX1003, ¶92, 94, 212.

First, including a predefined value for Beam-Thominet's controller—Stam's *technique* would have further enhanced Beam-Thominet's system by outputting illuminance *relative to* the predefined value (below or above), preventing glare to other vehicles. EX1003, ¶213. *Second*, a POSA would have sought to incorporate this *known feature* of Stam (a predefined dimmed illuminance, *see* EX1007, Abstract, 1:14-31, 9:12-10:8) into Beam's system (with controller 108 and/or

illuminator 109). EX1003, ¶213. This would have, provided a specific "predefined" illuminance, below and above which to adjust illumination for desired areas. *Id.*

A POSA would have understood that a predefined value for Beam-Thominet's controller/illuminator based on Stam's predefined dimmed illuminance (0.1 fc within 700 ft), would have provided greater illumination control *referenced to* a predefined value to prevent glare and increase illumination to other areas. *Id.*, ¶214. This would have merely been applying Stam's *known technique* (a predefined dimmed illuminance) to Beam-Thominet's similar, known device (dynamic headlamp with controllable beams), in the same way. *Id.*; *KSR*, 550 U.S. at 417. Stam's known technique is fully described along with its benefits (improved safety); thus, a POSA would have readily applied it to similar systems, such as Beam-Thominet's, in the same way. EX1003, ¶214; *KSR*, 550 U.S. at 419-421.

Additionally, or alternatively, this modification would have been simply combining prior-art elements (Beam-Thominet's adaptive, direction-controllable headlamps and Stam's predefined dimmed illuminance) according to known methods (disclosed in Beam-Thominet and Stam) to yield predictable results (reduced glare, improving safety). EX1003, ¶215; *KSR*, 550 U.S. at 415-416.

A POSA would have had a reasonable expectation of success combining Beam-Thominet and Stam, for example, by simply storing a specific dimmed illuminance value in memory of Beam-Thominet's controller/processor to output

Beam's headlamp illumination below and above that value for respective illumination areas. EX1003, ¶216. This would have been routine and well within a POSA's skill due to the similarities in Beam-Thominet's and Stam's adaptive systems—their common components were well-known and there would have been no limitations for a POSA to make such a modification. *Id.*, ¶¶216-217.

B. Independent Claim 65[5]

1. [65.P]

[65.P] is identical to [26.P]. *Supra* Section V.B.1; EX1003, ¶¶218-219.

2. [65.1]

The features of [65.1] are included in [26.1]. *Supra* Section V.B.2; EX1005, 5:34-36 ("*spatial scene data* from sensor 107"); EX1003, ¶¶220-222.

3. [65.2]

The features of [65.2] are included in [26.2]. *Supra* Section V.B.3; EX1005, 4:10-25 ("headlights of an oncoming vehicle and/or taillights of a vehicle ahead are…detected by a sensor 107"); EX1003, ¶¶223-225.

---

[5] Claim 65 and claim 26 recite many identical elements or elements that are so technically similar that corresponding elements are patentably indistinct, even where the claim elements may be worded slightly different. (*See* Appendix A.) Patentably indistinct elements are elements for which the same prior art disclosure is applicable; substantive differences are explained, if needed. EX1003, ¶218.

4. [65.3]

The features of [65.3] are included in [26.4]. *Supra* Section V.B.5; EX1005, 1:5-18 ("*reformatting* the *pattern* of a beam…to *prevent* it from illuminating *certain areas*…eliminating the blinding of a driver in an *oncoming vehicle*"); EX1003, ¶¶226-228.

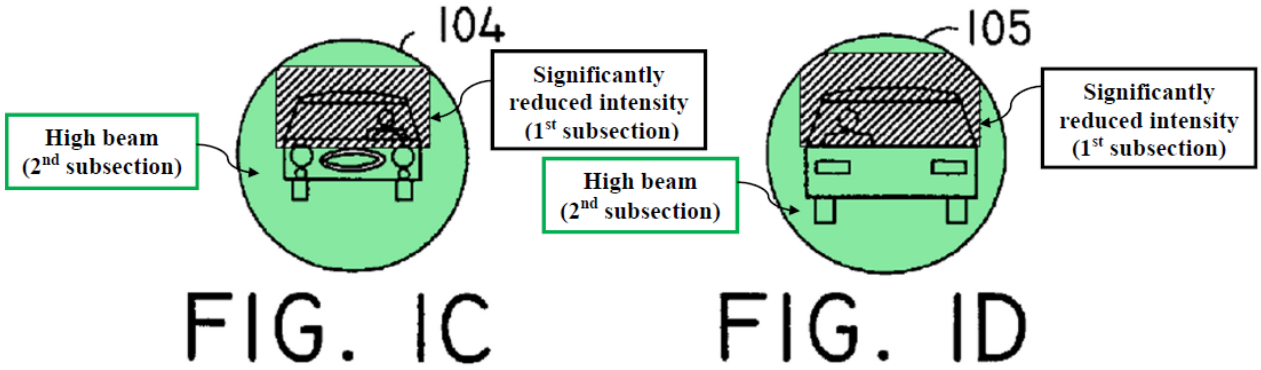

EX1005, FIGS. 1C-1D (annotated).

5. [65.4]

The features of [65.4] are included in [26.5]. *Supra* Section V.B.6; EX1005, 3:19-24, FIGS. 1C-1D; EX1003, ¶¶229-232.

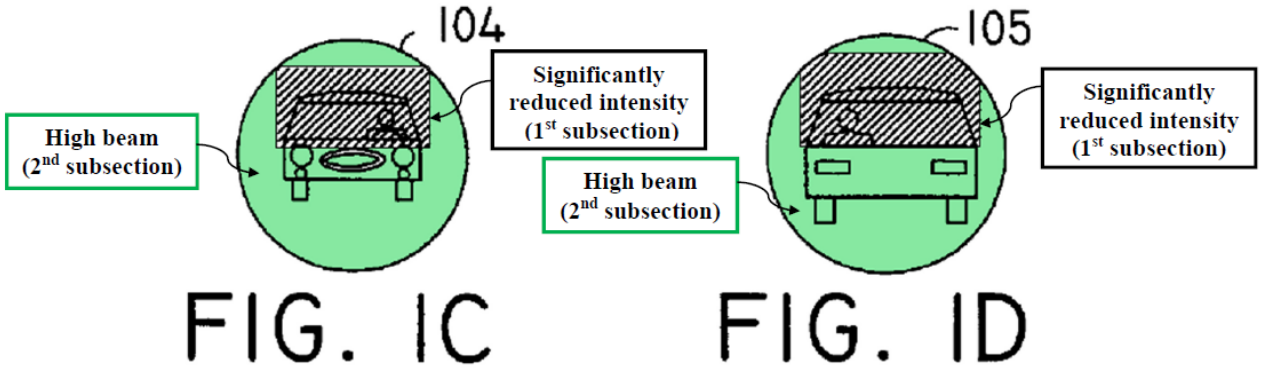

EX1005, FIGS. 1C-1D (annotated).

6. [65.5]

Beam discloses "*reformatting* the *pattern*…to *prevent* it from illuminating *certain areas*…thus *eliminating the blinding* of a driver in an *oncoming vehicle*" so that illumination in shaded areas is "*significantly less* than with current *low beams*." EX1005, 1:5-18, Abstract, FIGS. 1, 1C-1D, 7, 2:59-3:3, 4:10-25, 5:13-15, 5:46-54, 8:23-38, 5:33-54, 5:65-6:4; EX1003, ¶¶233-234. Thus, Beam's processor "determin[es] an illumination level" for the first subsection (shaded area). EX1003, ¶¶234-235.

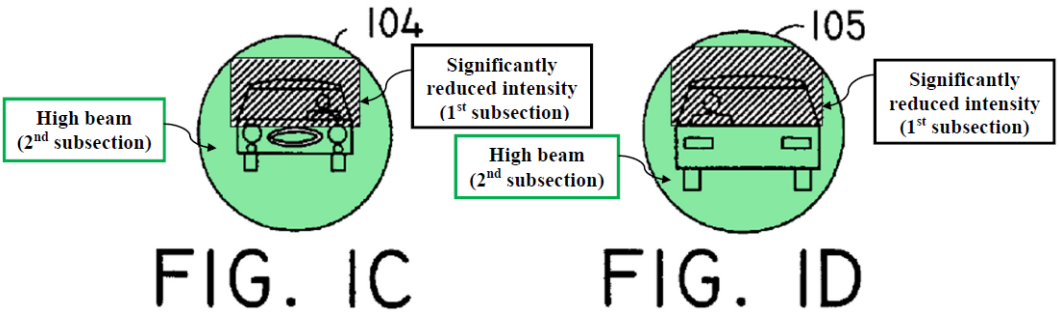

EX1005, FIGS. 1C-1D (annotated).

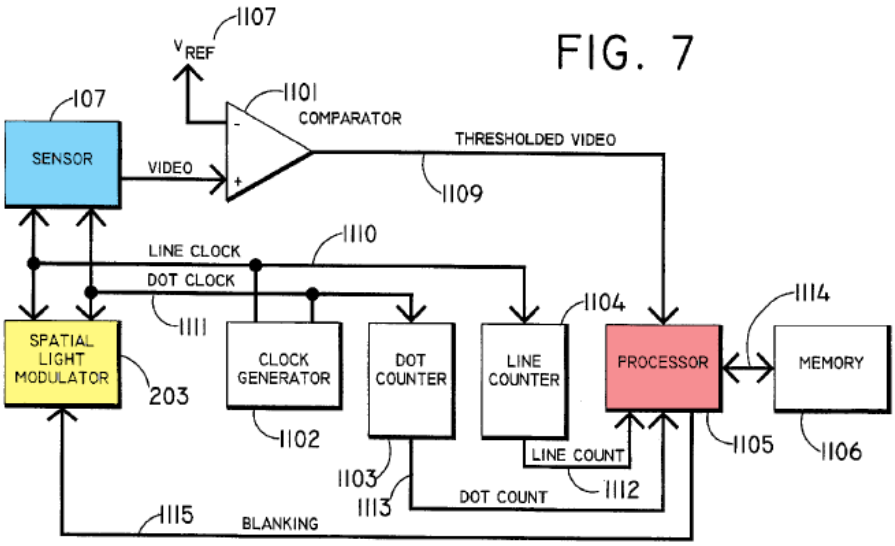

EX1005, FIG. 7 (annotated).

7. [65.6]

Beam discloses [65.6]. *Supra* Section VI; EX1003, ¶¶236-239; EX1005, 6:30-33, 1:5-18, 2:59-3:3, Abstract, 4:10-25, 5:13-15, 5:33-54, 5:65-6:2, 8:23-38, FIGS. 1, 1C-1D, 7.

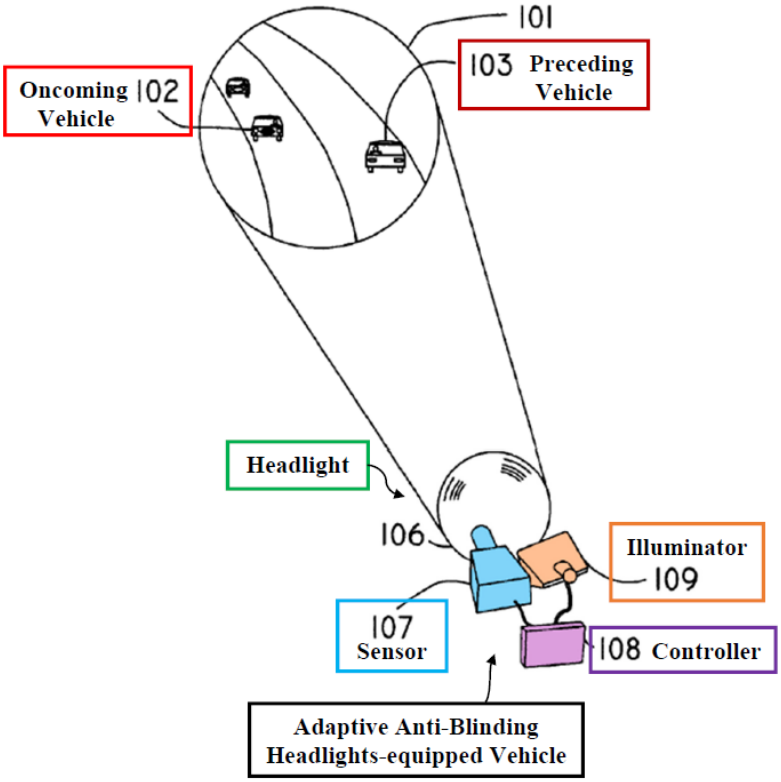

EX1005, FIG. 1 (annotated).

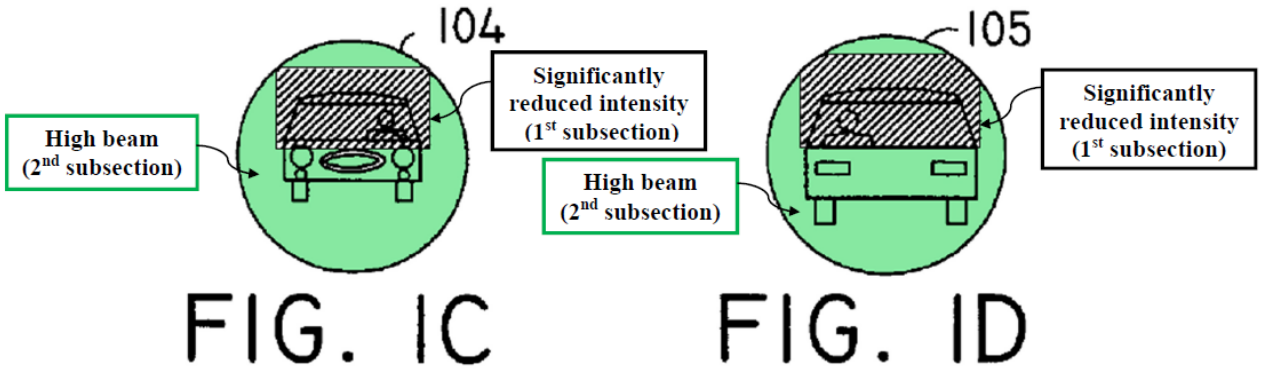

EX1005, FIGS. 1C-1D (annotated).

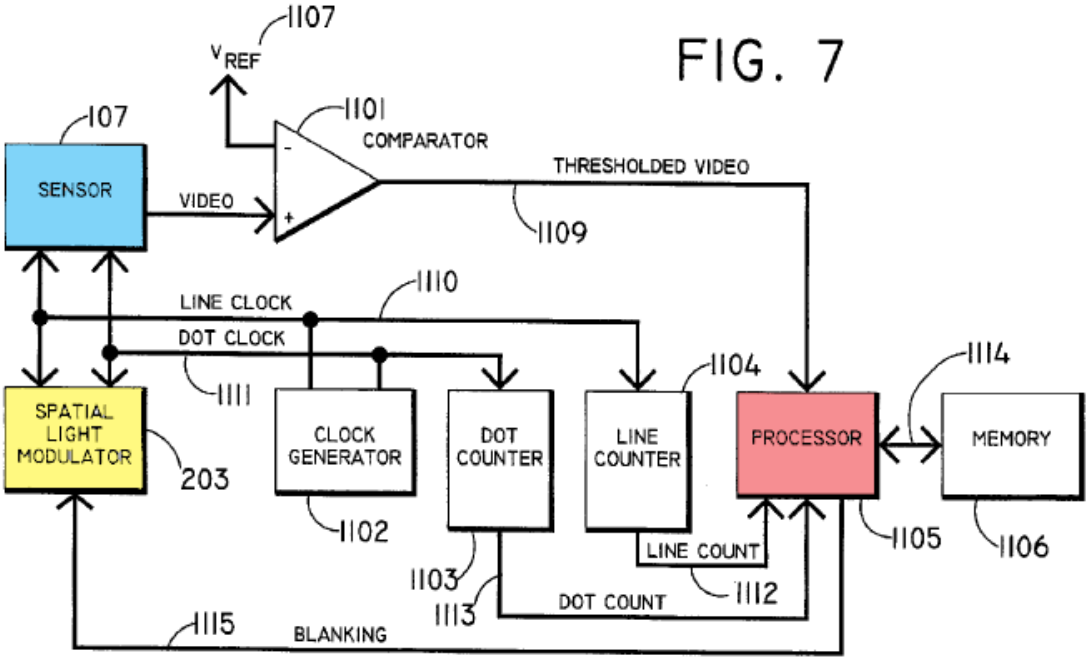

EX1005, FIG. 7 (annotated).

Should Patent Owner argue, incorrectly, that Beam-Thominet does not disclose [65.6], Stam does. EX1003, ¶240.

Stam discloses limits "to *avoid* an illuminance of *0.1 foot candles (fc)* incident on another vehicle…high beam headlamps should be *dimmed within 700 feet* of another vehicle." EX1007, 1:27-32, Abstract, 1:14-31, 9:12-10:8, FIG. 11; EX1003, ¶241. Thus, Stam defines a "predefined" (dimmed) illuminance value, corresponding to the "predefined illuminance." EX1003, ¶¶241-244.

Thus, the combined Beam-Thominet-Stam system would illuminate the first subsection (e.g., shaded area) "below a predefined illuminance." *Supra* Section VI.A; EX1003, ¶¶245-256.

8. [65.7]

Beam discloses "*reformatting* the *pattern*…to *prevent* it from illuminating *certain areas*…while continuing to provide *intense forward illumination*" so that illumination in non-shaded areas is "a *much higher brightness beam*" and "the area of the beam that would dazzle the driver will be darkened, *while maintaining f[u]ll intensity elsewhere*." EX1005, 1:5-18, 3:19-24, Abstract, 2:59-3:3, FIGS. 1, 1C-1D, 7, 6:40-44, 6:11-12, 1:5-18, 7:30-36, 8:23-38, 5:33-54; EX1003, ¶¶257-258. Thus, Beam's processor "determin[es] an illumination level" for the second subsection (non-shaded area). EX1003, ¶¶258-259.

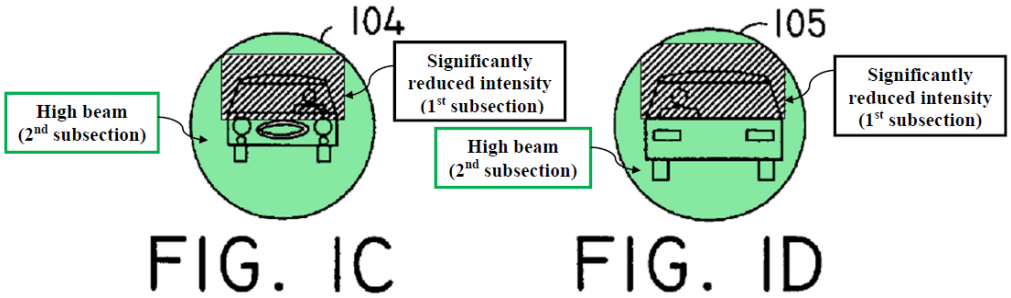

EX1005, FIGS. 1C-1D (annotated).

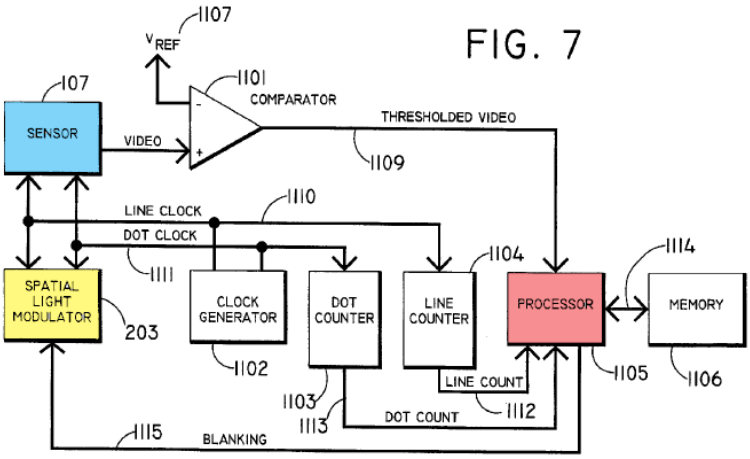

EX1005, FIG. 7 (annotated).

9. [65.8]

Beam discloses [65.8]. *Supra* Section VI; EX1003, ¶¶260-262; EX1005, 6:11-55, 2:59-3:3, FIGS. 1, 1C-1D, 7.

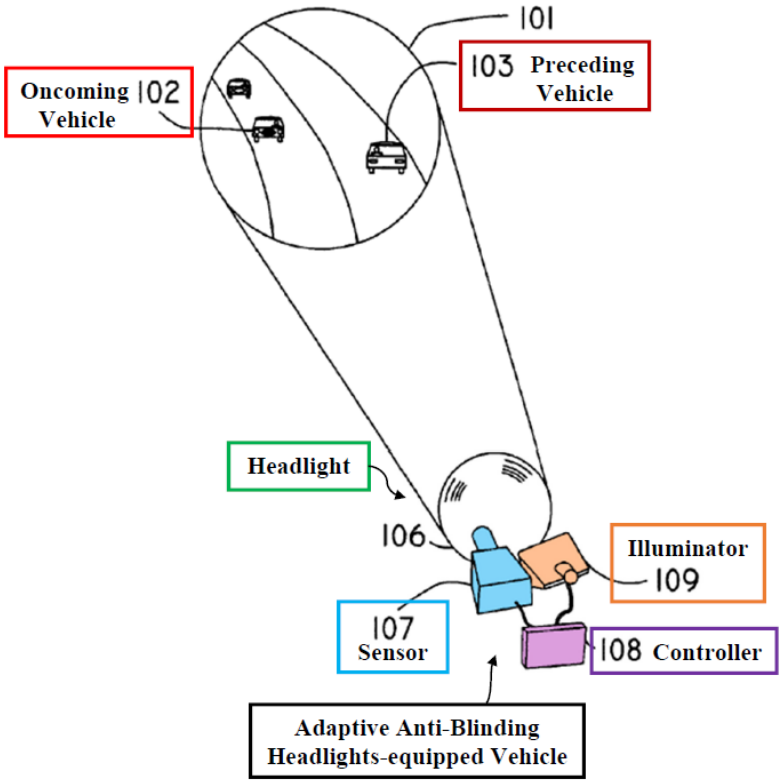

EX1005, FIG. 1 (annotated).

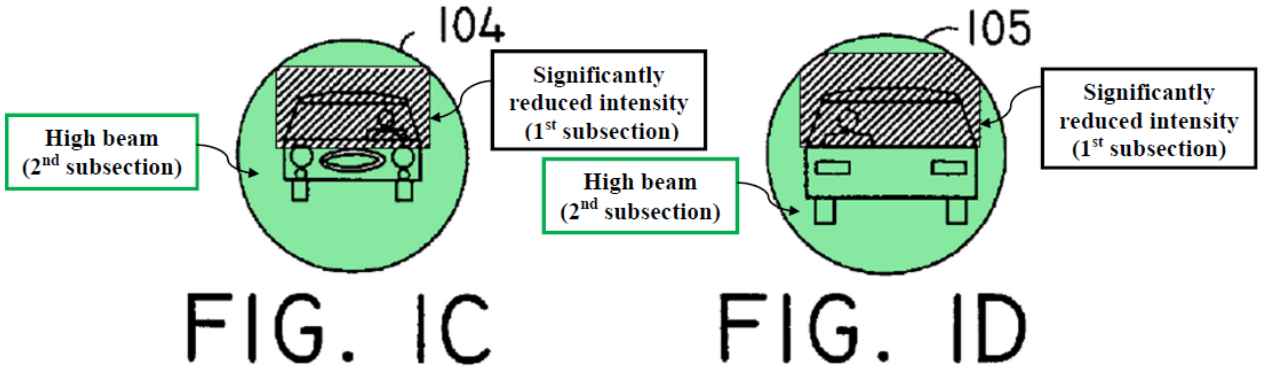

EX1005, FIGS. 1C-1D (annotated).

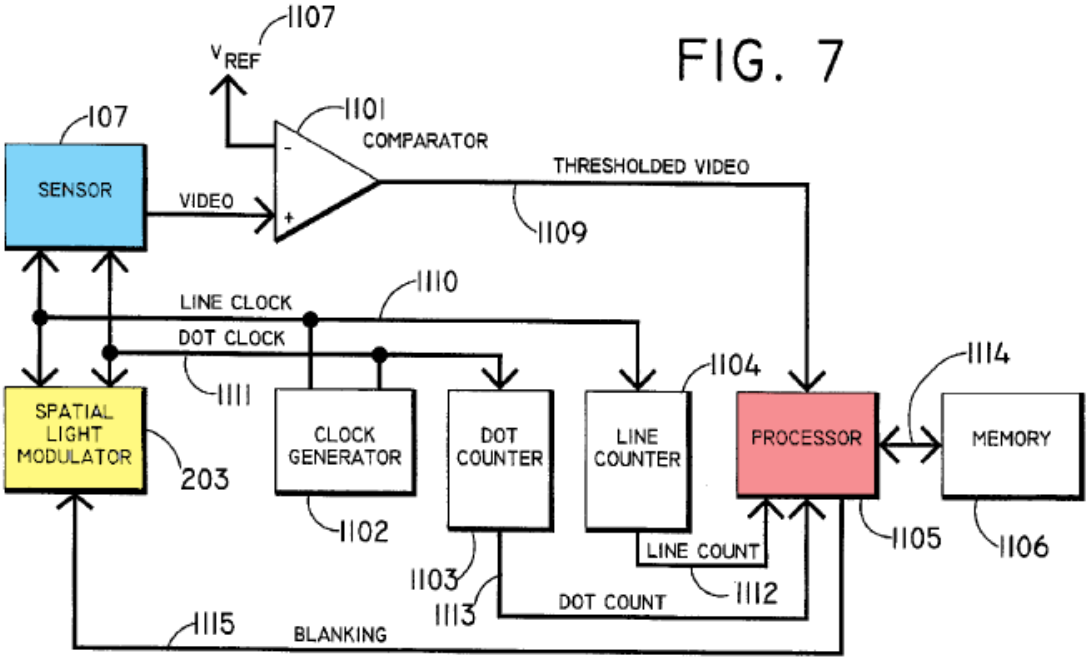

EX1005, FIG. 7 (annotated).

Should Patent Owner argue, incorrectly, that Beam-Thominet does not disclose [65.8], Stam does. EX1003, ¶263.

Again, Stam discloses a predefined dimmed illuminance value. EX1007, Abstract, 1:14-32, 9:12-10:8, FIG. 11; EX1003, ¶¶264-268.

Thus, the combined Beam-Thominet-Stam system would illuminate the second subsection (non-shaded area) "above the predefined illuminance." *Supra* Sections VI.A/VI.B.8; EX1003, ¶¶269-279.

10. [65.9]

Beam discloses [65.9]. *Supra* Sections V.A/V.B.7; EX1003, ¶280. Beam's controller/processor determines control instructions (e.g., feedback, blanking signals) to "cause the *intensity* of the selected microbeams to be

reduced…illumination beam having a *high level of illumination*…with only selected portions…being *reduced*" to output illumination in the first subsection (with the vehicle) and the second subsection (without the vehicle). EX1005, 7:30-36, FIGS. 1, 1C-1D, 7, Abstract, 1:5-18, 2:59-3:24, 4:10-25, 5:13-6:4, 6:11-16, 6:40-48, 8:23-38; EX1003, ¶280. Beam also discloses "controller module uses the *sensor spatial data (video)*…to *control the Illuminator*" and "*processor*…outputs *blanking signals*…*command[ing] the appropriate pixels to be reduced*." EX1005, 5:34-54, FIGS. 1, 1C-1D, 7, 8:35-38, 5:61-65, 1:5-18, 6:30-33; EX1003, ¶280. Thus, Beam's processor determines control instructions to "control[] one or more directional light sources" to output desired illumination in the first subsection (shaded area) and the second subsection (non-shaded area). EX1003, ¶280.

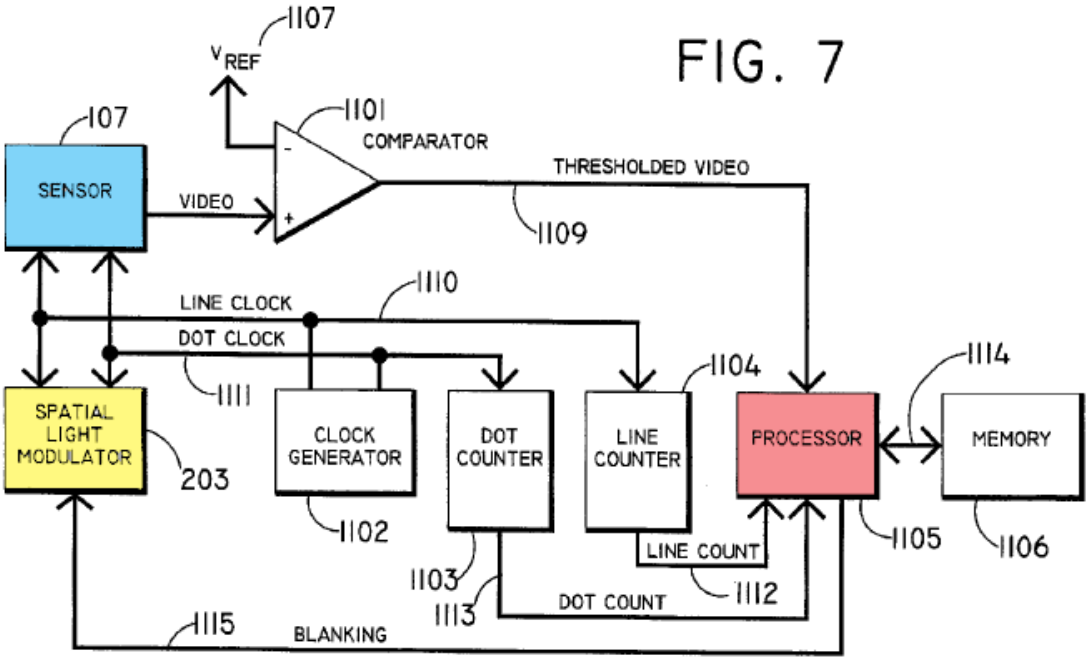

EX1005, FIG. 7 (control circuitry) (annotated).

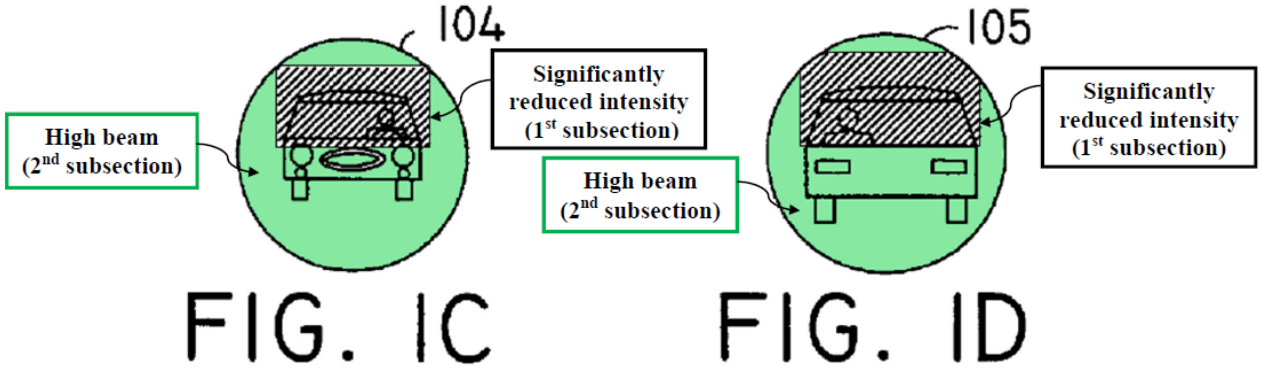

EX1005, FIGS. 1C-1D (annotated).

As discussed, Beam/Beam-Thominet discloses "directional light [clusters/sources]." *Supra* Section V.B.7; EX1003, ¶¶157-184, 281-306.

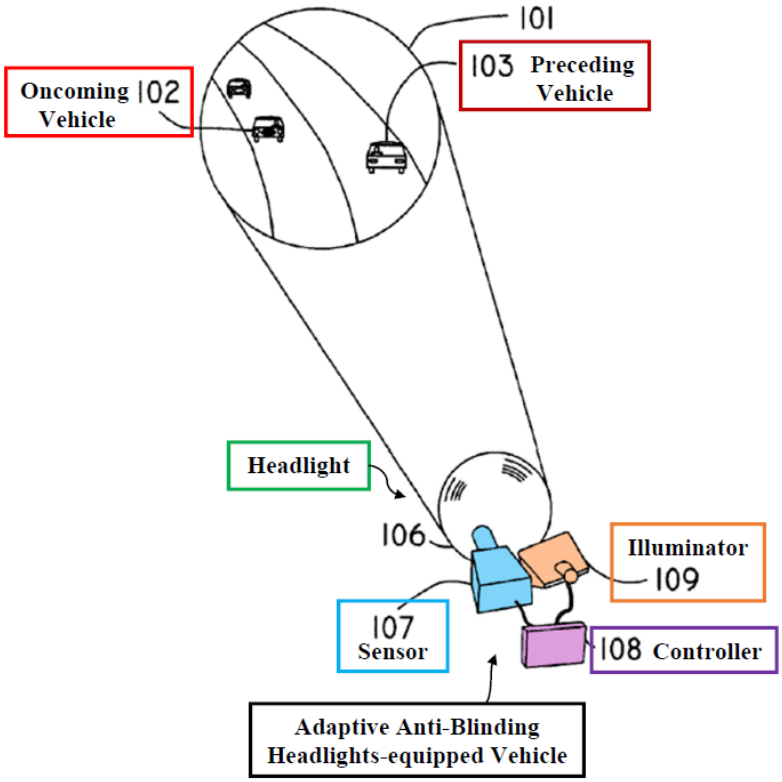

EX1005, FIG. 1 (annotated).

11. [65.10]

Beam's "controller module uses the *sensor spatial data (video)*…to *control the Illuminator*" and "*processor*…outputs *blanking signals*…*command[ing] the appropriate pixels to be reduced*." EX1005, 5:34-54, FIGS. 1, 1C-1D, 7, 8:35-38, 5:61-65, 1:5-18, 6:30-33; *supra* Section V.B.11; EX1003, ¶307. Thus, Beam's processor sends control instructions (blanking or non-blanking signals) to the illuminator (SLM 203) to "control[] the light sources to emit the headlight beam." EX1003, ¶¶307-309.

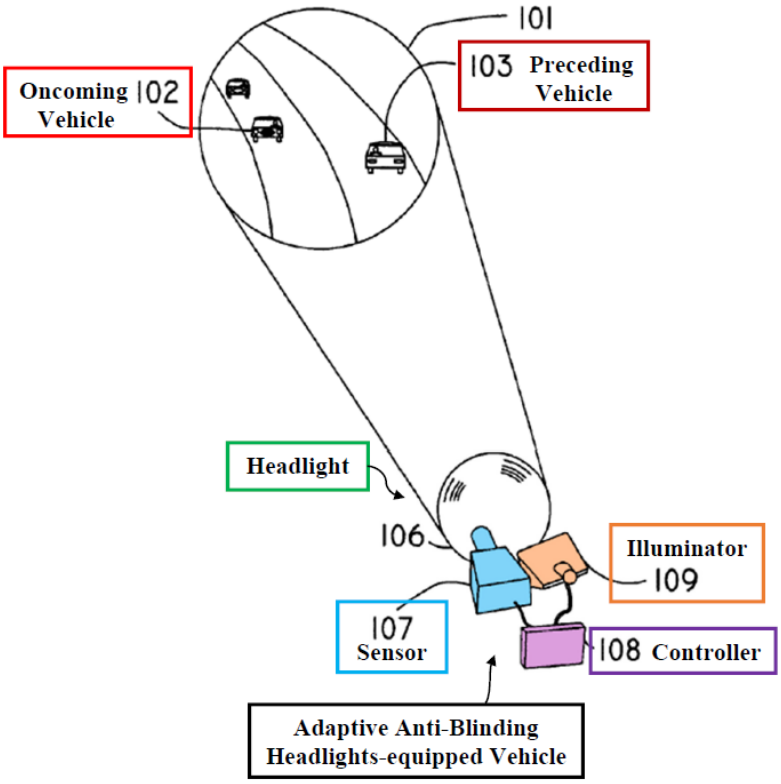

EX1005, FIG. 1 (annotated).

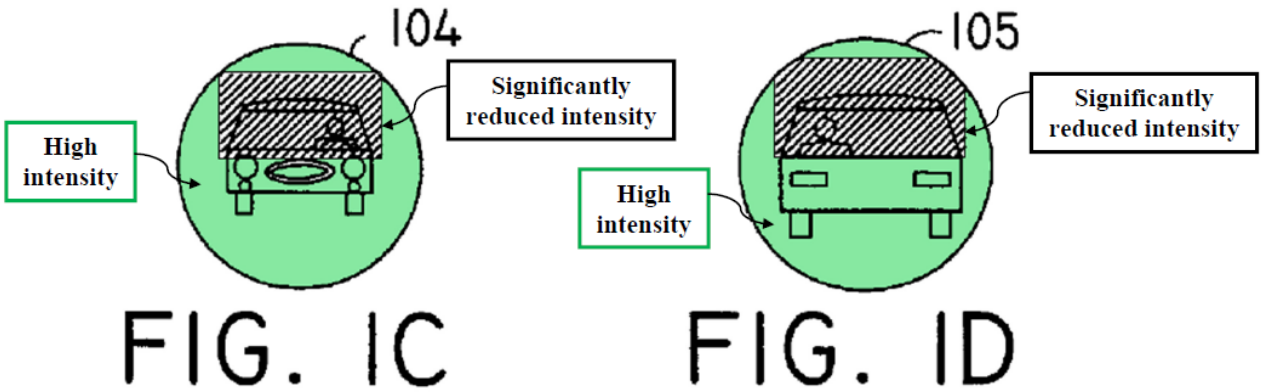

EX1005, FIGS. 1C-1D (annotated).

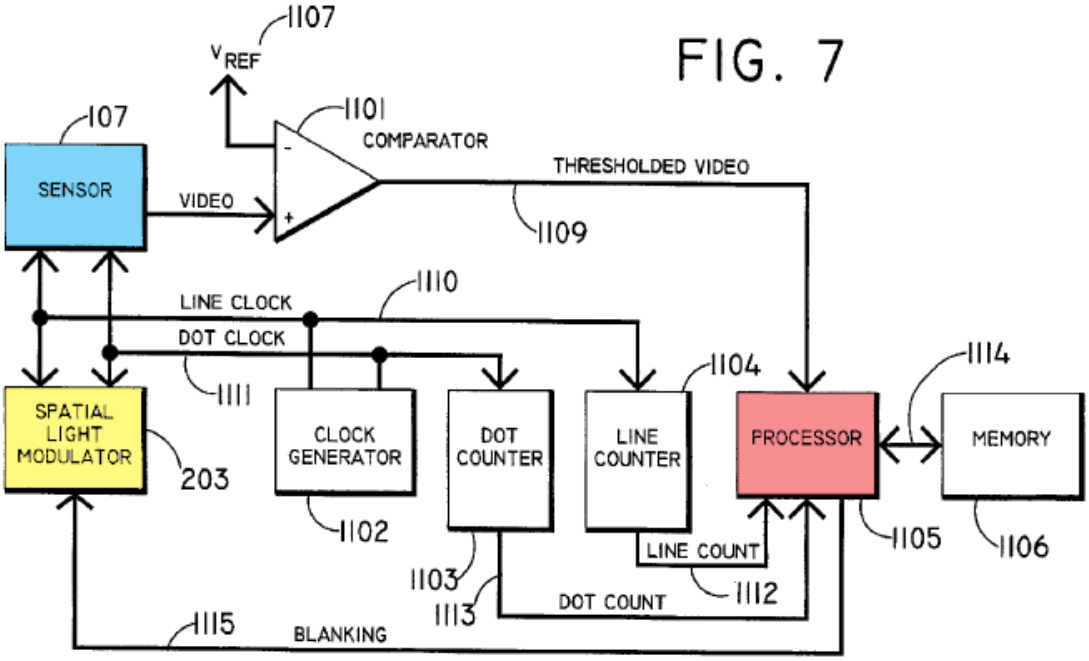

EX1005, FIG. 7 (control circuitry) (annotated).

VII. GROUND 3: THE COMBINATION OF BEAM, THOMINET, AND KOBAYASHI RENDERS OBVIOUS CLAIMS 32-36.

A. A POSA would have been motivated to combine Kobayashi with Beam-Thominet with a reasonable expectation of success.

A POSA would have been further motivated to modify Beam-Thominet to adjust light based on map data including road curvature, as in Kobayashi, to further

control Beam's microbeams to illuminate roadway curves. EX1003, ¶¶310-313; EX1005, 3:8-14, 3:37-44, 5:33-54, 7:1-13; EX1006, ¶¶8, 25, FIGS. 1B-2.

First, including an additional data source for Beam-Thominet's controller—Kobayashi's *known technique* of using map data including road curvature—would have enhanced Beam-Thominet by increasing/adjusting illumination based on an upcoming curve/turn, improving driver safety by providing light to where it is needed. *Second*, a POSA would have easily incorporated *known components* of Kobayashi's road profile calculating means 2 and/or vehicle advancing direction prediction means 3 (including GPS navigation device 29, *see* EX1008, Abstract, 1:10-2:35, 4:60-64, FIGS. 1, 10, 12) into Beam-Thominet. EX1003, ¶314. This would have provided road curvature data for Beam's detected scene, allowing Beam-Thominet's system to increase illumination toward the upcoming curve/turn, further improving safety. *Id.*; EX1005, 5:33-54, 3:8-45, 6:53-7:13; EX1008, 15:6-28.

Beam recognizes prior systems that control headlamps in response to changes in the vehicle's position (tilt on a hill) and steering mechanism (along a curve) and acknowledges those systems' safety benefits. EX1005, 2:1-6, 2:15-22; EX1003, ¶315.

SPERO EX. 2005

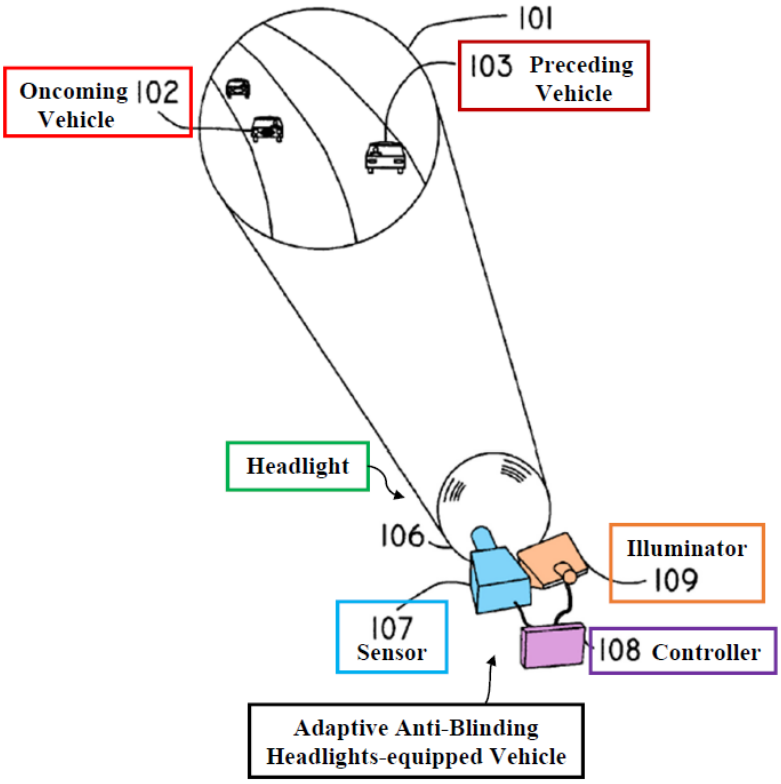

EX1005, FIG. 1 (annotated).

Thominet expresses the importance of illuminating "one side…to the right or to the left…during *d[r]iving over a curve* or…a *bending*" with directional light sources (region 28) to provide illumination in the "traveling direction." EX1006, ¶¶8, 25, FIGS. 1B-2; EX1003, ¶316.

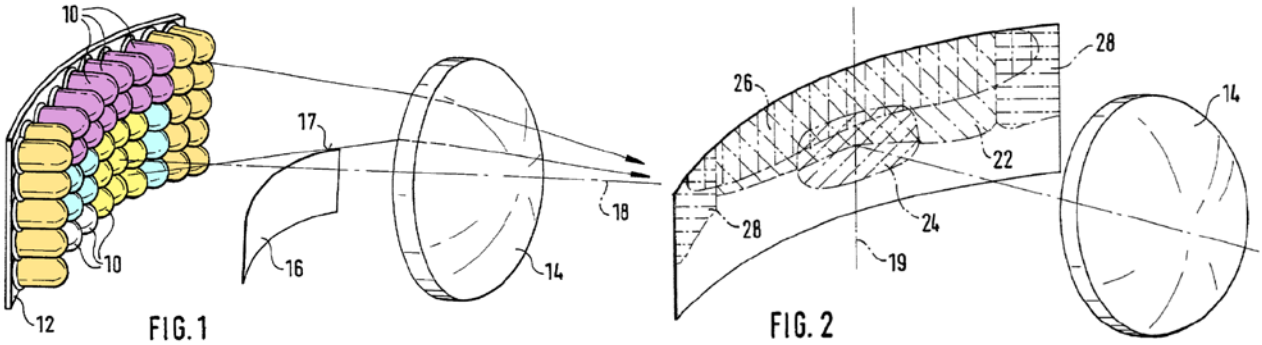

EX1006, FIGS. 1-2 (annotated).

Providing details on how to detect upcoming curves/turns would have made Beam-Thominet more active than prior systems, as Beam seeks to do (EX1005, 2:15-22), and further achieves Beam's purpose of improving driver safety. EX1003, ¶317; EX1005, 3:8-45, 6:53-7:13. Kobayashi's active *techniques and system components*, like Beam-Thominet, seek to enhance driver safety—using map data-based control including road curvature. EX1008, 15:6-28; EX1003, ¶¶95, 318. Kobayashi's road profile calculating means 2 and/or vehicle advancing direction prediction means 3 are inputs to control means 4, which alters the light direction from headlamp 5 in response to map data including road curvature input, enhancing safety. EX1008, 3:9-50, 6:4-62, FIG. 1, 15:6-28; EX1003, ¶¶96-99, 318. Kobayashi's system responds to real-world conditions, multiple curves, and intersections. EX1008, 11:34-14:52, 17:41-50; EX1003, ¶¶100, 318.

Kobayashi's Figure 10 shows illumination control can be planned and controlled for multiple curves. EX1003, ¶¶100, 319. When vehicle K turns left (point A), the light illuminates the left shoulder. Likewise, when vehicle K turns right on a subsequent curve (point C), the light illuminates the right shoulder. EX1008, 14:53-15:28, 17:3-18:67, FIG. 12; EX1003, ¶¶100, 319.

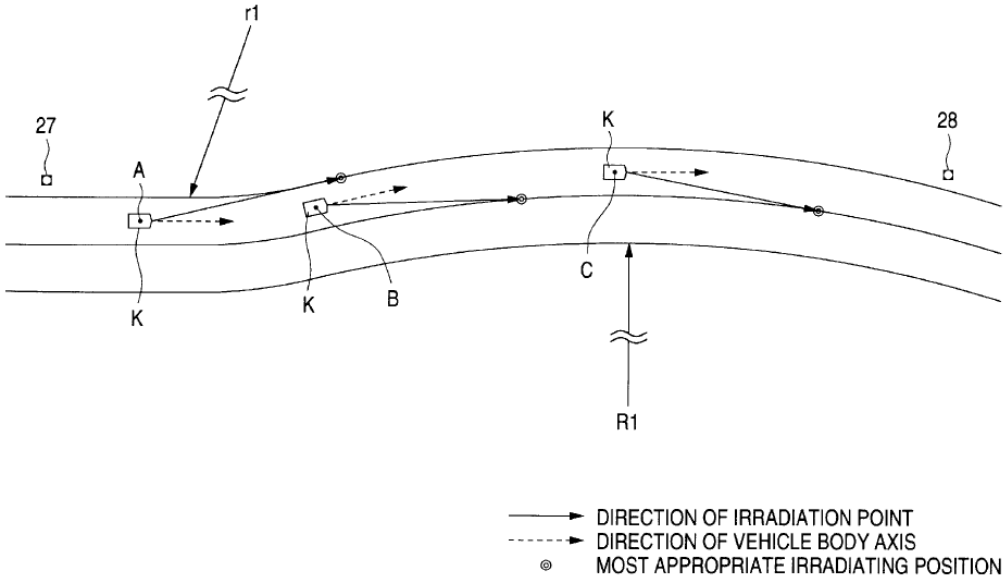

EX1008, FIG. 10.

Including an additional data source for Beam-Thominet's controller/processor—Kobayashi's map data including road curvature—would have enhanced Beam-Thominet by increasing illumination of upcoming curves/turns. EX1003, ¶320. This would have merely been applying Kobayashi's known technique (using map data including road curvature from GPS to shape/reshape light) to Beam-Thominet's similar, known device (dynamic headlamp system with controllable beams), in the same way. *Id.*; *KSR*, 550 U.S. at 417. Kobayashi's known technique is fully described along with its benefits (improved safety); thus, a POSA would have readily applied it to similar systems, such as Beam-Thominet's, in the same way. EX1003, ¶320; *KSR*, 550 U.S. at 419-421.

Additionally, or alternatively, this modification would have been simply combining known prior-art elements (Beam-Thominet's adaptive, direction-

controllable headlamps with Kobayashi's directional control based on map data including road curvature) according to known methods (disclosed in Beam-Thominet and Kobayashi) to yield predictable results (illuminating curves/turns, improving safety). EX1003, ¶321; *KSR*, 550 U.S. at 415-416.

A POSA would have had a reasonable expectation of success combining Kobayashi with Beam-Thominet, for example, by simply modifying software instructions stored in memory of Beam-Thominet's controller/processor (ECU) to adjust and direct light of the microbeams appropriately in view of Kobayashi's map data including road curvature. EX1003, ¶322. It also would have been a straightforward combination of prior-art elements: Kobayashi's road profile calculating means 2 and/or vehicle advancing direction prediction means 3 (including GPS navigation device 29) with Beam-Thominet (in communication with Beam's controller). *Id*.

This would have been routine and well within a POSA's skill due to the similarities in Beam-Thominet's and Kobayashi's adaptive light control systems and methods—their common components were well-known and there would have been no limitations for a POSA to make such modifications. EX1003, ¶¶323-324.

B. Claims 32/33/34/35/36

Claims 32-36 all recite language relating to illuminating an upcoming curve/turn by determining control strategy/instructions and appropriately controlling

the headlight output to illuminate the curve/turn. EX1003, ¶325. The language of claims 33 and 34 is patentably indistinct from the language of claim 32. *Id.*, ¶¶326-327; Appendix B. The language of claims 33 and 35 is identical, and the language of claims 34 and 36 is identical. *Id.*, ¶¶328-329.

Beam/Beam-Thominet discloses "directional light [clusters/sources]." *Supra* Sections V.A/V.B.7; EX1003, ¶330.

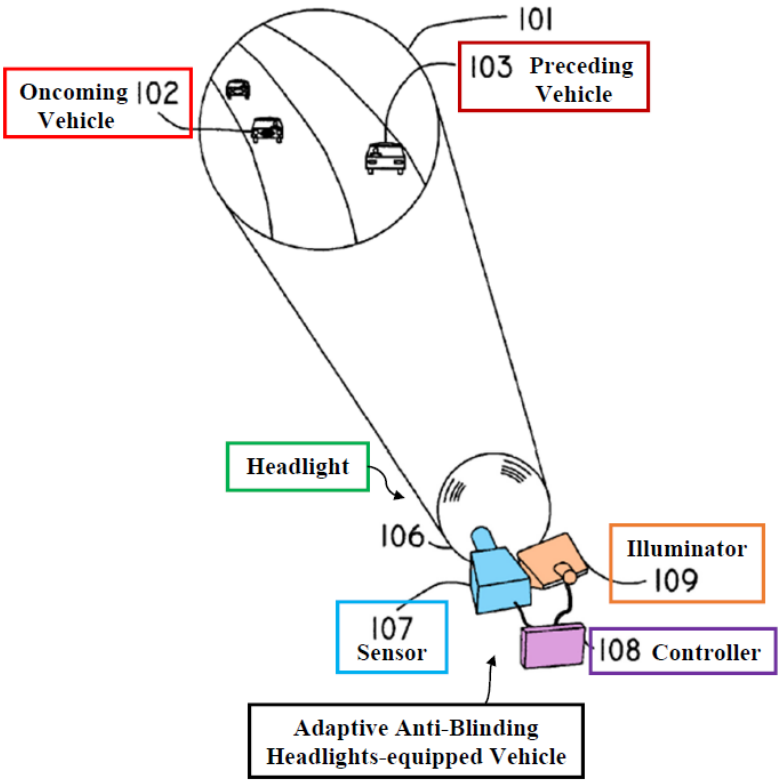

EX1005, FIG. 1 (annotated).

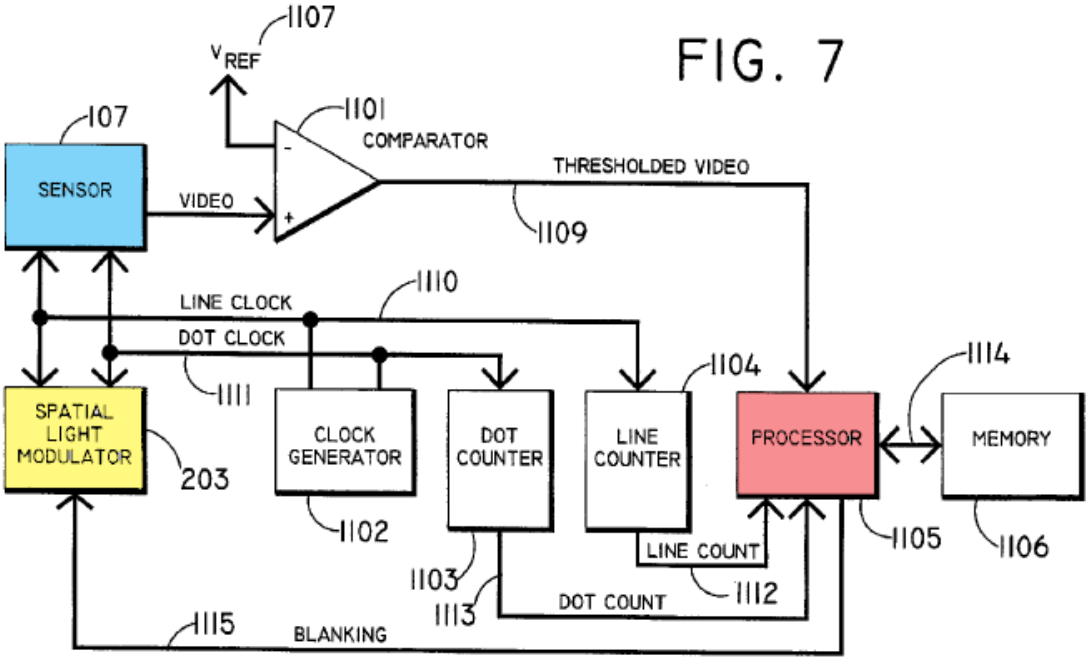

EX1005, FIG. 7 (annotated).

Kobayashi's headlamp illumination is controlled "[a]ccording to the *road profile information*" and "applied…[so] a portion of irradiating light is directed to a *specific direction*." EX1008, 14:59-66, 9:39-41, FIGS. 1, 9, 10, 4:60-64, 18:53-57, 4:7-8, 3:9-50, 14:53-15:28; EX1003, ¶¶331-332.

A POSA would have understood that Kobayashi discloses illumination for "an upcoming curve" because illumination is controlled along the "road profile" (e.g., left or right curve) recited in claim 32. EX1003, ¶333. Further, a POSA would have understood that Kobayashi discloses illumination for "an upcoming turn" because illumination is controlled along the "scheduled course" that includes an intended direction of a driver (e.g., left or right turn) recited in claims 33-36. *Id.*; EX1001, 54:1-15.

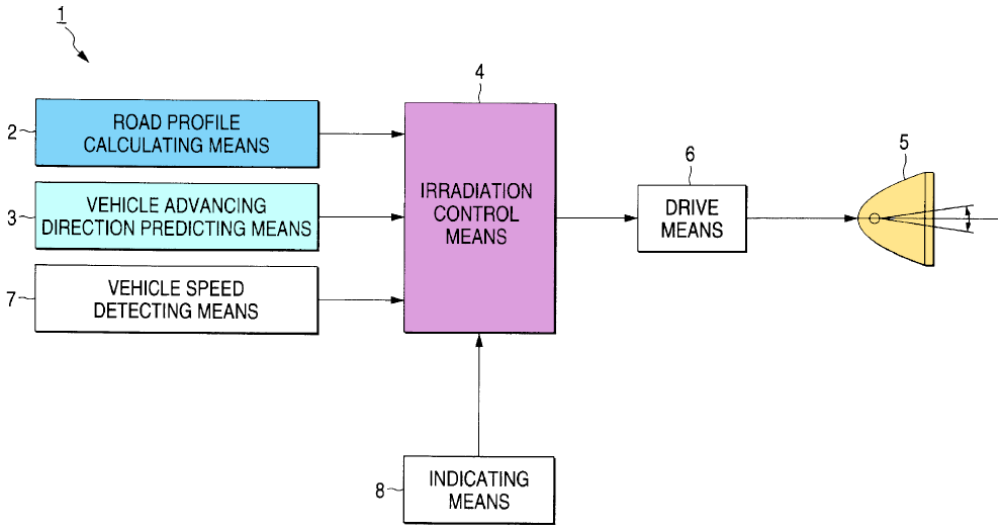

EX1008, FIG. 1 (annotated).

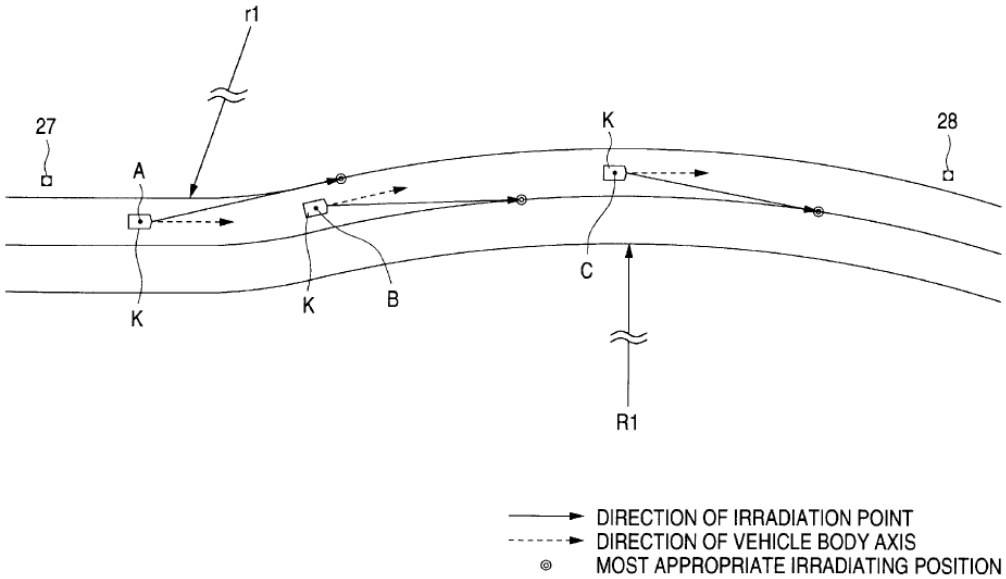

EX1008, FIG. 10.

Supra Section VII.A; EX1003, ¶¶310-323, 334.

Thus, Beam-Thominet-Kobayashi renders obvious claims 32-36. EX1003, ¶¶335-350.

VIII. GROUND 4: THE COMBINATION OF BEAM, THOMINET, STAM, AND KOBAYASHI RENDERS OBVIOUS CLAIM 70.

A. A POSA would have been motivated to combine Kobayashi with Beam-Thominet-Stam with a reasonable expectation of success.

A POSA would have been further motivated to combine Kobayashi with Beam-Thominet-Stam. *Supra* Section VII.A; EX1003, ¶351.

B. Claim 70

The language of claim 70 is patentably indistinct from claim 34. Claim 70 is therefore disclosed as discussed above. *Supra* Section VII.B; EX1003, ¶¶352-354.

IX. GROUND 5: THE COMBINATION OF BEAM, THOMINET, STAM, AND BRAUN RENDERS OBVIOUS CLAIMS 66-67.

A. A POSA would have been motivated to combine Braun with Beam-Thominet with a reasonable expectation of success.

A POSA would have been further motivated to modify Beam-Thominet-Stam to adjust light based on pattern recognition (e.g., identifying pedestrians, road-signs, obstacles, etc.), as in Braun (EX1009, 5:27-31, 14:21-30, 22:19-23, 23:28-24:27, 26:29-27:2, FIGS. 1, 5-6), to further control Beam's microbeams to illuminate objects, thereby improving visibility and driver safety. EX1003, ¶¶355-356; EX1005, 3:8-14, 3:37-44, 5:33-54, 7:1-13.

Including an additional control technique (software implementation) for Beam-Thominet-Stam's controller—Braun's *known technique* of pattern recognition—would have enhanced Beam-Thominet-Stam by identifying and illuminating objects of interest in a scene, increasing visibility and safety. EX1009,

SPERO EX. 2005

5:27-31, 14:21-30, 22:19-23, 23:28-24:27, 26:29-27:2, FIGS. 1, 5-6; EX1003, ¶¶357-358.

Beam recognizes the problem of identifying and illuminating other objects, for example, "*street signs*, terrain features, obstructions…*pedestrians*, bicyclists or animals" with just low beam illumination, and acknowledges the safety benefits of illuminating those objects with high beam illumination. EX1005, 1:54-59, 4:48-59; EX1003, ¶359.

And Braun's *technique* (software implementation), like Beam-Thominet-Stam, enhances driver visibility and safety—using pattern recognition. EX1009, 5:21-6:7, 11:14-17, 11:27-30, 12:17-20, 38:19-22; EX1003, ¶359. Braun's pattern recognition application identifies objects of interest (e.g., pedestrian, road-sign) and controller 118 adaptively controls luxels in illuminator 116 to illuminate the identified objects, improving visibility of the objects and capturing the driver's attention and/or alerting the driver to the danger of the objects, thereby enhancing safety. EX1009, 14:21-30, 23:28-24:27, FIGS. 1, 5-6, 6:8-15, 10:28-30, 22:19-23, 5:27-31, 26:20-29, 26:29-27:2; EX1003, ¶¶101, 359. And like Beam, Braun "identifies *oncoming vehicles* and automatically adjusts illumination…to *prevent glare*…[and] *blinding* a driver," so Braun's pattern recognition technique (software implementation) would have been a natural extension and improvement on Beam's AABH system. EX1009, 6:4-7, 12:17-20, 38:19-22; EX1003, ¶359.

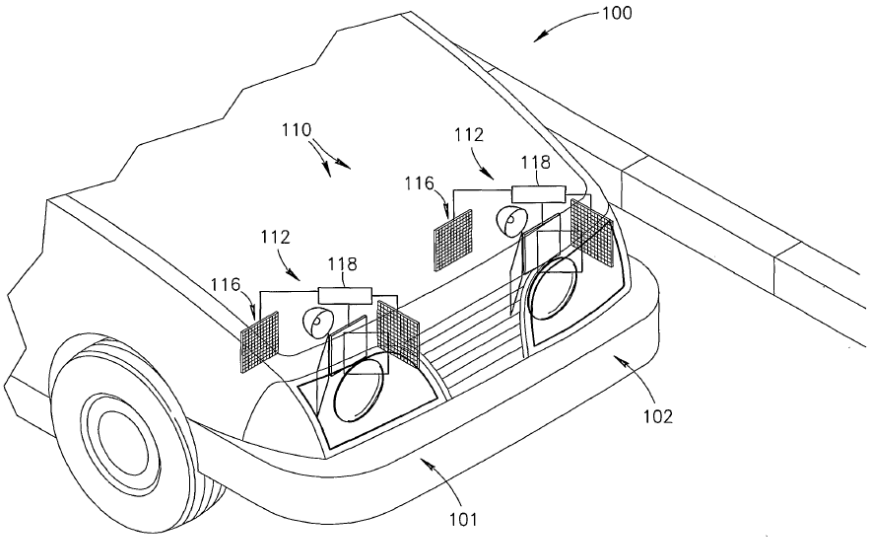

FIG.5

EX1009, FIG. 5.

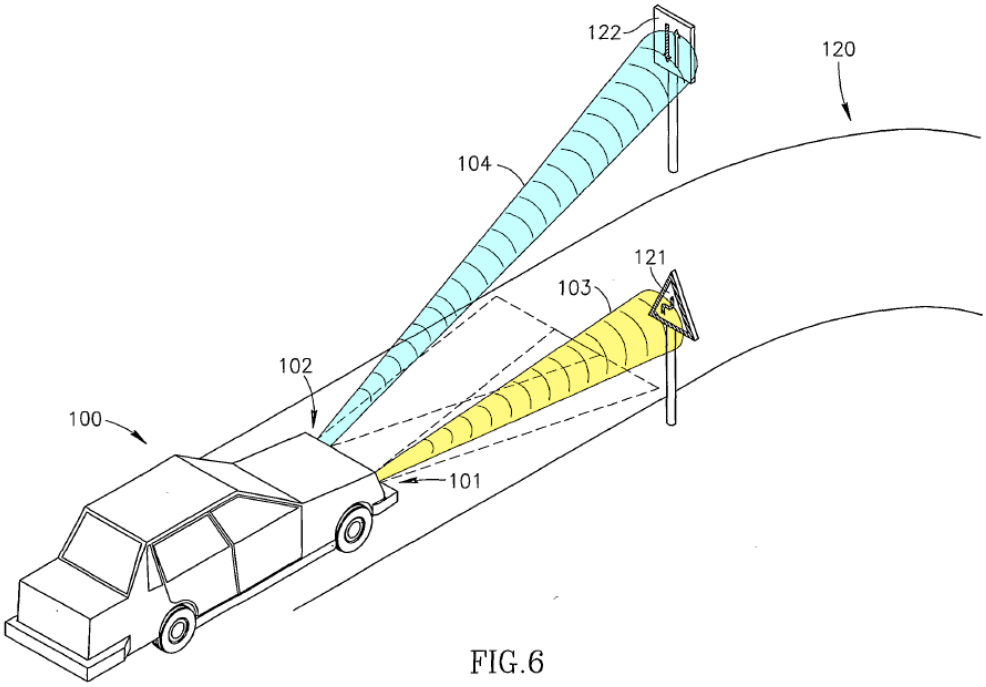

FIG.6

EX1009, FIG. 6 (annotated).

The additional control of having pattern recognition as in Braun, implemented with Beam's controller 108/illuminator 109 (including SLM 203), would have enhanced Beam-Thominet-Stam's system by identifying and illuminating objects of

interest, capturing the driver's attention and/or alerting the driver to the danger of the objects. EX1003, ¶360. This would have merely been applying Braun's known technique (software implementation: pattern recognition to identify/illuminate objects of interest) to Beam-Thominet-Stam's similar, known device (dynamic headlamp system with controllable beams), in the same way. EX1005, 5:46-54, 6:14-19, 5:33-35, 4:10-25, FIGS. 1, 1C-1D, 7; EX1003, ¶360; *KSR*, 550 U.S. at 417. Braun's known technique is fully described along with its benefits (improved visibility, increased safety); thus, a POSA would have readily applied it to similar systems, such as Beam-Thominet-Stam's, in the same way. EX1003, ¶360; *KSR*, 550 U.S. at 419-421.

A POSA would have had a reasonable expectation of success combining Braun with Beam-Thominet-Stam, for example, by modifying software instructions stored in memory of Beam-Thominet-Stam's controller/processor (e.g., an algorithm) to adjust/direct light of the microbeams appropriately in view of Braun's pattern recognition. EX1003, ¶361. This would have been routine and well within a POSA's skill due to the similarities in Beam-Thominet-Stam's and Braun's adaptive systems—their common components were well-known and there would have been no limitations for a POSA to make such modifications. *Id*., ¶¶361-362; EX1009, 22:17-25.

B. Claims 66/67

Claims 66-67 relate to identifying and illuminating an object: a "pedestrian" (claim 66) and a "road-sign" (claim 67). EX1003, ¶¶363-364.

Braun's system "'pattern recognize[s]' presence of *people*…and *spotlight[s] the people* to alert the driver" and "controls illumination…to the *identified features and/or objects*." EX1009, 26:31-27:1, 22:17-23, FIGS. 5-6, 5:21-6:7, 14:21-30, 23:8-24:27; EX1003, ¶367. Also, Braun's "*pattern recognition* application processes the *images*…and *identifies roadway signs 121 and 122*" and "[c]ontroller 118 [] controls luxels in illuminators 116…to provide light beams 103 and 104 that *spotlight roadway signs 121 and 122*." EX1009, 24:4-7, FIGS. 5-6; EX1003, ¶367. A POSA would have understood that Braun discloses "determining an illumination level…for at least a third subsection" because Braun's system "spotlights" (illuminates) "people" and "roadway signs" in particular regions of the roadway scene. EX1009, 4:17-5:1, 7:1-7, 11:14-17, 23:5-7; EX1003, ¶368.

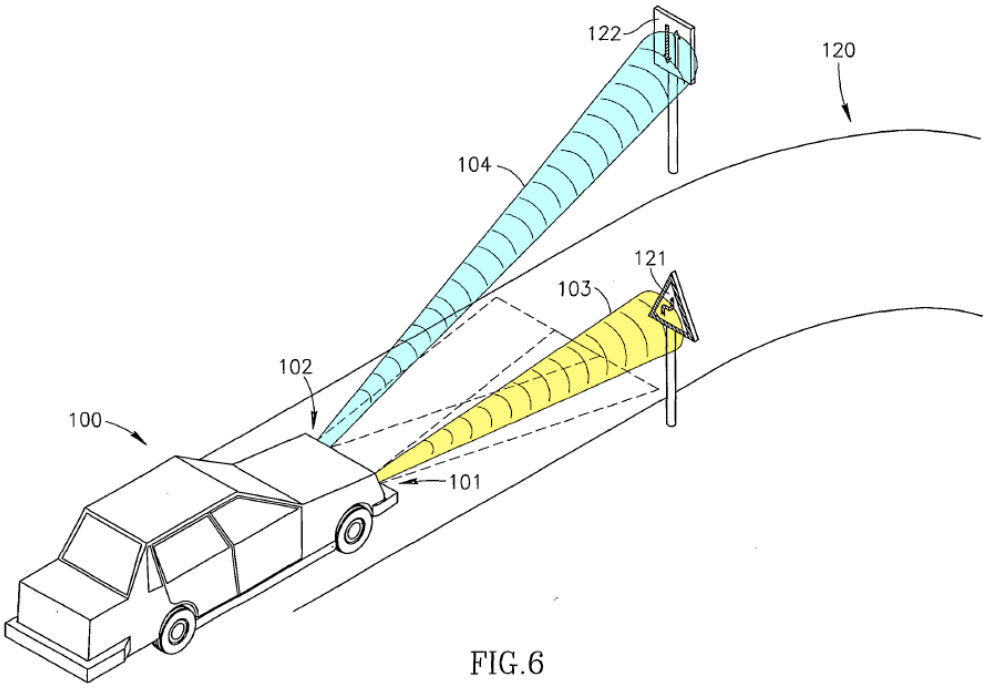

EX1009, FIG. 6 (annotated).

Supra Section IX.A; EX1003, ¶¶355-361, 369.

Thus, Beam-Thominet-Stam-Braun renders obvious claims 66-67. EX1003, ¶¶365-366, 370-378.

X. GROUND 6: THE COMBINATION OF BEAM, THOMINET, AND HARBERS RENDERS OBVIOUS CLAIMS 28-29.

A. A POSA would have been motivated to combine Harbers with Beam-Thominet with a reasonable expectation of success.

A POSA would have been further motivated to modify Beam-Thominet to adjust light based on multiple colored directional illumination for different functions, as in Harbers. EX1003, ¶379; EX1005, 3:29-44, 3:8-14, 5:33-54, 7:1-13; EX1006, ¶¶5, 7, 17-18, 21-26.

First, including an additional control technique (software implementation) for Beam-Thominet—Harbers's *known technique* of using multiple colored directional beam regions for different functions—would have added different functions to Beam-Thominet's visibility for different driving situations. EX1003, ¶¶380-381. Further, Thominet discloses "light beams of *different light colors* is possible…for different signal functions" and "different partial regions [22, 24, 26, 28] emit light of *different colors*." EX1006, ¶¶6, 27, FIGS. 1B-2; EX1003, ¶381.

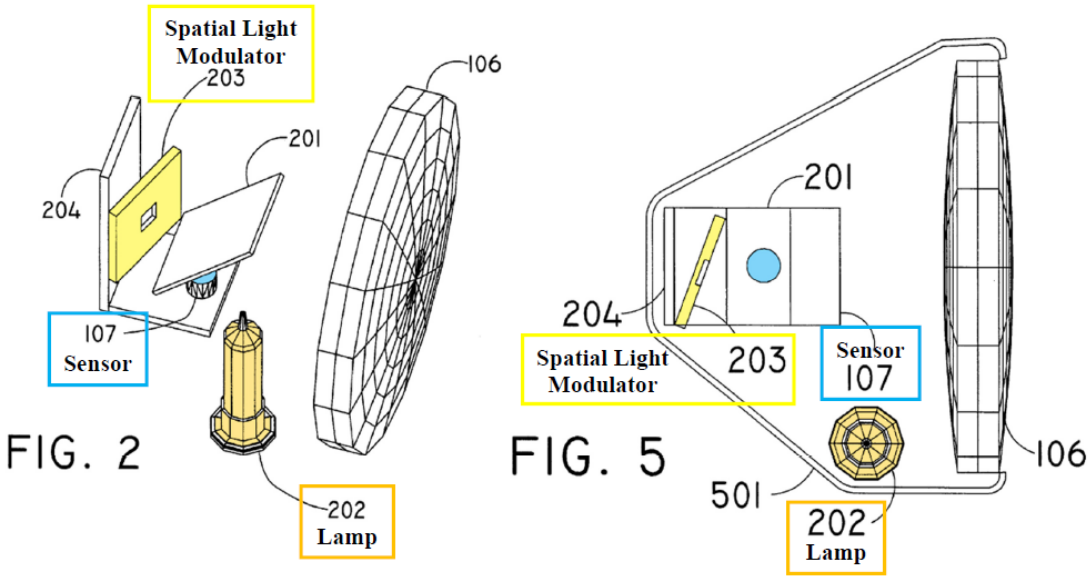

EX1005, FIGS. 2, 5 (annotated).

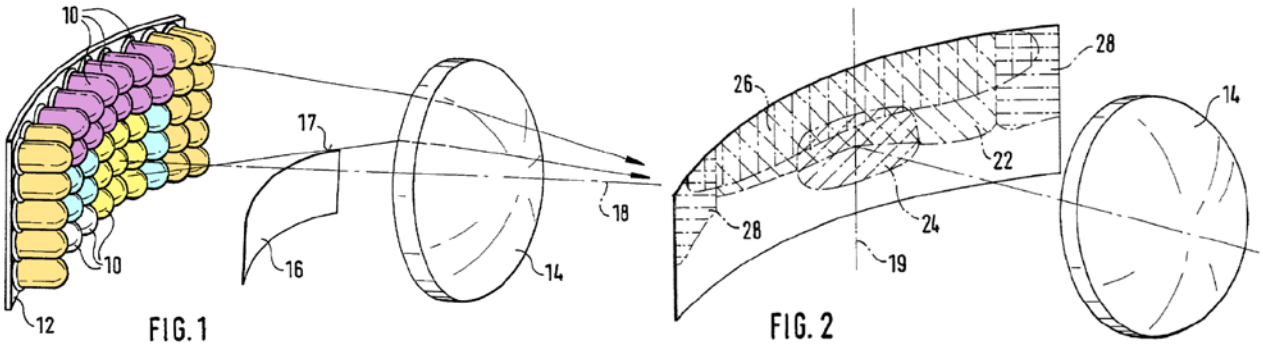

EX1006, FIGS. 1-2 (annotated).

And Harbers's *technique* (software implementation), like Beam-Thominet, seeks to enhance driver visibility, thereby increasing safety—using multiple colored directional beam segments for different functions. EX1011, 5:14-26, 6:1-7, 6:27-7:19, 8:10-18, FIGS. 1B-2, 4A, 10:6-14, 7:27-32, 9:28-10:5, 13:5-7; EX1003, ¶¶102, 382.

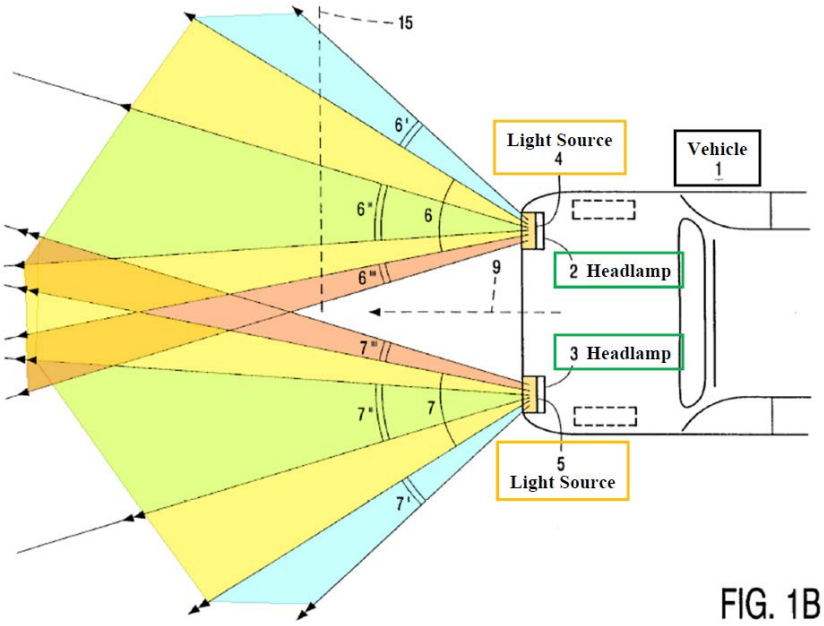

EX1011, FIG. 1B (annotated).

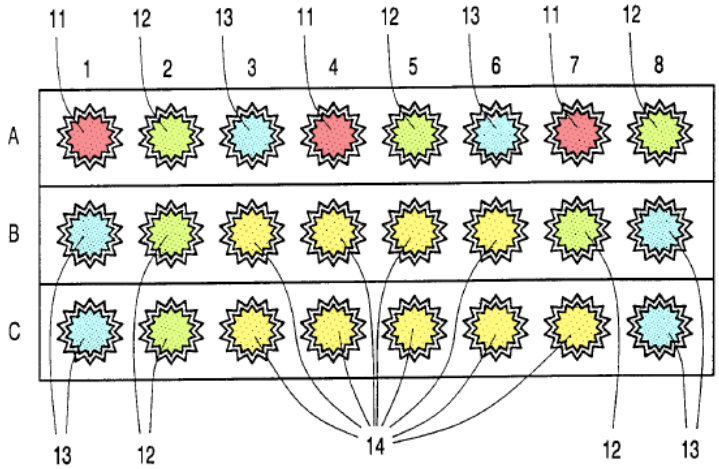

EX1011, FIG. 2 (annotated).

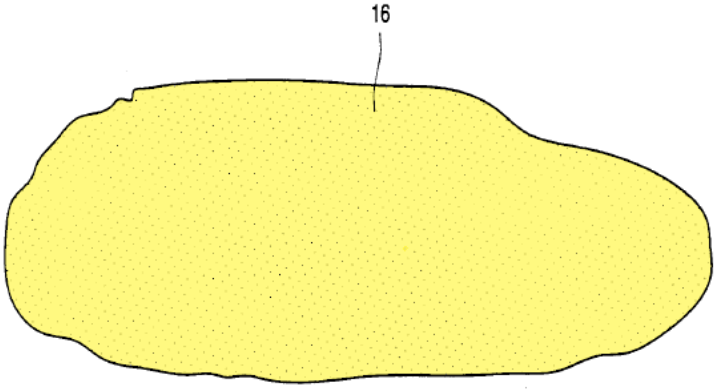

EX1011, FIG. 4A (annotated).

The additional color control as in Harbers, implemented with Beam-Thominet's controller/illuminator, would have provided Beam-Thominet's system with different colored distributions for different driving situations, thereby improving safety. EX1011, 2:33-3:10, 4:15-21, 5:21-26; EX1003, ¶¶102, 383. This would have merely been applying Harbers's known technique (software implementation: using multiple colored directional beam segments for different functions), to Beam-Thominet's similar, known device (dynamic system with controllable headlamps), in the same way. EX1003, ¶¶103, 383; *KSR* 550 U.S. at 417 (2007). Harbers's known technique is fully described along with its benefits (improved visibility for different functions); thus, a POSA would have readily applied it to similar systems, such as Beam-Thominet's, in the same way. EX1011, 2:33-3:10, 4:15-21, 5:21-26; EX1003, ¶383; *KSR*, 550 U.S. at 419-421.

A POSA would have had a reasonable expectation of success combining Beam-Thominet and Harbers, for example, by modifying software instructions in

memory of Beam's controller/processor to organize Beam's microbeams into multiple colored directional beam segments for different functions. EX1003, ¶384. This would have been routine and well within a POSA's skill due to the similarities in Beam-Thominet's and Harbers's adaptive systems—their common components were well-known and there would have been no limitations for a POSA to make such modification. *Id*.

Second, a POSA would have sought to incorporate *known components* (hardware implementation) of Harbers's opto-electronic elements 11-14 on a "curved substrate" (with differently colored opto-electronic elements 11-14, *see* EX1011, 5:14-26, 6:1-7, 6:27-7:32, FIGS. 1B-2) into Beam-Thominet's system (illuminator). EX1003, ¶¶104, 385. Again, this would have, like Harbers, provided different colored spatial distributions for different driving situations, improving visibility and thereby safety. *Id*., ¶385.

Through its *system components*, Harbers, like Beam-Thominet, seeks to enhance driver visibility and thereby increase safety. EX1011, 5:14-26, 6:1-7, 6:27-7:19, 8:10-18, FIGS. 1B-2; EX1003, ¶¶105, 386-387. Opto-electronic elements 11-14 arranged on a "curved substrate," with different angles/aimings relative to the vehicle, provide colored beam segments for different driving situations. EX1011, 5:14-26, 6:1-7, 6:27-7:19, FIGS. 1B-2, 7:27-32, 9:28-10:5, 13:5-7; EX1003, ¶¶104, 387.

SPERO EX. 2005

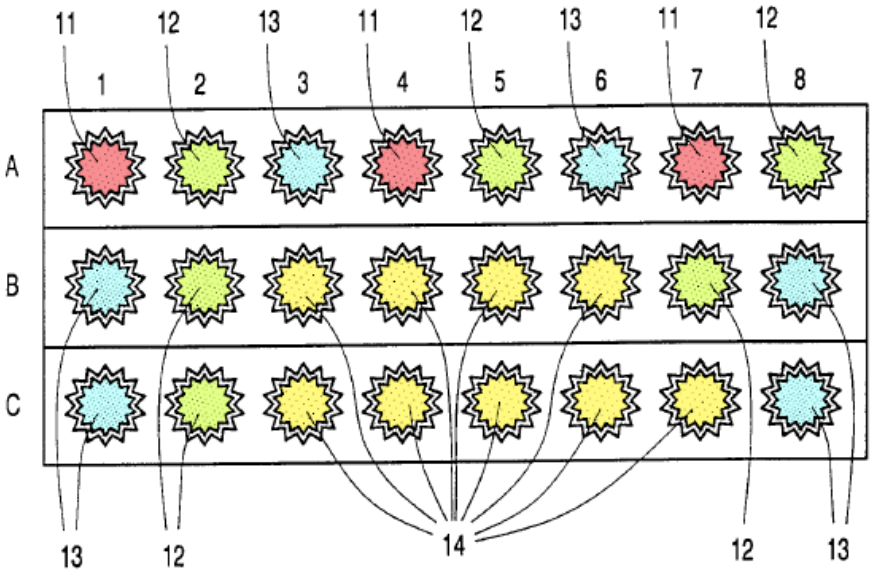

EX1011, FIG. 2 (annotated).

Like the software implementation, this hardware combination—Beam's array of light sources 401 and Harbers's differently colored opto-electronic elements 11-14 on a curved substrate—would have provided Beam-Thominet's system with different colored spatial distributions for different driving situations, as in Harbers. EX1003, ¶388. This would have been merely combining prior-art elements or a simple substitution of one known element for another (Beam's array of light sources 401 on a flat surface and Harbers's opto-electronic elements 11-14 on a curved substrate) according to known methods (disclosed in Beam-Thominet and Harbers) to yield predictable results (improved visibility and safety). *Id.*; *KSR*, 550 U.S. at 415-418.

A POSA would have had a reasonable expectation of success combining Beam-Thominet and Harbers, for example, by simply modifying the flat surface of

Beam's array of light sources 401 with Harbers's curved substrate to provide multiple colored light sources (e.g., directional beam segments) for different functions. EX1003, ¶389. This would have been routine and well within a POSA's skill due to the similarities in Beam-Thominet's and Harbers's adaptive systems—their common components were well-known and there would have been no limitations for a POSA to make such modifications. *Id.*, ¶¶390-391.

B. Claim 28

Beam recognizes the problem of illuminating "terrain features, obstructions or potholes in the road" with just low beam illumination. EX1005, 5:33-54, 1:54-59, FIGS. 1, 1C-1D, 7, 3:37-44, 4:53-59; EX1003, ¶392.

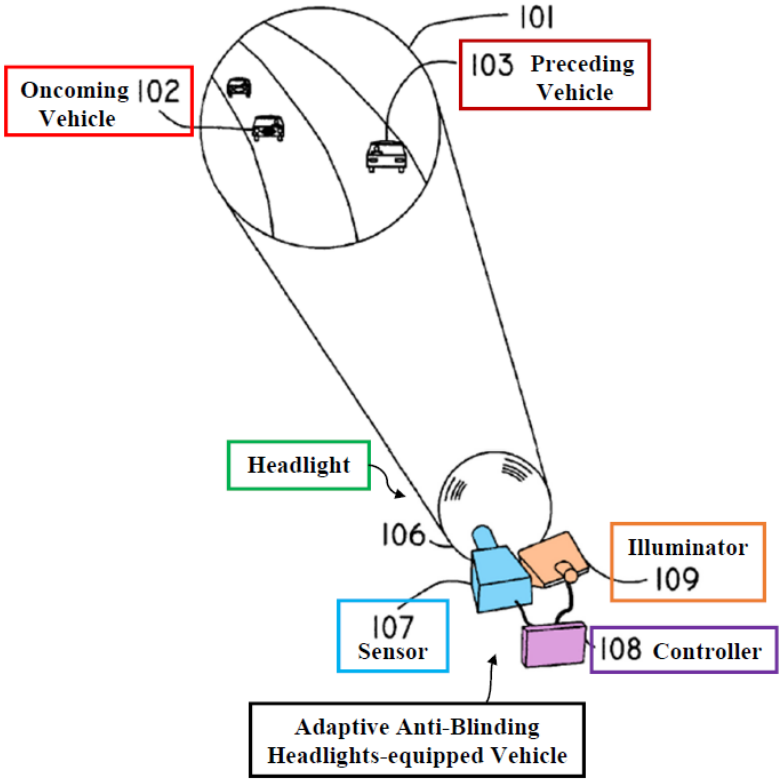

EX1005, FIG. 1 (annotated).

Harbers discloses "*on-axis* part…is adapted to…*green-yellow light*…*off-axis* parts…is adapted to…*blue-green light*." EX1011, 6:3-7, FIGS. 1B, 2, 9:1-10:5, 5:21-26; EX1003, ¶¶393-394. Thus, Harbers's independently controllable, colored directional light beam segments provide "peripheral night vision" with "blueish…illumination along a side of a road…[and] yellow tinted illumination along the road." EX1003, ¶394.

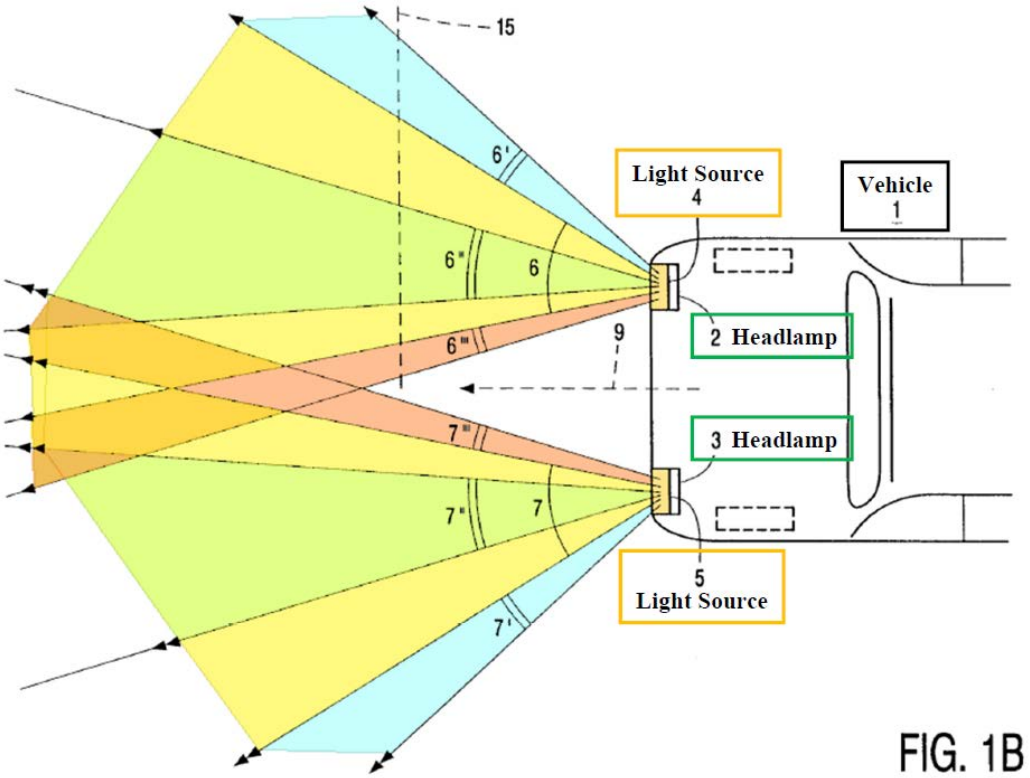

EX1011, FIG. 1B (annotated).

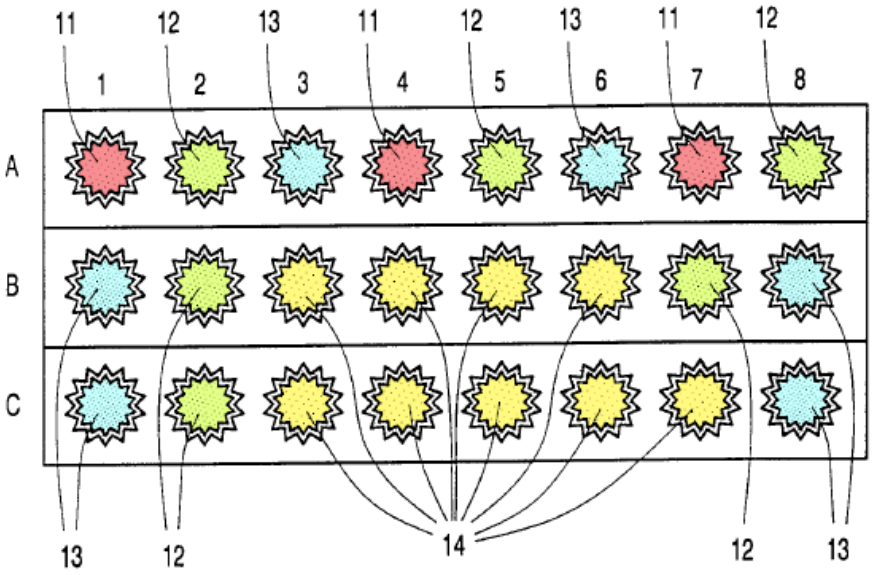

EX1011, FIG. 2 (annotated).

Supra Section X.A; EX1003, ¶¶379-390, 395.

Thus, Beam-Thominet-Harbers renders obvious claim 28. EX1003, ¶¶393, 396-408.

C. Claim 29

Beam discloses "lower[ing] the beams for conditions like rain, *snow*, or …*fog*." EX1005, 5:33-54, 3:34-44, FIGS. 1, 1C-1D, 7, 4:53-59; EX1003, ¶409.

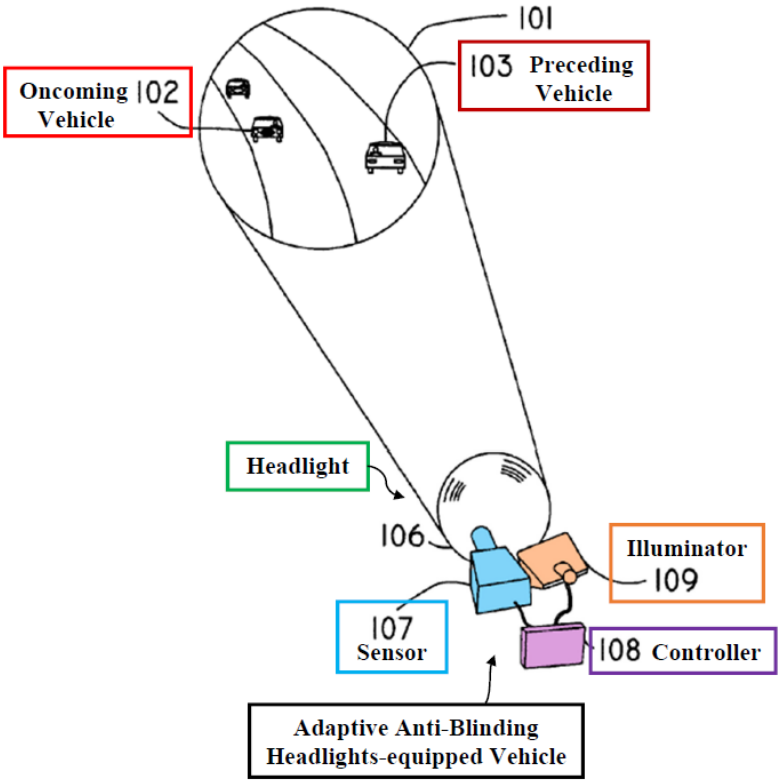

EX1005, FIG. 1 (annotated).

Harbers discloses "[u]nder unfavorable weather conditions, in particular *fog and snow*…a *relatively wide beam 16* is obtained which is substantially composed of *yellow light*." EX1011, 10:6-14, FIGS. 1B, 2, 4A, 9:23-25, 4:17-21; EX1003, ¶¶410-411.

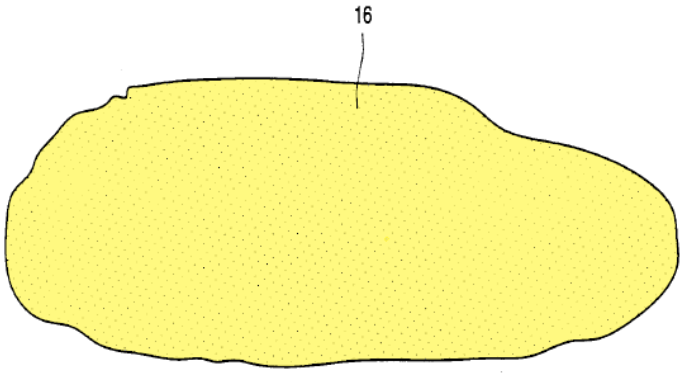

EX1011, FIG. 4A (annotated).

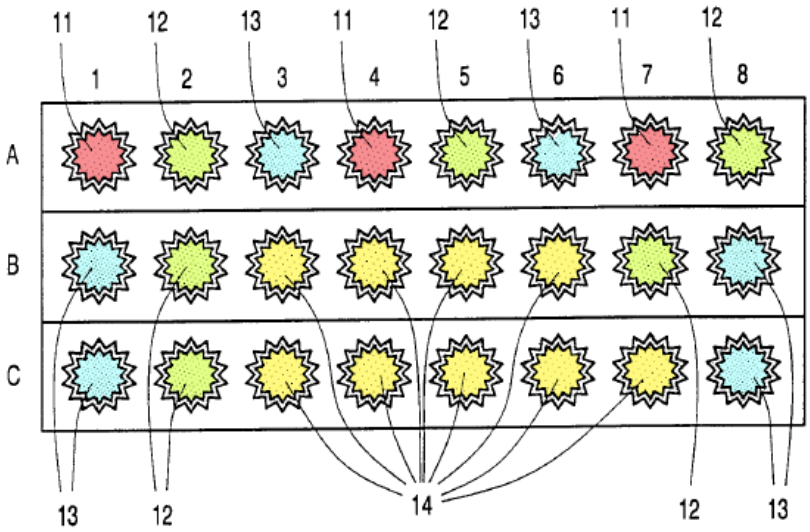

EX1011, FIG. 2 (annotated).

Supra Section X.A; EX1003, ¶¶379-390, 412.

Thus, Beam-Thominet-Harbers renders obvious claim 29. EX1003, ¶¶410, 413-426.

XI. GROUND 7: THE COMBINATION OF BEAM, THOMINET, STAM, AND HARBERS RENDERS OBVIOUS CLAIMS 68-69.

A. A POSA would have been motivated to combine Harbers with Beam-Thominet-Stam with a reasonable expectation of success.

For the same reasons described in Section X.A, a POSA would have been further motivated to combine Harbers with Beam-Thominet-Stam. EX1003, ¶427.

B. Claim 68

The language of claim 68 is patentably indistinct from claim 28. Therefore, as discussed above claim 68 is rendered obvious. *Supra* Section X.B; EX1003, ¶¶428-429.

C. Claim 69

The language of claim 69 is patentably indistinct from claim 29. Therefore, as discussed above claim 69 is rendered obvious. *Supra* Section X.C; EX1003, ¶¶430-432.

XII. GROUND 8: THE COMBINATION OF KARLSSON AND HARBERS RENDERS OBVIOUS CLAIMS 26-31, 65, AND 68-69.

Karlsson discloses every feature recited in claims 26-27, 30-31, and 65. The specific portions of Karlsson that disclose each feature are provided and explained below. To avoid doubt, Karlsson is combined with Harbers, for [26.6] and [65.9] rendering the claims obvious. EX1003, ¶433.

"directional light [clusters/sources]" [26.6]/[65.9]

Karlsson's "spotlight beams 34 can be…a *grid of separate light sources*, such as *LEDs*…controlled either *individually* or in *groups*…[and] may also be made up of…*light modulator means*" and "*light modulator means 3* advantageously can be switched to…*given directions*." EX1010, 11:25-28, 14:1-9, FIGS. 3, 6, 14. Each spotlight beam is a directional "cluster" or "source," having its own independent *direction* (angle/aiming), that combines to form the headlamp beam; so the combination of Karlsson's spotlight beams form at least one directional light cluster/source to provide illumination in desired subsections. *Id.*, 4:26-31, 14:1-15, FIGS. 6, 14; EX1003, ¶¶106-111, 434. Karlsson also discloses clusters with at least

two spotlight beams. EX1010, 14:1-9, 14:12-15, 14:26-30, FIGS. 6, 14; EX1003, ¶434.

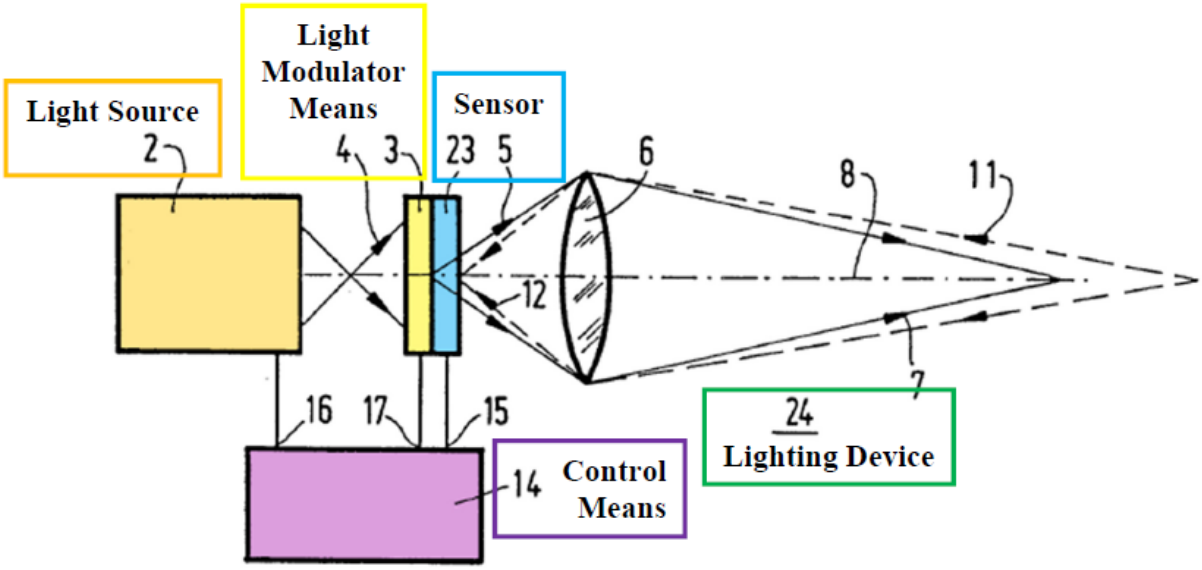

EX1010, FIG. 3 (annotated).

Thus, Karlsson discloses "directional light [clusters/sources]"—independently controllable directional spotlight beam clusters/sources—that "create an output headlight beam meeting the determined illumination requirements"/"achieve the determined illumination levels" as in [26.6]/[65.9]. EX1003, ¶435.

If Patent Owner argues, incorrectly, that Karlsson does not disclose [26.6]/[65.9], Harbers does. *Id*., ¶¶436-437.

"predefined illuminance" [65.6]/[65.8]

Karlsson's "spotlight sources indicated at D provide the *dipped light function*." EX1010, 19:24-27, FIGS. 14-15, 1:27-29, Abstract, 1:16-18. Thus, Karlsson's system includes a "predefined" illuminance: a "dipped" illuminance.

EX1003, ¶¶438-440. Further, illumination in shaded areas (outside emitted light beam 50) is "*no light at all* or light having a low intensity is emitted in those directions from which light is detected" (no intensity in shaded area is *below* Karlsson's predefined *dipped* illuminance: <u>shaded illuminance < dipped illuminance</u>), and illumination in non-shaded areas (within emitted light beam 50) is "*higher than* that of conventional *dipped headlights*" and "longer-range *main-beam*" (high intensity in non-shaded area is *above* Karlsson's predefined *dipped* illuminance: <u>non-shaded illuminance > dipped illuminance</u>). EX1010, Abstract, 1:18-23, 9:19-22, 19:24-27, FIGS. 3, 14-15; EX1003, ¶441.

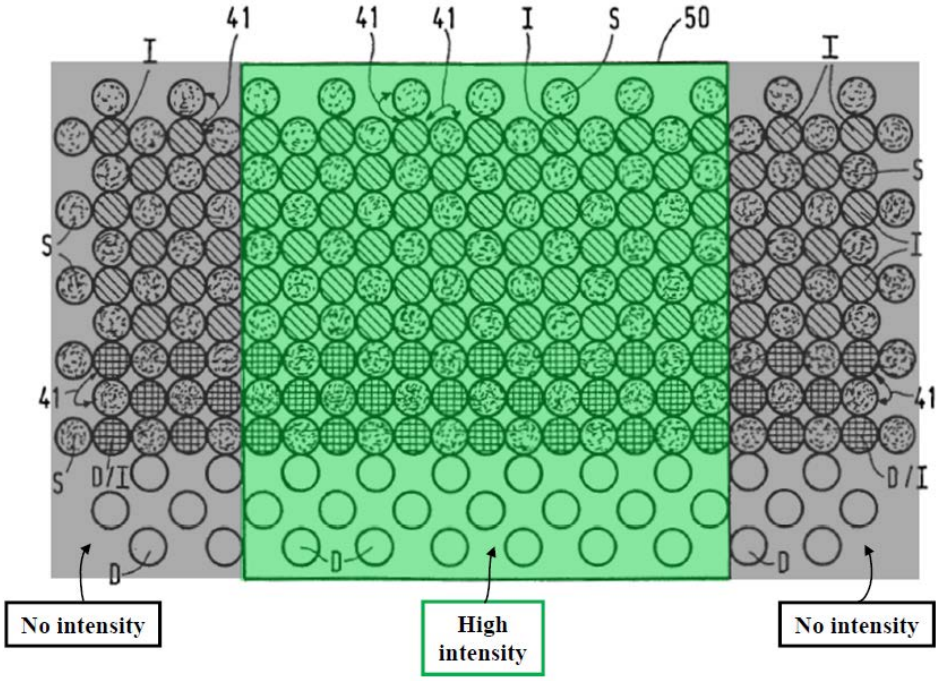

EX1010, FIG. 14 (annotated).

Therefore, Karlsson discloses a "predefined" (dipped) illuminance and outputting illumination below and above the predefined illuminance (shaded < dipped < non-shaded) as in [65.6] and [65.8]. EX1003, ¶442.

The '503 patent does not disclose a predefined illuminance value, so a value is not required to satisfy [65.6] and [65.8]. *Id.*, ¶443. Further, a POSA reading Karlsson would have understood Karlsson's "dipped" illuminance, for example, teaches a "predefined" illuminance, because Karlsson uses the dipped illuminance as a reference point below and above which to output illumination, preventing glare to other vehicles while increasing illumination to other areas. *Id.*, ¶¶443-444; EX1010, 9:19-26, Abstract, 1:18-23, 19:24-27, FIGS. 3, 6, 14-15.

A. A POSA would have been motivated to combine Karlsson and Harbers with a reasonable expectation of success.

Karlsson discloses "directional light [clusters/sources]" with independently controlled angular positions for reducing glare towards other drivers. *Supra* Section XII; EX1003, ¶445. Harbers provides further detail on implementing "directional light [clusters/sources]" for different functions. EX1003, ¶445. So, it would have been obvious to a POSA designing an adaptive headlamp to implement Harbers's multiple directional beam segments—through either software or hardware—for different functions in Karlsson's system. *Id*. Indeed, Harbers discloses such an implementation to provide different spatial distributions for improved visibility in different driving situations (off-axis viewing, bends, narrow roads, motorways, etc.,

see EX1011, 5:14-26, 6:1-7, 6:27-7:32, 9:28-10:5, 13:5-7, FIGS. 1B, 2), thereby improving driver safety—an express purpose of Karlsson. EX1003, ¶¶445-446; EX1010, 1:10-13, 1:16-26, 4:17-21, 9:18-26.

First, including an additional control technique (software implementation) for Karlsson—Harbers's *known technique* of using multiple directional beam segments for different functions—would have added different functions to Karlsson's system for different driving situations, thereby increasing safety. EX1003, ¶447.

Indeed, Karlsson's techniques and system of controlling individual spotlight beams emphasize safety of all drivers. *Id*., ¶448; EX1010, 1:16-26, 4:17-21, 9:18-26. Karlsson recognizes the safety benefits of identifying "oncoming traffic" and other objects ("road signs etc.") in the field of view and adjusting a pattern and/or an intensity of light beam 7. EX1003, ¶449; EX1010, Abstract, 3:19-31, 12:19-35, 2:2-4, 5:16-32.

And Harbers's *technique* (software implementation), like Karlsson, seeks to enhance driver visibility, thereby increasing safety—using multiple directional beam segments for different functions. EX1011, 5:14-26, 6:1-7, 6:27-7:19, 8:10-18, FIGS. 1B-2; EX1003, ¶450. Opto-electronic elements 11-14 provide differently angled/aimed beam segments 6-6'-6"-6'", 7-7'-7"-7'" to form different spatial distributions. EX1011, 5:14-26, 6:1-7, 6:27-7:19, FIGS. 1B-2, 7:27-32, 7:1-17, 9:28-10:5, 13:5-7; EX1003, ¶¶112, 450.

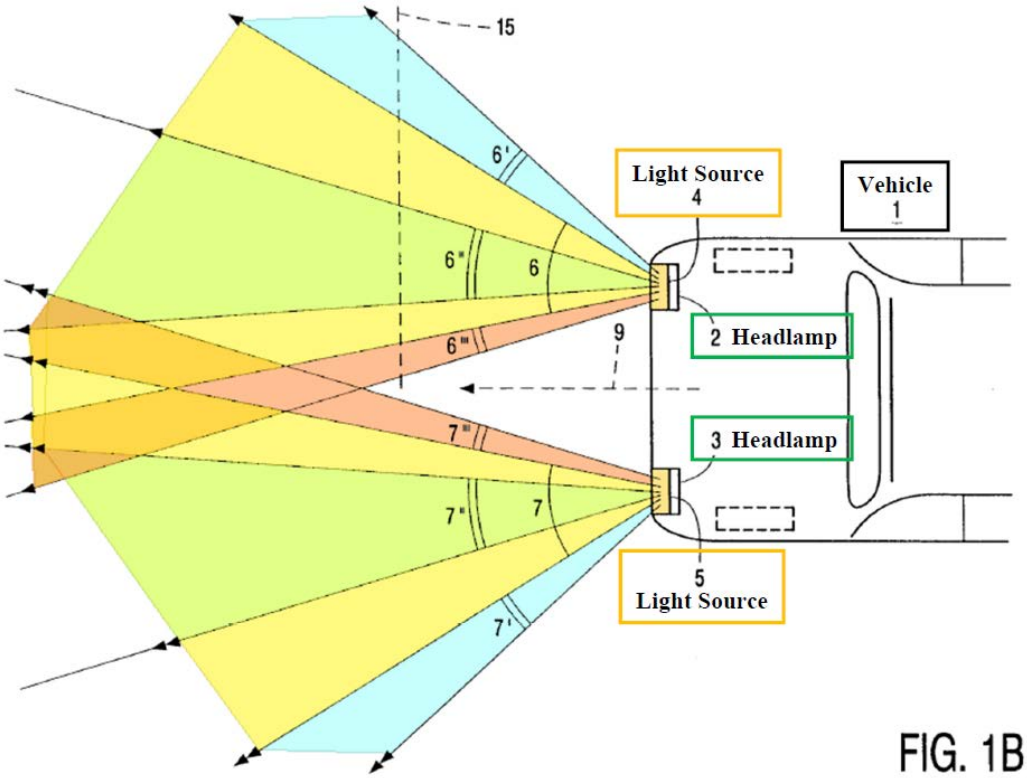

EX1011, FIG. 1B (annotated).

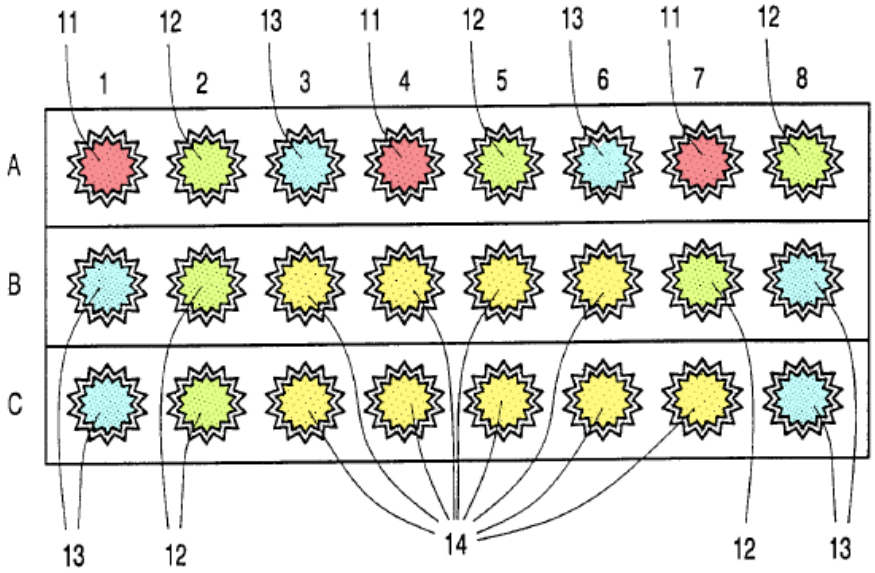

EX1011, FIG. 2 (annotated).

The additional of having multiple directional beam segments as in Harbers, implemented with Karlsson's control means 14/spotlight beams 34 (including light

modulator means 3), would have provided Karlsson's system with different spatial distributions for different driving situations beyond reducing glare for drivers, thereby improving safety. EX1003, ¶451. This would have been mere application of Harbers's known techniques (software implementation: multiple directional beam segments for different functions) to Karlsson's similar, known device (adaptive system with controllable spotlight beams), in the same way. *Id.*, ¶452; *KSR*, 550 U.S. at 417. Harbers's known technique is fully described along with its benefits (improved visibility for different functions, thereby increasing safety); thus, a POSA would have readily applied it to similar systems, such as Karlsson's, in the same ways. EX1003, ¶452.

A POSA would have had a reasonable expectation of success combining Harbers with Karlsson, for example, by simply modifying software instructions stored in memory of Karlsson's controller/processor to organize Karlsson's spotlight beams into multiple directional beam segments for different functions. *Id.*, ¶453. This would have been routine and well within a POSA's skill due to the similarities in Karlsson's and Harbers's adaptive systems—their common components were well-known and there would have been no limitations for a POSA to make such modification. *Id.*, ¶454.

Second, a POSA would have sought to incorporate *known components* (hardware implementation) of Harbers's opto-electronic elements 11-14 on a

"curved substrate" (with differently angled/aimed opto-electronic elements 11-14, *see* EX1011, 5:14-26, 6:1-7, 6:27-7:32, FIGS. 1B-2) into Karlsson's system (with lighting means 2, 3). EX1003, ¶455. Again, this would have provided different spatial distributions for different driving situations, improving visibility and thereby safety. *Id.*, ¶455.

Through its *system components*, Harbers, like Karlsson, seeks to enhance driver visibility and thereby increase safety. EX1011, 5:14-26, 6:1-7, 6:27-7:19, 8:10-18, FIGS. 1B-2; EX1003, ¶456. Opto-electronic elements 11-14 arranged on a "curved substrate," with different angles/aimings relative to the vehicle, provide beam segments 6-6'-6"-6"', 7-7'-7"-7"' for different driving situations. EX1011, 5:14-26, 6:1-7, 6:27-7:19, FIGS. 1B-2, 7:27-32, 9:28-10:5, 13:5-7; EX1003, ¶456.

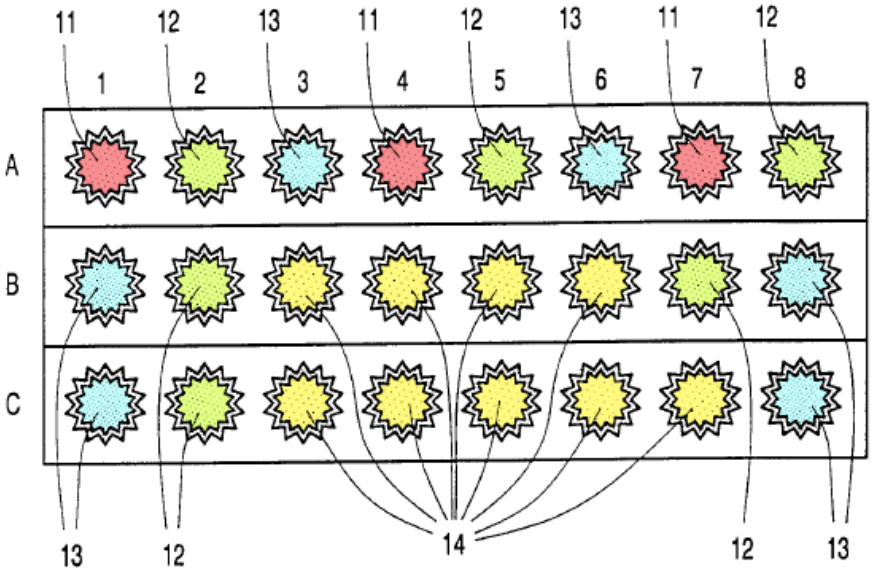

EX1011, FIG. 2 (annotated).

Like the software implementation, this hardware combination of Karlsson's lighting means 2, 3 and Harbers's differently angled/aimed opto-electronic elements 11-14 on a curved substrate, would have provided Karlsson's system with different spatial distributions for different driving situations, as in Harbers, thereby improving driver safety. EX1003, ¶457. This would have been merely combining prior-art elements or a simple substitution of one known element for another (Karlsson's lighting means 2, 3 on a flat substrate and Harbers's opto-electronic elements 11-14 on a curved substrate) according to known methods (disclosed in Karlsson and Harbers) to yield predictable results (improved visibility and safety). *Id.*, ¶457; *KSR*, 550 U.S. at 415-416.

A POSA would have had a reasonable expectation of success combining Harbers with Karlsson, for example, by simply modifying the flat substrate of Karlsson's lighting means 2, 3 with Harbers's curved substrate to provide multiple directional light clusters/sources. EX1003, ¶458. This would have been routine and well within a POSA's skill due to the similarities in Karlsson's and Harbers's adaptive systems—their common components were well-known and there would have been no limitations for a POSA to make such modifications. *Id.*, ¶¶459-460.

B. Claims 26 and 65

1. [26.P]/[65.P]

[65.P] is identical to [26.P]. EX1003, ¶¶461-462. Karlsson's headlight system for a car 56 provides an adaptive light beam 7. EX1010, 20:16-32, FIGS. 1, 3, 16,

SPERO EX. 2005

2:4-6, 9:24-25, Abstract, 8:29-35, 9:3-33; EX1003, ¶463. Also Karlsson discloses "a plurality of *controllable spotlight beams*" and "the *field of view* of the light-sensitive sensors and the illumination field of the light beam to be emitted, will *coincide*." EX1010, 3:27-31, 4:26-31, FIGS. 3, 6, 14, 14:1-15, 11:25-28, 19:19-33; EX1003, ¶¶463-464.

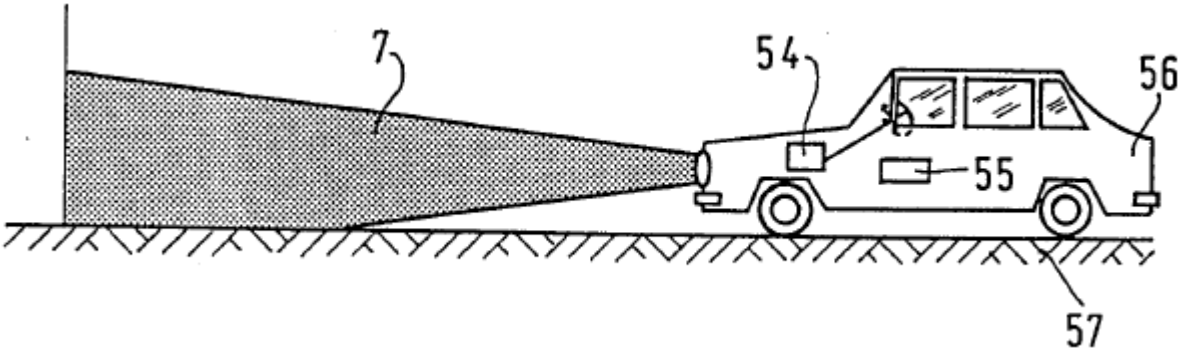

EX1010, FIG. 16.

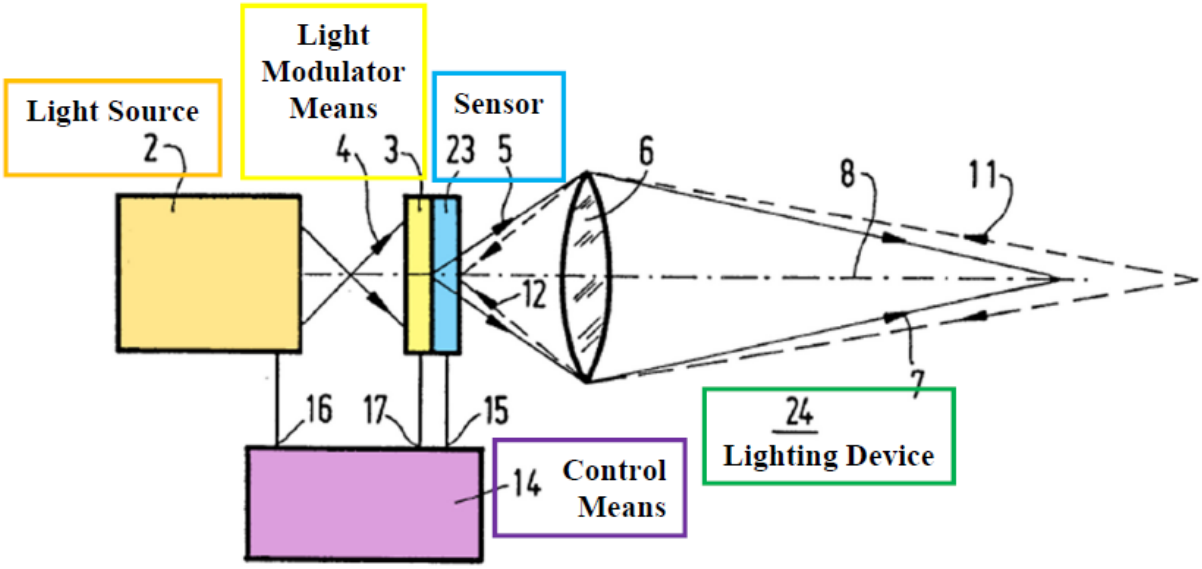

EX1010, FIG. 3 (annotated).

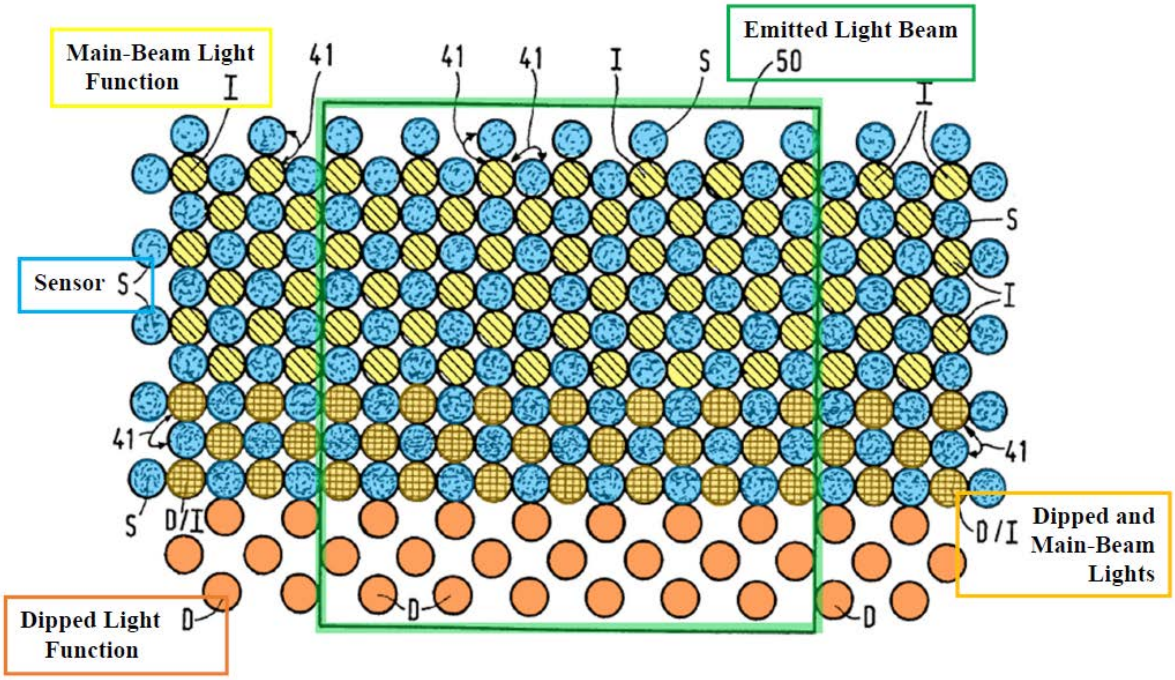

EX1010, FIG. 14 (annotated).

2. [26.1]/[65.1]

The features of [65.1] are included in [26.1]. EX1003, ¶¶465-467. Karlsson's "*light-sensitive sensors* 9 and 23…*determin[e]* the direction and the intensity of the *detected light 11*." EX1010, 12:19-24, FIGS. 3, 14, 9:6-17, 19:18-19, 2:2-4, 5:28-32; EX1003, ¶¶468-469.

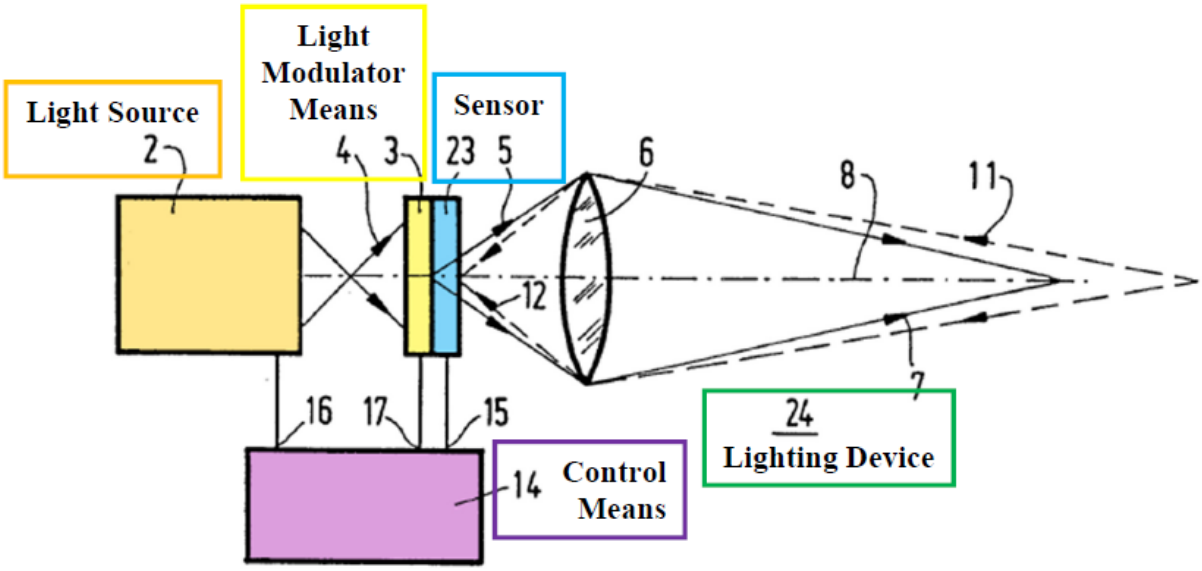

EX1010, FIG. 3 (annotated).

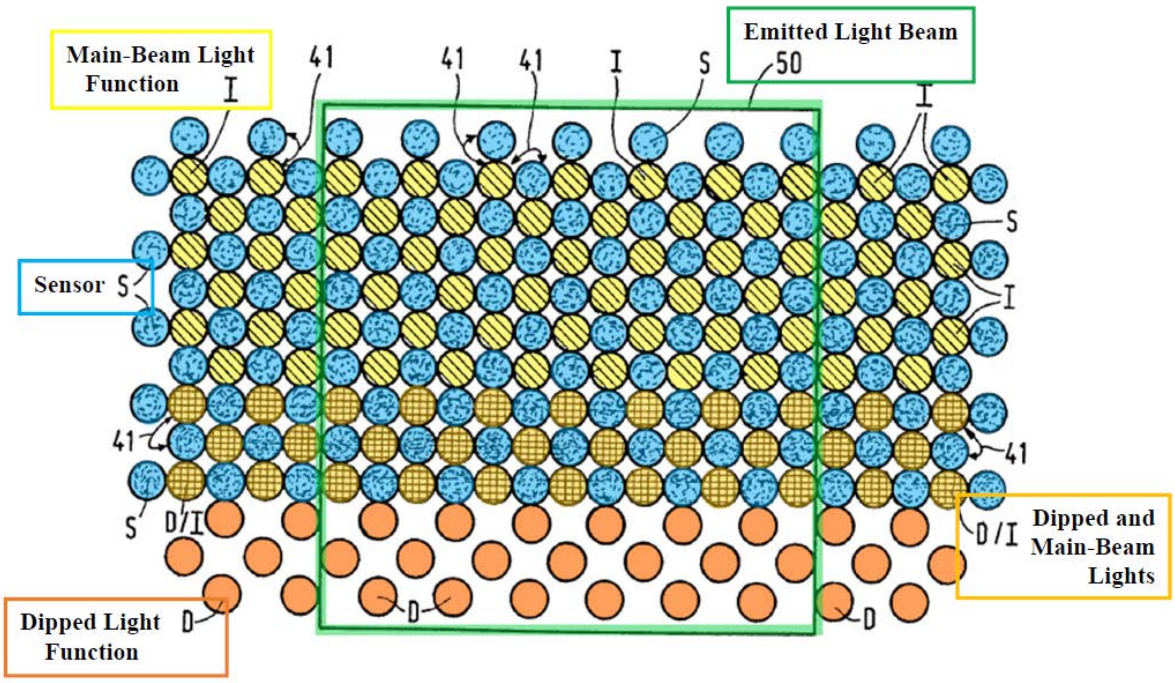

EX1010, FIG. 14 (annotated).

3. [26.2]/[65.2]

The features of [65.2] are included in [26.2]. EX1003, ¶¶470-472. Karlsson's "light-sensitive sensor…*detects* the distribution and the intensity of light in the *area*

ahead of a vehicle" for "*detecting* light from *oncoming traffic*." EX1010, 2:2-4, Abstract, FIGS. 3, 14, 3:19-20, 12:19-24, 5:16-32, 3:27-31; EX1003, ¶473. The incident light data is "data indicating at least [one of one or more other vehicles/a second vehicle]" (oncoming) as recited in [26.4]/[65.4], which is "predefined as relevant to a determination of illumination," as additionally recited in [26.4], because Karlsson processes incident light 11 "into output signals…to *control*…*light beam 7*." EX1010, 9:9-17, 12:19-24, FIGS. 3, 14-15; EX1003, ¶¶473-474.

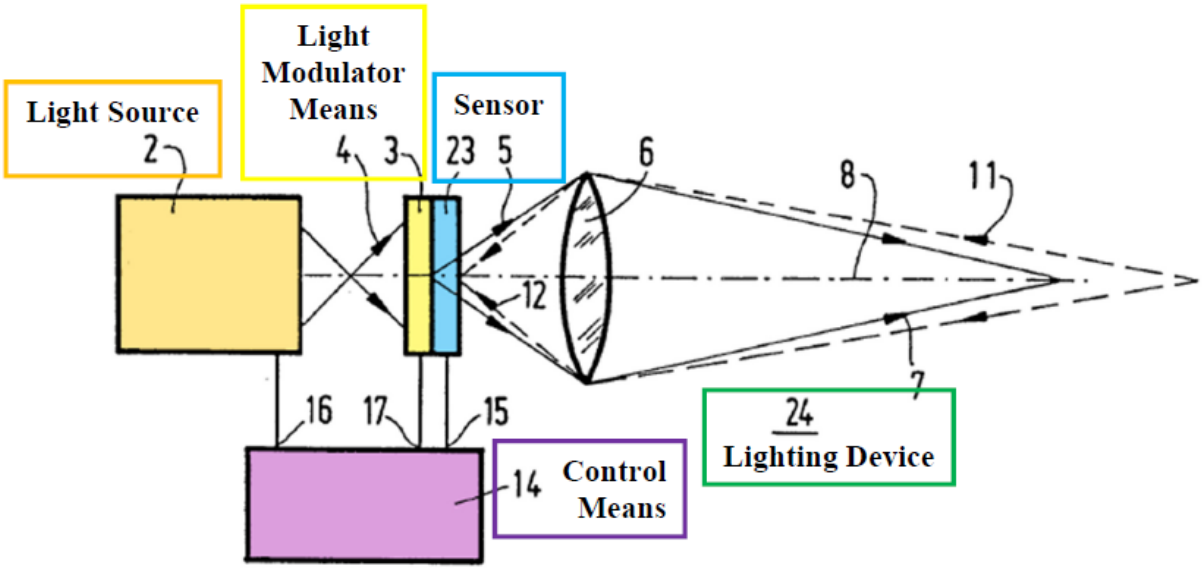

EX1010, FIG. 3 (annotated).

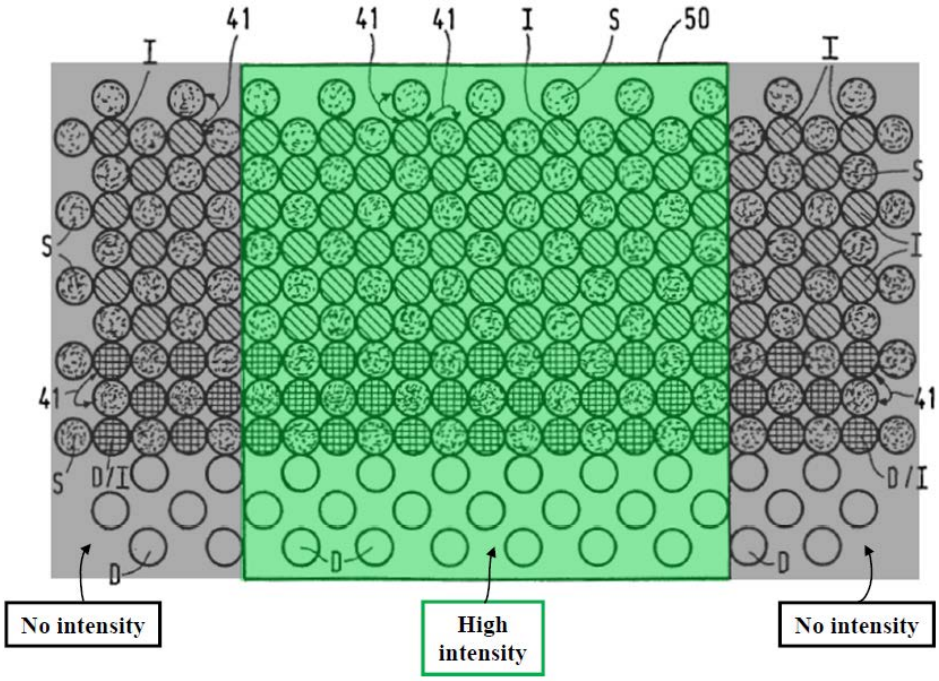

EX1010, FIG. 14 (annotated).

4. [26.3]

Karlsson discloses "*incident light 11* on the *light-sensitive sensor 9*…is *processed* into an *electric control signal* on input 15 of the *control means 14*." EX1010, 9:9-17, FIGS. 3, 14-15, 3:27-31, 14:26-30, 20:12-32, 21:36-22:4; EX1003, ¶¶475-476. Thus, incident light data from the sensor determines "illumination requirements for the field-of-view." EX1010, 9:9-17, 12:19-24, FIGS. 14-15; EX1003, ¶¶476-477.

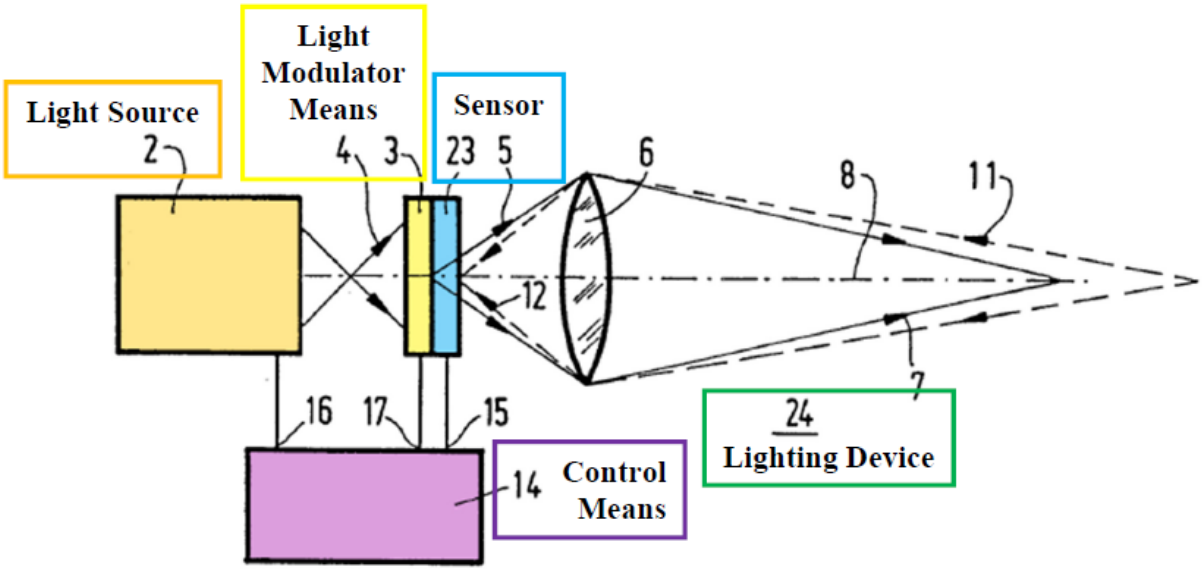

EX1010, FIG. 3 (annotated).

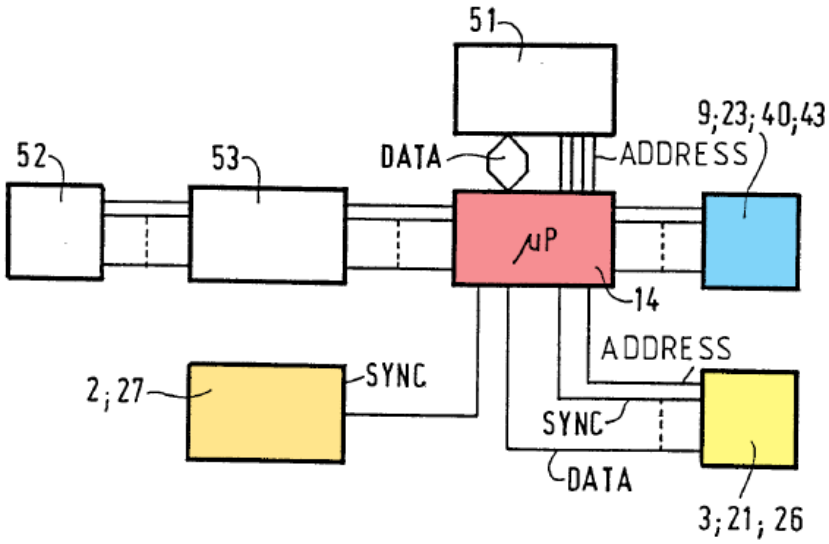

EX1010, FIG. 15 (annotated).

5. [26.4]/[65.3]

The features of [65.3] are included in [26.4]. EX1003, ¶¶478-480. Karlsson discloses "*incident light 11* on the *light-sensitive sensor 9*…[is] input 15 of the *control means 14*" and "light beam 7…controlled in such a manner that *no light at*

all or light having a low intensity is emitted in…directions from which light is detected." EX1010, 9:6-26, FIGS. 3, 14-15, 23:17-22, 5:16-23, 5:28-32, 2:7-9, 3:27-31, 14:26-30, 17:21-24, 20:12-32, 21:36-22:4; EX1003, ¶481. Thus, the processor processes the inputted incident light data, identifies a vehicle within the headlight's field-of-view, and determines an area to be suppressed within a subsection of the field-of-view (e.g., shaded area with no intensity). EX1010, 9:9-17, 12:19-24, FIGS. 14-15; EX1003, ¶¶481-482.

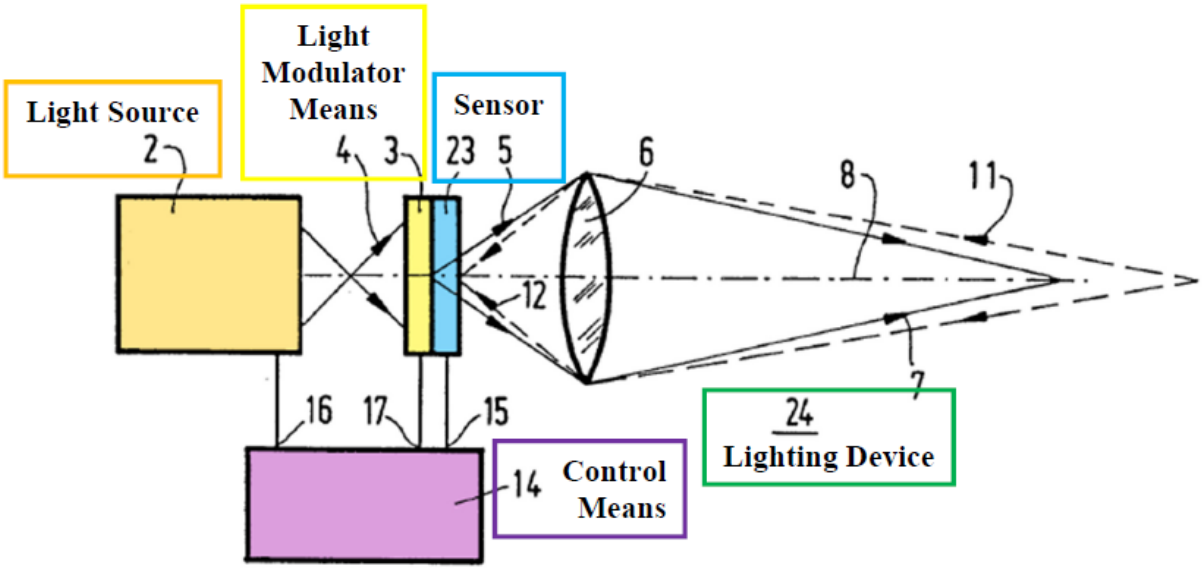

EX1010, FIG. 3 (annotated).

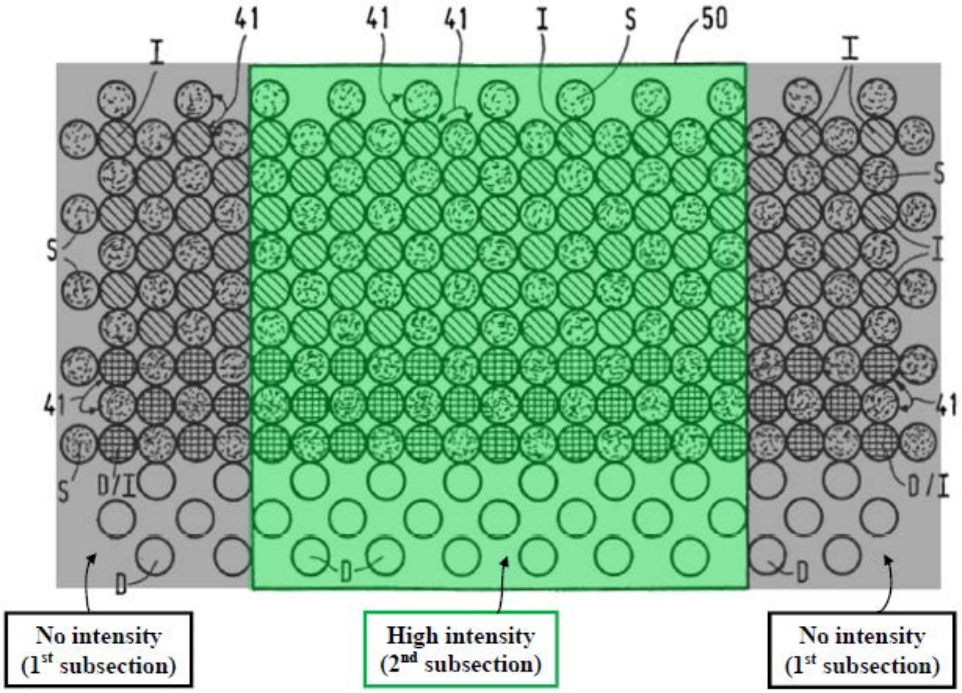

EX1010, FIG. 14 (annotated).

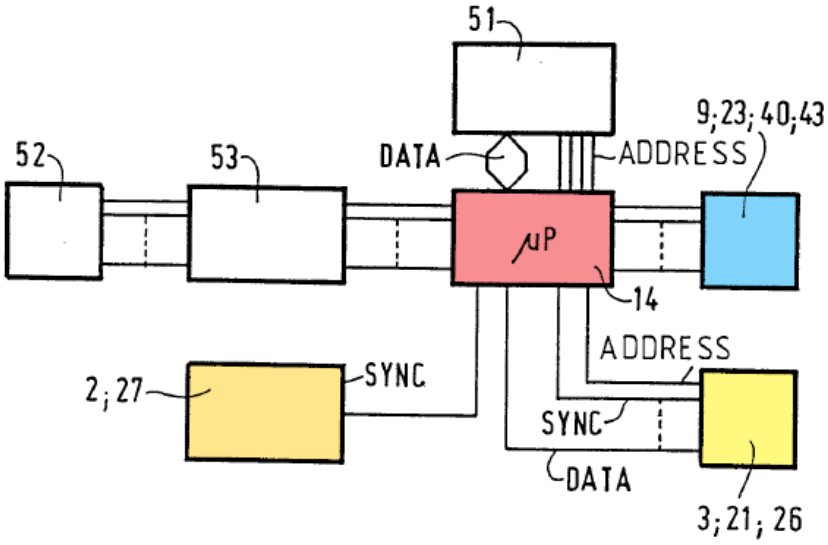

EX1010, FIG. 15 (annotated).

6. [26.5]/[65.4][6]

The features of [65.4] are included in [26.5]. EX1003, ¶¶483-485. Karlsson discloses "*pattern* and…*intensity* are *automatically adjusted*…permitting a light intensity…generally *higher than that of conventional dipped headlights*." EX1010, Abstract, FIGS. 3, 14-15, 19:26-33, 2:7-9, 14:26-30, 5:16-32, 9:9-17; EX1003, ¶486. Karlsson thus determines illumination for a different subsection outside of the detected vehicle (e.g., high intensity area to either side of first subsection). EX1010, 5:16-23, 9:9-17, 12:19-24, FIGS. 14-15; EX1003, ¶¶486-487.

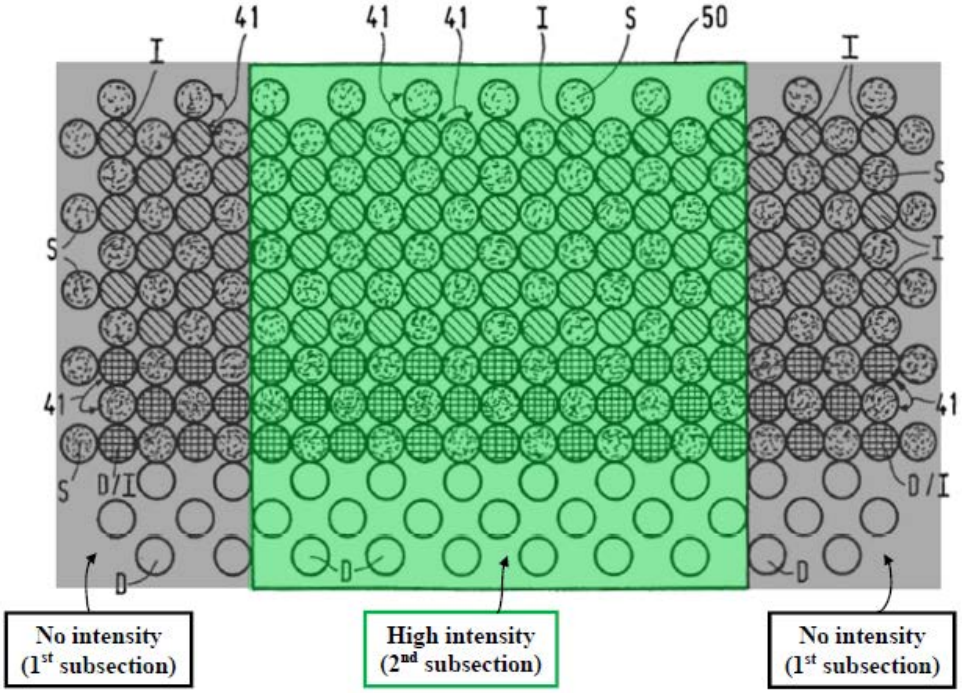

EX1010, FIG. 14 (annotated).

[6] [65.5]-[65.10] are addressed in Section XII.C.

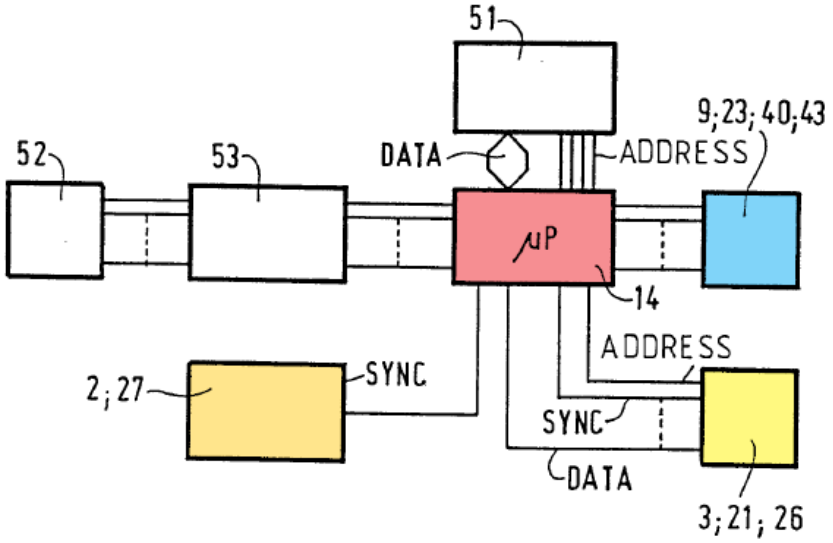

EX1010, FIG. 15 (annotated).

7. [26.6]

Karlsson discloses [26.6]. *Supra* Sections XII/XII.A/XII.B.5/XII.B.6; EX1003, ¶¶488-489. Karlsson's control means determines a control strategy (e.g., control signal) to "selectively adjust the light *intensity* of a respective spotlight beam 34, in response to a *control signal* from sensor means 23, so as to provide a desired lighting pattern." EX1010, 14:26-30, FIGS. 3, 14-15, 9:6-26, 23:17-22, 5:28-32, 17:21-24, 20:12-32, 21:36-22:4, 2:7-9, 3:27-31; EX1003, ¶489. Thus, Karlsson's controller determines a control strategy for controlling the direction and illumination of spotlight beams to "create an output headlight beam meeting the determined illumination requirements." EX1010, 9:9-17, 12:19-24, FIGS. 14-15; EX1003, ¶489.

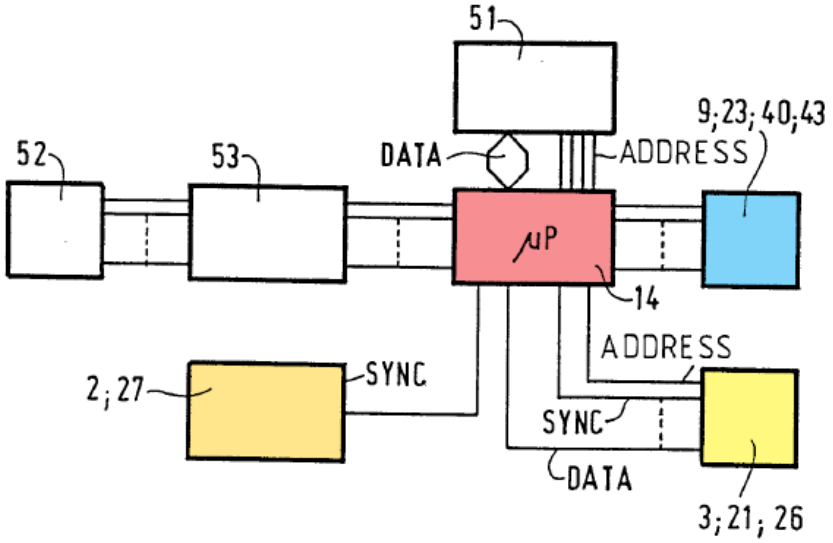

EX1010, FIG. 15 (annotated).

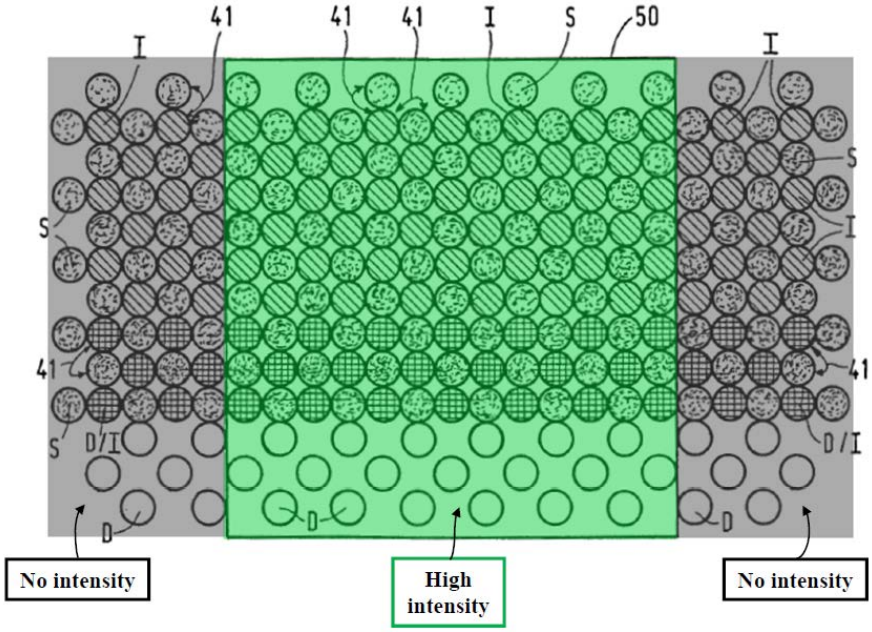

EX1010, FIG. 14 (annotated).

Also, Karlsson discloses "*lighting means 2, 3…controlled by control means 14*…in such a manner that…a *desired pattern* and a *desired intensity* is emitted" and "*spotlight beams 34* may also be made up of…*light modulators* which can be controlled to transmit light…for a *group* of spotlight beams." EX1010, 9:9-17, 14:1-

15, FIGS. 3, 6, 14-15, 11:25-28, 19:29-33, 4:26-31, 20:12-32, 21:36-22:4; EX1003, ¶490. Each spotlight beam is a directional "cluster" or "source," having its own independent *direction* (angle/aiming), that combines to form the headlamp beam; so the combination of Karlsson's spotlight beams form at least one directional light cluster/source to provide illumination in desired subsections. *Id.*, 4:26-31, 14:1-15, FIGS. 6, 14; EX1003, ¶490. Karlsson also discloses clusters with at least two spotlight beams. EX1010, 14:1-9, 14:12-15, 14:26-30, FIGS. 6, 14; EX1003, ¶¶491-493.

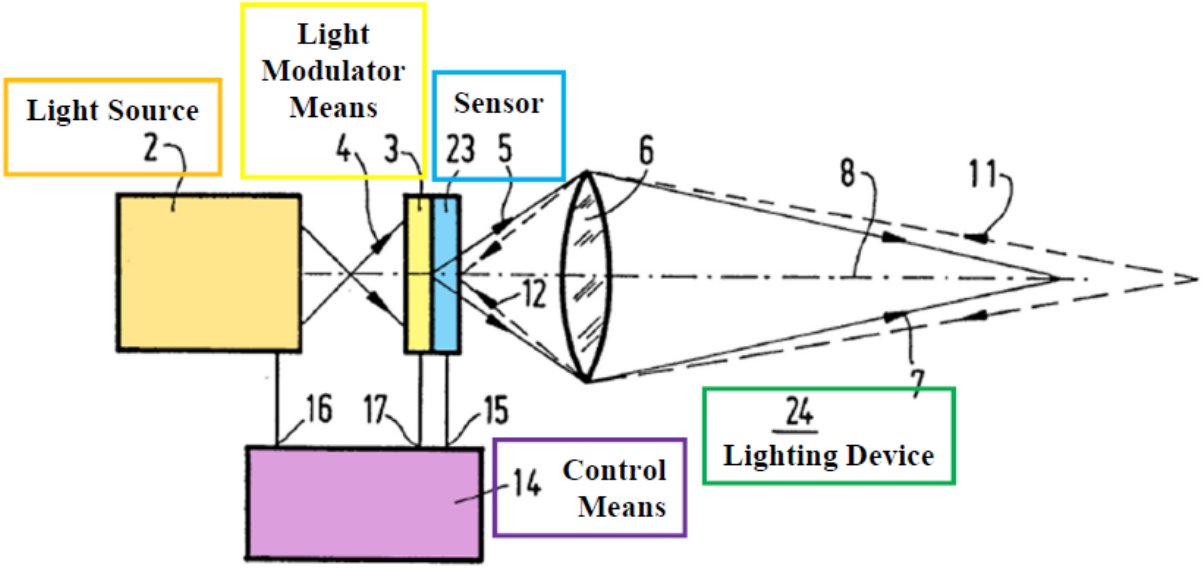

EX1010, FIG. 3 (annotated).

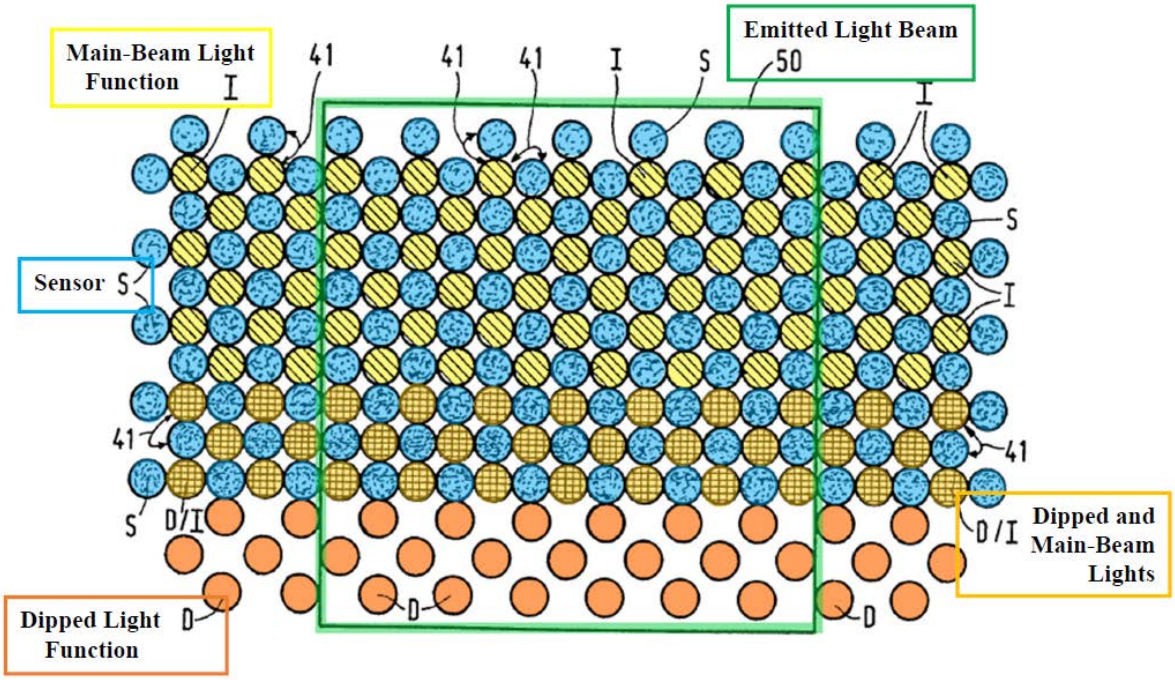

EX1010, FIG. 14 (annotated).

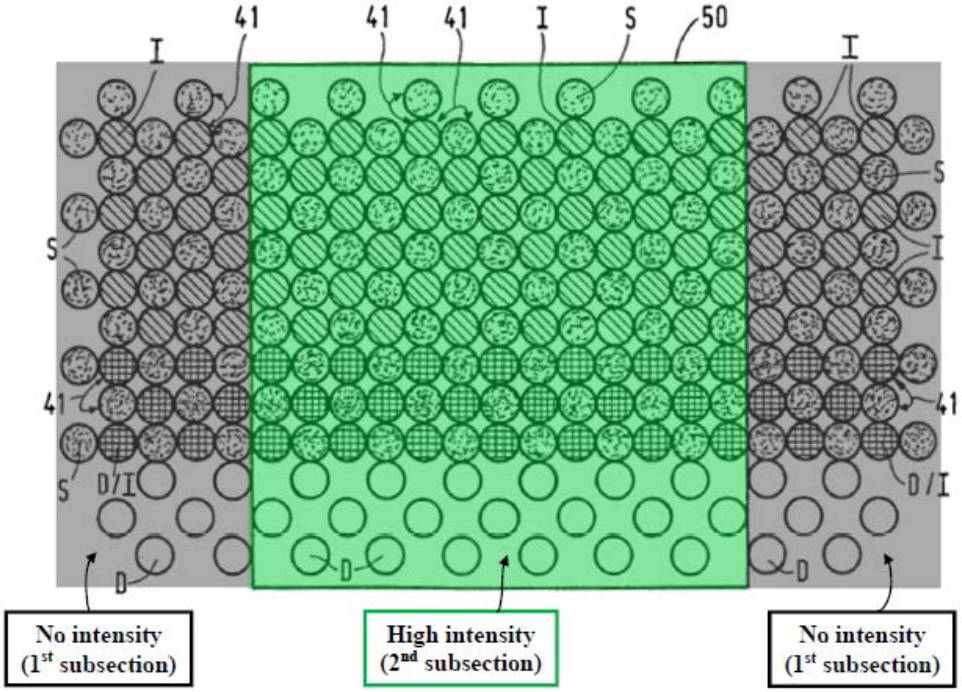

EX1010, FIG. 14 (annotated).

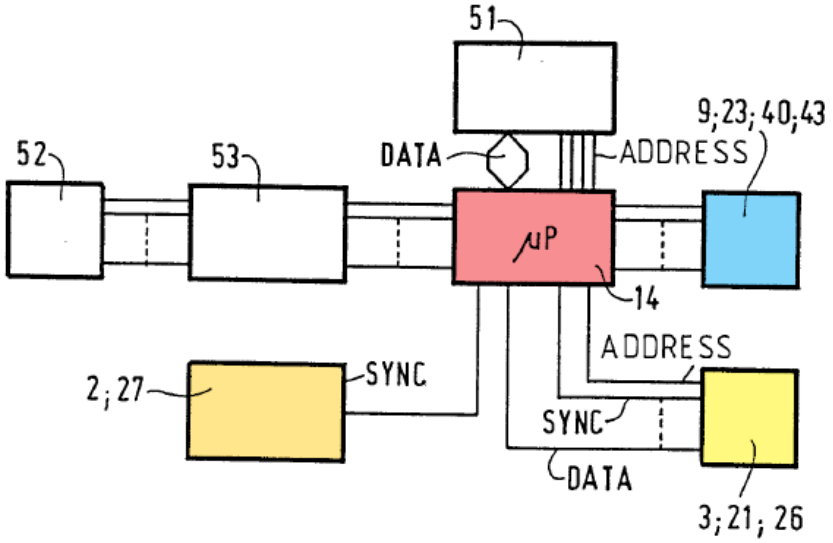

EX1010, FIG. 15 (annotated).

Should Patent Owner allege, incorrectly, that Karlsson does not disclose [26.6], it would have been obvious in view of Harbers. EX1003, ¶¶494, 496-513. *Supra* Section XII.A; EX1003, ¶¶445-459, 494.

Harbers discloses an array of opto-electronic elements 11-14 on a curved substrate that emits light beam segments 6-6'-6"-6'", 7-7'-7"-7'" (directional light clusters) for different functions. EX1011, 5:14-26, 6:1-7, 6:27-7:19, FIGS. 1B-2, 7:27-32; EX1003, ¶495. For example, Harbers's beam segment 6, 7 is a "wide…passing beam" (first cluster), beam segment 6', 7' illuminates "the shoulder of the road" (second cluster), and beam segment 6", 7" illuminates "the center of the road" (third cluster). EX1011, 7:1-17, FIG. 1B; EX1003, ¶495.

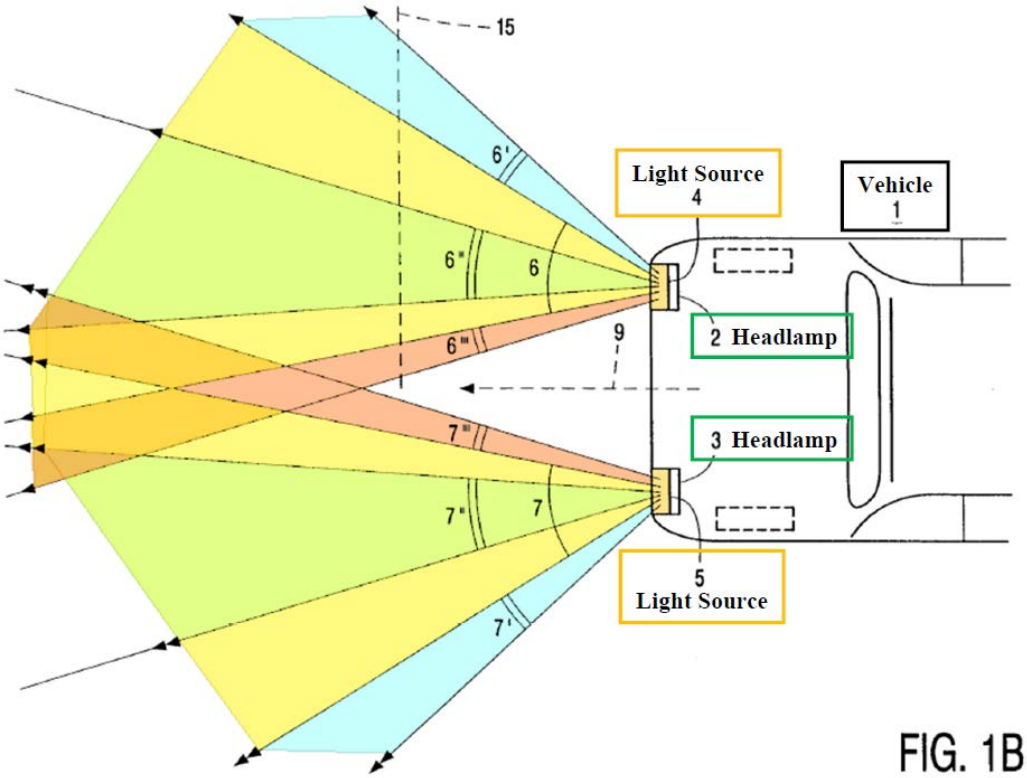

EX1011, FIG. 1B (annotated).

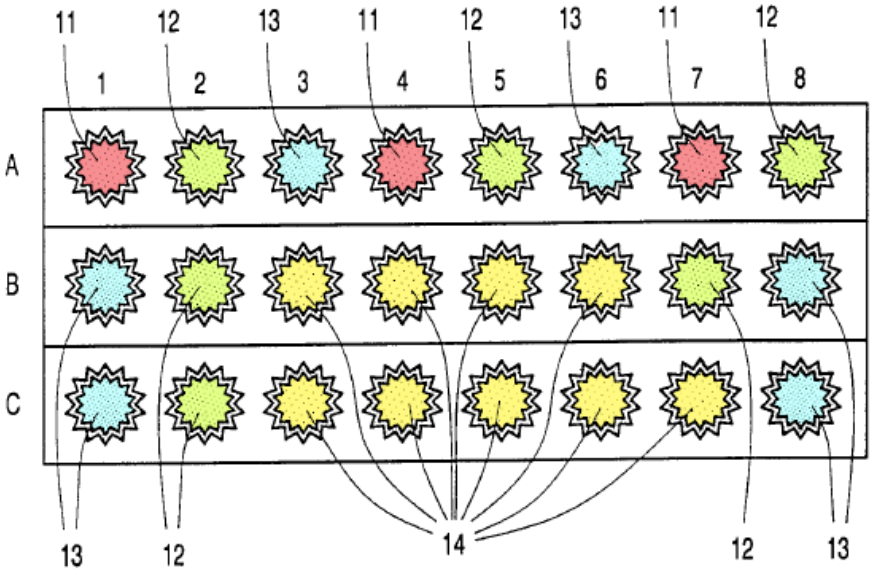

EX1011, FIG. 2 (annotated).

8. [26.7]

Karlsson discloses "light beam 7…*optimally adapted* to the road and to the ambient light" and "permitting a light intensity which is generally *higher than that of conventional dipped headlights*." EX1010, 9:9-26, Abstract, FIGS. 3, 14-15, 19:26-33, 2:7-9, 1:18-23, 14:26-30, 5:16-32; EX1003, ¶¶514-515. Thus, light beam 7 is shaped to provide "high beam illumination" in a second subsection (e.g., high intensity area). EX1003, ¶¶515-516.

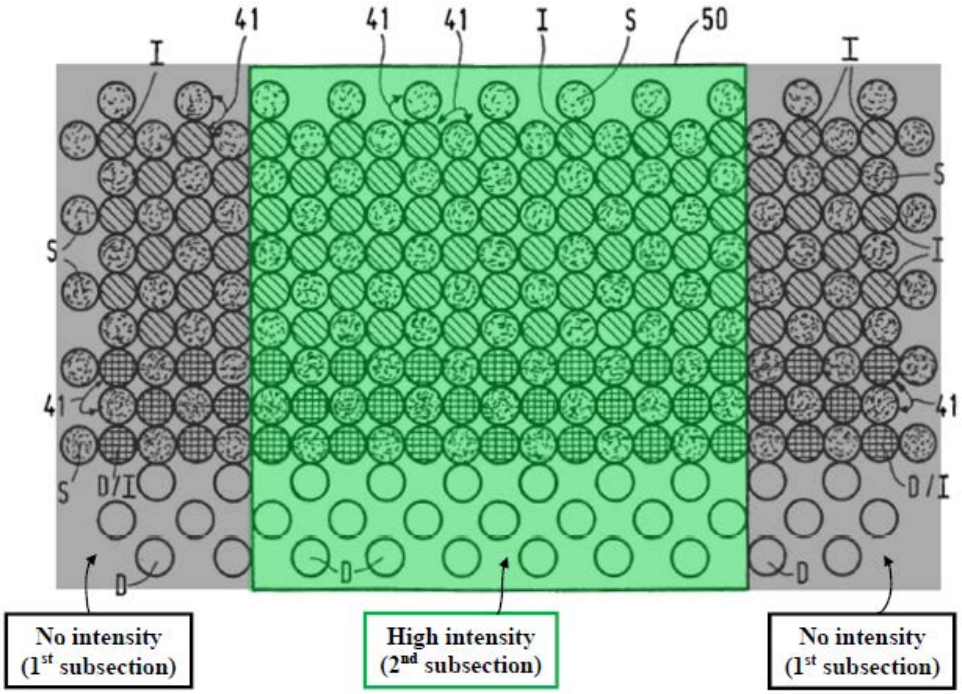

EX1010, FIG. 14 (annotated).

9. [26.8]

Karlsson discloses "light beam 7…controlled in such a manner that *no light at all or light having a low intensity* is emitted in those directions from which light is detected…[thus] *glaring or blinding of oncoming traffic* is effectively *prevented*."

EX1010, 9:9-26, FIGS. 3, 14-15, 19:24-25, 2:7-9, 5:30-32, 14:26-30, 5:16-23, 3:27-31; EX1003, ¶¶517-518. Karlsson thus "mitigat[es] glaring" to the detected vehicle. EX1010, 9:11-26, 2:7-9, 5:28-32; EX1003, ¶¶518-519.

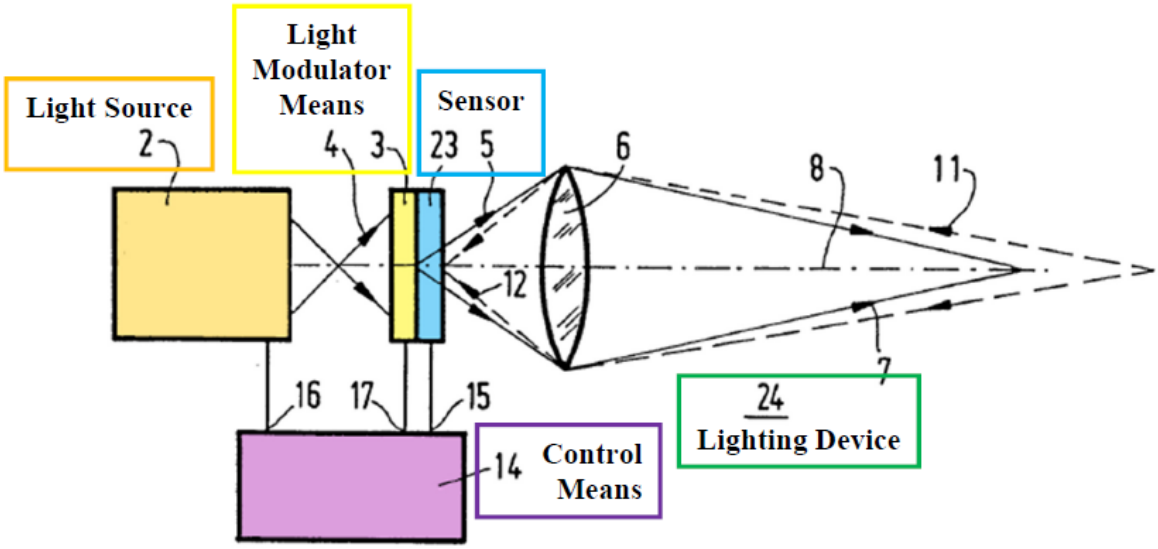

EX1010, FIG. 3 (annotated).

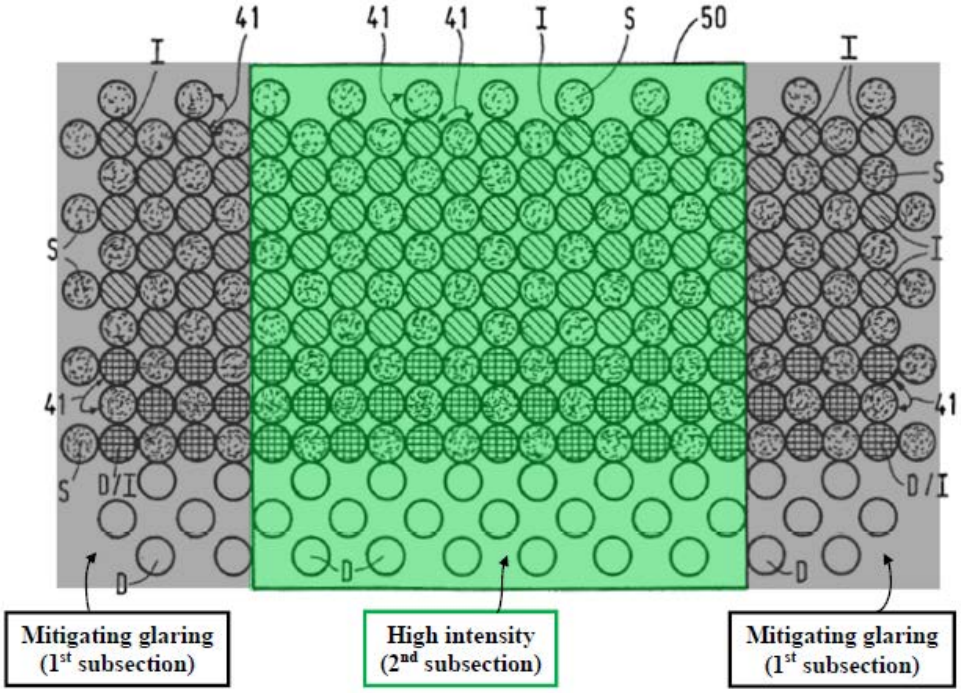

EX1010, FIG. 14 (annotated).

10. [26.9]

Karlsson discloses "*lighting means 2, 3…controlled by control means 14*, such that the *incident light 11* on the *light-sensitive sensor 9*…is *processed* into an *electric control signal*…[and] *processed* by the control means 14 into *output signals at outputs 16, 17* thereof, so as to *control the lighting means 2, 3*." EX1010, 9:9-17, FIGS. 3, 14-15, 20:12-32, 21:36-22:4; EX1003, ¶520. Karlsson/Karlsson-Harbers discloses "directional light clusters." *Supra* Section XII.B.7; EX1003, ¶520. Thus, Karlsson's controller sends output signals 16, 17 to lighting means 2, 3 to adjust the pattern and intensity of spotlight beams in the array to "implement[] the control strategy" and "operate the light-clusters." EX1010, 9:9-17, FIGS. 14-15; EX1003, ¶¶520-521.

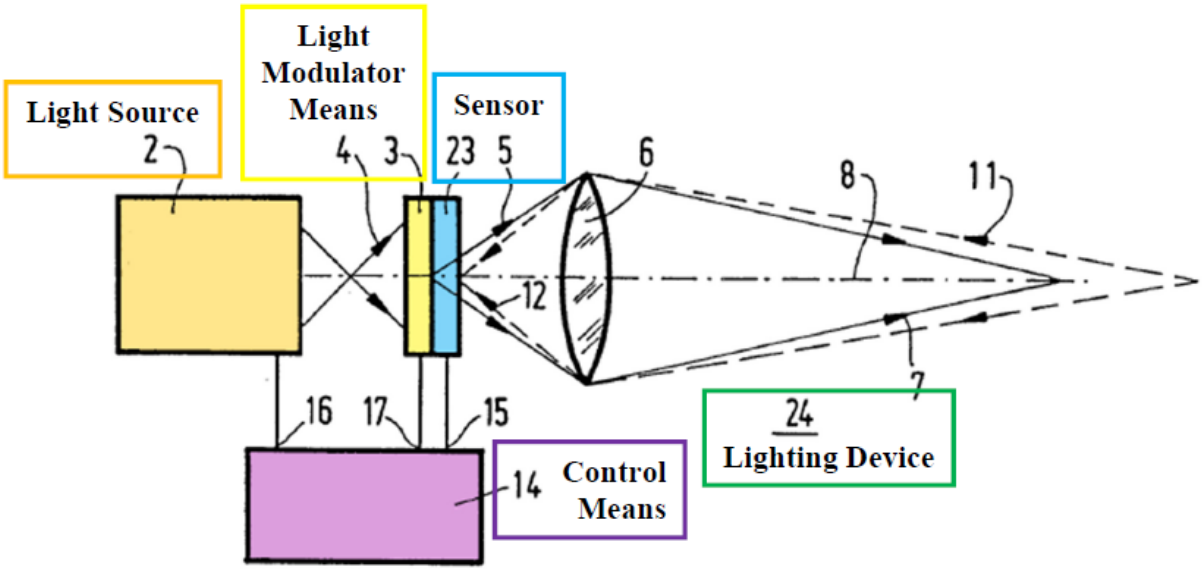

EX1010, FIG. 3 (annotated).

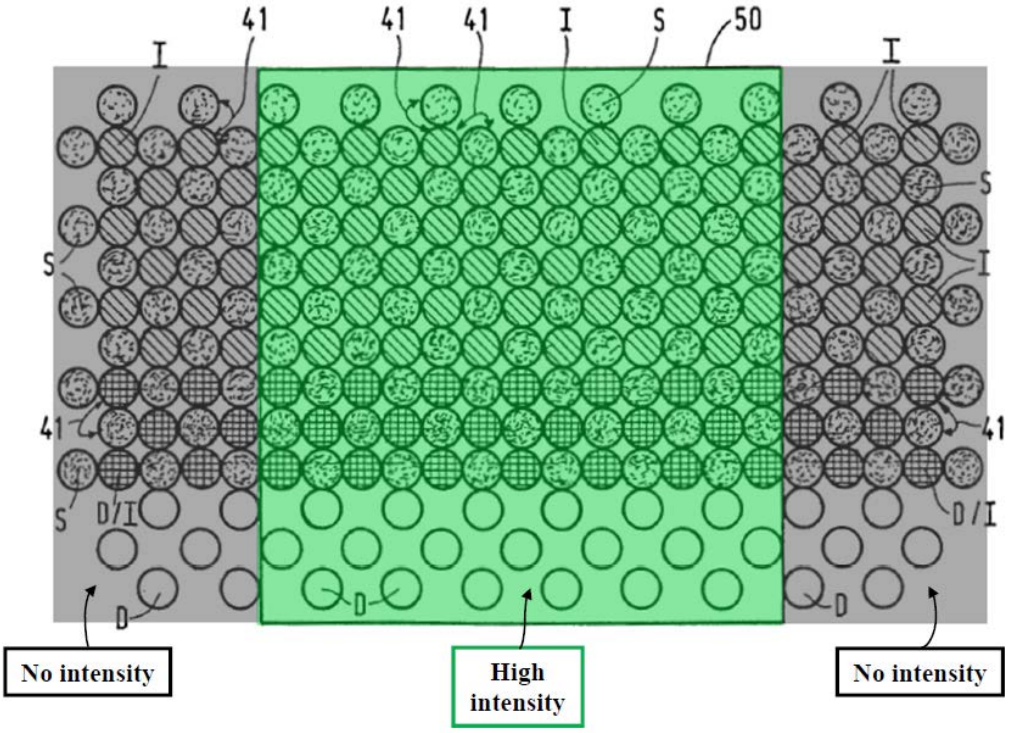

EX1010, FIG. 14 (annotated).

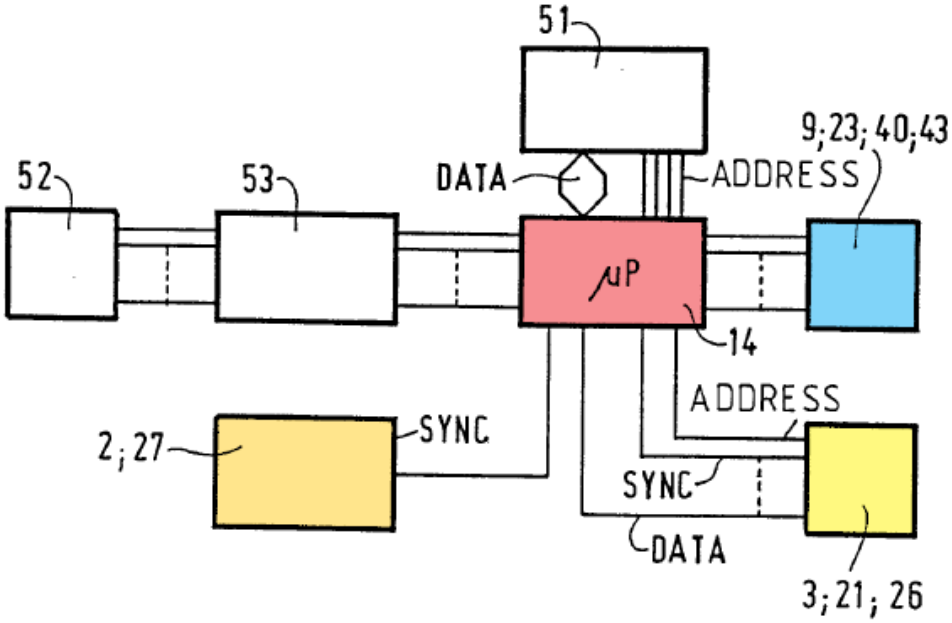

EX1010, FIG. 15 (control circuitry) (annotated).

11. [26.10]

[26.10] implements [26.9]. Karlsson discloses "*lighting means 2, 3…controlled by control means 14*, such that the *incident light 11* on the *light-sensitive sensor 9*…is *processed* into an *electric control signal*…[and] *processed* by the control means 14 into *output signals at outputs 16, 17* thereof, so as to *control the lighting means 2, 3*." EX1010, 9:9-17, FIGS. 3, 14-15, 20:12-32, 21:36-22:4; EX1003, ¶522. Thus, Karlsson's lighting means 2, 3 (via light modulator means 3) receives output (control) signals 16, 17 from control means to lighting means 2, 3 to "control[] the light clusters…to collectively emit the headlight beam." EX1010, 9:9-17, FIGS. 14-15; EX1003, ¶¶522-523.

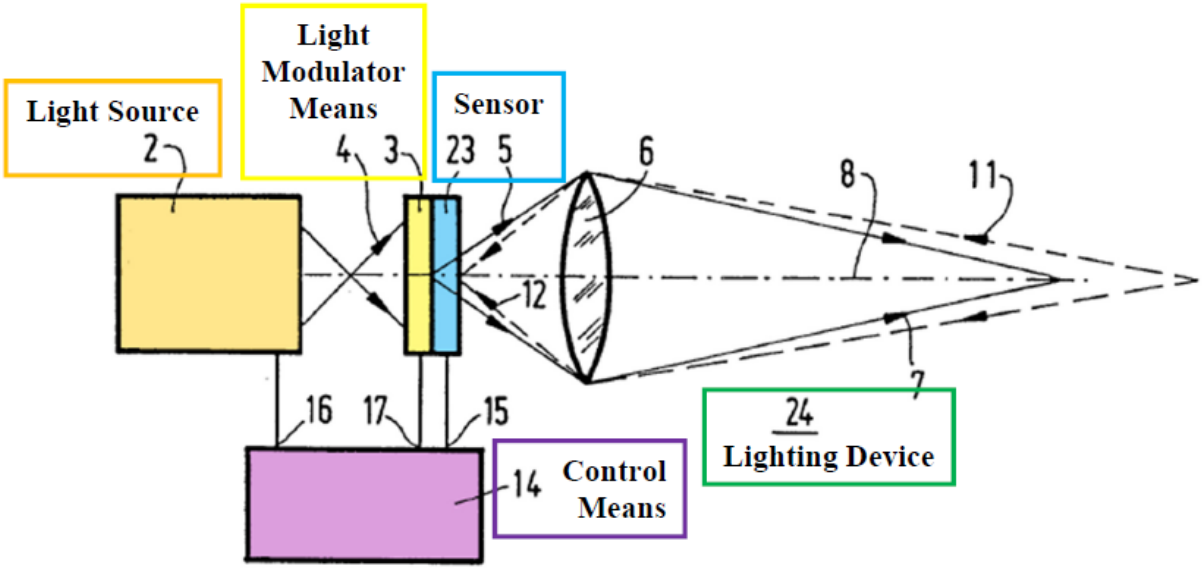

EX1010, FIG. 3 (annotated).

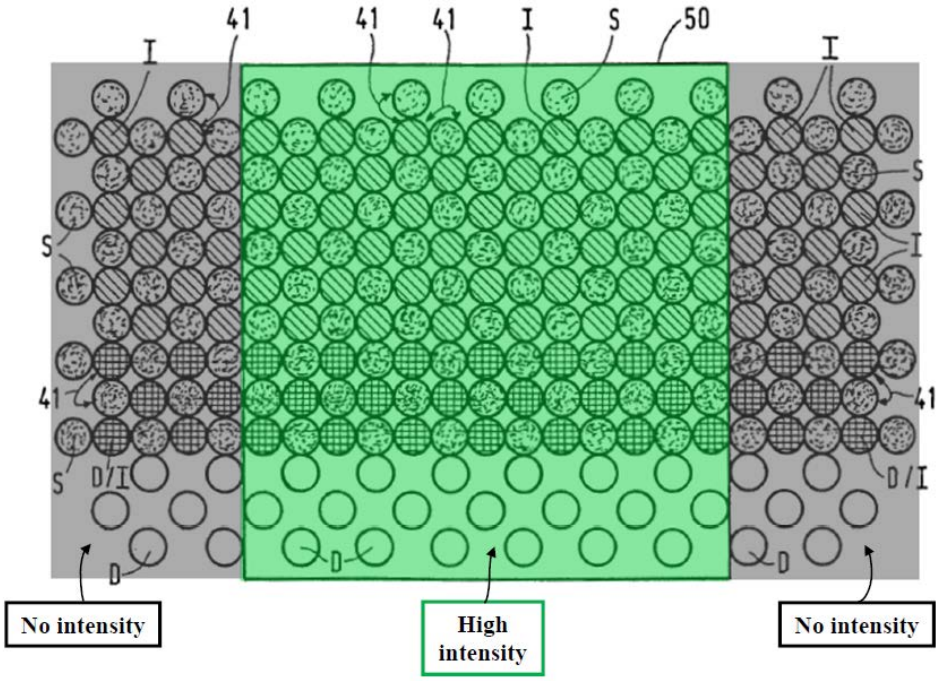

EX1010, FIG. 14 (annotated).

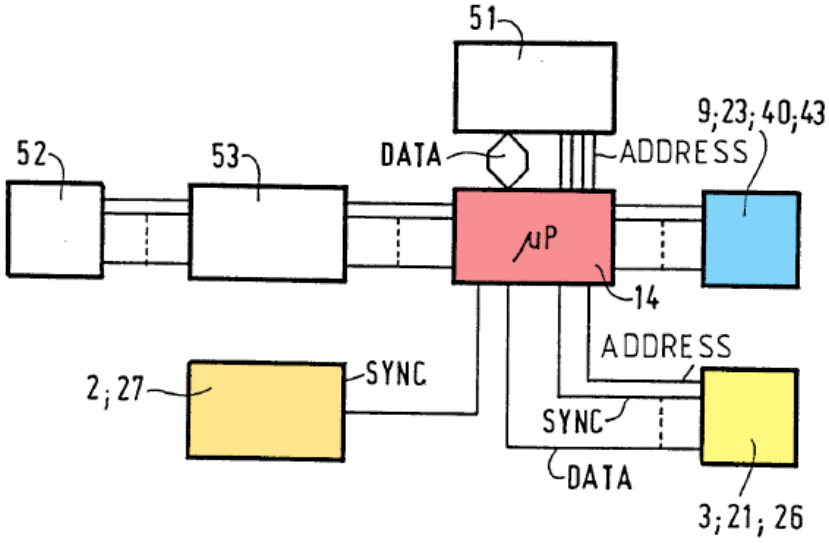

EX1010, FIG. 15 (control circuitry) (annotated).

C. Additional Elements of Independent Claim 65

[65.P]-[65.4] are addressed above in Section XII.B. EX1003, ¶524.

1. [65.5]

Karlsson discloses illumination in shaded areas is "controlled in such a manner that *no light at all or light having a low intensity* is emitted in those directions from which light is detected…[thus] *glaring or blinding of oncoming traffic* is effectively *prevented*." EX1010, 9:18-26, FIGS. 3, 14-15, 23:17-22, 19:24-25, 5:28-32, 2:7-9, 5:30-32, 9:6-17, 14:26-30, 5:16-23, 3:27-31; EX1003, ¶¶525-526. Thus, Karlsson's processor "determin[es] an illumination level" for the first subsection (shaded area). EX1003, ¶¶526-527.

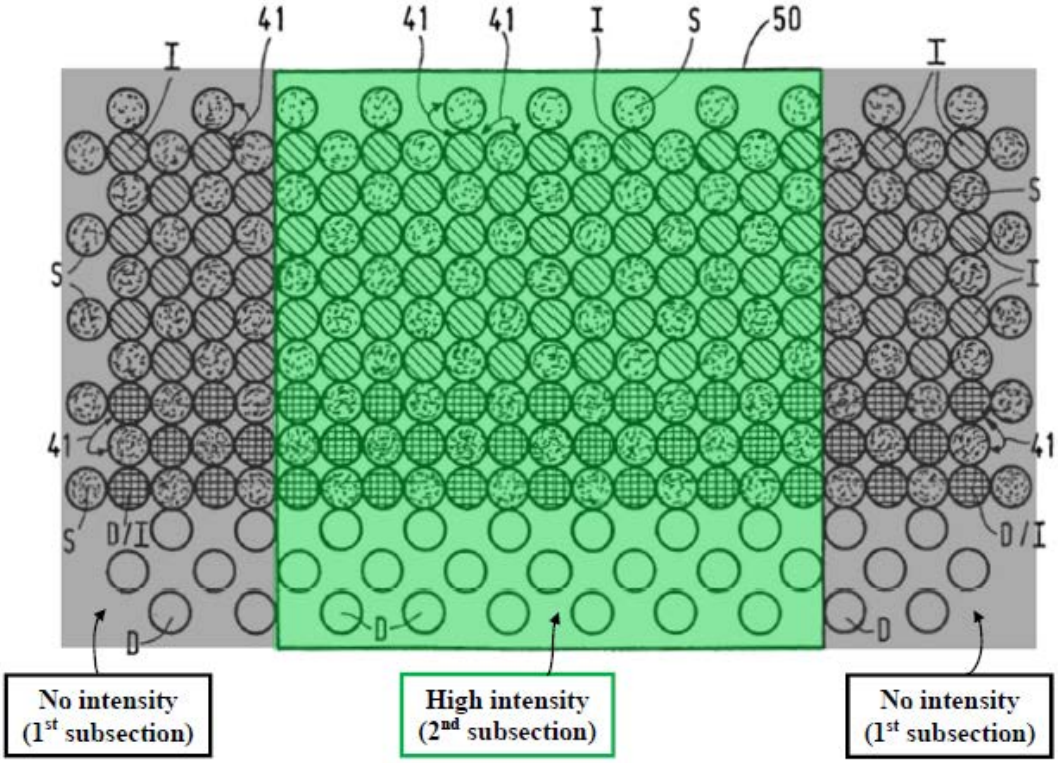

EX1010, FIG. 14 (annotated).

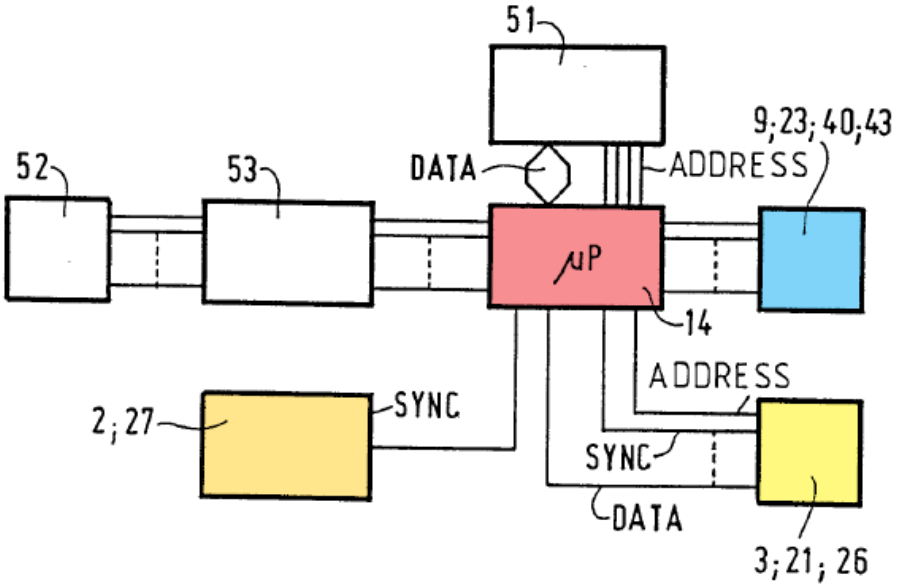

EX1010, FIG. 15 (annotated).

2. [65.6]

Karlsson discloses [65.6]. *Supra* Section XII; EX1003, ¶¶528-529; EX1010, 19:24-27, 1:27-29, 9:9-26, 2:7-9, 14:26-30, 5:16-32, 20:12-32, 21:36-22:4, Abstract, FIGS. 3, 14-15. A POSA would have understood that Karlsson's headlight includes a "predefined" illuminance, for example, a "dipped" illuminance. EX1003, ¶529.

The first subsection (shaded area, e.g., outside emitted light beam 50) is illuminated "below a first predefined illuminance" because it receives "no light at all or light having a low intensity," which is *below* the dipped illuminance. EX1003, ¶¶530-531; EX1010, 9:19-26, FIG. 14.

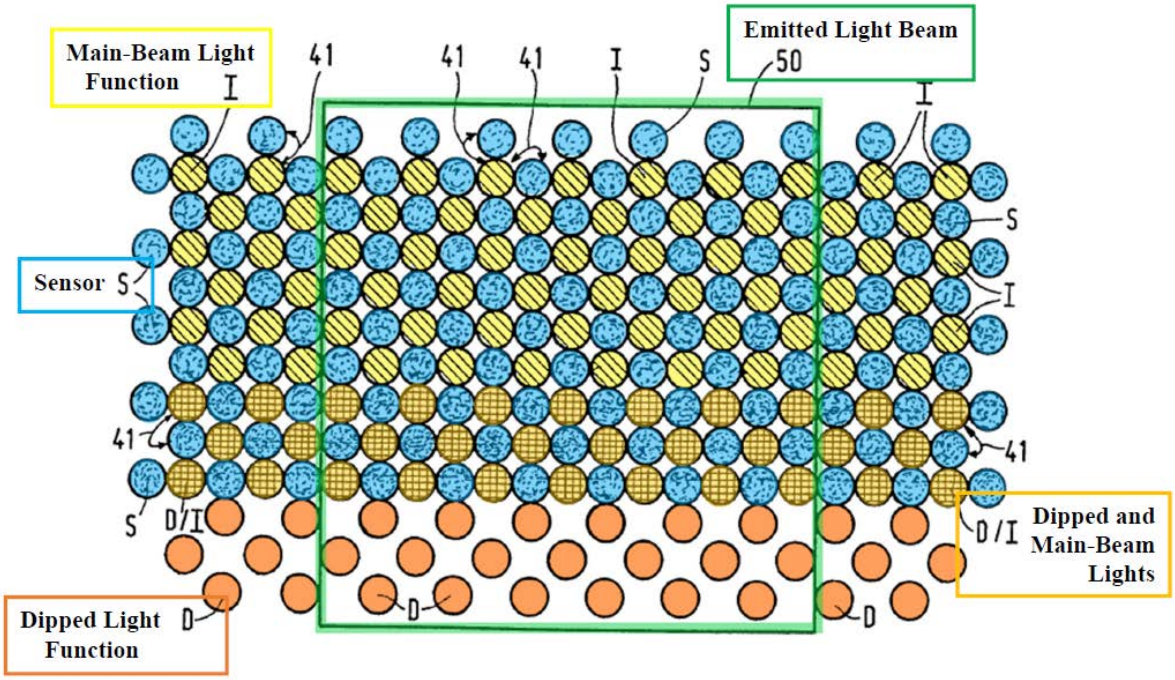

EX1010, FIG. 14 (annotated).

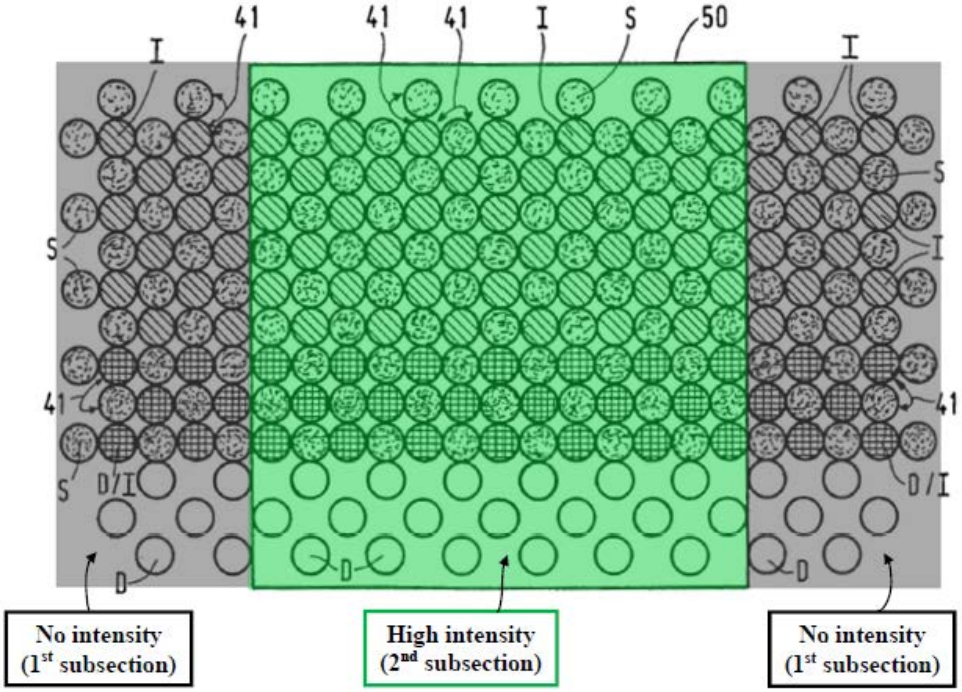

EX1010, FIG. 14 (annotated).

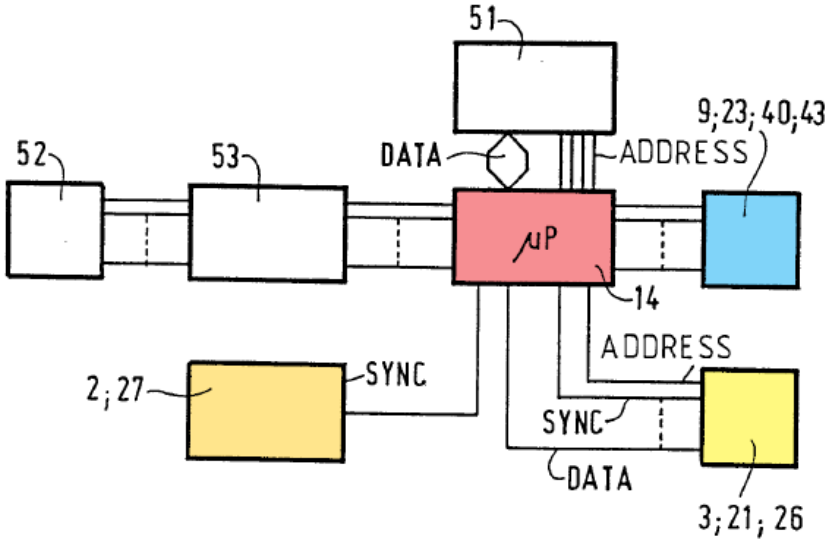

EX1010, FIG. 15 (annotated).

The ’503 patent does not disclose a predefined illuminance value, so a value is not required to satisfy [65.6]. Further, a POSA reading Karlsson would have understood Karlsson’s “dipped” illuminance, for example, teaches a “predefined” illuminance, because Karlsson uses the dipped illuminance as a reference point below and above which to output illumination, preventing glare to other vehicles while increasing illumination to other areas. EX1003, ¶532; EX1010, 9:19-26.

Thus, Karlsson’s system would illuminate the first subsection (shaded area) “below a predefined illuminance.” *Supra* Section XII.A; EX1003, ¶¶533-534.

3. [65.7]

Karlsson discloses illumination in non-shaded areas is “*optimally adapted* to the road and to the ambient light” and “permitting a light intensity which is generally *higher than that of conventional dipped headlights*.” EX1010, 9:6-26, Abstract, FIGS. 3, 14-15, 23:17-22, 19:26-33, 5:28-32, 2:7-9, 1:18-23, 9:6-8, 14:26-

30, 5:16-32; EX1003, ¶¶535-536. Thus, Karlsson's processor "determin[es] an illumination level" for the second subsection (non-shaded area). EX1003, ¶¶536-537.

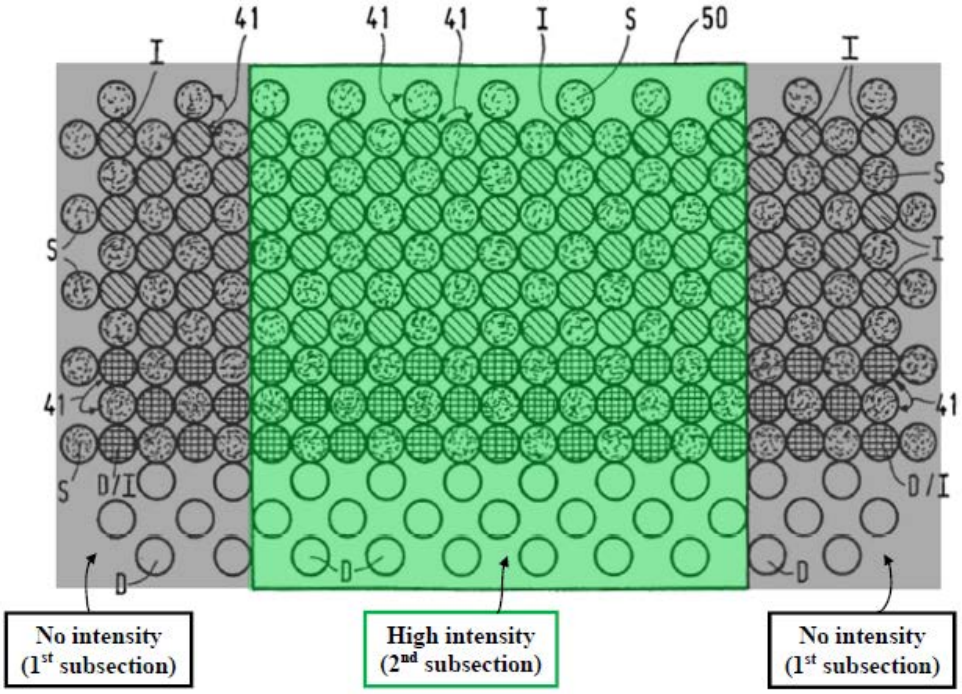

EX1010, FIG. 14 (annotated).

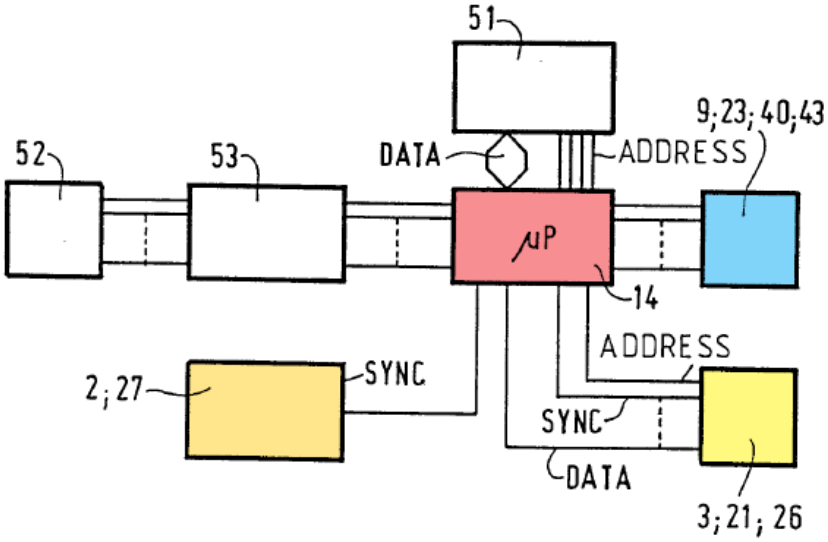

EX1010, FIG. 15 (annotated).

4. [65.8]

Karlsson discloses [65.8]. *Supra* Section XII; EX1003, ¶¶538-539; EX1010, 9:9-26, Abstract, 19:26-33, 2:7-9, 14:26-30, 5:16-32, FIGS. 3, 14-15. The second subsections (non-shaded areas, e.g., emitted light beam 50) are illuminated "above the first predefined illuminance" because the illuminance in those areas is "*higher* than that of conventional *dipped* headlights"—above a *dipped* illuminance. EX1003, ¶¶539-541; EX1010, Abstract, FIG. 14.

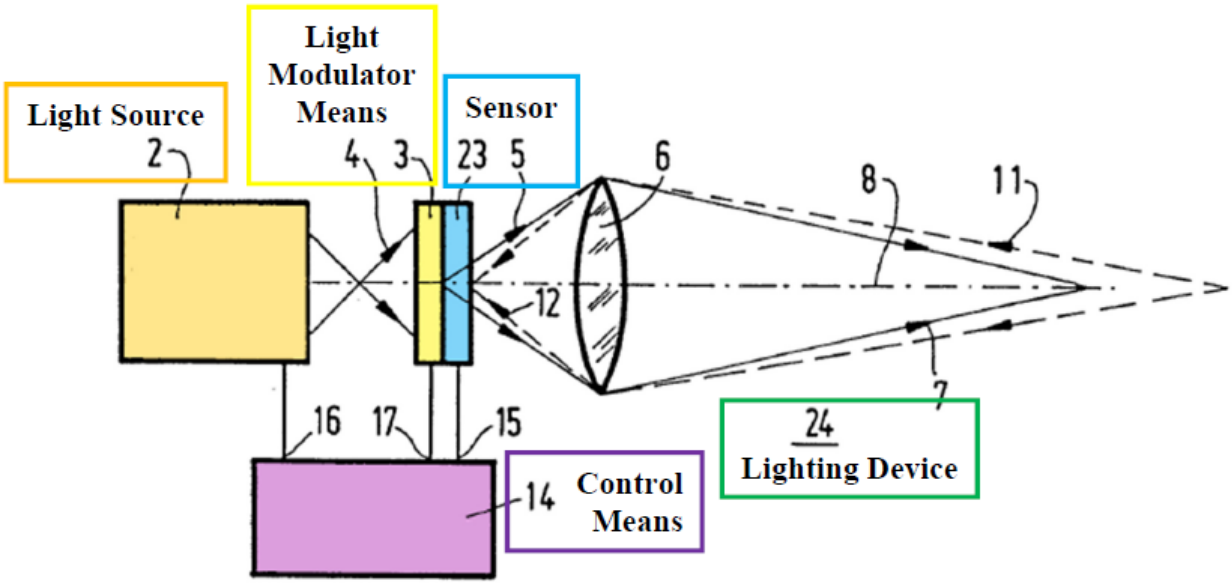

EX1010, FIG. 3 (annotated).

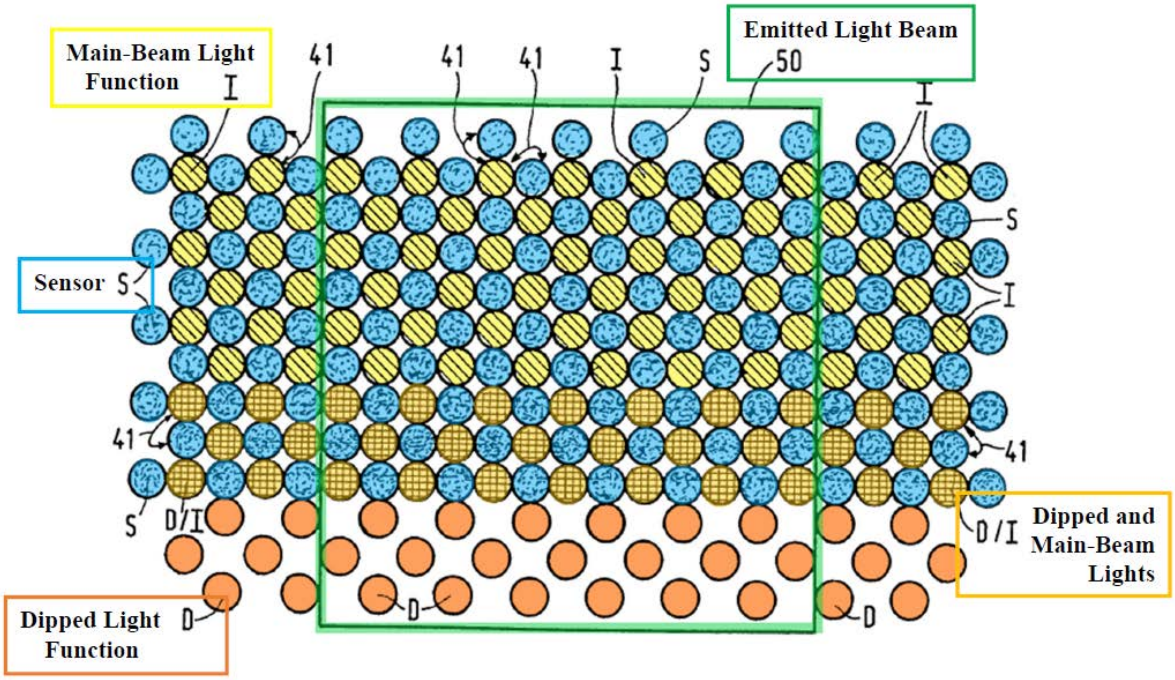

EX1010, FIG. 14 (annotated).

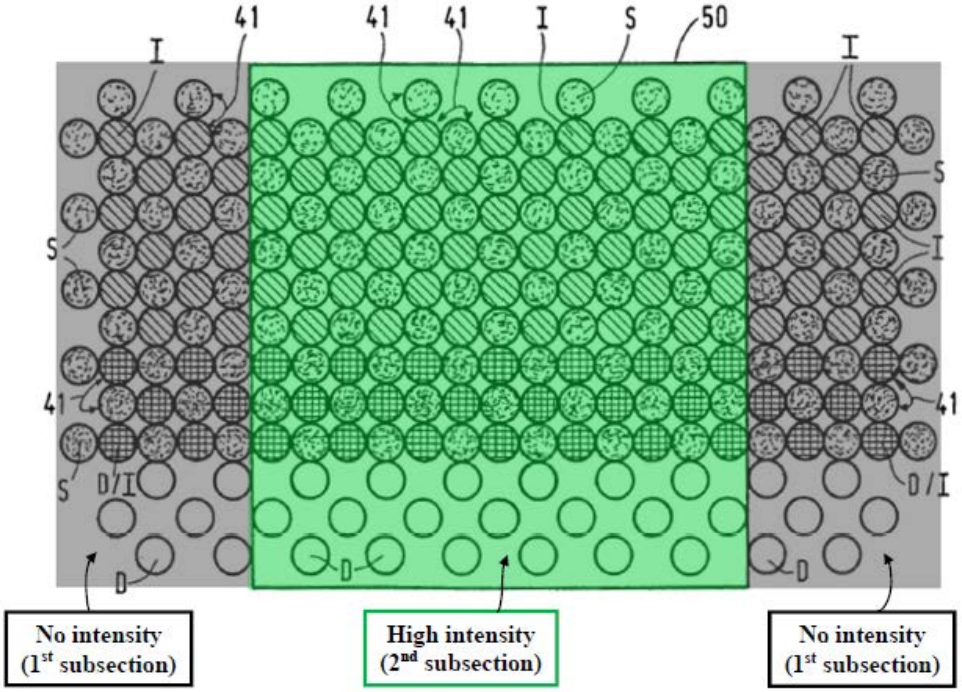

EX1010, FIG. 14 (annotated).

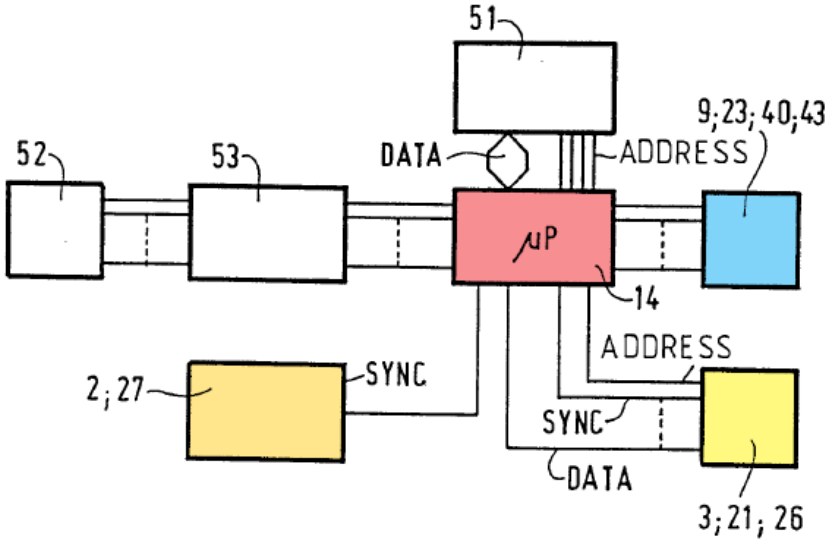

EX1010, FIG. 15 (annotated).

Thus, Karlsson's system would illuminate the second subsection (non-shaded area) "above the predefined illuminance." *Supra* Section XII.A; EX1003, ¶¶542-543.

5. [65.9]

Karlsson discloses [65.9]. *Supra* Section XII.A; EX1003, ¶544. Karlsson discloses "*lighting means 2, 3…controlled by control means 14*, such that the *incident light 11* on the *light-sensitive sensor 9*…is *processed* into an *electric control signal*…[and] *processed* by the control means 14 into *output signals at outputs 16, 17* thereof, so as to *control the lighting means 2, 3*." EX1010, 9:9-17, FIGS. 3, 14-15, 20:12-32, 21:36-22:4; EX1003, ¶544. Thus, Karlsson's processor determines control instructions to "control[] one or more directional light sources" to output desired illumination in the first subsection (shaded area) and the second subsection (non-shaded area). EX1010, 9:9-17, FIGS. 14-15; EX1003, ¶544.

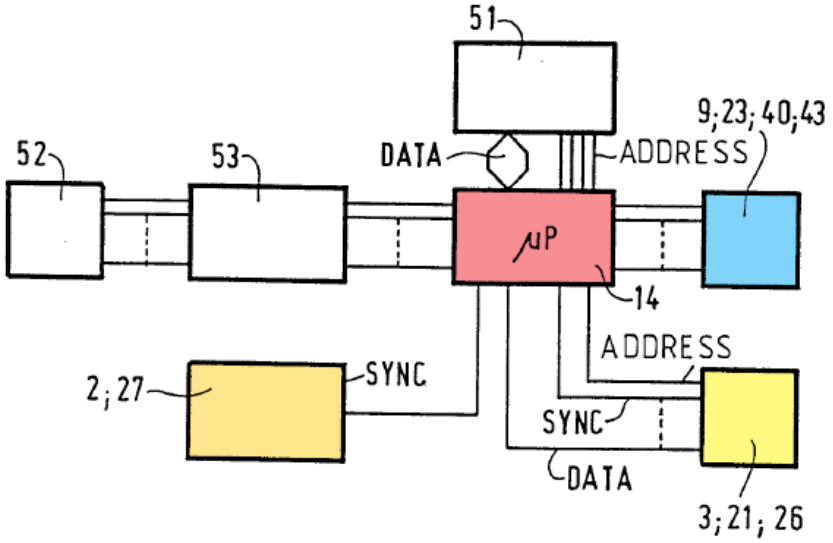

EX1010, FIG. 15 (control circuitry) (annotated).

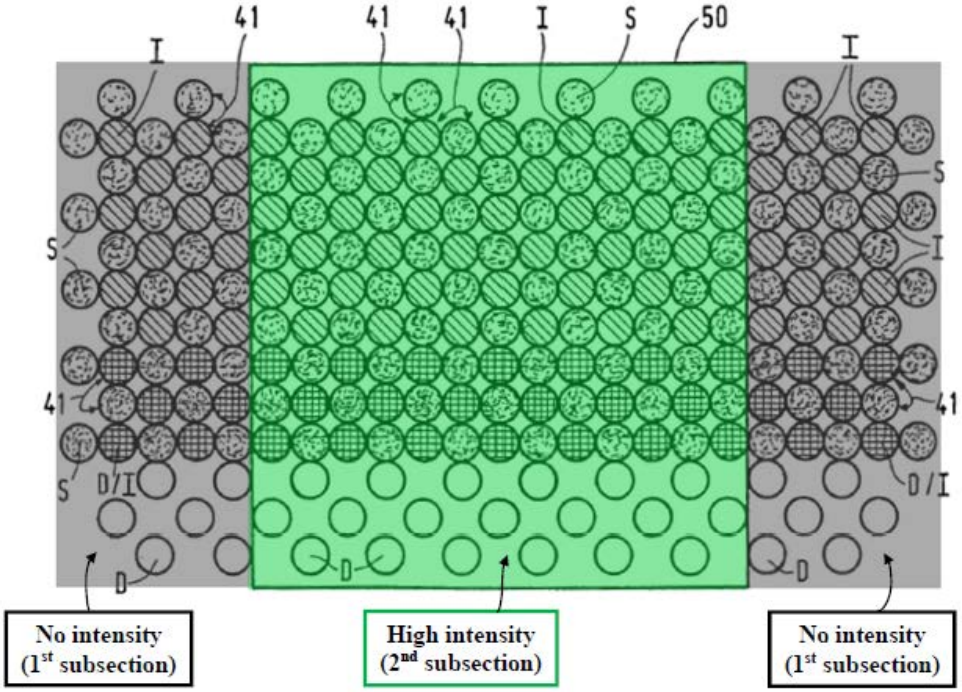

EX1010, FIG. 14 (annotated).

Also, Karlsson discloses "spotlight beams 34 can be…a *grid of separate light sources*, such as *LEDs*…controlled either *individually* or in *groups*…[and] may also be made up of…*light modulator means*" and "*light modulator means 3*

advantageously can be switched to…*given directions*." EX1010, 11:25-28, 14:1-9, FIGS. 3, 6, 14. Further, Karlsson/Karlsson-Harbers discloses "directional light [clusters/sources]." *Supra* Section XII.B.7; EX1003, ¶¶545-567.

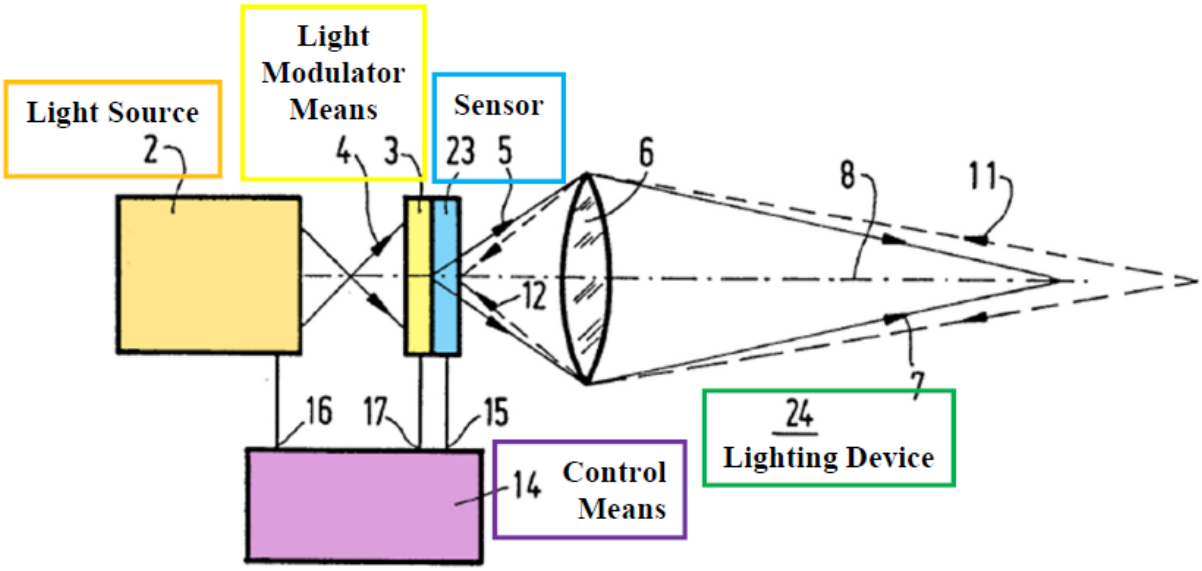

EX1010, FIG. 3 (annotated).

6. [65.10]

Karlsson discloses "*lighting means 2, 3…controlled by control means 14*, such that the *incident light 11* on the *light-sensitive sensor 9*…is *processed* into an *electric control signal*…[and] *processed* by the control means 14 into *output signals at outputs 16, 17* thereof, so as to *control the lighting means 2, 3*." EX1010, 9:9-17, FIGS. 3, 14-15; *id*., 20:12-32, 21:36-22:4; EX1003, ¶568. Thus, Karlsson's lighting means 2, 3 (via light modulator means 3) receives output (control) signals 16, 17 from control means to lighting means 2, 3 to "control[] the light sources to emit the headlight beam." EX1010, 9:11-17, FIGS. 14-15; EX1003, ¶¶568-569.

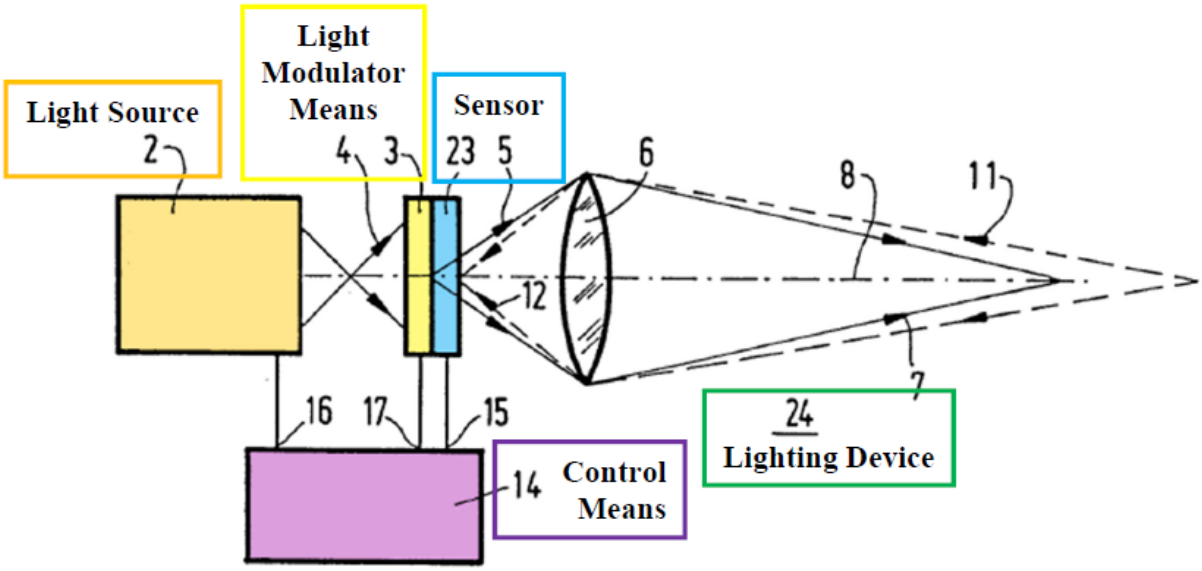

EX1010, FIG. 3 (annotated).

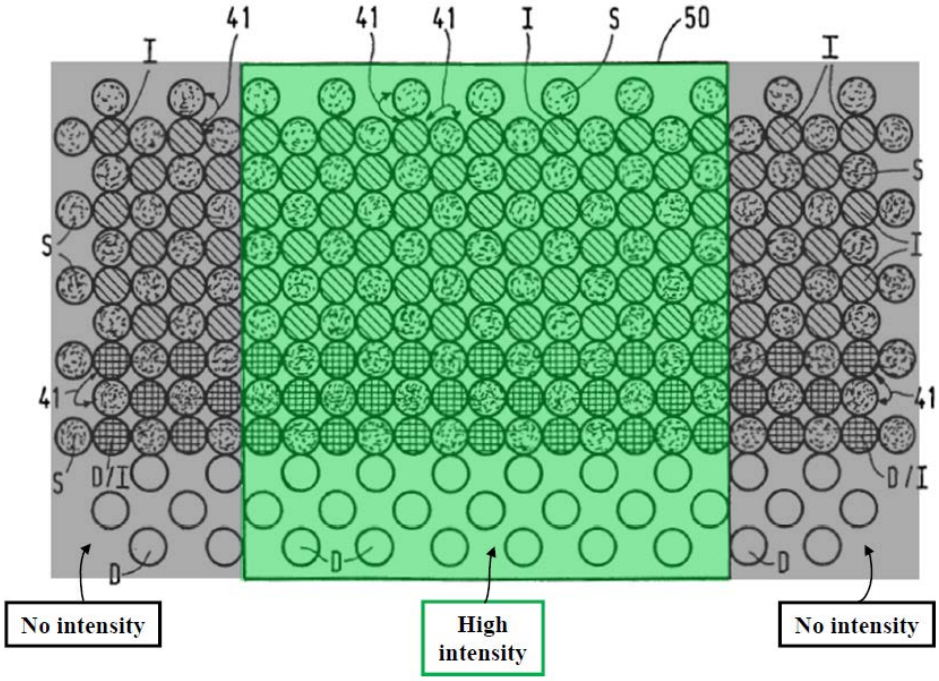

EX1010, FIG. 14 (annotated).

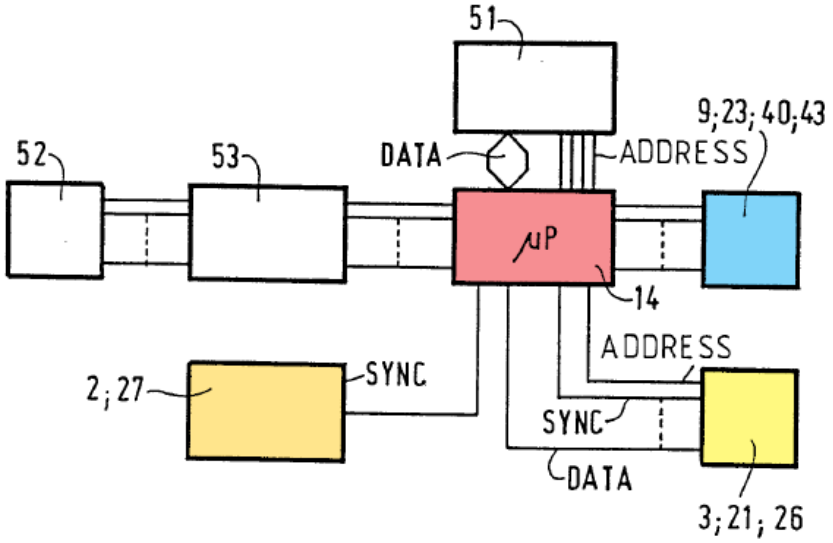

EX1010, FIG. 15 (control circuitry) (annotated).

D. Claim 27

Karlsson discloses "determining illumination requirements." *Supra* Section XII.B.4; EX1003, ¶570. Karlsson also discloses "intensity…*higher than that of conventional dipped headlights*" and "*main-beam light function*." EX1010, Abstract, 19:24-28, 1:27-30, 15:7-10, 20:6-15, FIGS. 7, 14-15; EX1003, ¶571. Thus, Karlsson discloses multiple "headlight modes," for example, a "high beam" mode and a "low beam" mode. EX1003, ¶¶571-572.

E. Claims 28/68[7]

Karlsson discloses "spotlight beams 34 can be…a *grid of separate light sources, such as LEDs…controlled* either *individually* or in *groups*" and recognizes the problem of illuminating "when driving on *dark, unilluminated* roads" with just

[7] Claims 28 and 68 are patentably indistinct. EX1003, ¶573.

low beam illumination. EX1010, 1:16-24, FIGS. 3, 6, 14, 11:25-28, 4:32-35, 4:26-5:15, 14:1-15; EX1003, ¶574.

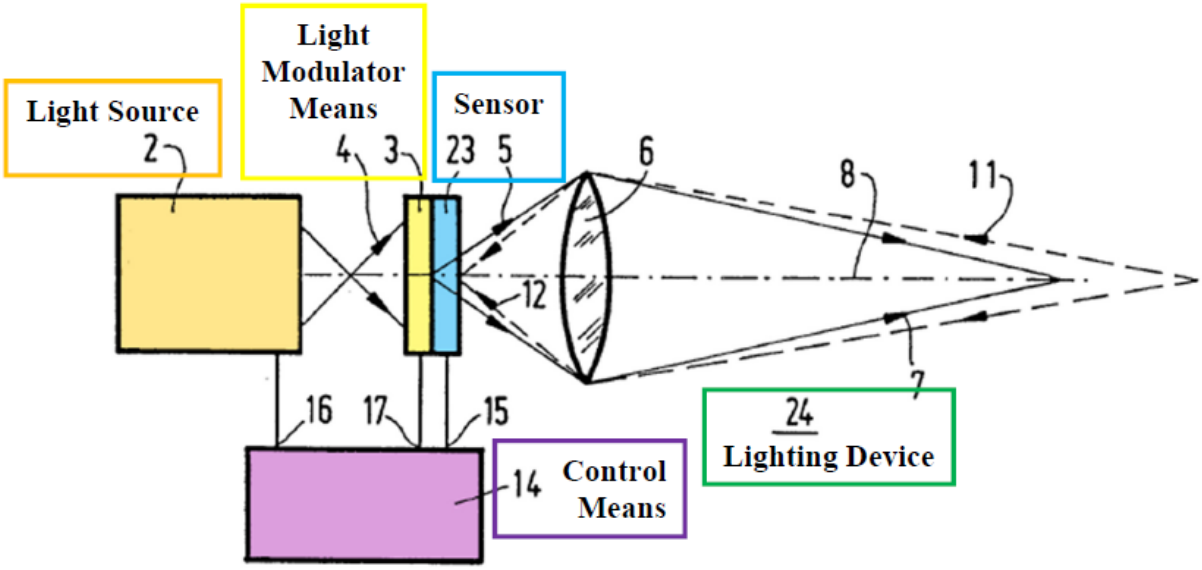

EX1010, FIG. 3 (annotated).

Harbers discloses "*on-axis* part…is adapted to…*green-yellow light*…*off-axis* parts…is adapted to…*blue-green light*." EX1011, 6:3-7, FIGS. 1B-2; *id*., 9:1-10:5, 9:28-10:5, 5:21-26; EX1003, ¶¶575-576. Thus, Harbers's independently controllable, colored directional light beam segments 6-6'-6"-6'", 7-7'-7"-7'" provide "peripheral night vision" with "blueish…illumination along a side of a road…[and] yellow tinted illumination along the road" (claim 28), and "yellowish illumination…illuminating a road…and a blueish illumination…illuminating areas off-road" (claim 68). EX1003, ¶576.

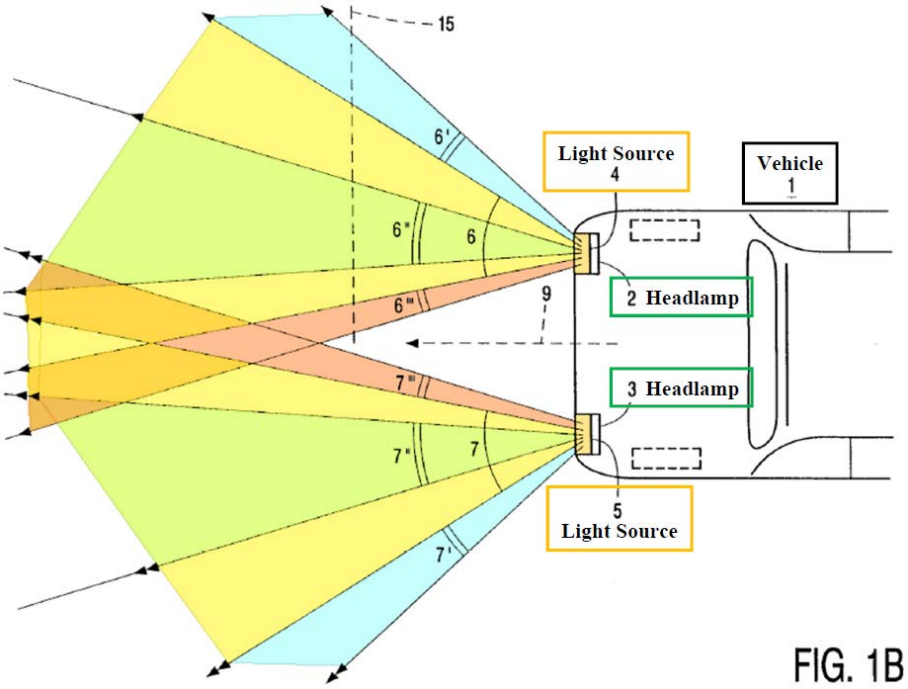

EX1011, FIG. 1B (annotated).

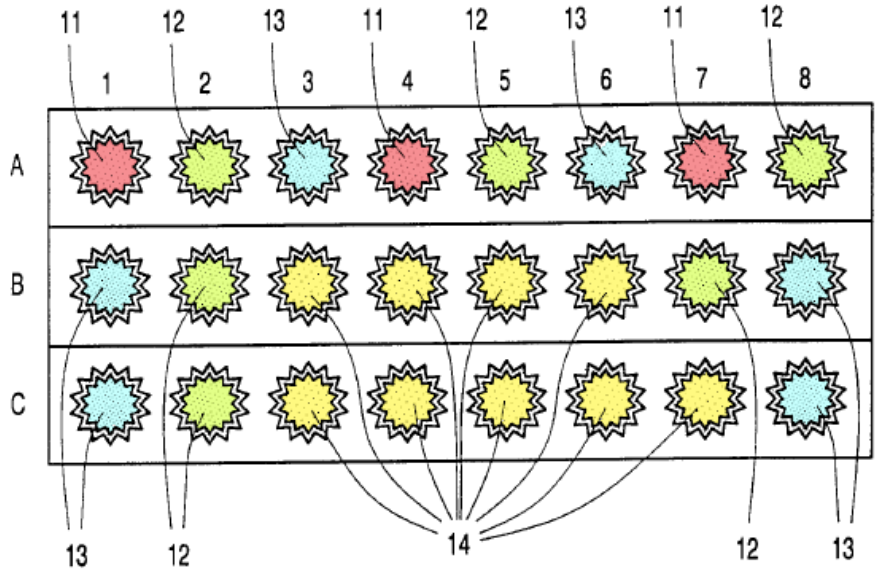

EX1011, FIG. 2 (annotated).

Supra Section XII.A; EX1003, ¶¶445-459, 577.

Thus, Karlsson-Harbers renders obvious claims 28 and 68. EX1003, ¶¶578-587.

F. Claims 29/69[8]

Karlsson discloses "spotlight beams 34 can be…a *grid of separate light sources, such as LEDs*" and recognizes the problem of "*scattered* reflected light." EX1010, 9:34-37, FIGS. 3, 6, 14, 11:25-28, 1:16-24, 4:26-5:15, 14:1-15; EX1003, ¶589.

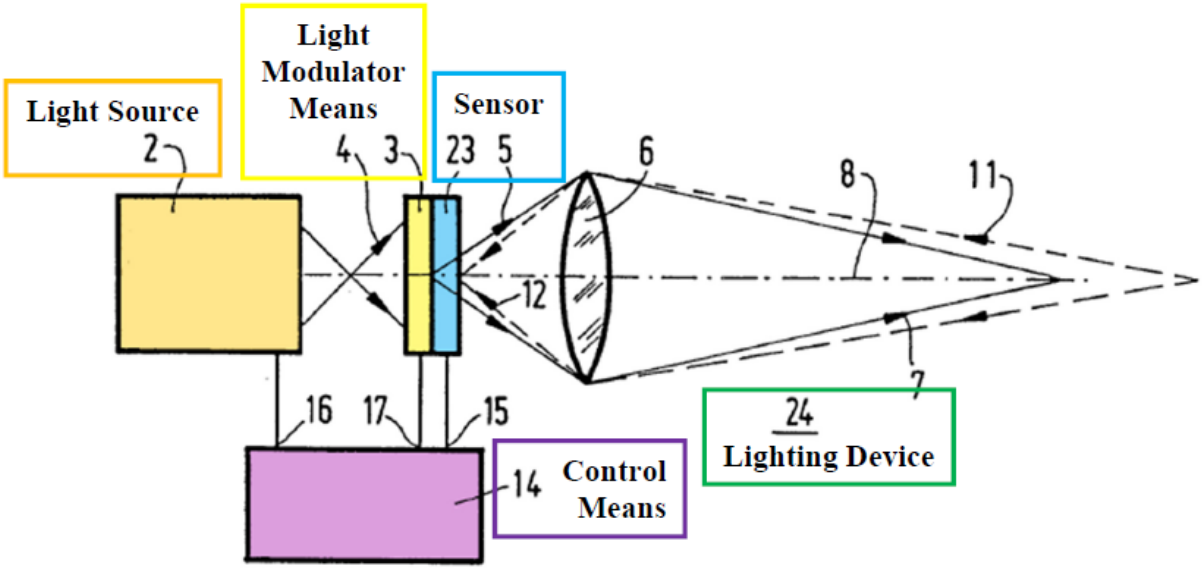

EX1010, FIG. 3 (annotated).

Harbers discloses "[u]nder unfavorable weather conditions, in particular *fog and snow*…a *relatively wide beam 16* is obtained which is substantially composed of *yellow light*." EX1011, 10:6-14, FIGS. 1B, 2, 4A, 9:23-25 ("*yellow light* in order to *improve the long-distance visibility*"), 4:17-21; EX1003, ¶¶590-591.

[8] Claims 29 and 69 are patentably indistinct. EX1003, ¶588.

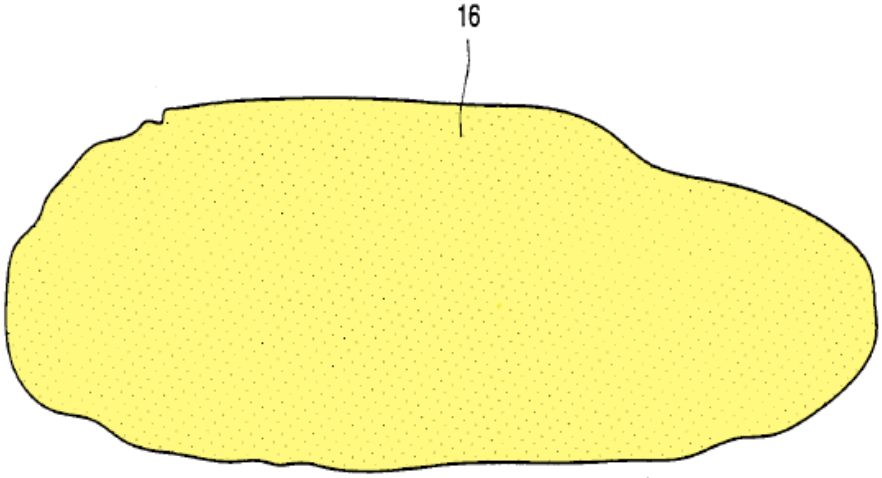

EX1011, FIG. 4A (annotated).

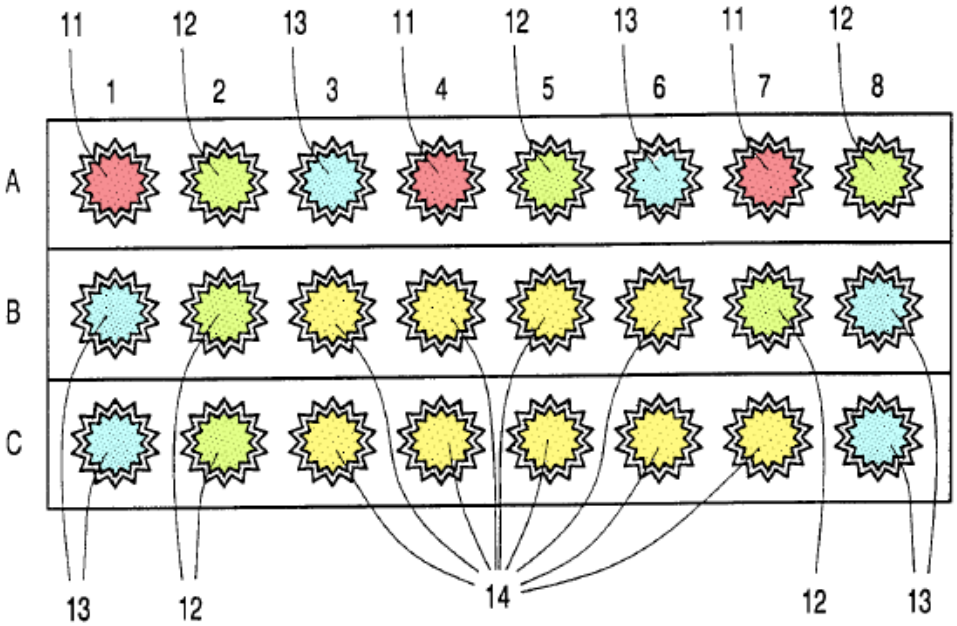

EX1011, FIG. 2 (annotated).

Supra Section XII.A; EX1003, ¶¶445-459, 592.

Thus, Karlsson-Harbers renders obvious claims 29 and 69. EX1003, ¶¶593-602.

G. Claim 30

Karlsson discloses "lighting device is…*dynamically adjusted* in dependence on the intensity and the direction of the light being detected." EX1010, 2:4-6, FIGS. 3, 14-15, 2:32-35, 20:26-27; EX1003, ¶¶603-604.

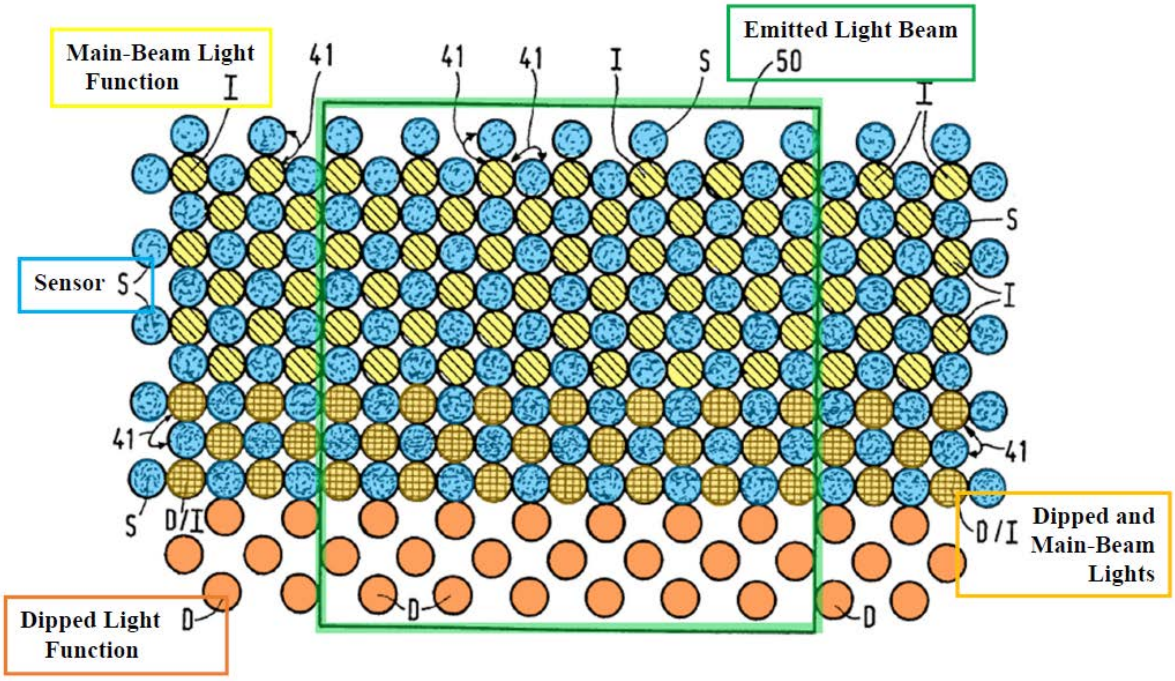

EX1010, FIG. 14 (annotated).

H. Claim 31

Karlsson discloses "manually operated *switching means 52*" and "*manually adjusting said pattern*…*switched* in such a manner that *manual adjustment* takes precedence over *automatic adjustment*." EX1010, 20:12-15, 6:35-7:3, FIG. 15, 20:6-15; EX1003, ¶605. A POSA would have understood that Karlsson discloses "an override switch" because "manually operated *switching means 52*" includes a manual or digital switch to "adjust[] automatic operation." EX1003, ¶¶605-607.

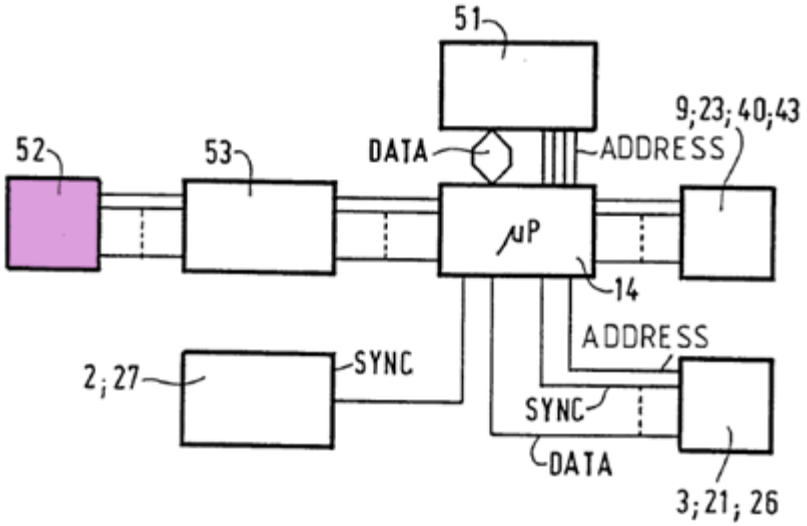

EX1010, FIG. 15 (annotated).

XIII. GROUND 9: THE COMBINATION OF KARLSSON, HARBERS, AND GOTOU RENDERS OBVIOUS CLAIMS 32-36 AND 70.

A. A POSA would have been motivated to combine Gotou with Karlsson-Harbers with a reasonable expectation of success.

A POSA would have been further motivated to modify Karlsson-Harbers to adjust light based on map data including road curvature, as in Gotou, to further control Karlsson-Harbers's directional spotlight beams to illuminate roadway curves. EX1003, ¶¶608-611; EX1010, 1:16-26, 4:17-21, 9:18-26.

First, including an additional data source for Karlsson-Harbers's controller—Gotou's *known technique* of using map data including road curvature—would have enhanced Karlsson-Harbers by increasing/adjusting illumination based on an upcoming curve/turn, improving driver safety by providing light to where it is needed. *Second*, a POSA would have easily incorporated *known components* of Gotou's navigation system 30 (including GPS receiver 34, *see* EX1012, Abstract,

1:35-40, 2:8-26, 3:24-55, 4:45-49, 6:4-61, 7:32-43, 8:28-35, FIGS. 1-3, 8-10) into Karlsson-Harbers. EX1003, ¶612. This would have, like Gotou, provided road curvature data for Karlsson-Harbers's detected field of view, allowing Karlsson-Harbers's system to increase increase/adjust illumination toward the upcoming curve/turn. *Id*.

Karlsson recognizes "[w]hen *taking a bend*…the road ahead…is *insufficiently lit*" and discloses using additional sensors, for example, "*direction sensor 54*…for determining when the car 56 is *taking a bend*, so that the light beam 7 can be *adapted*," and acknowledges the safety benefits of those systems. EX1010, 1:35-2:1, 20:22-32, FIG. 16, 6:26-33, 9:23-25; EX1003, ¶¶613-614.

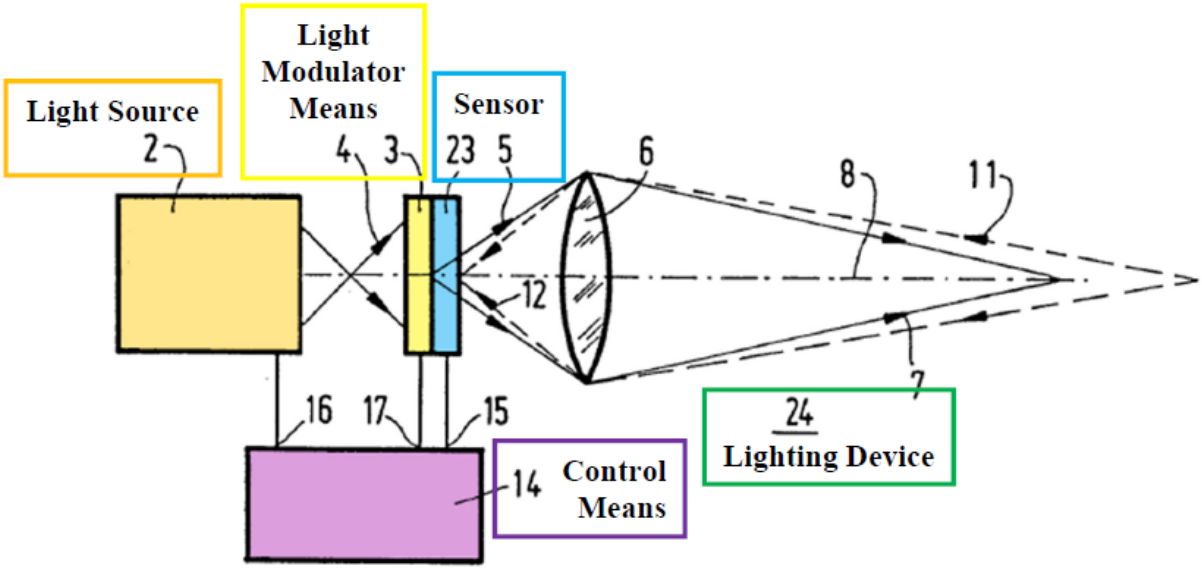

EX1010, FIG. 3 (annotated).

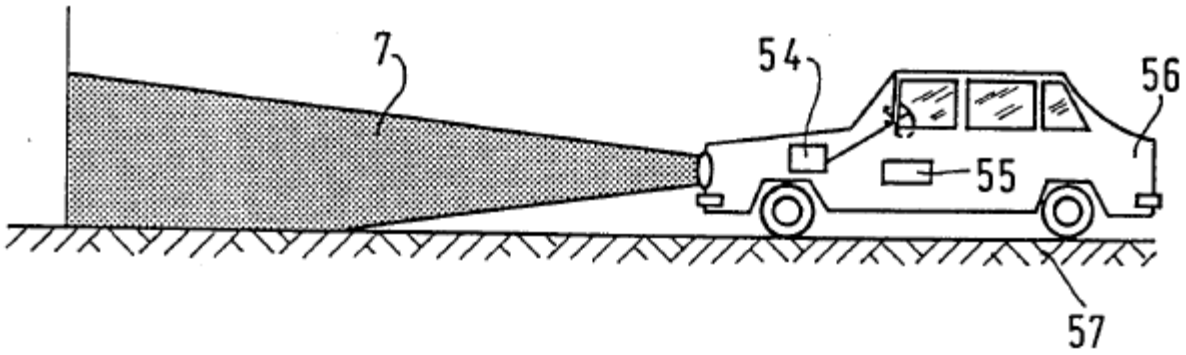

EX1010, FIG. 16.

Gotou discloses further details on how to detect upcoming curves/turns. EX1003, ¶615. Such modification would have further achieved Karlsson-Harbers's purpose of improving driver visibility and safety. *Id.*; EX1010, 1:35-2:1, 9:18-26, 20:22-32; EX1011, 5:14-26, 6:1-7, 6:27-7:19, 8:10-18. Gotou's active *techniques and system components*, like Karlsson-Harbers, seek to enhance driver safety—using map data-based control including road curvature. EX1012, 1:17-20, 2:19-26, 6:40-43; EX1003, ¶616. Gotou's navigation system 30 data is input to ECU 10, which alters the light direction from headlamp 2 in response to map data including road curvature input, directing light where it is needed at a given time, enhancing safety. EX1012, 4:30-49, 6:4-61, 8:28-35, FIGS. 1-3, 2:19-26; EX1003, ¶¶113, 616. Gotou's system responds to real-world conditions, multiple curves, and intersections. EX1012, 1:52-59, 2:19-26, 6:40-43, 8:28-35; EX1003, ¶616.

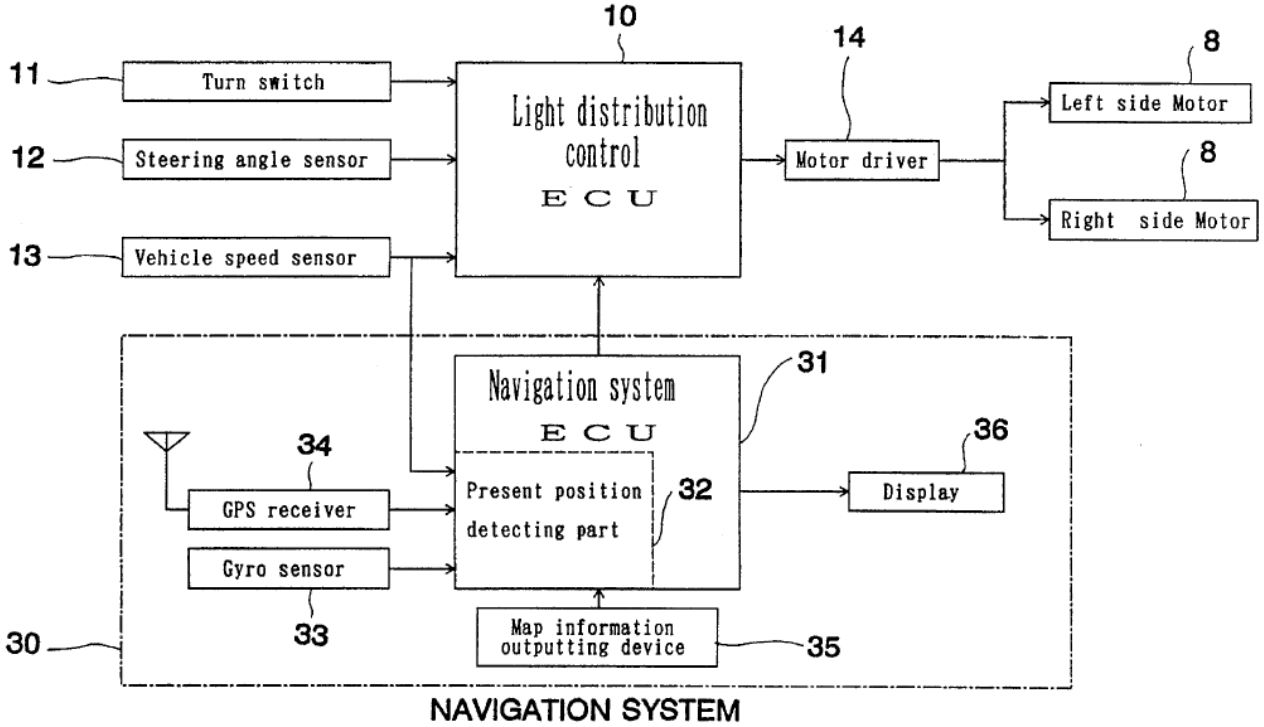

EX1012, FIG. 3.

Gotou's Figures 8-9 show that illumination control can be planned and controlled on roads with curves. EX1003, ¶¶113, 617. When there is a leftward curve, the light distribution is adjusted leftward prior to reaching the curve. EX1012, 3:24-55, 7:32-43, 8:28-35, FIGS. 8-9; EX1003, ¶617.

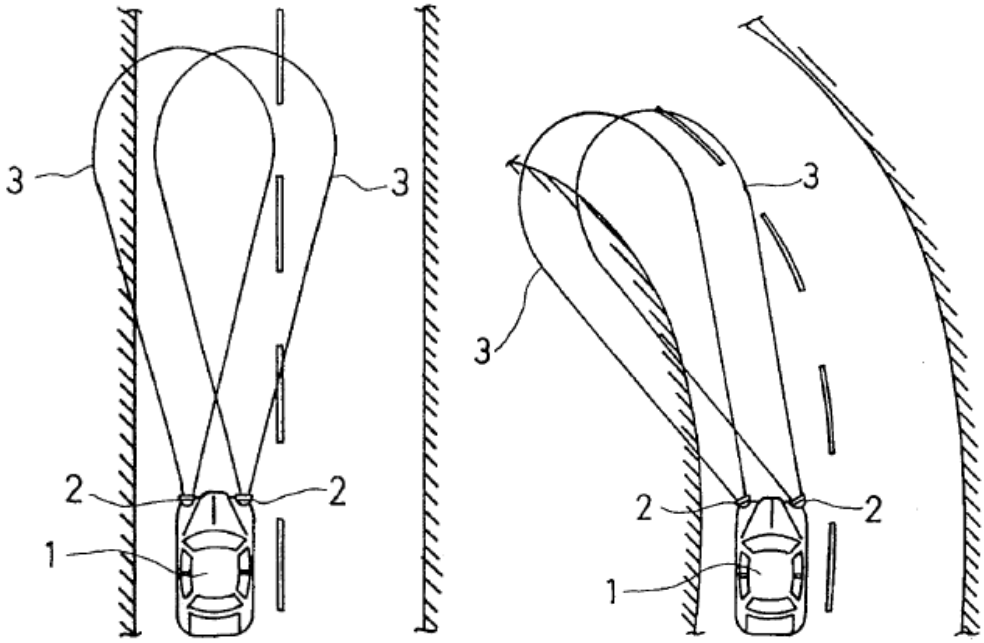

EX1012, FIGS. 8-9.

Including an additional data source for Karlsson-Harbers's controller/processor—Gotou's map data including road curvature—would have enhanced Karlsson-Harbers by increasing/adjusting illumination of upcoming curves/turns, thereby improving driver safety. EX1003, ¶618. This would have merely been applying Gotou's known technique (using map data including road curvature from GPS to direct/redirect light) to Karlsson-Harbers's similar, known device (dynamic headlamp system with controllable spotlight beams), in the same way. EX1003, ¶618; *KSR*, 550 U.S. at 417. Gotou's known technique is fully described along with its benefits (improved visibility and safety); thus, a POSA would have readily applied it to similar systems, such as Karlsson-Harbers's, in the same way. EX1003, ¶618; *KSR*, 550 U.S. at 419-421.

Additionally, or alternatively, this modification would have been simply combining known prior-art elements (Karlsson-Harbers's adaptive, direction-controllable headlamps with Gotou's directional control based on map data including road curvature) according to known methods (disclosed in Karlsson-Harbers and Gotou) to yield predictable results (illuminating curves/turns, improving safety). EX1003, ¶619; *KSR*, 550 U.S. at 415-416.

A POSA would have had a reasonable expectation of success combining Gotou with Karlsson-Harbers, for example, by simply modifying software instructions stored in memory of Karlsson-Harbers's controller/processor (ECU) to adjust and direct light of the spotlight beams appropriately in view of Gotou's map data including road curvature. EX1003, ¶620. It also would have been a straightforward combination of prior-art elements: Gotou's navigation system 30 (including GPS receiver 34) with Karlsson-Harbers (in communication with Karlsson's controller). *Id.*

This would have been routine and well within a POSA's skill due to the similarities in Karlsson-Harbers's and Gotou's adaptive light control systems and methods—their common components were well-known and there would have been no limitations for a POSA to make such modifications. *Id.*, ¶¶621-622.

B. Claims 32/33/34/35/36/70

See supra Section VII.B; EX1003, ¶¶623-628. Karlsson's "light-sensitive sensor, …detects…the area *ahead of a vehicle*" and "*direction sensor 54*…determin[es] when the car 56 is *taking a bend*, so that the light beam 7 can be *adapted*." EX1010, 1:35-2:4, 20:29-32, FIGS. 3, 14-16, 6:26-33, 9:11-17; EX1003, ¶629. Karlsson/Karlsson-Harbers discloses "directional light [clusters/sources]." *Supra* Sections XII.A/XII.B.7; EX1003, ¶629.

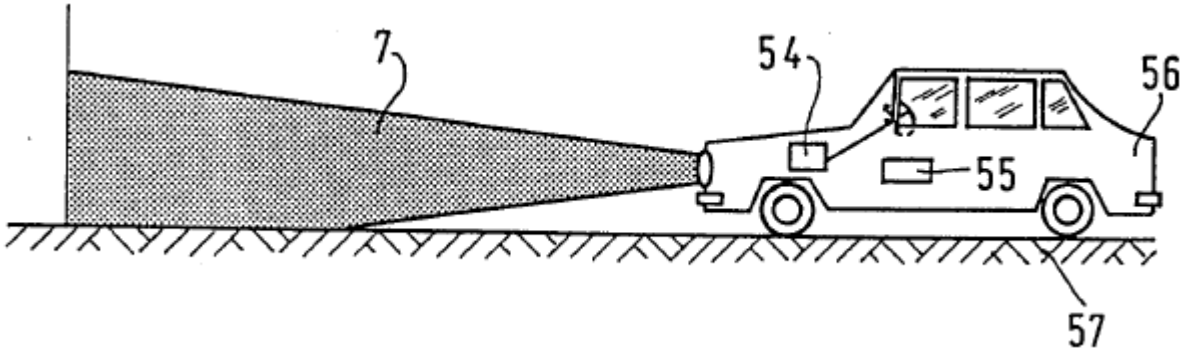

EX1010, FIG. 16.

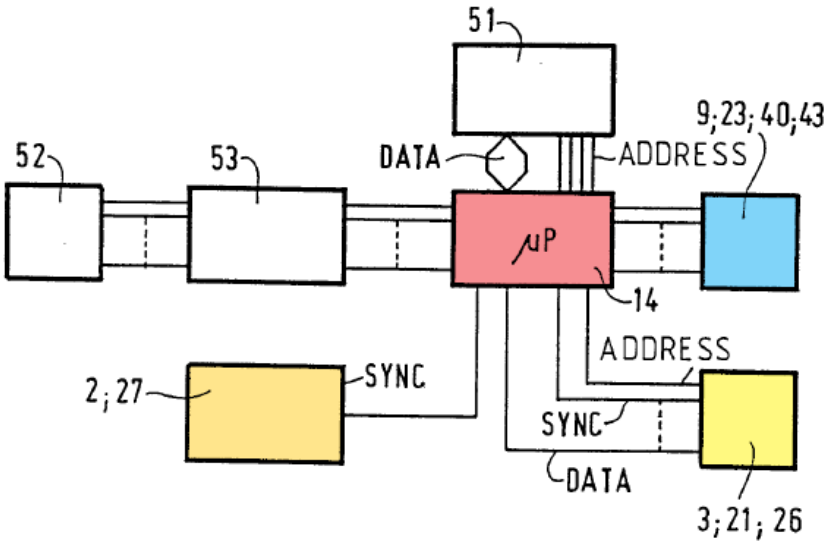

EX1010, FIG. 15 (annotated).

If Patent Owner argues that Karlsson-Harbers does not disclose these features, Gotou does. EX1003, ¶630.

Gotou's "ECU 10 gets *map information*…from the navigation system 30…to *determine a requisite optical axis angle θ*" and "estimation of the *forward road shape*…[based] on the *road data* of the map information, so that the lighting region is changed early *in the turning direction* and the *visibility is improved*." EX1012, 3:52-63, 8:28-35, FIGS. 3, 8-10, 6:28-44, 4:30-49; EX1003, ¶631.

A POSA would have understood that Gotou discloses illumination for "an upcoming curve" because illumination is controlled along the "forward road shape" recited in claims 32 and 70. EX1003, ¶632. Further, a POSA would have understood that Gotou discloses illumination for "an upcoming turn" because illumination is controlled along the "planned running direction" that includes an intended direction of a driver recited in claims 33-36. *Id*., ¶632; EX1001, 54:1-15.

SPERO EX. 2005

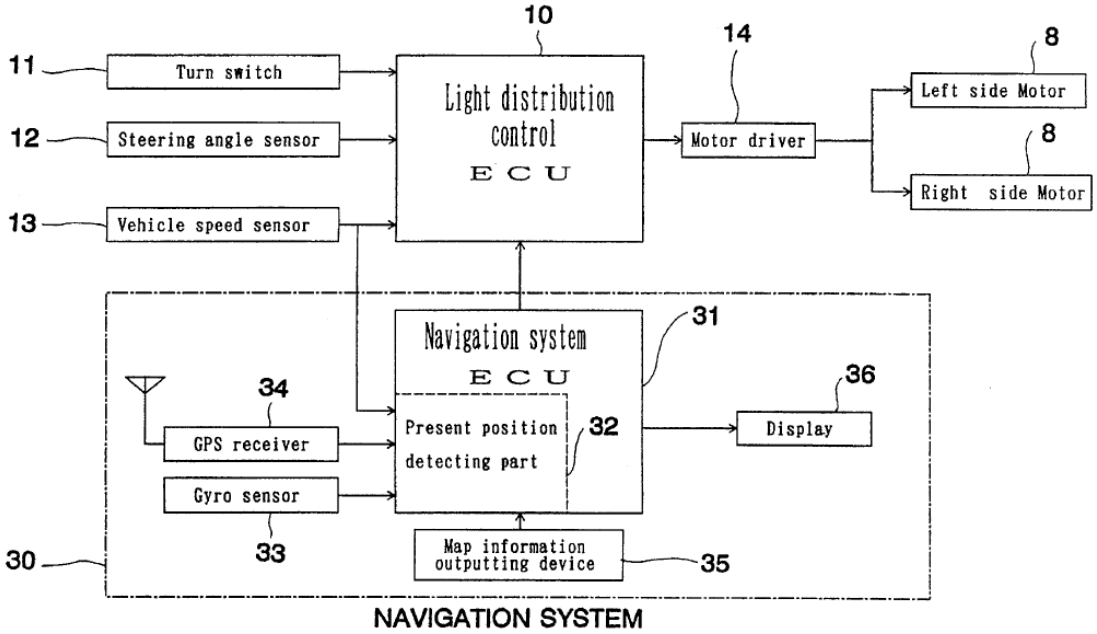

EX1012, FIG. 3.

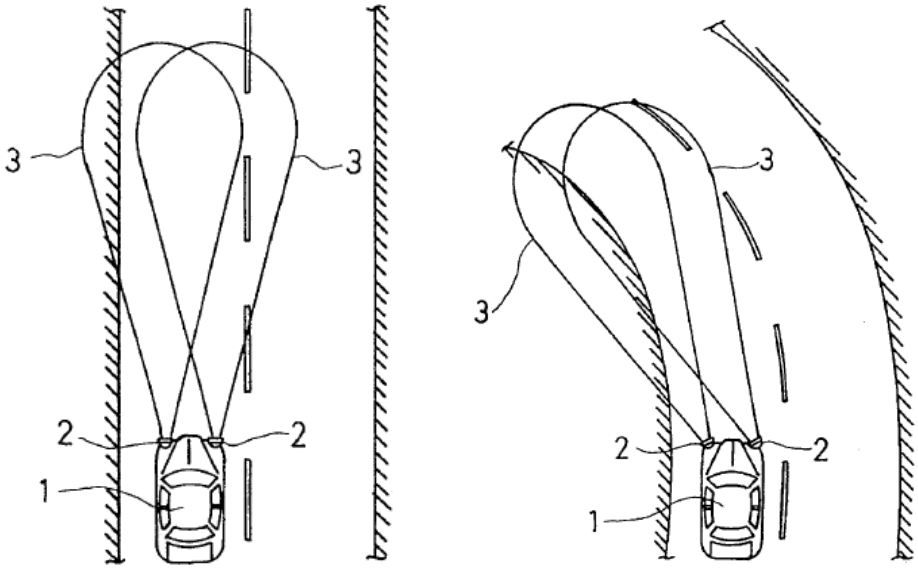

EX1012, FIGS. 8-9.

Supra Section XIII.A; EX1003, ¶¶608-621, 633.

Thus, Karlsson (with Harbers) with Gotou, discloses or renders obvious claims 32-36 and 70. EX1003, ¶¶634-649.

XIV. GROUND 10: THE COMBINATION OF KARLSSON, HARBERS, AND BRAUN RENDERS OBVIOUS CLAIMS 66-67.

A. A POSA would have been motivated to combine Braun with Karlsson-Harbers with a reasonable expectation of success.

A POSA would have been further motivated to modify Karlsson-Harbers to adjust light based on pattern recognition (e.g., identifying pedestrians, road signs, obstacles, etc.), as in Braun (EX1009, 5:27-31, 14:21-30, 22:19-23, 23:28-24:27, 26:29-27:2, FIGS. 1, 5-6), to further control Karlsson's directional spotlight beams to illuminate objects, thereby improving visibility and driver safety—an express purpose of Karlsson. EX1003, ¶¶650-651; EX1010, 1:16-26, 4:17-21, 9:18-26.

Including an additional control technique (software implementation) for Karlsson-Harbers's controller—Braun's *known technique* of pattern recognition—would have enhanced Karlsson-Harbers by identifying and illuminating objects of interest in a scene, increasing visibility and safety. EX1009, 5:27-31, 14:21-30, 22:19-23, 23:28-24:27, 26:29-27:2, FIGS. 1, 5-6; EX1003, ¶652. Karlsson's system "*selectively adjust[s]*…spotlight beam[s] 34, in response to a *control signal from sensor means 23*…to provide a *desired lighting pattern*" in "given *directions*." EX1010, 14:26-30, 11:25-28, FIGS. 3, 6, 14. EX1003, ¶652.

SPERO EX. 2005

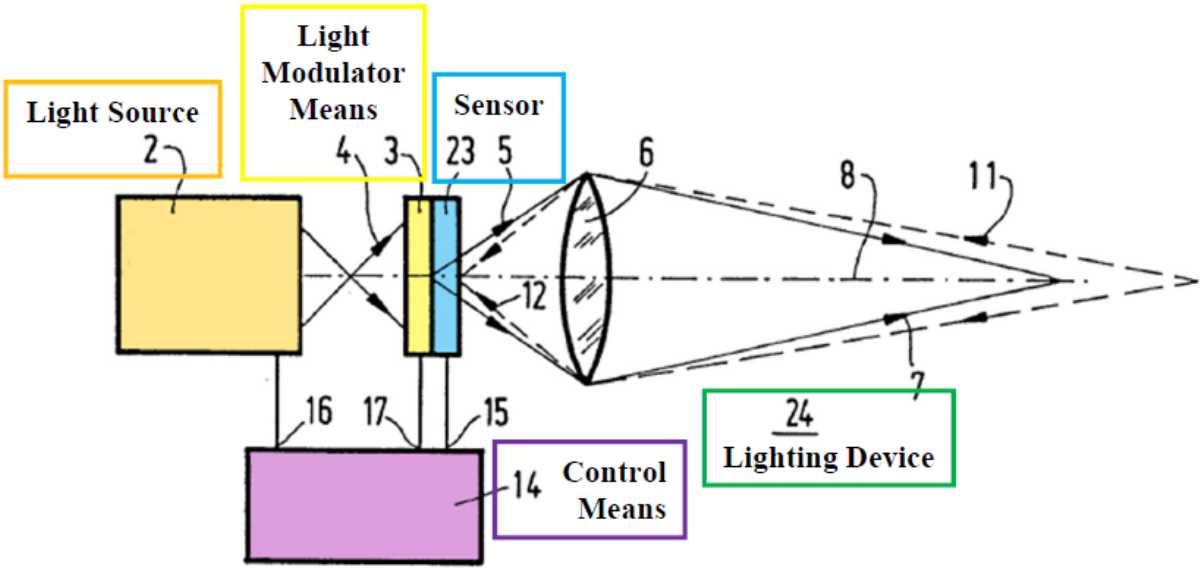

EX1010, FIG. 3 (annotated).

Indeed, Karlsson's techniques and system of controlling individual spotlight beams emphasize safety of all drivers. EX1010, 1:16-26, 4:17-21, 9:18-26. Controllable headlamps "significantly increase the driving comfort and the road safety," and that "glaring or blinding of oncoming traffic is effectively prevented," increasing safety. *Id.* Karlsson enables "higher light intensity," for example "when driving on dark, unilluminated roads," while protecting other drivers from glare. *Id.*; EX1003, ¶653.

Karlsson recognizes "light-sensitive sensors 9 and 23…precisely determin[e]…the *detected light 11*" and discloses identifying "oncoming traffic" and other objects (e.g., "road signs etc.") in the field of view. EX1010, 12:19-35, 3:19-31, FIGS. 3, 14-15, 1:21-26, 2:2-4, 5:16-32, 9:3-33, 10:32-11:1, 11:7-28; EX1011, 2:27-3:10; EX1003, ¶654. And Braun's *technique* (software

implementation), like Karlsson-Harbers, enhances driver visibility and safety—using pattern recognition. EX1009, 5:21-6:7, 11:14-17, 11:27-30, 12:17-20, 38:19-22; EX1003, ¶654. Braun's pattern recognition application identifies objects of interest (e.g., pedestrian, road-sign) and controller 118 adaptively controls luxels in illuminator 116 to illuminate the identified objects, improving visibility of the objects and capturing the driver's attention and altering the driver to the danger of the objects, thereby enhancing safety. EX1009, 14:21-30, 23:28-24:27, 6:8-15, 10:28-30, 22:19-23, 5:27-31, 26:20-29, 26:29-27:2, 26:31-27:1, FIGS. 1, 5-6; EX1003, ¶¶114, 654. Like Karlsson, Braun's pattern recognition application "identifies *oncoming vehicles* and automatically adjusts illumination…to *prevent glare*…[and] *blinding* a driver of the oncoming vehicle." So, Braun's pattern recognition technique (software implementation) would have been a natural extension and improvement on Karlsson's system. EX1009, 6:4-7, 12:17-20, 38:19-22; EX1003, ¶654.

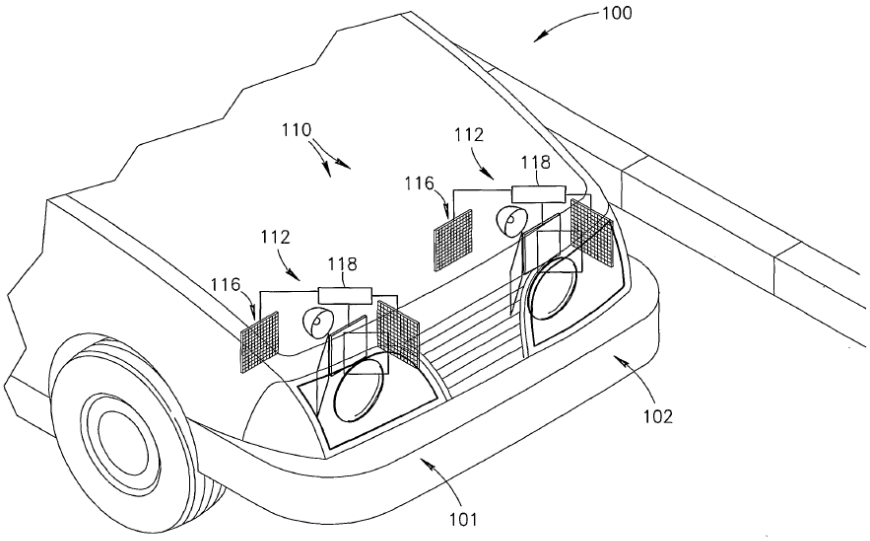

FIG.5

EX1009, FIG. 5.

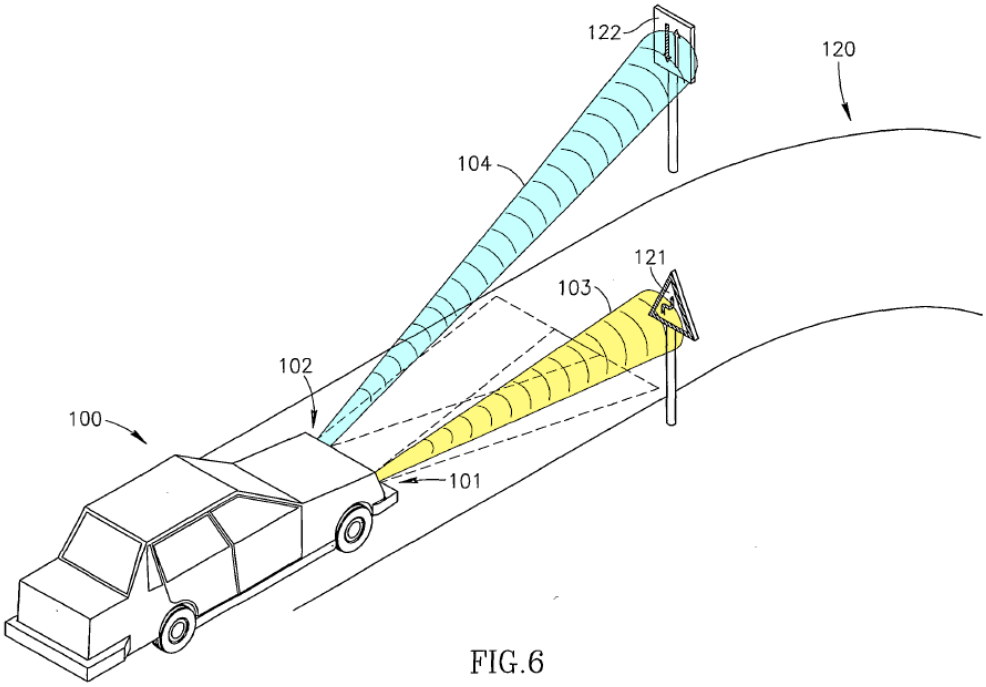

FIG.6

EX1009, FIG. 6 (annotated).

The additional control of having pattern recognition as in Braun, implemented with Karlsson-Harbers's controller/processor, would have enhanced Karlsson-Harbers's system by identifying and illuminating objects of interest, capturing the

driver's attention and/or alerting the driver to the danger of the objects, thereby improving safety. EX1003, ¶655. This would have merely been applying Braun's known technique (software implementation: pattern recognition to identify/illuminate objects of interest) to Karlsson-Harbers's similar, known device (dynamic headlamp system with controllable beams), in the same way. *Id.*; *KSR*, 550 U.S. at 417. Braun's known technique is fully described along with its benefits (improved visibility, thereby increased safety); thus, a POSA would have readily applied it to similar systems, such as Karlsson-Harbers's, in the same way. EX1010, 21:36-22:4, 9:11-17, 12:19-24, 20:12-15; EX1003, ¶655; *KSR*, 550 U.S. at 419-421.

A POSA would have had a reasonable expectation of success combining Braun with Karlsson-Harbers, for example, by simply modifying software instructions stored in memory of Karlsson-Harbers's controller/processor (e.g., an algorithm) to adjust/direct light of the spotlight beams appropriately in view of Braun's pattern recognition. EX1003, ¶656. This would have been routine and well within a POSA's skill due to the similarities in Karlsson-Harbers's and Braun's adaptive systems—their common components were well-known and there would have been no limitations for a POSA to make such modifications. *Id.*, ¶¶656-657; EX1009, 22:17-25.

B. Claims 66/67

See supra Section IX.B; EX1003, ¶¶658-659.

Karlsson discloses identifying "oncoming traffic" and other objects (e.g., "*road signs etc.*"). EX1010, 2:2-4, 3:19-31, 12:19-35, FIGS. 3, 14-15, 9:3-33, 5:16-32, 10:32-11:1, 11:7-28; EX1011-2:27-3:10; EX1003, ¶660.

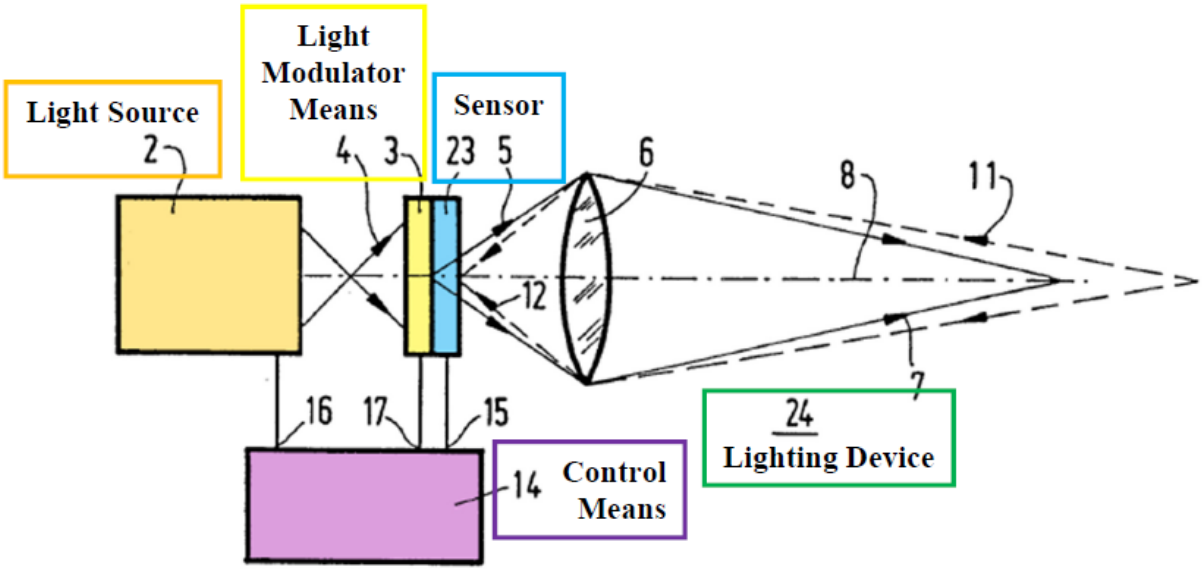

EX1010, FIG. 3 (annotated).

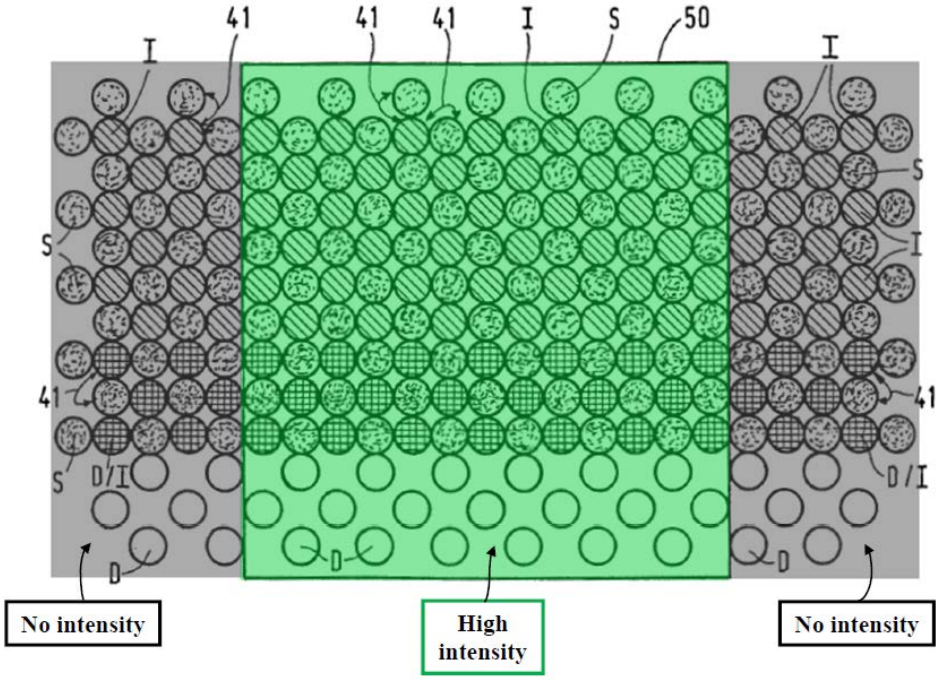

EX1010, FIG. 14 (annotated).

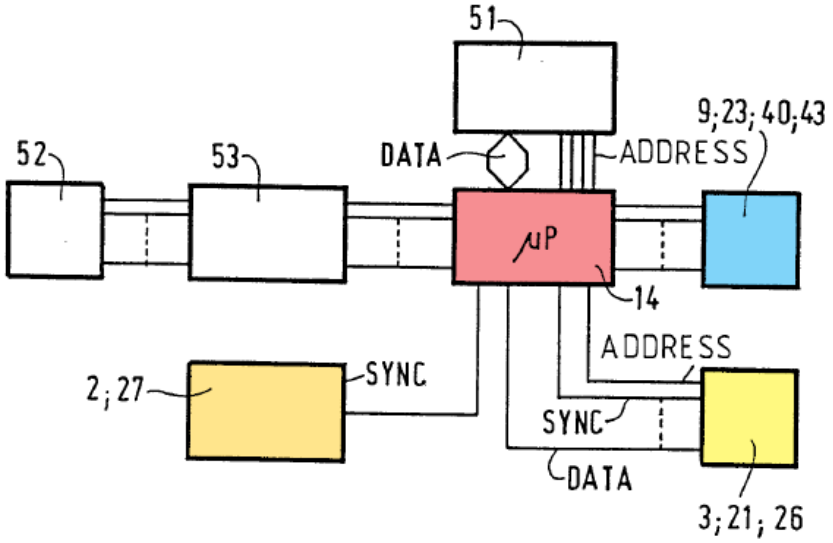

EX1010, FIG. 15 (annotated).

Braun's system "'pattern recognize[s]' presence of *people*…and *spotlight[s] the people* to alert the driver" and "controls illumination…to the *identified features and/or objects*." EX1009, 26:31-27:1, 22:17-23, FIGS. 5-6, 5:21-6:7, 14:21-30, 23:8-24:27; EX1003, ¶¶661-662. A POSA would have understood that Braun discloses "determining an illumination level…for at least a third subsection" because Braun's system "spotlights" (illuminates) "people" and "roadway signs" in particular regions of the roadway scene. EX1009, 4:17-5:1, 7:1-7, 11:14-17, 23:5-7; EX1003, ¶663.

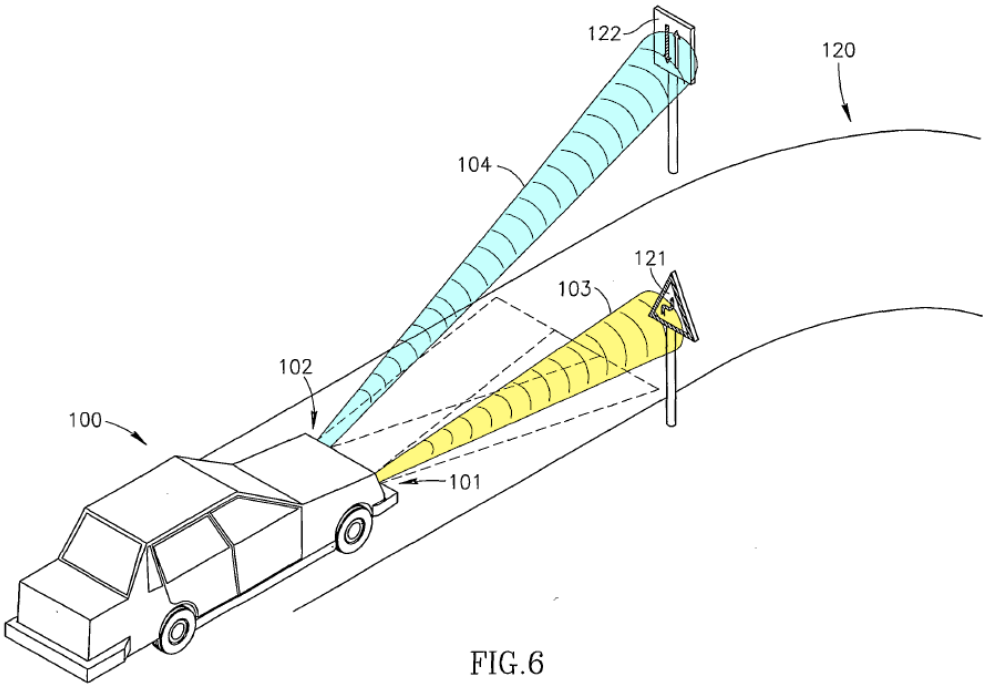

EX1009, FIG. 6 (annotated).

Supra Section XIV.A; EX1003, ¶¶650-656, 664.

Thus, Karlsson-Harbers-Braun renders obvious claims 66-67. EX1003, ¶¶665-673.

XV. PETITIONER IS UNAWARE OF SECONDARY CONSIDERATIONS

Petitioner is not aware of any evidence of alleged secondary considerations of non-obviousness having nexus to the challenged claims. EX1003, ¶¶674-676. Patent Owner submitted alleged evidence in a reexamination of U.S. Patent No. 9,955,551, but the Central Reexamination Unit did not address it. EX1033, ’551 Reexam File History, 66-83, 930-943. Regardless, the ’503 patent involves different claims, for which that evidence is inapplicable. Petitioner reserves the right to address any evidence Patent Owner presents.

XVI. DISCRETIONARY CONSIDERATIONS UNDER SECTIONS 314(A)/325(D) STRONGLY FAVOR INSTITUTION

A. The *Fintiv* factors strongly favor institution.

The *Fintiv* factors strongly favor institution. *Apple Inc. v. Fintiv, Inc.*, IPR2020-00019, Paper 11 (P.T.A.B. Mar. 20, 2020) (precedential); *see* June 21, 2022 Memorandum: Interim Procedure for Discretionary Denials in AIA Post Grant Proceedings with Parallel District Court Litigation ("June 2022 Memo").

Factor 1 is neutral or favors institution. No motion for stay has been filed and the court has not indicated whether it would grant any such motion. Because the Board typically "will not attempt to predict how the district court in the related district court litigation will proceed," *Sand Revolution II, LLC v. Continental Intermodal Group – Trucking LLC*, IPR2019-01393, Paper 24 at 7 (P.T.A.B. June 16, 2020) (informative), factor 1 carries little weight here.

Factor 2 strongly favors institution. The co-pending litigation in the DDE is in its early stages and a trial date has been set for November 18, 2024 (23 months). EX1035, District Court Statistics, 14; *see* June 2022 Memo, 3. Thus, trial would likely occur (if at all) in late-2024—over 5 months after the projected final decision here. *See Mylan Pharma. Inc. v. Bayer Pharma Aktiengesellschaft*, IPR2022-00517, Paper 15 at 8-9 (P.T.A.B. Aug. 9, 2022) (evaluating median time to trial for factor 2).

Factor 3 strongly favors institution. By institution, neither the parties nor the DDE court will have invested significant resources in the litigation. The court issued a scheduling order only on December 14, 2022, but the court has not issued any substantive rulings (e.g., claim construction, dispositive motion). Petitioner's diligence filing this Petition less than 7 months after the complaint, and long before Patent Owner's infringement contentions, confirm that factor 3 strongly favors institution.

Factors 4 and 5 strongly favor institution. Petitioner stipulates that, if the Board institutes this Petition, Petitioner will not raise at trial in parallel litigation any Ground raised here. Petitioner's stipulation mitigates concerns for duplicating efforts and inconsistent conclusions.

Factor 6 strongly favors institution. The Petition's merits are strong. *See* June 2022 Memo, 3-5. Additionally, under factor 6: (1) the Board is best suited to address the technical issues raised here; (2) a decision on the merits at institution may aid the parties in resolving their dispute; and (3) determining patentability will benefit the public, providing a complete record and rationale absent from a jury verdict form. Patent Owner has already sued at least 8 defendants and could potentially sue others in view of the accused technology.

Holistically, the *Fintiv* factors strongly favor institution.

B. *Advanced Bionics* strongly favors institution.

The two-part framework from *Advanced Bionics, LLC v. MED-EL Elektromedizinische Geräte GmbH*, IPR2019-01469, Paper 6 at 8-9 (P.T.A.B. Feb. 13, 2020) (precedential), demonstrates that denial under § 325(d) is not appropriate. Under Part 1, the same or substantially the same art or arguments were not previously presented to the Office, ending the inquiry in favor of institution. No references forming a Ground were applied or cited during the ’503 patent’s prosecution. The “new, noncumulative prior art” asserted here strongly favors institution. *Oticon Medical AB v. Cochlear Ltd.*, IPR2019-00975, Paper 15 at 20 (P.T.A.B. Oct. 16, 2019) (§§ II.B, II.C precedential). If Patent Owner attempts to analogize any previously considered art or arguments to those presented here, Petitioner reserves the right to respond.

XVII. MANDATORY NOTICES (37 C.F.R. § 42.8(A)(1))

A. Real Party In Interest (37 C.F.R. § 42.8(b)(1))

The real party-in-interest is Petitioner Volkswagen Group of America, Inc., which is a subsidiary of Volkswagen AG.

B. Related Matters (37 C.F.R. § 42.8(b)(2))

The ’503 patent is the subject of the following pending civil action: *Torchlight Techs. LLC v. Daimler AG et al.*, Civil No. 1:22-cv-00751 (D. Del.), filed June 7, 2022. Petitioner, Volkswagen Group of America, Inc., was voluntarily dismissed without prejudice from this civil action on September 23, 2022.

SPERO EX. 2005

The ’503 patent claims the benefit of U.S. Patent Nos. 9,955,551 (“the ’551 patent”) and 8,100,552.

U.S. Patent No. 11,208,029 (“the ’029 patent”) claims the benefit of the ’503 patent. On October 3, 2022, Petitioner filed a petition for *inter partes* review of the related ’029 patent (IPR2022-01586).

On November 30, 2022, Petitioner filed another petition for *inter partes* review, IPR2023-00197, against claims 20-25 and 59-64 of the ’503 patent, and institution of both petitions is justified—the petitions address different claim groupings.

C. Lead and Back-up Counsel (37 C.F.R. § 42.8(b)(3))

Pursuant to 37 C.F.R. §§ 42.8(b)(3) and 42.10(a), Petitioner appoints **Michael D. Specht** (Reg. No. 54,463) as lead counsel and **Jason A. Fitzsimmons** (Reg. No. 65,367) as first back-up counsel. Additionally, Petitioner appoints **Danny E. Yonan** (Reg. No. 53,812), **Brian G. Burke** (Reg. No. 75,349), and **Ian B. Soule** (Reg. No. 74,290) as additional back-up counsel, at the address: STERNE, KESSLER, GOLDSTEIN & FOX P.L.L.C., 1100 New York Avenue, N.W., Washington, D.C., 20005, phone (202) 371-2600, and facsimile (202) 371-2540.

D. Service Information (37 C.F.R. § 42.8(b)(4))

Petitioner consents to electronic service by email at the following addresses:

mspecht-PTAB@sternekessler.com

jfitzsimmons-PTAB@sternekessler.com

SPERO EX. 2005

dyonan-PTAB@sternekessler.com

bburke-PTAB@sternekessler.com

isoule-PTAB@sternekessler.com

PTAB@sternekessler.com.

XVIII. CONCLUSION

Petitioner requests institution and a final written decision finding claims 26-36 and 65-70 unpatentable.

Respectfully submitted,

STERNE, KESSLER, GOLDSTEIN & FOX P.L.L.C.

/Michael D. Specht/

Michael D. Specht (Reg. No. 54,463)
Attorney for Petitioner
Volkswagen Group of America, Inc.

Date: December 16, 2022

1100 New York Avenue, N.W.
Washington, D.C. 20005-3934
(202) 371-2600

CERTIFICATE OF COMPLIANCE WITH TYPE-VOLUME LIMITATION, TYPEFACE REQUIREMENTS, AND TYPE STYLE REQUIREMENTS

1. This Petition complies with the type-volume limitation of 14,000 words, comprising 13,961 words, excluding the parts exempted by 37 C.F.R. § 42.24(a).

2. This Petition complies with the general format requirements of 37 C.F.R. § 42.6(a) and has been prepared using Microsoft® Word 2016 in 14 point Times New Roman.

Respectfully submitted,

STERNE, KESSLER, GOLDSTEIN & FOX P.L.L.C.

/Michael D. Specht/

Michael D. Specht (Reg. No. 54,463)
Attorney for Petitioner
Volkswagen Group of America, Inc.

Date: December 16, 2022

1100 New York Avenue, N.W.
Washington, D.C. 20005-3934
(202) 371-2600

CERTIFICATION OF SERVICE (37 C.F.R. §§ 42.6(e), 42.105(a))

The undersigned hereby certifies that on December 16, 2022, true and correct copies of the foregoing **PETITION FOR INTER PARTES REVIEW OF U.S. PATENT NO. 10,894,503**, Petitioner's Power of Attorney, and all associated exhibits were served in their entireties on the following parties via FedEx Express®:

BROOKS KUSHMAN P.C.
1000 Town Center, 22nd Floor
Southfield, Michigan 48075
PAIR Correspondence Address for U.S. Pat. No.: 10,894,503

Respectfully Submitted,

STERNE, KESSLER, GOLDSTEIN & FOX P.L.L.C.

/Michael D. Specht/

Michael D. Specht (Reg. No. 54,463)
Attorney for Petitioner
Volkswagen Group of America, Inc.

Date: December 16, 2022

1100 New York Avenue, N.W.
Washington, D.C. 20005-3934
(202) 371-2600
19330673.docx

Appendix A

Claim 26	Claim 65[9]
[26.P] A method for generating a headlight beam in an adaptive headlight system that provides illumination to at least a portion of a field-of-view, comprising:	[65.P] identical to [26.P]
[26.1] utilizing one or more sensors of a vehicle including the adaptive headlight system to obtain and provide data	[65.1] utilizing one or more sensors of a first vehicle to obtain and provide data,
[26.2] predefined as relevant to a determination of illumination requirements for the field-of-view, the data including data indicative of at least one of one or more other vehicles or a pedestrian;	[65.2] the data including data indicating at least a second vehicle;
[26.3] determining illumination requirements for the field-of-view based on the data sensed by the sensors,	
[26.4] including determining illumination for at least a first subsection of the field-of-view including the other vehicle or pedestrian, as indicated by the sensor data, and	[65.3] determining illumination for at least a first subsection including the second vehicle and
[26.5] for at least a second subsection of the field-of-view not including the other vehicle or pedestrian;	[65.4] at least one or more second subsections, to either side of the first subsection,

[9] Petitioner demonstrates the unpatentability of elements [65.P]-[65.4] of claim 65 by showing that claim 26 is unpatentable.

Claim 26	Claim 65[9]
[26.6] determining a control strategy for controlling one or more directional light clusters in a headlight assembly to create an output headlight beam meeting the determined illumination requirements,	
	[65.5] including determining an illumination level for the first subsection
	[65.6] that substantially illuminates the first subsection below a predefined illuminance, and
	[65.7] determining an illumination level for the one or more second subsections
[26.7] the headlight beam spatial light distribution shaped to provide high beam illumination for a driver of the vehicle, in at least the second subsection,	
	[65.8] that substantially illuminates the one or more second subsections above the predefined illuminance;
[26.8] while mitigating glaring light illuminating at least the first subsection including detected other vehicles or pedestrians;	
[26.9] sending control signals implementing the control strategy to an electronic control circuitry configured to operate the light-clusters; and	

Claim 26	Claim 65[9]
	[65.9] determining control instructions for controlling one or more directional light sources included in the adaptive headlight system to achieve the determined illumination levels for at least the first and one or more second subsections; and
[26.10] controlling the light clusters via the electronic control circuitry to collectively emit the headlight beam meeting the determined illumination requirements.	[65.10] controlling the light sources to emit the headlight beam in accordance with the control instructions.

EX1001, 98:43-99:6, 102:62-103:17 (numbering and spacing added).

Appendix B

CLAIM LISTING

Claim:	Element:	Claim Language:
Claim 26	[26.P]	A method for generating a headlight beam in an adaptive headlight system that provides illumination to at least a portion of a field-of-view, comprising:
	[26.1]	utilizing one or more sensors of a vehicle including the adaptive headlight system to obtain and provide data
	[26.2]	predefined as relevant to a determination of illumination requirements for the field-of-view, the data including data indicative of at least one of one or more other vehicles or a pedestrian;
	[26.3]	determining illumination requirements for the field-of-view based on the data sensed by the sensors,
	[26.4]	including determining illumination for at least a first subsection of the field-of-view including the other vehicle or pedestrian, as indicated by the sensor data, and
	[26.5]	for at least a second subsection of the field-of-view not including the other vehicle or pedestrian;
	[26.6]	determining a control strategy for controlling one or more directional light clusters in a headlight assembly to create an output headlight beam meeting the determined illumination requirements,
	[26.7]	the headlight beam spatial light distribution shaped to provide high beam illumination for a driver of the vehicle, in at least the second subsection,
	[26.8]	while mitigating glaring light illuminating at least the first subsection including detected other vehicles or pedestrians;

Claim:	Element:	Claim Language:
	[26.9]	sending control signals implementing the control strategy to an electronic control circuitry configured to operate the light-clusters; and
	[26.10]	controlling the light clusters via the electronic control circuitry to collectively emit the headlight beam meeting the determined illumination requirements.
Claim 27	-	The method of claim 26, wherein the determining illumination requirements further comprises: determining the illumination requirements based on headlight modes comprising one or more of parking lights, low beam, high beam, cornering lights, load leveling adjustment, integral turn signal indicators, inputtable alternate beam pattern selection, and specified preferential headlight illumination color of the driver.
Claim 28	-	The method of claim 26, wherein the illumination requirements accommodate peripheral night vision of the driver, by defining bluish headlamp illumination along a side of a road, while defining yellow tinted illumination along the road.
Claim 29	-	The method of claim 26, wherein the illumination requirements accommodate sensed fog or snow environmental conditions by defining a shift of at least a portion of the headlight beam towards yellow.
Claim 30	-	The method of claim 26, wherein the control strategy dynamically adapts the headlight beam based on real-time changes to the data sensed by the sensors indicating a change to at least one of beings, objects and preceding vehicles ahead of the first vehicle.

Claim:	Element:	Claim Language:
Claim 31	-	The method of claim 26, further comprising receiving input to an override switch and, responsive to the input, adjusting automatic operation of the headlight system to reflect operator instruction as indicated by the input to the override switch or by further input to a different vehicle input other than the override switch.
Claim 32	-	The method of claim 26, wherein the determining illumination requirements further includes determining illumination for an upcoming curve indicated by the sensor data, wherein the determining the control strategy further comprises determining the control strategy for controlling the directional light clusters to create an output headlight beam that illuminates around the curve.
Claim 33	-	The method of claim 32, wherein the determining illumination requirements further includes determining illumination for an upcoming turn indicated by the sensor data, wherein the determining the control strategy further comprises determining the control strategy for controlling the directional light clusters to create an output headlight beam that illuminates the turn.
Claim 34	-	The method of claim 32, wherein the determining illumination further includes determining illumination the increases illumination of an upcoming turn indicated by the sensor data, wherein the determining the control instructions further comprises determining the control instructions for controlling one or more of the directional light sources to achieve illumination of the turn.

Claim:	Element:	Claim Language:
Claim 35	-	The method of claim 26, wherein the determining illumination requirements further includes determining illumination for an upcoming turn indicated by the sensor data, wherein the determining the control strategy further comprises determining the control strategy for controlling the directional light clusters to create an output headlight beam that illuminates the turn.
Claim 36	-	The method of claim 26, wherein the determining illumination further includes determining illumination the increases illumination of an upcoming turn indicated by the sensor data, wherein the determining the control instructions further comprises determining the control instructions for controlling one or more of the directional light sources to achieve illumination of the turn.
Claim 65	[65.P]	A method for generating a headlight beam in an adaptive headlight system that provides illumination to at least a portion of a field-of-view, comprising:
	[65.1]	utilizing one or more sensors of a first vehicle to obtain and provide data,
	[65.2]	the data including data indicating at least a second vehicle;
	[65.3]	determining illumination for at least a first subsection including the second vehicle and
	[65.4]	at least one or more second subsections, to either side of the first subsection,
	[65.5]	including determining an illumination level for the first subsection
	[65.6]	that substantially illuminates the first subsection below a predefined illuminance, and

Claim:	Element:	Claim Language:
	[65.7]	determining an illumination level for the one or more second subsections
	[65.8]	that substantially illuminates the one or more second subsections above the predefined illuminance;
	[65.9]	determining control instructions for controlling one or more directional light sources included in the adaptive headlight system to achieve the determined illumination levels for at least the first and one or more second subsections; and
	[65.10]	controlling the light sources to emit the headlight beam in accordance with the control instructions.
Claim 66	-	The method of claim 65, wherein the data includes data indicating a pedestrian and wherein the determining illumination includes determining an illumination level, for at least a third subsection including the pedestrian.
Claim 67	-	The method of claim 65, wherein the data includes data indicating a road-sign wherein the determining illumination includes determining an illumination level, for at least a third subsection including the road-sign.
Claim 68	-	The method of claim 65, wherein the determining illumination further includes determining a yellowish illumination color for illumination illuminating a road within the field-of-view and a blueish illumination color for illumination illuminating areas off-road within the field-of-view.
Claim 69	-	The method of claim 65, wherein the data includes data indicating fog or snow environmental conditions and the determining illumination includes determining a shift of at least a portion of the light output from the headlight system towards yellow.

Claim:	Element:	Claim Language:
Claim 70	-	The method of claim 65, wherein the determining illumination further includes determining illumination that increases illumination of an upcoming curve indicated by the data, wherein the determining the control instructions further comprises determining the control instructions for controlling one or more of the directional light sources to achieve illumination around the curve.