US010433687B2

(12) **United States Patent**
Dimbylow

(10) **Patent No.: US 10,433,687 B2**
(45) **Date of Patent: Oct. 8, 2019**

(54) **VACUUM CLEANER**

(71) Applicant: **Dyson Technology Limited**, Wiltshire (GB)

(72) Inventor: **Stephen Robert Dimbylow**, Swindon (GB)

(73) Assignee: **Dyson Technology Limited**, Malmesbury, Wiltshire (GB)

(*) Notice: Subject to any disclaimer, the term of this patent is extended or adjusted under 35 U.S.C. 154(b) by 253 days.

(21) Appl. No.: **15/269,430**

(22) Filed: **Sep. 19, 2016**

(65) **Prior Publication Data**

US 2017/0079491 A1 Mar. 23, 2017

(30) **Foreign Application Priority Data**

Sep. 17, 2015 (GB) 1516499.9

(51) **Int. Cl.**

A47L 5/24	(2006.01)
A47L 9/24	(2006.01)
A47L 9/16	(2006.01)
A47L 5/28	(2006.01)
A47L 9/00	(2006.01)

(52) **U.S. Cl.**

CPC ***A47L 5/24*** (2013.01); ***A47L 5/28*** (2013.01); ***A47L 9/00*** (2013.01); ***A47L 9/1616*** (2013.01); ***A47L 9/1683*** (2013.01); ***A47L 9/24*** (2013.01)

(58) **Field of Classification Search**

CPC . A47L 5/24; A47L 5/28; A47L 9/1616; A47L 9/1625; A47L 9/1641; A47L 9/165; A47L 9/1666; A47L 9/1683; A47L 9/00; A47L 9/242

See application file for complete search history.

(56) **References Cited**

U.S. PATENT DOCUMENTS

1,420,665	A	6/1922	Newcombe	
6,131,239	A	10/2000	White	
8,156,609	B2 *	4/2012	Milne	A47L 5/24 15/344

(Continued)

FOREIGN PATENT DOCUMENTS

CA	2 894 369	3/2009
CA	2 907 308	9/2010

(Continued)

OTHER PUBLICATIONS

DE 10 2008 044 184 A1—Jun. 2009—English Machine Translation.*

(Continued)

Primary Examiner — Marc Carlson
(74) *Attorney, Agent, or Firm* — Morrison & Foerster LLP

(57) **ABSTRACT**

A handheld vacuum cleaner including a handle by which the vacuum cleaner is supported during normal use and a cyclonic separating unit having a longitudinal axis and a dirt collector at one end of the cyclonic separating unit. The cyclonic separating unit includes an end portion having a closed configuration in which dirt is retained within the dirt collector and an open configuration for the removal of dirt from the dirt collector. The handle has a pistol grip configuration in which the handle is inclined with respect to the cyclonic separating unit to form an angle of not less than 85 degrees and not greater than 140 degrees between the handle and the longitudinal axis of the cyclonic separating unit.

11 Claims, 8 Drawing Sheets

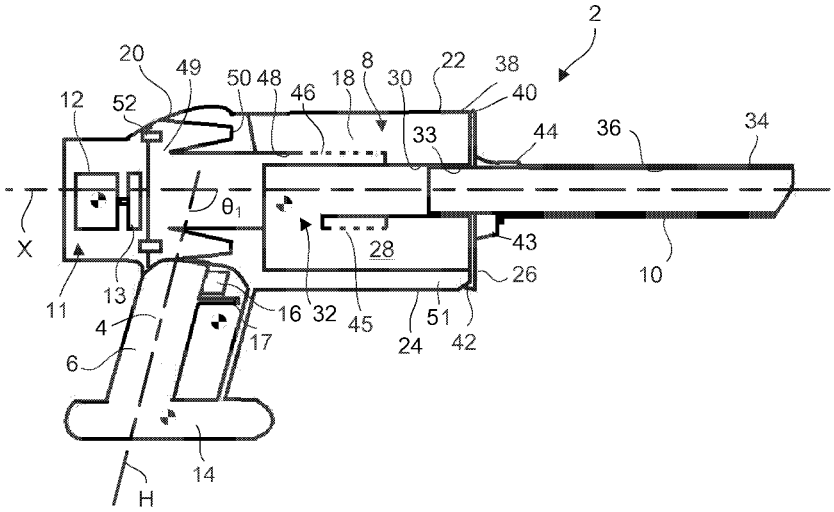

(56) **References Cited**

U.S. PATENT DOCUMENTS

8,167,964	B2	5/2012	Wai	
8,510,907	B2	8/2013	Conrad	
8,607,407	B2	12/2013	Conrad	
9,027,201	B2	5/2015	Conrad	
9,826,868	B2 *	11/2017	Conrad	A47L 5/225
2001/0023517	A1	9/2001	Onishi et al.	
2003/0131441	A1	7/2003	Murphy et al.	
2003/0200621	A1	10/2003	Inoue et al.	
2004/0040270	A1	3/2004	Inoue et al.	
2004/0134022	A1	7/2004	Murphy et al.	
2006/0090290	A1	5/2006	Lau	
2006/0156508	A1	7/2006	Khalil	
2007/0163075	A1	7/2007	Butler et al.	
2008/0040883	A1	2/2008	Beskow et al.	
2008/0271284	A1	11/2008	Wood et al.	
2009/0144931	A1 *	6/2009	Milligan	A47L 5/24 15/344
2010/0132151	A1	6/2010	Khalil et al.	
2010/0175219	A1	7/2010	Soen et al.	
2010/0180398	A1	7/2010	Casper	
2010/0229322	A1	9/2010	Conrad	
2010/0229327	A1	9/2010	Conrad	
2010/0242421	A1	9/2010	Conrad et al.	
2010/0293745	A1	11/2010	Coburn	
2011/0289719	A1	12/2011	Han et al.	
2011/0308036	A1	12/2011	Engström et al.	
2012/0030896	A1	2/2012	Crouch et al.	
2012/0079671	A1 *	4/2012	Stickney	A47L 5/225 15/344
2012/0266576	A1 *	10/2012	Gomiciaga-Pereda	A47L 5/24 55/343
2013/0031742	A1	2/2013	Miefalk et al.	
2014/0041150	A1	2/2014	Sjöberg et al.	
2014/0137363	A1 *	5/2014	Wilson	A47L 5/24 15/347
2014/0366314	A1	12/2014	Conrad	
2014/0366495	A1	12/2014	Stickney et al.	
2015/0208885	A1	7/2015	Conrad	
2016/0037984	A1	2/2016	Park et al.	
2016/0113455	A1 *	4/2016	Horvath	A47L 9/12 15/344
2016/0143495	A1	5/2016	Conrad	
2016/0150923	A1	6/2016	Conrad	
2016/0174785	A1	6/2016	Conrad	
2016/0174787	A1 *	6/2016	Conrad	A47L 5/24 15/329
2016/0174789	A1	6/2016	Han et al.	
2017/0071426	A1 *	3/2017	Krebs	A47L 9/322
2017/0079489	A1 *	3/2017	Dimbylow	A47L 5/24
2017/0079490	A1 *	3/2017	Dimbylow	A47L 5/24

FOREIGN PATENT DOCUMENTS

CA	2 917 900		9/2010	
CH	203675		3/1939	
CN	2529599		1/2003	
CN	1726857		2/2006	
CN	2812826		9/2006	
CN	2927961		8/2007	
CN	101061932		10/2007	
CN	201346180		11/2009	
CN	201755193		3/2011	
CN	102217912		10/2011	
CN	102525349		7/2012	
CN	202776167		3/2013	
CN	202776168		3/2013	
CN	202932850		5/2013	
CN	203724037		7/2014	
CN	203724037 U	*	7/2014	
CN	104840152		8/2015	
CN	204698456		10/2015	
CN	105662271		6/2016	
CN	205322247		6/2016	
DE	661573		6/1938	
DE	1 407 995		2/1969	
DE	2 153 664		7/1972	
DE	10 2005 056 922		5/2007	
DE	10 2008 044 184		6/2009	
DE	102008044184 A1	*	6/2009	A47L 5/24
DE	10 2009 041 728		6/2010	
DE	10 2011 007 373		10/2012	
EP	1 752 076		2/2007	
EP	1958560		8/2008	
FR	553202		5/1923	
FR	1094603		5/1995	
GB	2440111		1/2008	
GB	2484146		4/2012	
GB	2508035		5/2014	
JP	48-54259		7/1973	
JP	48-54260		7/1973	
JP	48-107459		12/1973	
JP	54-27573		3/1979	
JP	3-65545		6/1991	
JP	2001-353110		12/2001	
JP	2002-85297		3/2002	
JP	2003-70706		3/2003	
JP	2003-204903		7/2003	
JP	2003-250729		9/2003	
JP	2004-89241		3/2004	
JP	2004-201875		7/2004	
JP	2005-261963		9/2005	
JP	2005-270312		10/2005	
JP	2006-87961		4/2006	
JP	2006-230815		9/2006	
JP	2008-73221		4/2008	
JP	2008-79920		4/2008	
JP	2008-206613		9/2008	
JP	2009-261501		11/2009	
JP	2009-279284		12/2009	
JP	2009-543642		12/2009	
JP	2014-124443		7/2014	
KR	2008-0110720		12/2008	
KR	2011-0119176		11/2011	
KR	10-1507922		4/2015	
KR	10-2015-0125223		11/2015	
SE	0702236		8/2008	
TR	2012-10114		12/2012	
WO	WO-00/19881		4/2000	
WO	WO-2007/104238		9/2007	
WO	WO 2007104238 A1	*	9/2007	A47L 5/24
WO	WO-2010/147247		12/2010	

OTHER PUBLICATIONS

Search Report dated Feb. 29, 2016, directed to GB Application No. 1516499.9; 1 page.

International Search Report and Written Opinion dated Oct. 28, 2016, directed to International Application No. PCT/GB2016/052611; 10 pages.

First Office Action dated Aug. 31, 2018, directed to CN Application No. 2016108303641; 16 pages.

Notice of Reasons for Rejection dated Sep. 3, 2018, directed to JP Application No. 2016-175409; 6 pages.

* cited by examiner

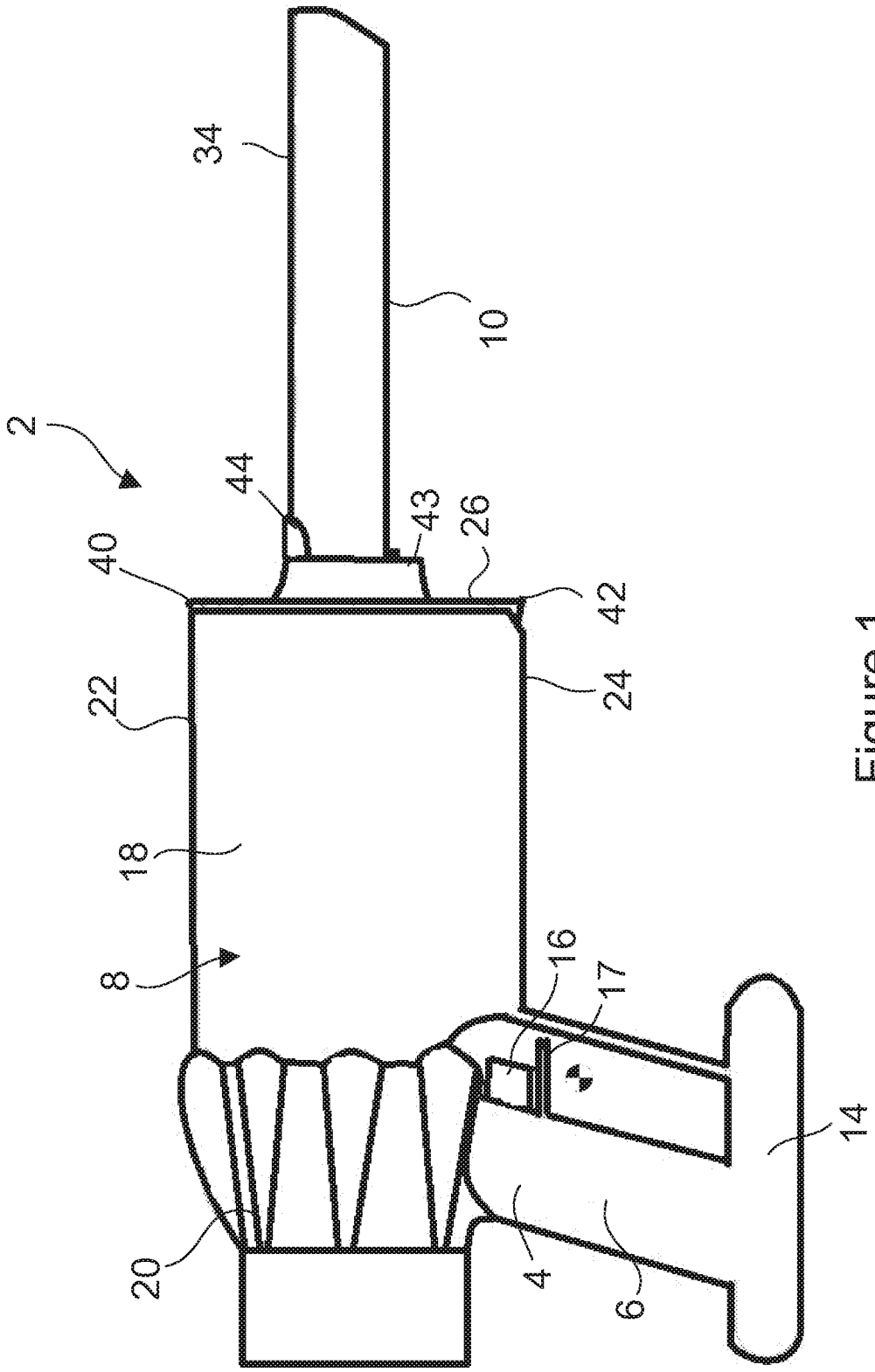

Figure 1

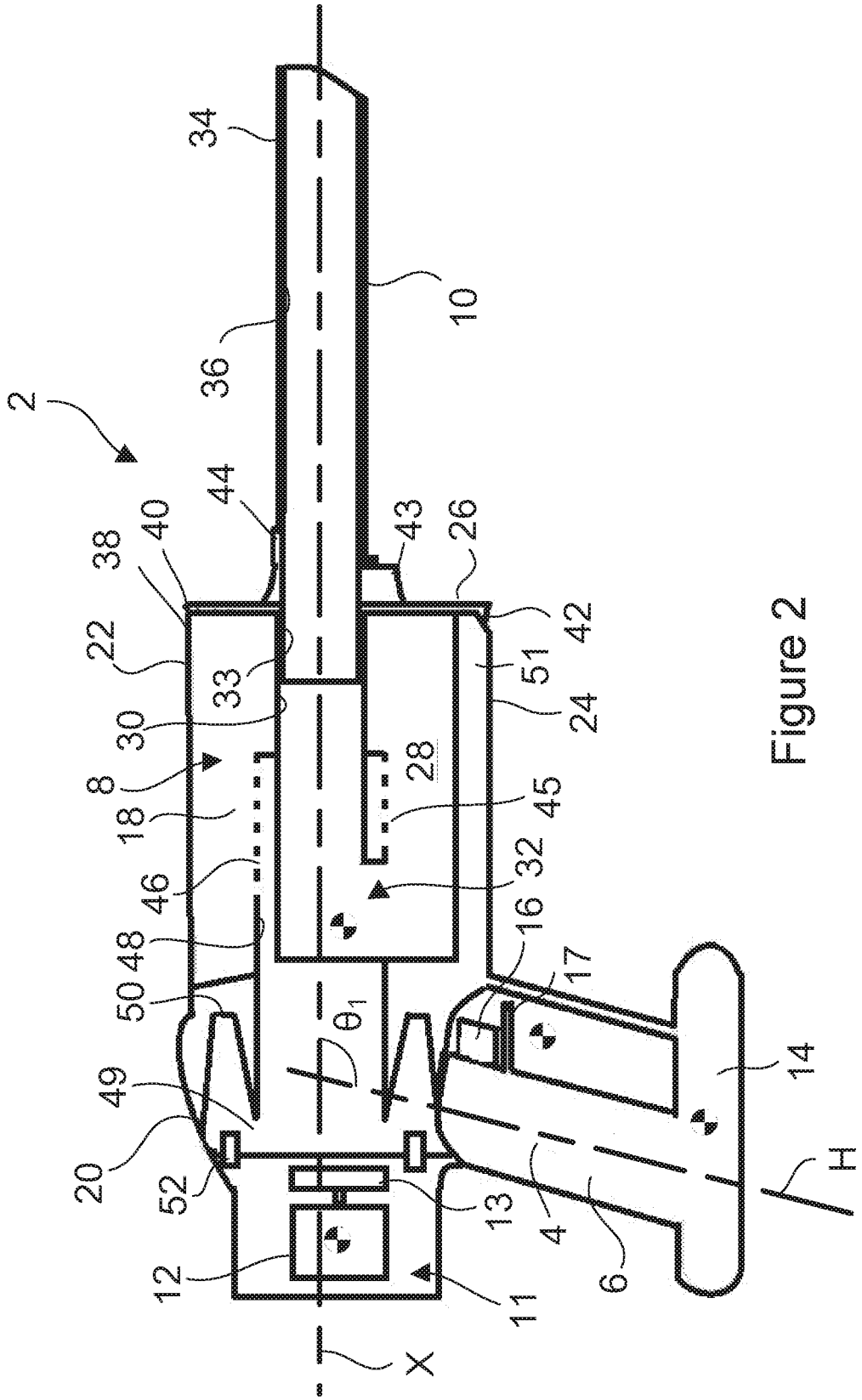
2
34
10
36
44
43
26
38
40
42
22
33
51
30
24
8
28
18
45
46
32
48
16
50
17
θ_1
49
14
20
52
13
H
12
4
11
6
X

Figure 2

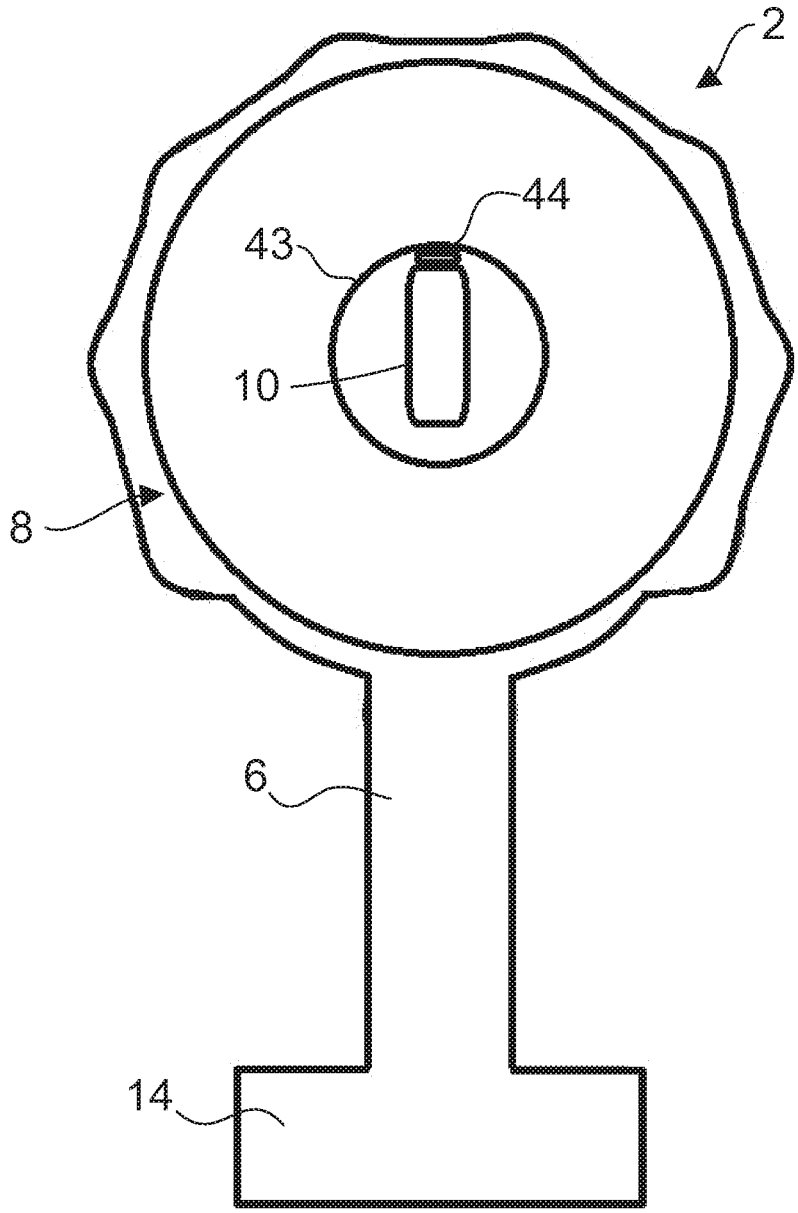

Figure 3

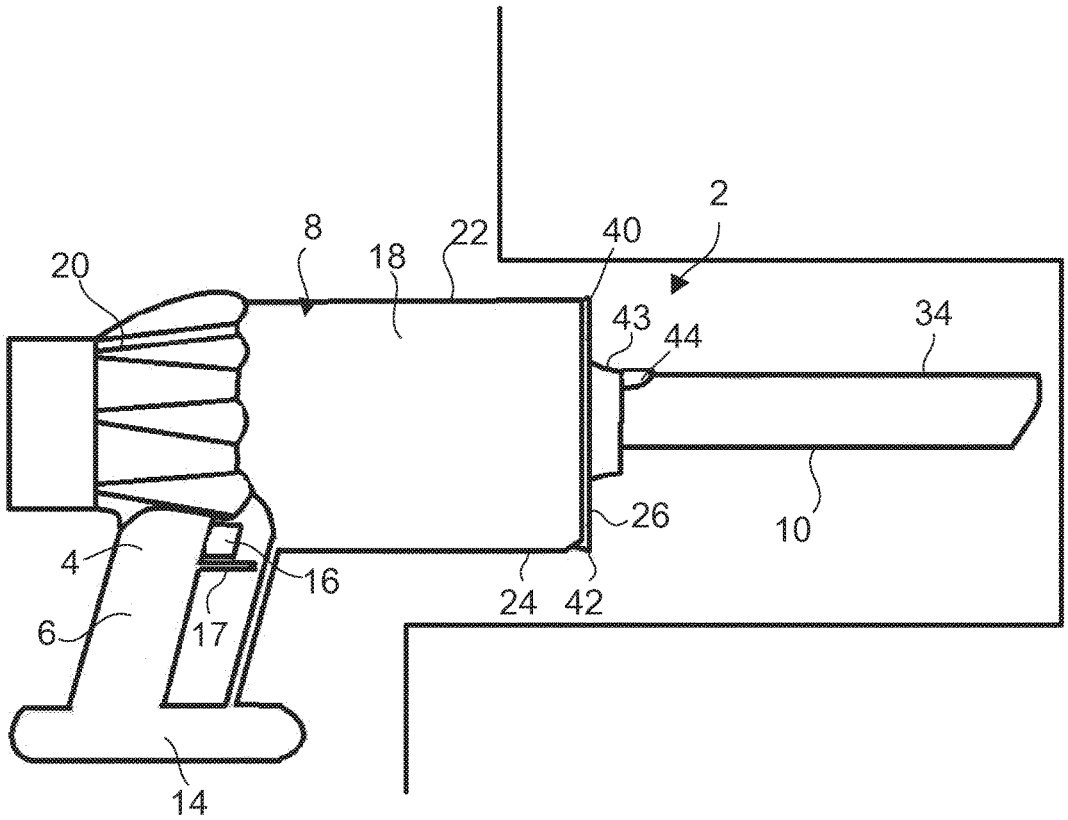

Figure 4

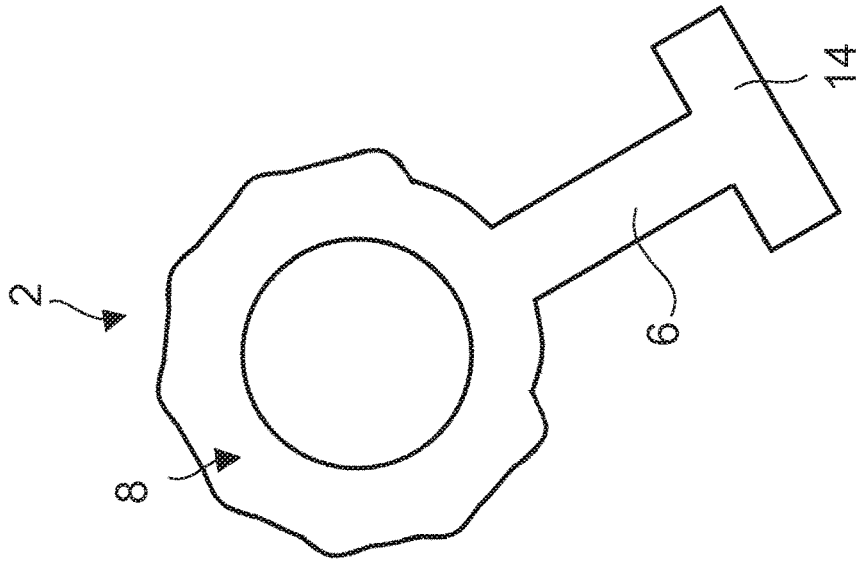

Figure 5c

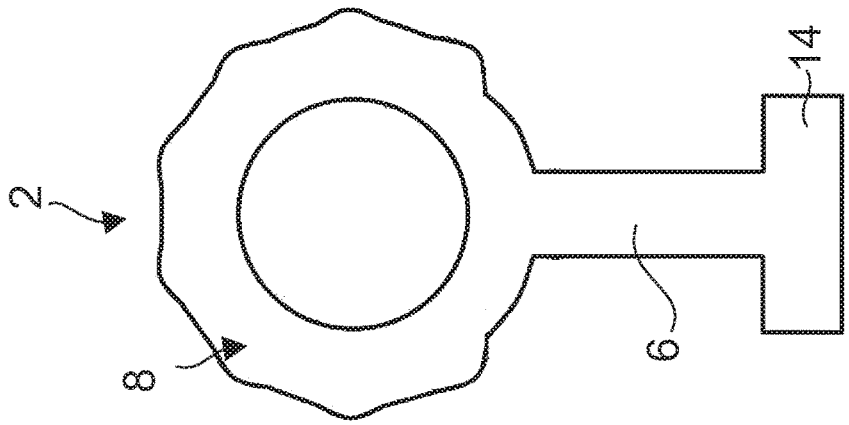

Figure 5b

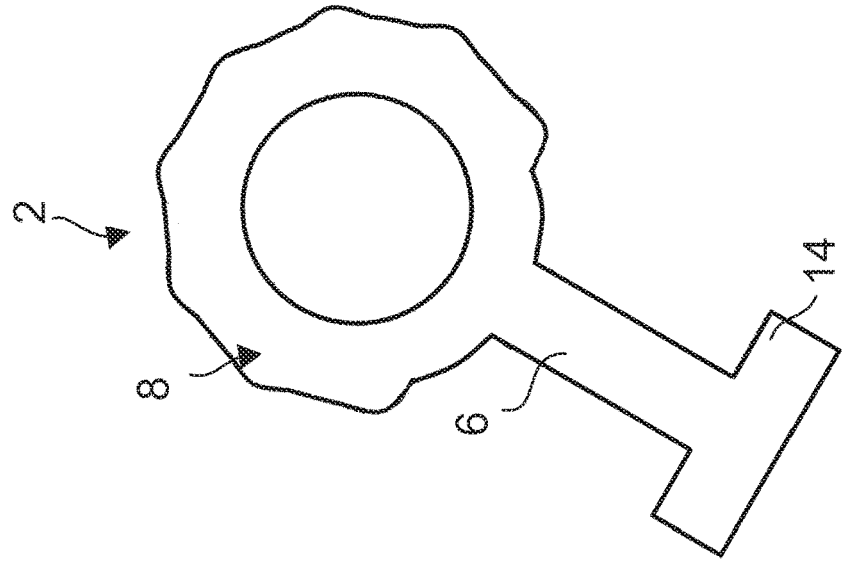

Figure 5a

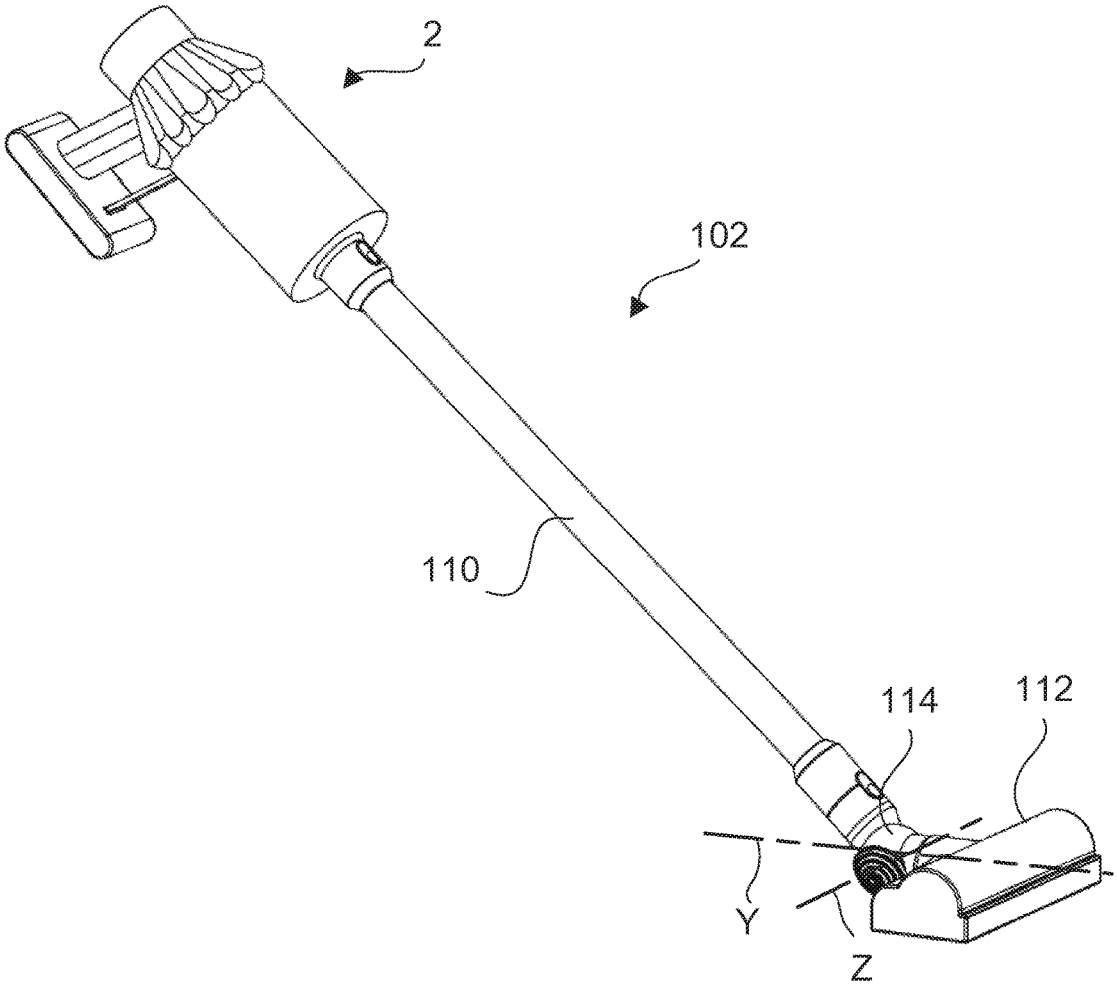

Figure 6

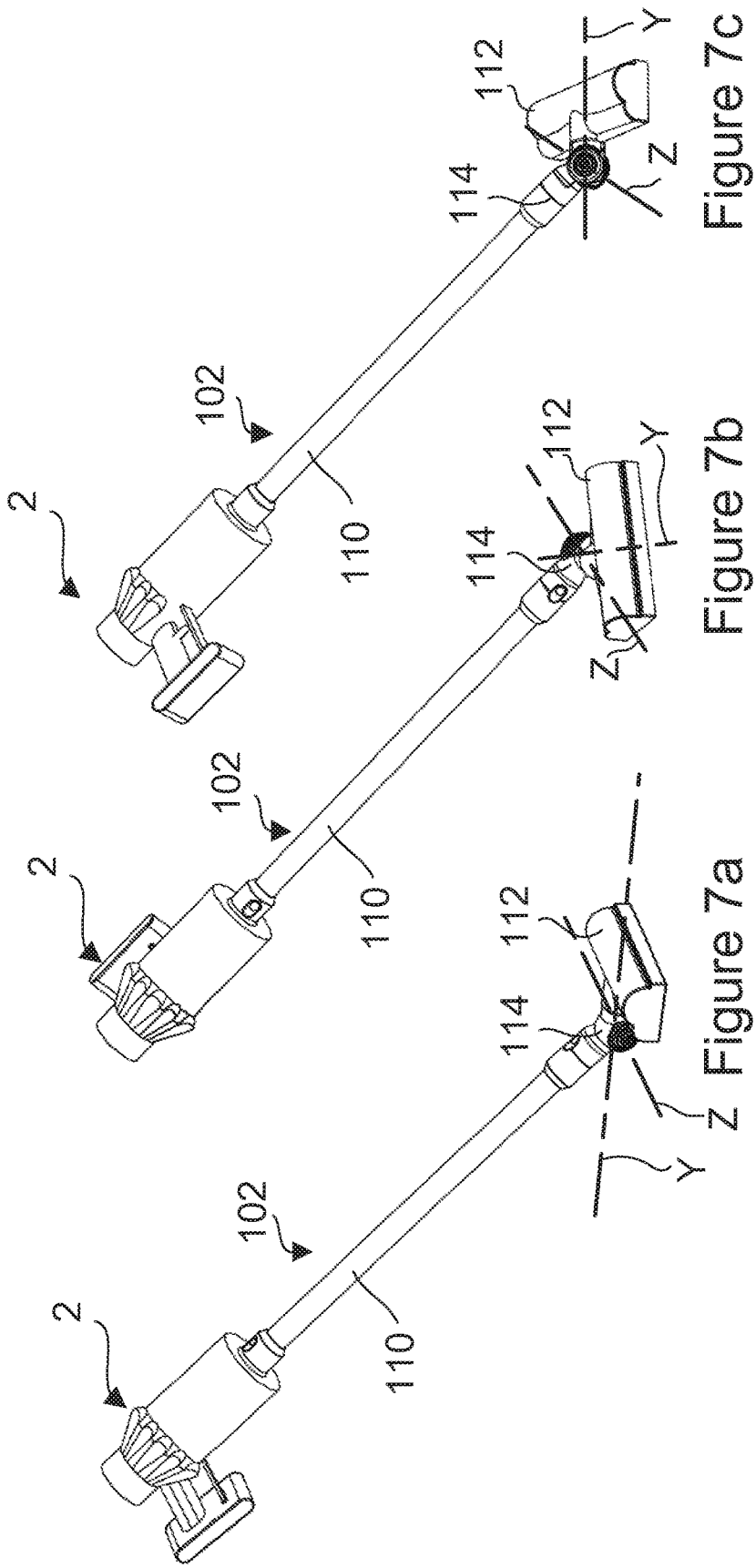

Figure 7a

Figure 7b

Figure 7c

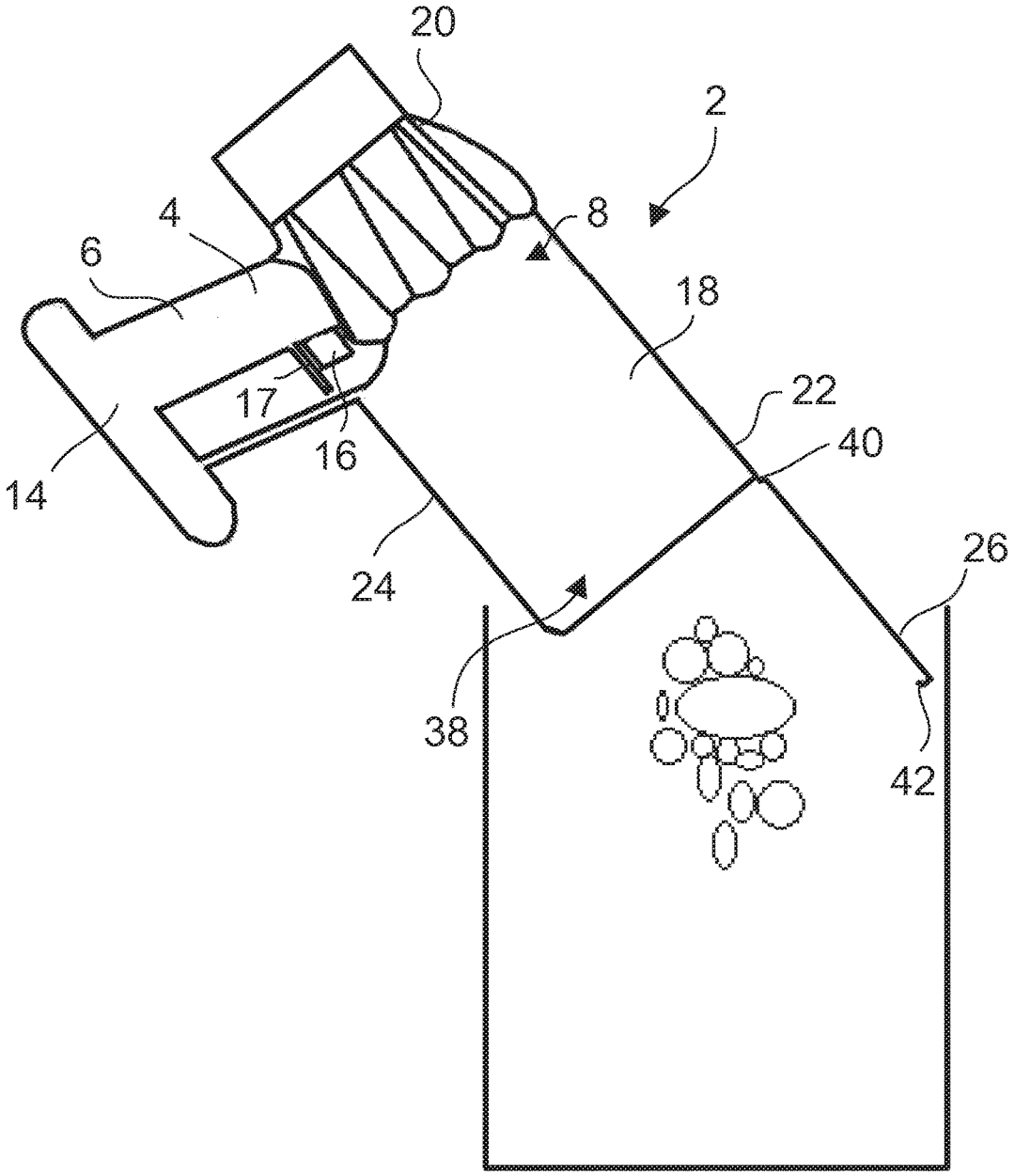

Figure 8

VACUUM CLEANER

REFERENCE TO RELATED APPLICATIONS

This application claims the priority of United Kingdom Application No. 1516499.9, filed Sep. 17, 2015, the entire contents of which are incorporated herein by reference.

FIELD OF THE INVENTION

This invention relates to a handheld vacuum cleaner comprising a cyclonic separating unit.

BACKGROUND OF THE INVENTION

GB2440111B discloses a handheld vacuum cleaner comprising a main body having a handle and cyclonic separator arranged such that it extends alongside the handle. The cyclonic separator comprises a collector for collecting dirt separated by the cyclonic separator. The collector has a base that is pivotally mounted to an outer wall of the collector and held in a closed position by a catch. Release of the catch allows the base to swing open so that the collector can be emptied.

In order to empty the collector, a user positions the base over a waste bin and then releases the catch. The base swings open and dirt which has been collected falls from the collector into the waste bin. Although the arrangement provides a simple way in which to empty the collector, it is slightly awkward because the user typically has to twist his or her hand to one side or upwardly in order to direct the dirt away from themselves into the waste bin. An improved arrangement is therefore desirable.

SUMMARY OF THE INVENTION

According to the invention there is provided a handheld vacuum cleaner comprising a handle by which the vacuum cleaner is supported during normal use, a cyclonic separating unit having a longitudinal axis and a dirt collector at one end of the cyclonic separating unit, the cyclonic separating unit comprising an end portion having a closed configuration in which dirt is retained within the dirt collector by the end portion and an open configuration for the removal of dirt from the dirt collector, wherein the handle has a pistol grip configuration in which the handle is inclined with respect to the cyclonic separating unit to form an angle of not less than 85 degrees and not greater than 140 degrees between the handle and the longitudinal axis of the cyclonic separating unit.

A handheld vacuum cleaner in accordance with the invention can be emptied by pointing the cyclonic separating unit away from the user and opening the end portion while maintaining a natural grip on the handle. The process of emptying the dirt collector is therefore both ergonomic and intuitive. Furthermore, there is a low risk of the user coming into contact with the dirt as it is emptied because the dirt collector opens away from user.

The handle may be inclined with respect to the cyclonic separating unit to form an angle of not less than 100 degrees and not greater than 125 degrees between the handle and the longitudinal axis of the cyclonic separating unit.

The end portion may comprise an end wall of the cyclonic separating unit. The end portion may be arranged to pivot between the closed configuration and the open configuration.

The cyclonic separating unit may comprise a dirty air inlet through the end portion. The handheld vacuum cleaner may further comprise a connector and a cleaning tool connectable to the connector, wherein the cleaning tool is configured such that when the end portion is in the closed configuration and the cleaning tool is connected to the connector movement of the end portion from the closed configuration into the open configuration is prevented.

The cleaning tool may comprise a collar which abuts the end portion in order to hold the end portion in the closed configuration. The dirt collector may be disposed forward of the handle.

The longitudinal axis of the cyclonic separating unit may extend in a plane which is located above the handle.

The cyclonic separating unit may comprise a cyclonic separation chamber having an axis that defines the longitudinal axis of the cyclonic separating unit.

BRIEF DESCRIPTION OF THE DRAWINGS

In order to better understand the present invention, and to show more clearly how the invention may be put into effect, the invention will now be described, by way of example, with reference to the following drawings:

FIG. **1** is a profile view of a handheld vacuum cleaner;

FIG. **2** is a profile sectional view of the handheld vacuum cleaner shown in FIG. **1**;

FIG. **3** is a front view of the handheld vacuum cleaner shown in FIG. **1**;

FIG. **4** shows the handheld vacuum cleaner shown in FIG. **1**, in use;

FIGS. **5***a*, **5***b* and **5***c* are representations of the handheld vacuum cleaner shown in FIG. **1** in different orientations;

FIG. **6** is a perspective view of a stick vacuum cleaner comprising the handheld vacuum cleaner shown in FIG. **1**;

FIGS. **7***a*, **7***b* and **7***c* are show different orientations of the vacuum cleaner shown in FIG. **6**; and

FIG. **8** shows the vacuum cleaner shown in FIG. **1** being emptied.

DETAILED DESCRIPTION OF THE INVENTION

FIGS. **1** and **2** show a handheld vacuum cleaner **2** comprising a main body **4** having an elongate handle **6**, a cyclonic separating unit **8** having a longitudinal axis X and a cleaning tool **10**, in the form of a nozzle, which is secured to the cyclonic separating unit **8**. The cyclonic separating unit **8** extends away from the handle **6** such that the cleaning tool **10** is at the end of the cyclonic separating unit **8** which is furthest from the handle **6**. The cleaning tool **10** extends away from the cyclonic separating unit **8** along the longitudinal axis X of the cyclonic separating unit **8**.

The main body **4** further comprises a suction generator **11** comprising a motor **12** and impeller **13** which are located above and towards the rear of the handle **6**, and a battery **14** located directly below the handle **6**. An actuator in the form of a finger-operated trigger **16** is provided at an upper portion of the handle **6**. A trigger guard **17** extends forwardly from the handle below the trigger **16**. The handle **6** is arranged at an angle θ**1** with respect to the longitudinal axis X of the cyclonic separating unit **8** such that the handle **6** is in a pistol grip configuration. In the embodiment shown, a handle axis H is arranged at 110 degrees with respect to the longitudinal axis X of the cyclonic separating unit **8**. The angle θ**1** is the included angle between the longitudinal axis

X extending forward of the handle **6** and the portion of the handle axis H extending through the handle **6**.

The cyclonic separating unit **8** comprises a primary cyclonic separator **18** and a plurality of secondary cyclonic separators **20** positioned downstream of the primary cyclonic separator **18**. The primary cyclonic separator **18** is adjacent a first end of the cyclonic separating unit **8** and the secondary cyclonic separators **20** are adjacent a second end of the cyclonic separating unit **8** which is opposite the first end. The secondary cyclonic separators **20** are arranged in a circular array which extend about the longitudinal axis X of the cyclonic separating unit **8**.

The primary cyclonic separator **18** comprises a separator body **22** in the form of a bin having a cylindrical outer wall **24** and an end wall **26**. The cylindrical outer wall **24** defines a cyclonic separation chamber **28**. In the embodiment shown, it is the axis of the cyclonic separation chamber **28** which defines the longitudinal axis X of the cyclonic separating unit **8**. A central duct **30** extends from the end wall **26** to an inlet **32** of the cyclonic separation chamber **28**.

The cleaning tool **10** comprises a connector portion **33** and a nozzle portion **34** which define a duct **36** along the cleaning tool **10**. The connector portion **33** has an outer diameter which is smaller than the inner diameter of the portion of the central duct **30** adjacent the end wall **26** such that the connector portion **33** can be inserted into the central duct **30** (as illustrated) thereby ensuring a rigid connection between the cleaning tool **10** and the cyclonic separating unit **8**.

The central duct **30** and the duct **36** through the cleaning tool **10** together define an inlet duct **30**, **36** which extends coaxially with the longitudinal axis X and through the end of the cyclonic separating unit **8** which is furthest from the handle **6**. The inlet **32** of the cyclonic separation chamber **28** is spaced away from the end wall **26** and is located towards the end of the primary cyclonic separator **18** which is opposite the end of the cyclonic separating unit **8** to which the cleaning tool **10** is connected. The cyclonic separation chamber **28** therefore surrounds the portion of the inlet duct formed by the central duct **30**. A first portion of the central duct **30** leading from the end wall **26** extends along the axis X of the cyclonic separation chamber **28**. A second portion of the central duct **30** extends from the first portion to the inlet **32** of the cyclonic separation chamber **28**. The second portion extends in a direction which has both radial and circumferential components with respect to the cyclonic separation chamber **28** so as to promote rotational flow within the cyclonic separation chamber **28** during use.

The end wall **26** and the portion of the cylindrical outer wall **24** adjacent the end wall **26** define a dirt collector **38**, which is in the form of a dirt collecting bin, in which dirt separated from the incoming flow by the primary cyclonic separator **18** is collected.

The end wall **26** is connected to the cylindrical outer wall **24** by a pivot **40** and is held in a closed position by a user-operable catch **42**. The end wall **26** can be moved from the closed position, in which dirt is retained within the dirt collector **38**, to an open position, in which dirt can be removed from the dirt collector **38**, by releasing the catch **42** and pivoting the end wall **26** away from the end of the cylindrical outer wall **24**. The cleaning tool **10** is provided with retaining features (not shown) which engage with the central duct **30** so as to secure the cleaning tool **10** to the central duct **30**. The cleaning tool **10** further comprises an annular collar **43** that abuts the end wall **26** thereby holding the end wall **26** in the closed position, and so prevents accidental opening of the end wall **26** while the cleaning tool **10** is attached. The cleaning tool **10** has a manually operated catch **44** that is actuated in order to disengage the retaining features from the central duct **24** in order to remove the tool **10** form the cyclonic separating unit **8**.

A cylindrical shroud **45** is disposed centrally within the cyclonic separation chamber **28** and extends coaxially with the axis of the chamber **28**. Apertures **46** provided through the shroud **45** define a fluid outlet from the cyclonic separation chamber **28**.

A duct **48**, which is formed in part by the shroud **45**, provides fluid communication between the outlet from the cyclonic separation chamber formed by the apertures **46** and inlets **49** of the secondary cyclonic separators **20**. Each secondary cyclonic separator **20** has a solids outlet **50** at one end which is in communication with a fine dust collector **51** that extends along the side of the primary cyclonic separator **18**. A fluid outlet **52** at the end of each of the secondary cyclonic separators **20** opposite the solids outlet **50**.

The cyclonic separating unit **8**, suction generator **11** and battery **14** are expected to be the heaviest components of the vacuum cleaner **2**. The separator **8** has a centre of gravity which is forward of the trigger guard **17** and so generates a clockwise moment about the trigger **16** and the trigger guard **17** (as viewed in FIG. **2**). The battery **14** has a centre of gravity which is rearward of the trigger guard **17**. The battery **14** therefore exerts an anticlockwise moment about the trigger **16** and the trigger guard **17**. The suction generator **11** also has a centre of gravity which is rearward of the trigger guard **17**. The cyclonic separating unit **8**, suction generator **11** and battery **14** are positioned such that the net moment of all of the components of the vacuum cleaner **2** about an axis that extends perpendicularly with respect to the handle **6** and the longitudinal axis X of the cyclonic separating unit **8** and which passes through a region immediately below the trigger guard **17** is zero. The centre of gravity of the vacuum cleaner **2** is therefore located within the region below the trigger guard **17** such that when the trigger **16** is released by a user, the handheld vacuum cleaner **2** is balanced about a point below the trigger guard **17** and so can be supported easily by the rest of the user's fingers on the handle **6** and the upper finger against the trigger guard **17** without tipping forwards or backwards. Furthermore, the vacuum cleaner **2** can be supported on the battery **14**, which forms a base of the vacuum cleaner **2**, without toppling over.

FIG. **3** shows the vacuum cleaner **2** from the front. The cleaning tool **10** is relatively straight and slender and extends along the longitudinal axis X. The cleaning tool **10** therefore extends within the outer profile of the cyclonic separating unit **8** as viewed from the front of the vacuum cleaner **2** along the longitudinal axis X.

In use, the handheld vacuum cleaner **2** is activated by a user pressing the trigger **16** with an index finger. Dirty air is drawn by the suction generator **11** through the inlet duct **30**, **36** and through the inlet **32** into the cyclonic separation chamber **28**. The rotational flow promoted by the second portion of the central duct **30** within the cyclonic separation chamber **28** produces a cyclonic action that separates relatively heavy or large dirt from the air. Typically, the vacuum cleaner **2** is held such that the cyclonic separating unit **8** points downwardly from the handle **6**. Dirt separated in the cyclonic separation chamber **28** therefore falls under the influence of gravity into the dirt collector **38**. The partially cleaned air passes through the apertures **46** in the shroud **45** and is drawn along the duct **48** to the secondary cyclones **20**. Smaller and lighter particles of dirt are separated from the air by the secondary cyclones **20** and expelled through the respective solids outlets into the fine dust collector **51**. The

cleaned air exits the secondary cyclones **20** via the respective fluid outlets **52** of the secondary cyclones **20** through the suction generator **11** and out of vents (not shown) at the rear of the main body **4**.

The alignment of the axis X of the cyclonic separating unit **8** with the cleaning tool **10** makes the vacuum cleaner **2** compact and enables the end of the cyclonic separating unit **8** to be inserted into confined spaces during cleaning, as illustrated in FIG. **4**. The vacuum cleaner **2** is therefore particularly suitable for cleaning places that are difficult to reach, such as gaps between items of furniture, walls and appliances. Furthermore, the cyclonic separating unit **8** can be rotated substantially within its own profile during cleaning. That is, the area swept by the cyclonic separating unit **8** (as viewed along the longitudinal axis X) as the cyclonic separating unit **8** is rotated about its longitudinal axis X, is not significantly greater than the actual area occupied by the cyclonic separating unit **8**. A schematic illustration of the vacuum cleaner **2** with the handle in a vertical orientation is shown in FIG. **5***b*. FIGS. **5***a* and **5***c* show the vacuum cleaner **2** rotated through 45 degrees away from the orientation shown in FIG. **5***b* in each direction. The cyclonic separating unit **8** can therefore be rotated clockwise and anticlockwise within the confined space without colliding with surfaces of the confined space, and so can be manipulated easily in order to clean hard-to-reach surfaces.

In addition to the above benefits, the alignment of the cleaning tool **10** with the longitudinal axis X ensures that the inclination angle of the cyclonic separating unit **8** does not vary as the vacuum cleaner **2** is rotated about the longitudinal axis X and so the separation of efficiencies of the primary cyclonic separator **18** and the secondary cyclonic separators **20** remain approximately constant during use. This is particularly advantageous when the cleaning tool **10** is replaced with a wand **110** and a cleaner head **112** to form a stick vacuum cleaner **102**, as shown in FIG. **6**.

The wand **110** extends coaxially with the longitudinal axis X of the cyclonic separating unit **8**. The cleaner head **112** comprises an articulated neck **114** having first and second rotational axes Y, Z that are arranged perpendicular to each other. The arrangement of the axes Y, Z is such that, when the cleaner head **112** is placed on a surface with the wand **110** inclined with respect to the surface, rotation of the stick vacuum cleaner **102** about the longitudinal axis X of the cyclonic separating unit **8** (and hence rotation of the wand **110** about the wand axis) causes the cleaner head **112** to steer left or right, as shown in FIGS. **7***a* to **7***c*.

As mentioned above, the inclination of the longitudinal axis X of the cyclonic separating unit **8** remains substantially constant as the cleaner head **114** is steered across a surface being cleaned. Consequently, unlike known stick vacuum cleaners, the cyclonic separation efficiency remains substantially constant and the risk of re-entrainment remains low.

A further benefit is that the centre of gravity of the cyclonic separating unit **8** is located at or close to the axis of the wand **110**. Consequently, the weight balance of the cyclonic separating unit **8** about the axis of the wand **110** remains approximately constant as the cyclonic separating unit **8** is rotated during cleaning. The vacuum cleaner **2** is therefore easy to manoeuvre.

Referring to FIG. **8**, in order to empty the dirt collector **38** and the fine dust collector **51** of either of the described embodiments, the user first disconnects the cleaning tool **10** or the wand **110**. Then, whilst gripping the handle **6**, the user points the vacuum cleaner **2** towards a suitable receptacle (e.g. a waste bin or bag) into which the dirt is to be emptied. The catch **42** is then released by the user and the end wall **26** pivoted from its closed position into its open position. Since the cyclonic separating unit **8** is pointed away from the user, there is no need for the user to adopt a different grip or posture from that which is adopted during normal cleaning. Consequently, the process by which the dirt collector **38** and the fine duct collector **51** are emptied is very intuitive and ergonomic. Furthermore, dirt exits the dirt collector **38**/fine dust collector **51** from the end of the cyclonic separating unit **8** which is furthest from the handle **6**. Therefore, there is less risk that dirt will spill from the dirt collector **38**/fine dust collector **51** onto a user during emptying.

In an alternative arrangement, the inlet duct may be spaced from the axis of the cyclonic separating unit **8**. Nevertheless, the cyclonic separating unit may be arranged to extend partly around a portion of the inlet duct or to entirely surround a portion of the inlet duct. For example, the inlet duct may be recessed into the side of the cyclonic separating unit such that duct extends within the profile of the cyclonic separating unit when viewed along the axis of the cyclonic separating unit.

The invention claimed is:

1. A handheld vacuum cleaner comprising:

a handle by which the vacuum cleaner is supported during normal use;

a cyclonic separating unit having a longitudinal axis and a dirt collector at one end of the cyclonic separating unit, the cyclonic separating unit comprising an end wall having a closed configuration in which dirt is retained within the dirt collector by the end wall and an open configuration for the removal of dirt from the dirt collector, wherein the end wall is movable relative to the longitudinal axis and, when the end wall is in the closed configuration, the longitudinal axis extends through a region bounded by a perimeter of the end wall, wherein the handle has a pistol grip configuration in which the handle is inclined with respect to the cyclonic separating unit to form an angle of not less than 85 degrees and not greater than 140 degrees between a handle axis and the longitudinal axis of the cyclonic separating unit, and wherein the handle axis and the longitudinal axis intersect within the vacuum cleaner.

2. The handheld vacuum cleaner of claim **1**, wherein the handle is inclined with respect to the cyclonic separating unit to form an angle of not less than 100 degrees and not greater than 125 degrees between the handle axis and the longitudinal axis of the cyclonic separating unit.

3. The handheld vacuum cleaner of claim **1**, wherein the end wall comprises an end wall of the cyclonic separating unit.

4. The handheld vacuum cleaner of claim **1**, wherein the end wall is arranged to pivot between the closed configuration and the open configuration.

5. The handheld vacuum cleaner of claim **1**, wherein the cyclonic separating unit comprises a dirty air inlet through the end wall.

6. The handheld vacuum cleaner of claim **1**, further comprising a connector and a cleaning tool connectable to the connector, wherein the cleaning tool is configured such that when the end wall is in the closed configuration and the cleaning tool is connected to connector movement of the end wall from the closed configuration into the open configuration is prevented.

7. The handheld vacuum cleaner of claim **6**, wherein the cleaning tool comprises a collar which abuts the end wall in order to hold the end wall in the closed configuration.

8. The handheld vacuum cleaner of claim **1**, wherein the dirt collector is disposed forward of the handle.

9. The handheld vacuum cleaner of claim **1**, wherein the longitudinal axis of the cyclonic separating unit extends in a plane which is located above the handle.

10. The handheld vacuum cleaner of claim **1**, wherein the cyclonic separating unit comprises a cyclonic separator having an axis that defines the longitudinal axis of the cyclonic separating unit.

11. The handheld vacuum cleaner of claim **1**, wherein the handle axis and the longitudinal axis intersect at a location that is within the vacuum cleaner and spaced from the handle.

* * * * *