(12) INTERNATIONAL APPLICATION PUBLISHED UNDER THE PATENT COOPERATION TREATY (PCT)

(19) World Intellectual Property Organization
International Bureau

(43) International Publication Date
24 January 2008 (24.01.2008)

PCT

(10) International Publication Number
WO 2008/009888 A1

(51) International Patent Classification:
A47L 5/24 (2006.01)

(21) International Application Number:
PCT/GB2007/002536

(22) International Filing Date: 6 July 2007 (06.07.2007)

(25) Filing Language: English

(26) Publication Language: English

(30) Priority Data:
0614235.0 18 July 2006 (18.07.2006) GB

(71) Applicant *(for all designated States except US)*: **DYSON TECHNOLOGY LIMITED** [GB/GB]; Tetbury Hill, Malmesbury Wiltshire SN16 0RP (GB).

(72) Inventors; and
(75) Inventors/Applicants *(for US only)*: **DYSON, James** [GB/GB]; Dyson Technology Limited, Tetbury Hill, Malmesbury Wiltshire SN16 0RP (GB). **HICKMOTT, Richard Morgan** [GB/GB]; Dyson Technology Limited, Tetbury Hill, Malmesbury Wiltshire SN16 0RP (GB). **GAMMACK, Peter David** [GB/GB]; Dyson Technology Limited, Tetbury Hill, Malmesbury Wiltshire SN16 6RP (GB).

(74) Agents: **SMITH, Gillian Ruth** et al.; Dyson Technology Limited, Intellectual Property Department, Tetbury Hill, Malmesbury Wiltshire SN16 0RP (GB).

(81) Designated States *(unless otherwise indicated, for every kind of national protection available)*: AE, AG, AL, AM, AT, AU, AZ, BA, BB, BG, BH, BR, BW, BY, BZ, CA, CH, CN, CO, CR, CU, CZ, DE, DK, DM, DO, DZ, EC, EE, EG, ES, FI, GB, GD, GE, GH, GM, GT, HN, HR, HU, ID, IL, IN, IS, JP, KE, KG, KM, KN, KP, KR, KZ, LA, LC, LK, LR, LS, LT, LU, LY, MA, MD, MG, MK, MN, MW, MX, MY, MZ, NA, NG, NI, NO, NZ, OM, PG, PH, PL, PT, RO, RS, RU, SC, SD, SE, SG, SK, SL, SM, SV, SY, TJ, TM, TN, TR, TT, TZ, UA, UG, US, UZ, VC, VN, ZA, ZM, ZW.

(84) Designated States *(unless otherwise indicated, for every kind of regional protection available)*: ARIPO (BW, GH, GM, KE, LS, MW, MZ, NA, SD, SL, SZ, TZ, UG, ZM, ZW), Eurasian (AM, AZ, BY, KG, KZ, MD, RU, TJ, TM), European (AT, BE, BG, CH, CY, CZ, DE, DK, EE, ES, FI, FR, GB, GR, HU, IE, IS, IT, LT, LU, LV, MC, MT, NL, PL, PT, RO, SE, SI, SK, TR), OAPI (BF, BJ, CF, CG, CI, CM, GA, GN, GQ, GW, ML, MR, NE, SN, TD, TG).

Published:
— *with international search report*

For two-letter codes and other abbreviations, refer to the "Guidance Notes on Codes and Abbreviations" appearing at the beginning of each regular issue of the PCT Gazette.

(54) Title: A HAND-HELD CLEANING APPLIANCE

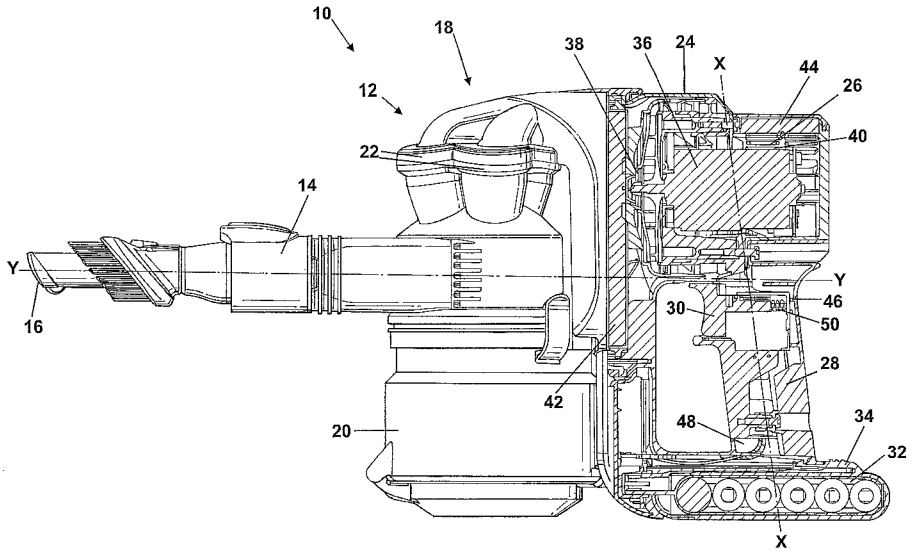

(57) Abstract: The invention provides a hand-held cleaning appliance (10) comprising a suction conduit (14) having a longitudinal axis (Y-Y), an airflow generator (36) for generating an airflow along the suction conduit (14), separating apparatus (18) arranged in communication with the suction conduit (14) for separating dirt and dust from the airflow, a power source (32) for supplying power to the airflow generator (36) and an elongate handle (28) disposed between the airflow generator (36) and the power source (32). The elongate handle (28) is dimensioned and arranged to be gripped by a user's hand and the elongate handle (28) lies transverse to the longitudinal axis (Y-Y) of the suction conduit. By providing a hand-held vacuum cleaner (10) with such an arrangement, the hand-held vacuum cleaner (10) is easier and more comfortable to manipulate in use.

WO 2008/009888 A1

SharkNinja Ex. 1007
SharkNinja et al. v. Dyson Technology Limited,
IPR2023-01322
Page 1 of 16

A Cleaning Appliance

The invention relates to a hand-held cleaning appliance. More particularly, the invention relates to a hand-held vacuum cleaner.

Hand-held vacuum cleaners are known from, for example, GB 1 207 278. This document discloses a hand-held vacuum cleaner having an elongate main body with an air inlet, a suction conduit and a dust bag for separating dirt and dust from an airflow. A motor and fan assembly is provided in the main body together with a power source. A handgrip is located on the upper part of the hand-held vacuum cleaner. The handgrip extends parallel to the elongate main body at a shallow angle to the suction conduit, and both the airflow generator and the power source are located in the main body underneath the handgrip. JP 2004-041760 discloses a hand-held vacuum cleaner having a similar handgrip arrangement. However, in this case, the motor and fan assembly and the power source of the hand-held vacuum cleaner are arranged so that the centre of gravity of the machine is located at the centre of the handgrip.

An alternative arrangement of handgrip is shown in US 1,871,624. This document discloses a hand-held vacuum cleaner having a cylindrical main body and a handgrip arranged at one end. A curved suction conduit is located at an end opposite to the handgrip. The handgrip is arranged transversely to the longitudinal axis of the cylindrical main body and approximately parallel to the suction conduit. This arrangement may give the user a stronger wrist position in use than the handgrip arrangements disclosed in GB 1 207 278 and JP 2004-041760. However, the heavy components of the vacuum cleaner (for example, the motor and fan assembly) are located forwardly of the handgrip relative to a user's hand when the vacuum cleaner is in use. Therefore, the centre of mass of the respective hand-held vacuum cleaner will be located forwardly of the handgrip. This may result in the hand-held vacuum cleaner described above being tiring and uncomfortable to use because the user will have to

exert additional effort in order to maintain the hand-held vacuum cleaner in a fixed orientation.

It is an object of the present invention to provide a hand-held vacuum cleaner which is easier to manipulate in use than known arrangements. It is a further object of the present invention to provide a hand-held vacuum cleaner in which the arrangement of the handgrip, the motor and fan assembly and the power source allow the hand-held vacuum cleaner to be manipulated easily and comfortably.

The invention provides a hand-held cleaning appliance comprising a suction conduit having a longitudinal axis, an airflow generator for generating an airflow along the suction conduit, separating apparatus arranged in communication with the suction conduit for separating dirt and dust from the airflow, a power source for supplying power to the airflow generator and an elongate handle disposed between the airflow generator and the power source and dimensioned and arranged to be gripped by a user's hand, wherein the elongate handle lies transverse to the longitudinal axis of the suction conduit. By providing a hand-held cleaning appliance with such an arrangement, a user is able to maintain a comfortable wrist position and movement of the hand-held vacuum cleaner feels comfortable.

Preferably, the elongate handle lies at an angle to the longitudinal axis in the range of 80 to 90°. More preferably, the elongate handle lies at an angle to the longitudinal axis which is close to a right angle.

Preferably, the separating apparatus is located between the suction conduit and the elongate handle. This arrangement improves the weight balance of the hand-held vacuum cleaner.

Preferably, the suction conduit has a suction opening and the longitudinal axis passes through the suction opening. This arrangement feels natural for a user and is easy to use.

An embodiment of the invention will now be described with reference to the accompanying drawings, in which:

Figure 1 is an isometric view of a hand-held vacuum cleaner according to the invention;

Figure 2 is a partially cut-away side view of the hand-held vacuum cleaner of Figure 1; and

Figure 3 is a plan view of the hand-held vacuum cleaner of Figure 1.

Figure 1 shows a hand-held vacuum cleaner 10. The hand-held vacuum cleaner 10 comprises a main body 12. The main body 12 includes a suction conduit 14 having a suction opening 16. The main body 12 also includes cyclonic separating apparatus 18 for separating dirt and dust from an airflow drawn in through the suction opening 16. The cyclonic separating apparatus 18 is in communication with the suction conduit 14 and the suction opening 16. The cyclonic separating apparatus 18 comprises an upstream cyclone 20 and a plurality of downstream cyclones 22 but further detail is not material to the invention and therefore will not be described.

The main body 12 further includes a motor housing 24 having a plurality of exhaust vents 26 formed therein. A flowpath extends from the suction opening 16, through the suction conduit 14, the cyclonic separating apparatus 18 and the motor housing 24 to the exhaust vents 26. A handgrip 28 is located below the motor housing 24 for manipulating the hand-held vacuum cleaner 10 when in use. The handgrip 28 is arranged so that the cyclonic separating apparatus 18 is located between the handgrip 28 and the suction opening 16. The handgrip 28 includes a trigger switch 30 which is positioned on the side of the handgrip 28 closest to the suction opening 16 such that the trigger switch 30 can be manipulated by a user's index finger. A power source 32 is connected to the handgrip 28 through a mounting portion 34.

Figure 2 shows the hand-held vacuum cleaner 10 in more detail. An airflow generator 36 is located in the motor housing 24. In this embodiment, the airflow generator 36 takes the form of a motor and fan assembly. The airflow generator 36 has an inlet 38 and an outlet 40. A pre-motor filter 42 is located upstream of the inlet 38 for filtering fine particulates from the airflow. A post-motor filter 44 is located downstream of the outlet 40. The pre-motor filter 42 and the post-motor filter 44 are located in the flowpath.

The handgrip 28 takes the form of an elongate handle and has a first end 46, a second end 48 and an axis X-X. The first end 46 of the handgrip 28 is connected to the motor housing 24. The airflow generator 36 is located adjacent the first end 46 of the handgrip 28. In this embodiment, the handgrip 28 and the airflow generator 36 are arranged such that the axis X-X of the handgrip 28 passes through at least a part of the airflow generator 36.

The mounting portion 34 removably receives the power source 32. When fitted to the hand-held vacuum cleaner 10, the power source 32 is located directly adjacent the second end 48 of the handgrip 28. In this embodiment, the power source 32 and the handgrip 28 are arranged so that the axis X-X passes through at least a part of the power source 32.

In other words, the handgrip 28 is arranged to lie between the airflow generator 36 and the power source 32. In this embodiment, the axis X-X passes through at least a part of each of the airflow generator 36 and the power source 32. Further, the axis X-X of the handgrip 28 lies transverse to a longitudinal axis Y-Y of the suction conduit 12. The longitudinal axis Y-Y passes through the suction opening 16. In this embodiment, the axis X-X is arranged at an angle to the longitudinal axis Y-Y which is close to 90°. This arrangement feels comfortable for a user.

The trigger switch 30 is located towards the first end 46 of the handgrip 28. The trigger switch 30 is located between the power source 32 and the airflow generator 36 and is

capable of switching the airflow generator 36 on or off. The trigger switch has on and off positions. The trigger switch moves from left to right as seen in Figure 2. The off position is located to the left, and the on position to the right. In the off position the trigger switch 30 is in an open state and the airflow generator 36 will be switched off. In the on position the trigger switch 30 will be closed and the airflow generator 36 will be switched on. The trigger switch 30 includes a spring 50 which biases the trigger switch 30 towards a normally open state. This arrangement allows the trigger switch 30 to be operated easily by a user's index finger. This in turn allows the hand-held vacuum cleaner 10 to be operated with one hand.

In use, a user grips the handgrip 28 to manipulate the hand-held vacuum cleaner 10 in use. When the user squeezes the trigger switch 30, the airflow generator 36 operates. The user must maintain pressure on the trigger switch 30 in order to keep the airflow generator 36 operating. This means that the user is likely to release the trigger switch 30 when he or she does not require a cleaning action, e.g. when moving from one room to another. If the user releases the trigger switch 30, the spring 50 will bias the trigger switch 30 to the off position and operation of the airflow generator 36 will cease. This reduces unnecessary use of the airflow generator 36 and results in a saving of battery life and motor life.

When operating, the airflow generator 36 draws a flow of dirt- and dust-laden air into the suction opening 16, through the suction conduit 14 and into the cyclonic separating apparatus 18. Dirt- and dust-laden air enters the upstream cyclone 20 and larger dirt and dust particles are separated by cyclonic motion. These particles are then collected in the upstream cyclone 20.

The partially-cleaned airflow then enters the plurality of downstream cyclones 22. The downstream cyclones 22 are able to separate smaller particles of dirt and dust from the partially-cleaned airflow than the upstream cyclone 20. The cleaned air exits the cyclonic separating apparatus 16 and passes sequentially through the pre-motor filter 42,

the airflow generator 36 and the post-motor filter 44 before being exhausted from the hand-held vacuum cleaner 10 through the exhaust vents 26.

In use, a user may wish to clean a variety of surfaces which may be orientated at different angles. Therefore, a user will need to lift and move the hand-held vacuum cleaner 10 into a variety of positions and orientations in order to clean effectively. The location of the handgrip 28 between the airflow generator 36 and the power source 32 allows the hand-held vacuum cleaner 10 to be manipulated easily in use. This is because the user's hand will be located between the two heaviest components of the hand-held vacuum cleaner 10. This results in a "dumbbell-like" configuration in which the weight of the hand-held vacuum cleaner 10 is distributed on both sides of the user's hand.

The transverse arrangement of the longitudinal axis Y-Y of the suction conduit 14 with respect to the axis X-X of the handgrip 28 results in the suction conduit 12 forming a substantially straight extension of the user's forearm when the user's wrist is essentially straight. This arrangement feels comfortable for the user, especially when the hand held vacuum cleaner 10 is used for a period of time. Further, the location of the longitudinal axis Y-Y of the suction conduit 14 close to the centre of the hand-held vacuum cleaner 10 means that the longitudinal axis Y-Y of the suction conduit 14 will be coincident, or close to, the longitudinal axis of rotation of the user's forearm. This results in little or no axial displacement of the suction opening 14 when the hand-held vacuum cleaner 10 is rotated.

The invention is not limited to the features of the specific embodiment described above. Variations will be apparent to the person skilled in the art. For example, the specific locations of the airflow generator or power source may be varied. The airflow generator may lie directly adjacent the first end of the handgrip. The airflow generator may lie above or below the handgrip. Additionally, the power source may lie directly adjacent the second end of the handgrip. The power source may lie above or below the handgrip. What is important is that the airflow generator lies adjacent a first end of the handgrip and the power source lies adjacent a second end of the handgrip.

The angular relationship between the longitudinal axis of the suction conduit and the axis of the handgrip can be varied. It is preferred that the angle between the longitudinal axis of the suction conduit and the axis of the handgrip is in the range of 80 to 90°. However, what is important is that these axes are transverse to one another such that the manipulation of the hand-held vacuum cleaner by a user feels comfortable.

A cyclonic separating unit need not be used. Other separating apparatus such as a bag-type filter could be used. Further, the hand-held vacuum cleaner need not be fitted with a rechargeable power source. Standard batteries or a power lead could be used. Further, the invention is not limited to hand-held vacuum cleaners. Other types of hand-held cleaning appliances could be used, for example, carpet shampooers, wet and dry machines or blower vacuum devices.

CLAIMS

1. A hand-held cleaning appliance comprising a suction conduit having a longitudinal axis, an airflow generator for generating an airflow along the suction conduit, separating apparatus arranged in communication with the suction conduit for separating dirt and dust from the airflow, a power source for supplying power to the airflow generator and an elongate handle disposed between the airflow generator and the power source and dimensioned and arranged to be gripped by a user's hand, wherein the elongate handle lies transverse to the longitudinal axis of the suction conduit.

2. A hand-held cleaning appliance according to claim 1, wherein the elongate handle lies at an angle to the longitudinal axis in the range of 80 to 90°.

3. A hand-held cleaning appliance according to claim 1 or 2, wherein the elongate handle lies at an angle to the longitudinal axis which is close to a right angle.

4. A hand-held cleaning appliance according to claim any one of claims 1 to 3, wherein the separating apparatus is located between the suction conduit and the elongate handle.

5. A hand-held cleaning appliance according to any one of the preceding claims, wherein the suction conduit has a suction opening and the longitudinal axis passes through the suction opening.

6. A hand-held cleaning appliance according to claim 5, wherein the suction opening is remote from the elongate handle.

7. A hand-held cleaning appliance according to any one of the preceding claims, wherein a trigger switch is located on the elongate handle for switching the airflow generator on or off.

8. A hand-held cleaning appliance according to claim 6 and 7, wherein the trigger switch is located on the side of the elongate handle which is closest to the suction opening.

9. A hand-held cleaning appliance according to claim 7 and 8, wherein the trigger switch includes resilient means for biasing the trigger switch into an off position.

10. A hand-held cleaning appliance according to any one of the preceding claims, wherein the separating apparatus comprises a cyclonic separator.

11. A hand-held cleaning appliance according to any one of the preceding claims, wherein the hand-held cleaning appliance is a hand-held vacuum cleaner.

12. A hand-held cleaning appliance substantially as hereinbefore described with reference to the accompanying drawings.

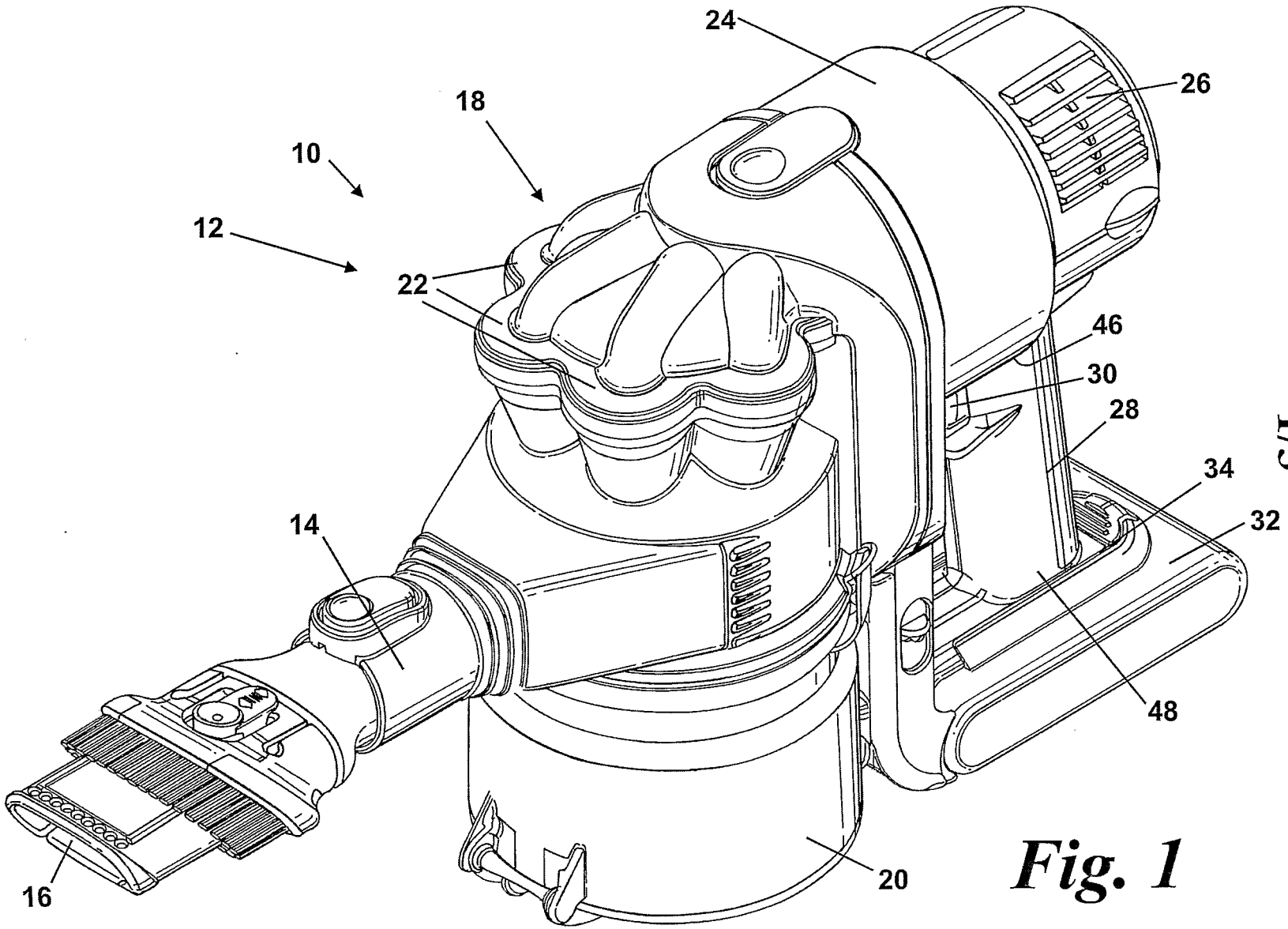

Fig. 1

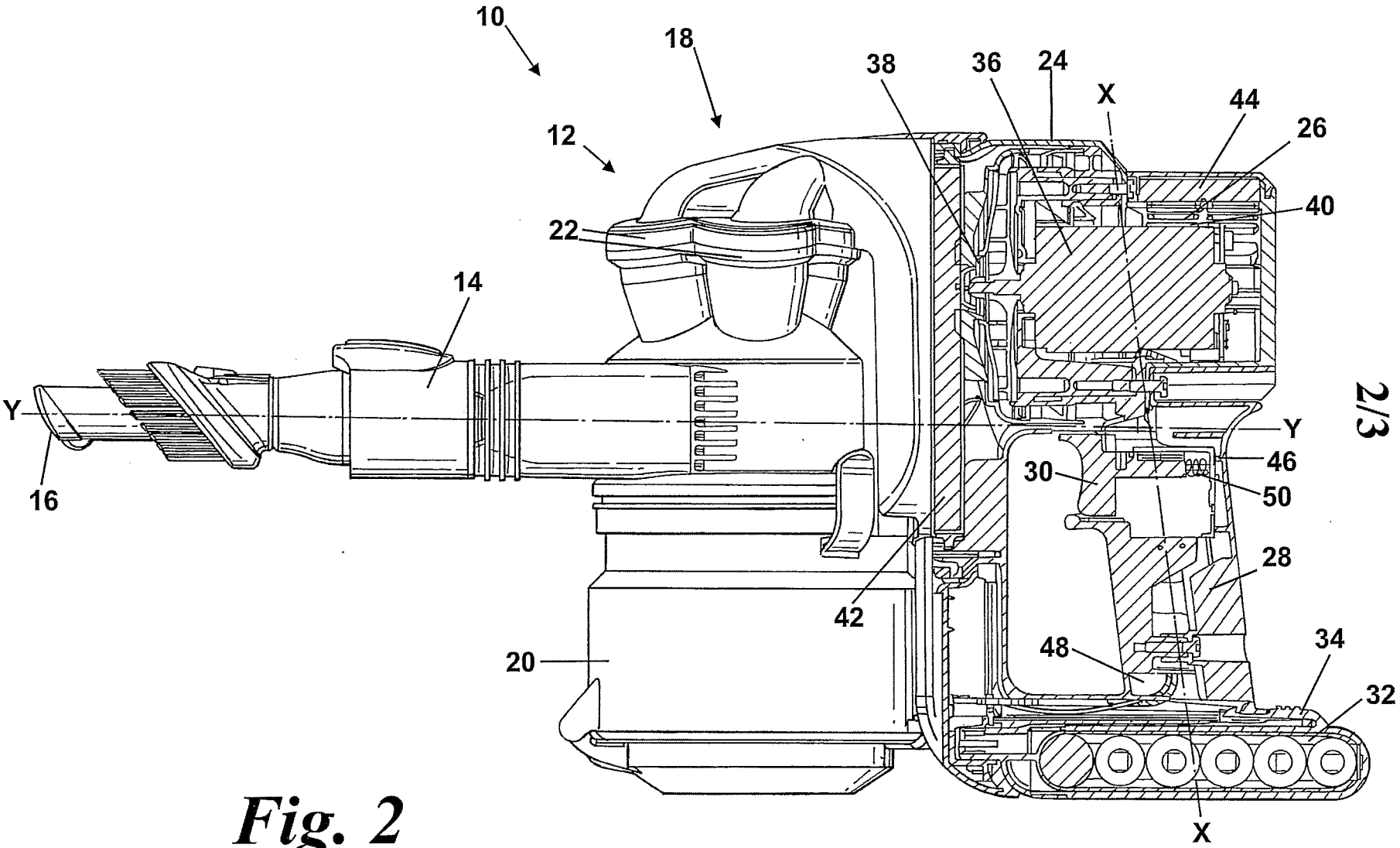

Fig. 2

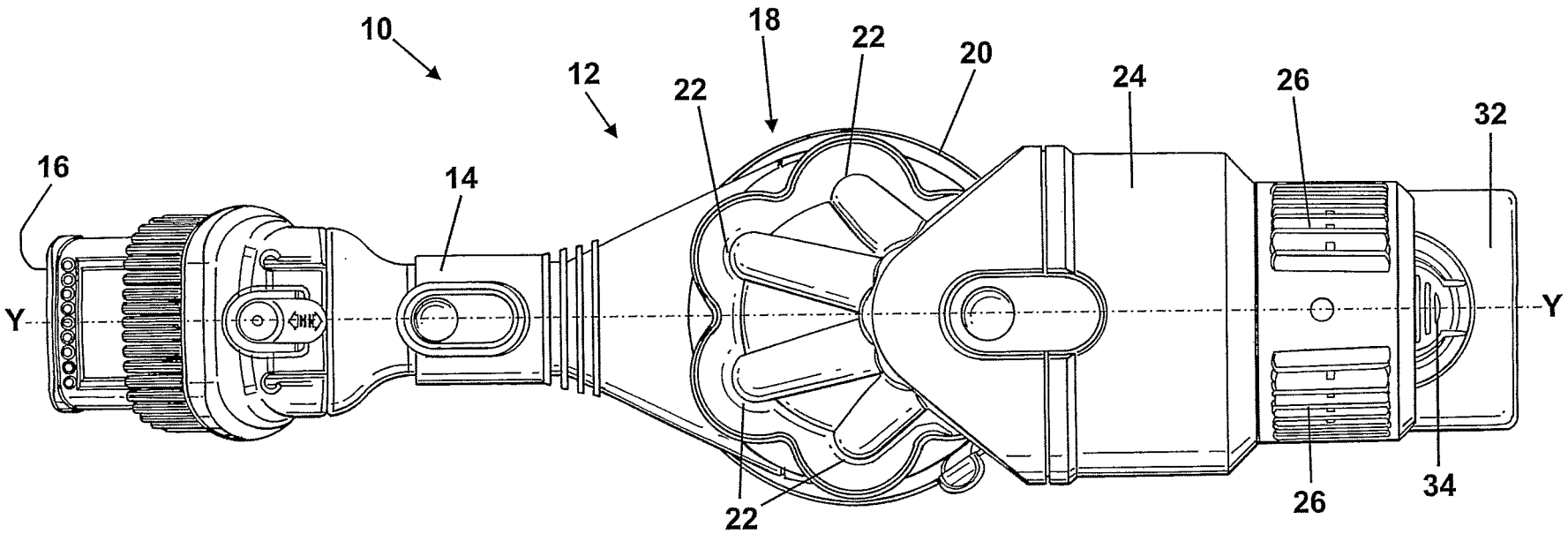

Fig. 3

SharkNinja Ex. 1007
SharkNinja et al. v. Dyson Technology Limited,
IPR2023-01322
Page 13 of 16

INTERNATIONAL SEARCH REPORT

International application No
PCT/GB2007/002536

A. CLASSIFICATION OF SUBJECT MATTER
INV. A47L5/24

According to International Patent Classification (IPC) or to both national classification and IPC

B. FIELDS SEARCHED

Minimum documentation searched (classification system followed by classification symbols)
A47L B60S B25F

Documentation searched other than minimum documentation to the extent that such documents are included in the fields searched

Electronic data base consulted during the international search (name of data base and, where practical, search terms used)

EPO-Internal

C. DOCUMENTS CONSIDERED TO BE RELEVANT

Category*	Citation of document, with indication, where appropriate, of the relevant passages	Relevant to claim No.
X	US 3 914 820 A (HANKEL ROBERT WILLIAM) 28 October 1975 (1975-10-28) figures 1,3,5	1-7,11, 12
Y		9

X	FR 1 508 452 A (MOBES NACHF W) 5 January 1968 (1968-01-05) the whole document	1-3,5-8, 11,12

X	JP 2004 041760 A (MATSUSHITA ELECTRIC IND CO LTD) 12 February 2004 (2004-02-12) cited in the application abstract; figure 1	1,4,11, 12
Y		10

	-/--	

[X] Further documents are listed in the continuation of Box C.

[X] See patent family annex.

* Special categories of cited documents :

"A" document defining the general state of the art which is not considered to be of particular relevance
"E" earlier document but published on or after the international filing date
"L" document which may throw doubts on priority claim(s) or which is cited to establish the publication date of another citation or other special reason (as specified)
"O" document referring to an oral disclosure, use, exhibition or other means
"P" document published prior to the international filing date but later than the priority date claimed

"T" later document published after the international filing date or priority date and not in conflict with the application but cited to understand the principle or theory underlying the invention
"X" document of particular relevance; the claimed invention cannot be considered novel or cannot be considered to involve an inventive step when the document is taken alone
"Y" document of particular relevance; the claimed invention cannot be considered to involve an inventive step when the document is combined with one or more other such documents, such combination being obvious to a person skilled in the art.
"&" document member of the same patent family

Date of the actual completion of the international search	Date of mailing of the international search report
6 September 2007	19/09/2007
Name and mailing address of the ISA/ European Patent Office, P.B. 5818 Patentlaan 2 NL – 2280 HV Rijswijk Tel. (+31-70) 340-2040, Tx. 31 651 epo nl, Fax: (+31-70) 340-3016	Authorized officer PAPADIMITRIOU, S

Form PCT/ISA/210 (second sheet) (April 2005)

SharkNinja Ex. 1007
SharkNinja et al. v. Dyson Technology Limited, IPR2023-01322
Page 14 of 16

INTERNATIONAL SEARCH REPORT

International application No
PCT/GB2007/002536

C(Continuation). DOCUMENTS CONSIDERED TO BE RELEVANT

Category*	Citation of document, with indication, where appropriate, of the relevant passages	Relevant to claim No.
Y	GB 1 207 278 A (NEMEJANSKI ARIANE SABINE [FR]) 30 September 1970 (1970-09-30) cited in the application page 1, lines 32-45 page 2, lines 63-111; figures	9
Y	US 2002/189048 A1 (MARUYAMA KANAME [JP] ET AL) 19 December 2002 (2002-12-19) paragraph [0014]	10
A	DE 202 02 595 U1 (FRITZSCHE HELMUT [DE]) 25 July 2002 (2002-07-25) figures	
A	US 5 074 006 A (EREMITA NUNZIO [US]) 24 December 1991 (1991-12-24) column 1, lines 28,29 column 1, line 58 - column 2, line 28; figures 1,2	
A	JP 50 147166 A (-) 26 November 1975 (1975-11-26) figure 2	
A	US 2004/144070 A1 (GAMMACK PETER DAVID [GB] ET AL) 29 July 2004 (2004-07-29) figures 3-5	
A	US 5 089 738 A (BERGQVIST HAKAN [SE] ET AL) 18 February 1992 (1992-02-18) abstract; figures 1,3	

Form PCT/ISA/210 (continuation of second sheet) (April 2005)

SharkNinja Ex. 1007
SharkNinja et al. v. Dyson Technology Limited,
IPR2023-01322
Page 15 of 16

INTERNATIONAL SEARCH REPORT

Information on patent family members

International application No
PCT/GB2007/002536

Patent document cited in search report		Publication date	Patent family member(s)			Publication date
US 3914820	A	28-10-1975	NONE			
FR 1508452	A	05-01-1968	NONE			
JP 2004041760	A	12-02-2004	NONE			
GB 1207278	A	30-09-1970	BE	724560	A	02-05-1969
			CH	479231	A	30-09-1969
			DE	1812748	A1	21-08-1969
			ES	160126	Y	16-05-1971
			FR	1554851	A	24-01-1969
			LU	57453	A1	21-04-1969
			NL	6817505	A	10-06-1969
US 2002189048	A1	19-12-2002	JP	3674031	B2	20-07-2005
			JP	2003000497	A	07-01-2003
DE 20202595	U1	25-07-2002	NONE			
US 5074006	A	24-12-1991	CA	2057661	A1	14-06-1993
JP 50147166	A	26-11-1975	JP	1023702	C	28-11-1980
			JP	55014649	B	17-04-1980
US 2004144070	A1	29-07-2004	NONE			
US 5089738	A	18-02-1992	DE	4100453	A1	11-07-1991
			GB	2239834	A	17-07-1991
			JP	2728315	B2	18-03-1998
			JP	4217473	A	07-08-1992
			NL	9100006	A	01-08-1991
			SE	465211	B	12-08-1991
			SE	9000080	A	11-07-1991