UNITED STATES PATENT AND TRADEMARK OFFICE

BEFORE THE PATENT TRIAL AND APPEAL BOARD

SHARKNINJA, INC.,
SHARKNINJA OPERATING LLC,
SHARKNINJA MANAGEMENT LLC, AND
SHARKNINJA SALES COMPANY,
Petitioners,

v.

DYSON TECHNOLOGY LIMITED,
Patent Owner.

Case No. IPR2023-01323

U.S. Patent No. 11,589,660

Declaration of Daniel M. Nosenchuck, Ph.D. in Support of Petition for *Inter Partes* Review of U.S. Patent No. 11,589,660

TABLE OF CONTENTS

Page

PETITIONERS' EXHIBIT LIST .....

I. QUALIFICATIONS 2

II. SCOPE OF OPINIONS 3

III. MATERIALS REVIEWED AND CONSIDERED 4

IV. LEVEL OF ORDINARY SKILL IN THE ART 4

V. STATEMENT OF LEGAL PRINCIPLES 6

A. Claim Construction 6

B. Obviousness 6

VI. TECHNOLOGY OF THE '660 PATENT 8

B. Overview of the '660 Patent 8

C. Prosecution History 14

D. Effective Filing Date 16

E. Challenged Claims 16

VII. SUMMARY OF THE INVALIDITY GROUNDS AND PRIOR ART 16

A. Invalidity Grounds 16

B. U.S. Patent No. 4,943,182 ("Hoblingre") (Exhibit 1004) 17

C. EP 0 791 758 A1 ("Mouhot") (Exhibit 1005, Exhibit 1006) 20

D. U.S. Patent Publication No. 2015/0265022 ("Maclaine") (Exhibit 1007) 22

E. U.S. Patent No. 6,161,244 ("Jeannet") (Exhibit 1008) 26

VIII. CLAIM CONSTRUCTION 27

SharkNinja Ex. 1003
SharkNinja et al. v. Dyson Technology Limited,
IPR2023-01323
Page 2 of 139

IX. APPLICATION OF THE PRIOR ART TO THE CLAIMS 28

A. Ground 1: Hoblingre Anticipates Claims 1-9, 15, 23, 24, and 32 28

1. Independent Claim 1 28

2. Dependent Claim 2.....41

3. Dependent Claim 3.....42

4. Dependent Claim 4.....43

5. Dependent Claim 5.....45

6. Dependent Claim 6.....46

7. Dependent Claim 7.....47

8. Dependent Claim 8.....48

9. Dependent Claim 9.....49

10. Dependent Claim 15 50

11. Dependent Claim 23 51

12. Dependent Claim 24 52

13. Dependent Claim 32 53

B. Ground 2: Hoblingre in View of Maclaine Renders Obvious Claims 1-9, 15, 18, 23, 24, and 30-32 54

1. Motivation to Combine Hoblingre and Maclaine 54

2. Independent Claim 1 57

3. Dependent Claim 15 58

4. Dependent Claim 18 59

5. Dependent Claim 30 62

6. Dependent Claim 31 62

SharkNinja Ex. 1003
SharkNinja et al. v. Dyson Technology Limited,
IPR2023-01323
Page 3 of 139

C. Ground 3: Hoblingre in View of Maclaine and Jeannet Renders Obvious Claims 1-9, 15, 18, 23, 24, 30-34 63

1. Motivation to Combine Hoblingre, Maclaine, and Jeannet.....63

2. Independent Claim 33 65

3. Dependent Claim 34 72

D. Ground 4: Mouhot Anticipates Claims 1-9, 15, 23, 24, and 32.....73

1. Independent Claim 1 74

2. Dependent Claim 2.....88

3. Dependent Claim 3.....90

4. Dependent Claim 4.....91

5. Dependent Claim 5.....93

6. Dependent Claim 6.....96

7. Dependent Claim 7.....97

8. Dependent Claim 8.....99

9. Dependent Claim 9.....100

10. Dependent Claim 15 102

11. Dependent Claim 23 103

12. Dependent Claim 24 104

13. Dependent Claim 32 106

E. Ground 5: Mouhot in View of Maclaine Renders Obvious Claims 1-9, 15, 18, 23, 24, and 30-32.....106

1. Motivation to Combine Mouhot and Maclaine.....107

2. Independent Claim 1 109

3. Dependent Claim 15 110

SharkNinja Ex. 1003
SharkNinja et al. v. Dyson Technology Limited,
IPR2023-01323
Page 4 of 139

4. Dependent Claim 18 112

5. Dependent Claim 30 114

6. Dependent Claim 31 115

F. Ground 6: Mouhot in View of Maclaine and Jeannet Renders Obvious Claims 33 and 34 116

1. Motivation to Combine Mouhot, Maclaine, and Jeannet 116

2. Independent Claim 33 117

3. Dependent Claim 34 124

X. SECONDARY CONSIDERATIONS OF NON-OBVIOUSNESS 125

XI. CONCLUSION.....126

SharkNinja Ex. 1003
SharkNinja et al. v. Dyson Technology Limited,
IPR2023-01323
Page 5 of 139

PETITIONERS' EXHIBIT LIST

Exhibit	Description
1001	U.S. Patent No. 11,589,660
1002	File History for U.S. Patent No. 11,589,660
1003	Declaration of Dr. Nosenchuck
1004	U.S. Patent No. 4,943,182 ("Hoblingre")
1005	Certified Translation of European Patent Application No. EP0791758 ("Mouhot")
1006	European Patent Application No. EP0791758 ("Mouhot")
1007	U.S. Patent Application Publication No. 2015/0265022 ("Maclaine")
1008	U.S. Patent No. 6,161,244 ("Jeannet")
1009	U.S. Patent No. 5,715,847 ("Rolf")
1010	U.S. Patent No. 7,876,373 ("Ochi")

I, Daniel Mark Nosenchuck, declare as follows:

1. I have been retained by counsel for SharkNinja Inc., SharkNinja Operating LLC, SharkNinja Management LLC, and SharkNinja Sales Company ("Petitioners") to submit a Declaration in support of the Petition for Inter Partes Review of U.S. Patent No. 11,589,660 ("the Petition"), which I understand has been assigned to Dyson Technology Limited. ("Dyson" or "Patent Owner").

2. I have been asked to opine on whether the '660 patent is rendered obvious by the prior art. My opinions are based on my experience, knowledge, and skill in fluid mechanics and heat transfer, as well as in product development including the design and manufacture of personal care appliances, including hair dryers. In preparation for this declaration, I have reviewed the '660 patent, its prosecution history, and all exhibits cited in this Declaration and in the Petition.

3. I may rely upon these materials, my experience and knowledge, and/or additional materials to rebut arguments raised by the Patent Owner. Further, I may also consider additional documents and information in forming any necessary opinions, including documents that may not yet have been provided to me.

4. My analysis of the materials produced in this investigation is ongoing and I will continue to review any new material as it is provided. This Declaration represents only those opinions I have formed to date. I reserve the right to revise,

supplement, and/or amend my opinions stated herein based on new information and on my continuing analysis of the materials already provided.

5. I am being paid at my normal hourly rate for my work on this matter. I have no personal or financial stake or interest in the outcome of the Petition.

I. QUALIFICATIONS

6. I received a B.S. degree in Aerospace Engineering and Mechanical Engineering from Syracuse University, and M.S. and Ph.D. degrees in Aeronautics from the California Institute of Technology.

7. In August, 1983, I joined the faculty of Princeton University as an Assistant Professor, where I became Associate Professor of Mechanical and Aerospace Engineering in 1988. I have taught classes in Thermodynamics and Heat Transfer, Fluid Dynamics, Viscous Flows, Energy Conversion and the Environment, Applications to Transportation, Mechanical Design, and Entrepreneurial Engineering (Product Design and Marketing). My curriculum vitae is submitted herewith as Appendix A.

8. I have conducted extensive research in fluid mechanics and heat transfer, including use of turbo-machines. My research has further included flow control, drag reduction and development of a special-purpose architecture computer for complex flow simulations (Navier-Stokes Computer). I have worked in Hollywood as a consultant on special-effects related to hydrodynamics and

ballistics, and in 1984 I received an Academy of Television Arts and Sciences Primetime Emmy Award for Outstanding Individual Achievement in Special Visual Effects, for the ABC television movie, "The Day After."

9. I have 10-15 years of experience in product development including the design and manufacture of personal care appliances, including curling irons, curlers, make-up mirrors and hair dryers. I am the named inventor on 12 issued patents, including D398,074 "Hair Dryer," U.S. Patent No. 5,841,943 "Ducted flow hair dryer with multiple impellers," and U.S. Patent No. 6,011,903 "Reduced-noise ducted flow hair dryer with multiple impellers and ambient air inlets." This work was commercialized and extensively marketed by Revlon as the "Get Quiet" hair dryer.

10. In addition, in 2015 I was retained as an expert for TF3 Limited in the matter of the inter partes review of U.S. Patent No. 8,651,118, IPR2015-00649.

11. If asked, I will testify regarding my qualifications, background, and experience in the field of personal care appliances.

II. SCOPE OF OPINIONS

12. I have been asked to provide my opinions regarding whether the Challenged Claims of the '660 patent would have been obvious to one of ordinary skill in the art at the time of the alleged invention in view of Hoblingre (Ex. 1004) (Ground 1), the combination of Hoblingre and Maclaine (Ex. 1007) (Ground 2), the

combination of Hoblingre, Maclaine, and Jeannet (Ex. 1008) (Ground 3), Mouhot (Ex. 1005) (Ground 4), the combination of Mouhot and Maclaine (Ground 5), the combination of Mouhot, Maclaine, and Jeannet (Ground 6)

13. This Declaration, including the exhibits cited herein, sets forth my opinions on these topics. It is my opinion that the Challenged Claims of the ’660 patent would have been obvious based on the combination listed above.

III. MATERIALS REVIEWED AND CONSIDERED

14. The materials I considered and relied upon in preparing my Declaration and forming my opinions include all exhibits cited in this Declaration and the Petition, including the ’660 patent, the file history of the ’660 patent, and all of the relevant prior art.

15. I also have relied on my professional experience, knowledge, and skill in fluid mechanics and heat transfer, as well as in product development including the design and manufacture of personal care appliances, including hair dryers in reaching the opinions expressed in this Declaration.

IV. LEVEL OF ORDINARY SKILL IN THE ART

16. In rendering the opinions set forth in this Declaration, I was asked to consider the patent claims and the prior art through the eyes of one of ordinary skill in the art at the effective filing date of the claimed invention. The ’660 patent relates to the field of attachment mechanisms for appliances. Ex. 1001, Abstract.

17. I understand that various factors, such as the education level of those working in the field, sophistication of the technology, types of problems encountered in the art, prior art solutions to those problems, and speed at which innovations are made, may help establish the level of skill in the art. In determining the level of ordinary skill in the art, I have taken into account these factors as well as my years of experience in the personal care appliance industry related to the subject matter of the ’660 patent.

18. It is my opinion that one of ordinary skill in the art would have had the equivalent of a Bachelor’s degree or technical degree in Mechanical or Aerospace Engineering or another engineering or design-related field. In addition, it is my opinion that one of ordinary skill in the art would have had the equivalent of at least one year’s worth of experience in research, design and/or development related to appliances. Additional education could substitute for experience, and vice versa. To the extent that the preamble of the independent claims of the ’660 patent are found to be limiting, in my opinion, one of ordinary skill in the art would have had at least one year’s worth of experience in research, design, and/or development related to handheld appliances (or other comparable industrial design), including hair care appliances at the time of the effective filing date of the claimed invention, September 1, 2016.

V. STATEMENT OF LEGAL PRINCIPLES

A. Claim Construction

19. I understand that terms appearing in the patent claims are to be interpreted according to their "ordinary and customary meaning" in an IPR proceeding. In determining the ordinary and customary meaning, the words of a claim are first given their plain meaning as they would have been understood by one of skill in the art at the time of the effective filing date of the claimed invention, in light of the specification and file history. I understand that, under limited circumstances, evidence external to the patent and its prosecution may be used to determine the meaning attributed by one of skill in the art at the time of the effective filing date of the claimed invention. I have followed this approach in my analysis, and have applied the ordinary and customary meaning of the terms of the Challenged Claims throughout my analysis in this Declaration.

20. I understand that the words of the claims should be interpreted as they would have been understood by a person of ordinary skill in the art at the time of the effective filing date of the claimed invention. For purposes of my analysis, and for the reasons explained below, I have applied a date of September 1, 2016, as the effective filing date of the claimed invention in my analysis.

B. Obviousness

21. I have been informed that a patent claim is invalid as "obvious" under AIA 35 U.S.C. § 103 if the differences between the claimed invention and the prior

art are such that the claimed invention as a whole would have been obvious before the effective filing date of the claimed invention to a person having ordinary skill in the art to which the claimed invention pertains. I have reviewed AIA 35 U.S.C. § 103.

22. I have also been informed that the framework for determining obviousness involves considering the following factors: (i) the scope and content of the prior art; (ii) the differences between the prior art and the claimed subject matter; (iii) the level of ordinary skill in the art; and (iv) any objective evidence of non-obviousness as set forth in the case of *Graham v. John Deere Company*. I have been informed that in the case of *KSR International Company v. Teleflex*, the Supreme Court reaffirmed the framework for determining obviousness that was previously set forth in the case of *Graham v. John Deere Company*.

23. I have further been informed that the "objective" (or "secondary") evidence of non-obviousness includes things such as: (1) a long-felt but unmet need in the prior art that was satisfied by the claimed invention; (2) commercial success or the lack of commercial success of the claimed invention; (3) unexpected results achieved by the claimed invention; (4) praise of the claimed invention by others skilled in the art; (5) taking of licenses under the patent by others; (6) deliberate copying of the claimed invention; and (7) contemporaneous and independent invention by others.

VI. TECHNOLOGY OF THE ’660 PATENT

A. Conventional Attachment Mechanisms

24. By September 1, 2016, the earliest asserted priority date of the ’660 Patent, the technology relevant to the ’660 Patent was well developed. In this Section, I present an overview of relevant aspects of the technology in the ’660 Patent that would have been known and available to a person of ordinary skill in the art (“POSITA”) as of around September 2016. The prior art and other references upon which I rely was published prior to September 2016. As of at least 2016, and for decades prior, bayonet attachments have been ubiquitous in a variety of different applications—particularly in various handheld appliances—to allow, for example, for ease of attachment and removal of various attachments. For example, bayonet attachments were used in handheld appliances, such as hair dryers. U.S. Patent No. 5,715,847 to Rolf et al., filed in 1995, discloses attaching a “hair styling implement,” or attachment, to a “hair dryer” by “[u]sing a rotating motion of the hair styling implement 10 relative to the hair dryer 14” to lock “projections” on the attachment within “recesses” in the hair dryer with “a bayonet-type connection.” Ex. 1009, 4:41-48.

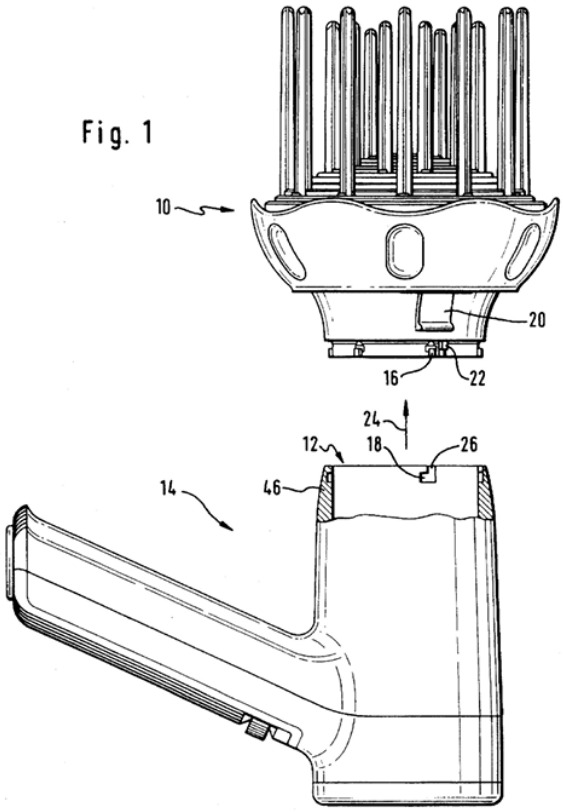

Ex. 1009, FIG. 1.

U.S. Patent No. 7,876,373 to Ochi et al., filed in 2007, discloses a camera with interchangeable lenses that includes a "lens side mount 14…coupled with the camera side mount 13 by means of a bayonet mechanism" where "the lens unit 12 is interchangeably attached to the camera body 11." Ex. 1010, 5:1-10.

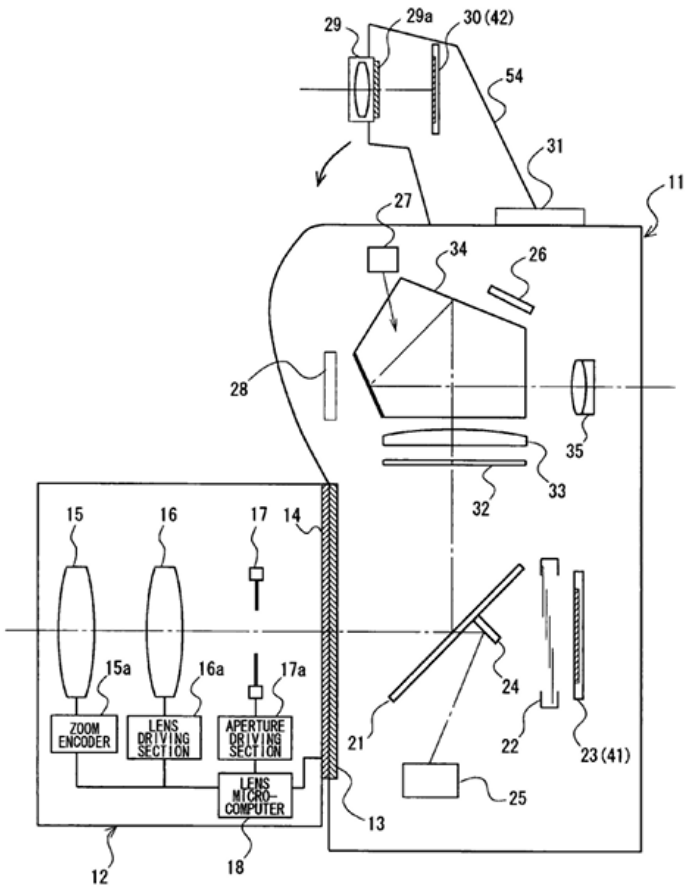

FIG.13

Ex. 1010, FIG. 13.

B. Overview of the ’660 Patent

25. The ’660 Patent claims only a single improvement and provides a brief disclosure. The ’660 patent relates to the connection mechanism between a handheld appliance, specifically a hair care appliance such as “a hot styling device,” and an attachment. Ex. 1001, 1:11-13. The problem the ’660 Patent purports to solve is providing “a solid connection between the attachment and the appliance for when hair is under tension with an easily removable attachment when required,” Ex. 1001,

1:29-32, by implementing "a curved slot," which the '660 patent describes as being "advantageous over a traditional bayonet fitting." Ex. 1001, 7:18-37. An example attachment mechanism is illustrated below:

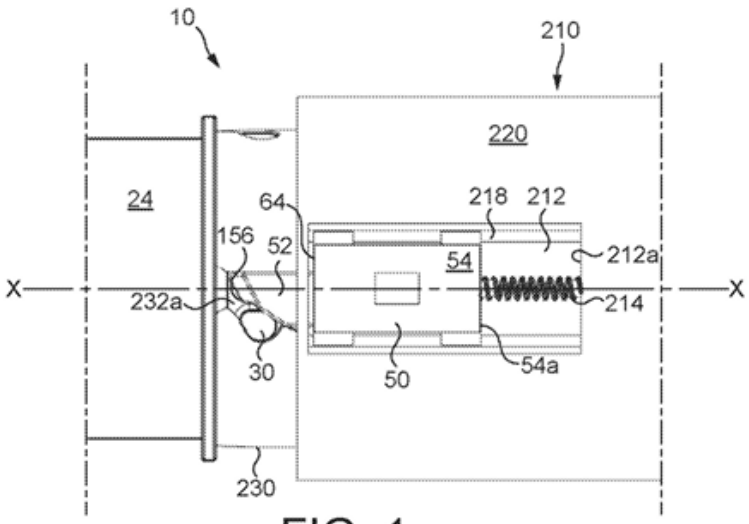

FIG. 1a

Ex. 1001, FIG. 1a.

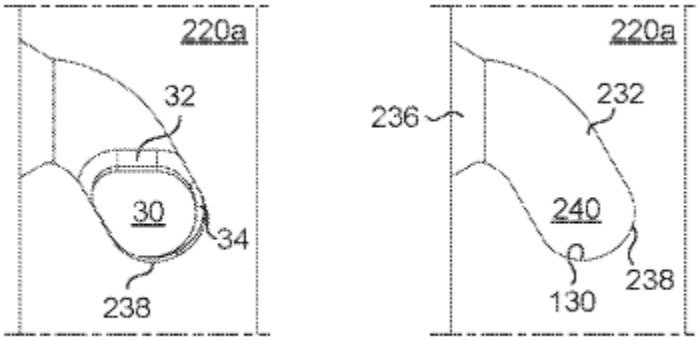

FIG. 6a FIG. 6b

Ex. 1001, FIGS. 6a, 6b.

26. Claim 1 is representative of the claimed subject matter:

> 1. A handheld appliance having a body and an attachment, the body comprising an attachment mechanism having a first slot and an actuator, the attachment comprising a first protrusion configured to engage with the first slot, wherein the actuator has a first position and a second position and the actuator is slidably moved from the first position towards the second position in a longitudinal direction of the body as the first protrusion engages with the first slot; wherein the body extends along a longitudinal axis and the first slot extends both radially around and axially along the body.

Ex. 1001, cl. 1.

27. The only advance that the ’660 patent alleges to provide is to the attachment mechanism. Ex. 1001, 1:36-39. The sole alleged improvement, “a curved slot” which is “advantageous over a traditional bayonet fitting,” is not described in detail in the ’660 patent. Ex. 1001, 7:18-37. For example, depending on the materials used in the body and the attachment, there would be a minimum geometrical slope of the slot at which, and beyond, binding of the protrusion in the slot would occur, and prevent further insertion. The curved slot allows the connection to be made by “push[ing] the attachment 20 onto the body 210 a relatively short amount” after which point “the actuator 50 completes the movement.” Ex. 1001, 7:18-37.

28. This single alleged advance, however, was not new at the time of filing. Bayonet-type couplings were “well known and employed in many fields,” and had

been in use and patented for decades prior to the earliest possible priority date of the ’660 patent. Ex. 1004, 1:13-14. For example, U.S. Patent No. 4,943,182 (“Hoblingre”) (Ex. 1004) issued in 1990 and expressly discloses an improved bayonet fastener having curved slots in a manner indistinguishable from the ’660 patent. Hoblingre’s fastener allows a connection to be made through “a simple axial force, the angular displacement occurring automatically under the effect of the exerted pressure” due to the shape of its helical slot. Ex. 1004, 2:58-3:36. Hoblingre’s mechanism is easy to use, “does not require any precise handling,” is “extremely reliable and safe,” and is “very easily dismantled.” Ex. 1004, 3:14-40. The allegedly novel attachment mechanism is also disclosed in European Patent Application No. EP0791758 (“Mouhot”) (Ex. 1005), published in 1997. Furthermore, the use of bayonet couplings in various handheld appliances was disclosed in U.S. Patent Application Publication No. 2015/0265022 (“Maclaine”) (Ex. 1007) and U.S. Patent No. 6,161,244 (“Jeannet”) (Ex. 1008).

29. As explained in detail below, each of the Challenged Claims of the ’660 patent is anticipated by Hoblingre or Mouhot and/or rendered obvious by Hoblingre or Mouhot in view of Maclaine and Jeannet. The Board should institute inter partes review to invalidate the Challenged Claims of this patent, which never should have issued.

30. As explained in detail below, the sole alleged improvement claimed in the ’660 Patent—a bayonet fastener having curved slots—was well-known and explicitly disclosed decades prior to the earliest possible priority date of the ’660 Patent by at least Hoblingre or Mouhot and/or rendered obvious by Hoblingre or Mouhot in view of Maclaine and Jeannet.

Ex. 1001, cl. 1.

C. Prosecution History

31. Below is my understanding of the relevant prosecution history of the ’660 Patent.

32. The application that issued as the ’660 Patent—Application No. 15/689,705 (“the ’705 application”)—was filed August 27, 2017 and purports to claim priority from to GB Application No. 1614825 filed on September 1, 2016. Ex. 1002, 357. The independent claims as originally filed did not recite the sole alleged improvement—curved slots.

33. After a restriction requirement by the Examiner, the Applicant elected originally-filed claim 1 to an appliance. Ex. 1002, 221-223.

34. On September 18, 2020, the Examiner issued a 102 rejection over WO95/20339 (“Vasey”), a referenced cited by the Applicant, and indicated that claims 20-23 and 34-38 recited allowable subject matter including a chamfer feature as recited in the unelected species. Ex. 1002, 192-198.

35. On January 19, 2021 the Applicant amended independent claim 1 to recite "the actuator is moved from the first position towards the second position in a longitudinal direction of the body as the protrusion engages with the first slot" to distinguish the claims over Vasey. Ex. 1002, 186-190.

36. On April 26, 2021, the Examiner allowed claims 1-25, 32-40 and issued a 102 rejection of other claims not challenged in this proceeding. Ex. 1002, 155-158.

37. In response to amendments made to unchallenged claims, on September 29, 2021, the Examiner withdrew his indication of allowability and rejected claims 1-7, 9-23, 32-35, 39, and 40 over McCarthy U.S. Patent No. 3,280,439 ("McCarthy") and indicated that dependent claim 8, reciting "wherein the body extends along a longitudinal axis and the first slot extends both radially round and axially along the body," and dependent claim 24, reciting a "user operated button which engages with the actuator" recited allowable subject matter. Ex. 1002, 100-107.

38. It was not until December 22, 2021, over four years after the U.S. application was filed that the Applicant amended independent claim 1 to include the allowable features of claim 8—the "the first slot extends both radially round and axially along the body." Ex. 1002, 82-89. The Applicant also amended claim 24 to be drafted in independent form.

39. On April 13, 2022, the Examiner withdrew his indication of allowability and issued a 102 rejection of claims 1-7, 9-16, 19, 23-25, and 32-40

over U.S. Patent No. 3,955,064 ("Demetrio"), a reference that the Applicant had previously cited in an earlier communication with the Office during prosecution. Ex. 1002, 64-70.

40. On July 12, 2022, the Applicant amended independent claim 1 to recite "the actuator is slidably moved from the first position towards the second position in a longitudinal direction of the body as the protrusion engages with the first slot" to distinguish the claims from Demetrio. Ex. 1002, 43-56.

41. In response, on October 14, 2022, the Examiner issued a notice of allowance, Ex. 1002, 29-33, and the '660 Patent issued on February 28, 2023.

D. Effective Filing Date

42. For purposes of my analysis I have assumed that the effective filing date of the '660 patent is September 1, 2016, which is the filing date of GB Application No. 1614825, the foreign priority application.

E. Challenged Claims

43. I understand that Petitioners are challenging the validity of claims 1-9, 15, 18, 23, 24, and 30-34 of the '660 Patent in the Petition for *Inter Partes* Review to which this Declaration will be attached.

VII. SUMMARY OF THE INVALIDITY GROUNDS AND PRIOR ART

A. Invalidity Grounds

44. Based on my review and analysis of the materials cited herein, my opinions regarding the understanding of one of ordinary skill in the art in the 2016

timeframe, and my training and experience, it is my opinion that the challenged claims of the ’660 Patent are invalid based on at least the following grounds:

Grounds	Claims	Statutory Basis	Prior Art
1	1-9, 15, 23, 24, 32	35 U.S.C. § 102	Hoblingre
2	1-9, 15, 18, 23, 24, 30-32	35 U.S.C. § 103	Hoblingre and Maclaine
3	1-9, 15, 18, 23, 24, 30-34	35 U.S.C. § 103	Hoblingre, Maclaine, and Jeannet
4	1-9, 15, 23, 24, 32	35 U.S.C. § 102	Mouhot
5	1-9, 15, 18, 23, 24, 30-32	35 U.S.C. § 103	Mouhot and Maclaine
6	1-9, 15, 18, 23, 24, 30-34	35 U.S.C. § 103	Mouhot, Maclaine, and Jeannet

B. U.S. Patent No. 4,943,182 (“Hoblingre”) (Exhibit 1004)

45. U.S. Patent No. 4,943,182 (“Hoblingre”), titled “Rapid fastener of the bayonet type,” issued on July 24, 1990. I understand that Hoblingre therefore qualifies as prior art to the ’660 Patent under AIA 35 U.S.C. § 102(a)(1). Hoblingre was not cited or discussed during prosecution of the ’660 Patent.

46. As explained in more detail in the specific Grounds of Invalidity analyzed below, it is my opinion that Hoblingre discloses or teaches every element of the claimed invention of the ’660 Patent as claimed in claim 1. Hoblingre discloses a “rapid fastener of the bayonet type,” Ex. 1004, Title, for connecting “in the axial

direction and in rotation of two elements." Ex. 1004, Abstract. The first element comprises a "socket" having "at least one helical slot" and an "axially slidable" ring that includes "longitudinal slot[s]" that are "laterally offset relative to the entrance" of the helical slot. Ex. 1004, Abstract. The ring is "biased by a spring" "toward the entrance of the socket." Ex. 1004, Abstract. The second element comprises a "stem" with a "driving pin" that, "in entering the helical slot, urges back the ring but is guided under the action of the spring" and the edges of the slots in the ring "toward the inner end of the helical slot" to create a secure connection. Ex. 1004, Abstract.

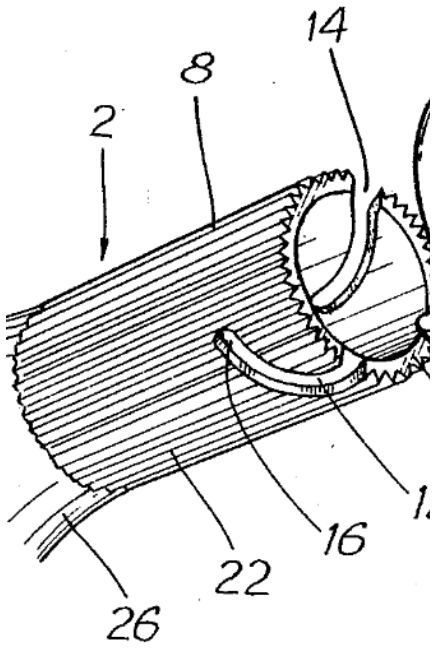

FIG. 2

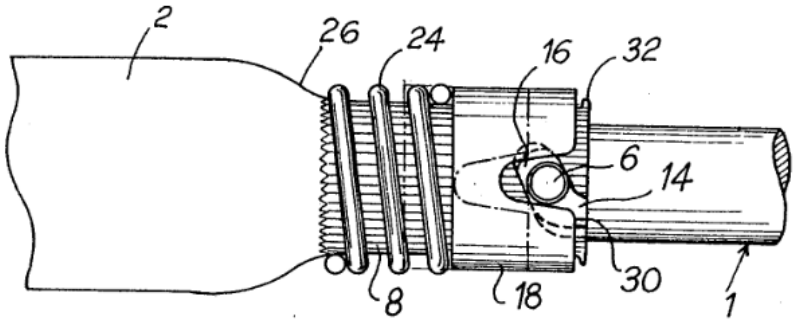

Ex. 1004, FIGS. 1 (top, excerpt), 2 (bottom).

47. Having reviewed Hoblingre in detail, it is my opinion that one of ordinary skill in the art would have been able to implement the disclosure of Hoblingre with little or no experimentation. For example, Hoblingre provides

sufficient detail regarding its fastening mechanism that one of ordinary skill in the art would have been able to construct the fastening mechanism without undue experimentation. Hoblingre is in the same field of endeavor (attachment mechanisms for appliances) as the claimed invention. As I explain below in my discussion of specific claim elements, "appliance" as used in the context of this proceeding simply indicates an apparatus. To the extent that the field of endeavor is determined to be handheld or hair care appliances, Hoblingre is reasonably pertinent to the problem faced by the inventor, which is attachment mechanisms for easy engagement and disengagement of two components.

C. EP 0 791 758 A1 ("Mouhot") (Exhibit 1005, Exhibit 1006)

48. EP 0 791 758 A1 ("Mouhot"), titled "Bayonet-type quick coupler," published on August 27, 1997. I understand that Mouhot therefore qualifies as prior art to the '660 Patent under AIA 35 U.S.C. § 102(a)(1). Mouhot was not cited or discussed during prosecution of the '660 Patent. Mouhot, as originally filed, is Exhibit 1006. I refer herein to the certified English translation of Mouhot, Exhibit 1005. Mouhot discloses a "bayonet" coupling mechanism for connecting "two members." Ex. 1005, [0001]-[0002]. This "quick coupler" mechanism improves on coupling mechanisms "known in the prior art" by disclosing a mechanism that is simple and inexpensive to produce relative to existing mechanisms. Ex. 1005, [0005]-[0006]. The mechanism comprises a "socket" having "at least one slot for

receiving a lateral protruding part of" the other member and "means for locking" to lock in position "the lateral protruding part," of the other member within in the slot to create a secure attachment. Ex. 1005, [0002]. Although Mouhot is primarily directed to a coupling mechanism used to connect two vehicle steering components, Mouhot contemplates that its mechanism can be used in "numerous applications." Ex. 1005, [0029].

49. As explained in more detail in the specific Grounds of Invalidity analyzed below, it is my opinion that Mouhot discloses or teaches every element of the claimed invention of the '660 Patent as claimed in claim 1.

50. Having reviewed Mouhot in detail, it is my opinion that one of ordinary skill in the art would have been able to implement the disclosure of Mouhot with little or no experimentation. For example, Mouhot provides sufficient detail regarding its fastening mechanism that one of ordinary skill in the art would have been able to construct the fastening mechanism without undue experimentation. Mouhot is in the same field of endeavor (attachment mechanisms for appliances) as the claimed invention. As I explain below in my discussion of specific claim elements, "appliance" as used in the context of this proceeding simply indicates an apparatus. To the extent that the field of endeavor is determined to be handheld or hair care appliances, Mouhot is reasonably pertinent to the problem faced by the

inventor, which is attachment mechanisms for easy engagement and disengagement of two components.

D. U.S. Patent Publication No. 2015/0265022 ("Maclaine") (Exhibit 1007)

51. U.S. Patent Publication No. 2015/0265022 ("Maclaine"), titled "Attachment for a hand held appliance," published on September 24, 2015. I understand that Maclaine therefore qualifies as prior art to the '660 Patent under AIA 35 U.S.C. § 102(a)(1). Maclaine was not cited or discussed during prosecution of the '660 Patent.

52. Maclaine discloses a head, or "an attachment," "for a hand held appliance, in particular a hair care appliance such as a hot styling brush." Ex. 1007, [0002]. "In use, hair is wrapped around the" attachment of the appliance "whilst air or fluid exits through" slots in the head, "drying the hair and/or styling the hair into curls or waves." Hair "wraps automatically" around the attachment of Maclaine's appliance "due to the flow of air around the surface of the" attachment. Ex. 1007, [0049]-[0050]. Maclaine discloses attachments of different shapes and sizes for creating different types of curls and waves. *See*, e.g., Ex. 1007, [0062]-[0065], [0068], [0073]-[0074], [0077]. Maclaine also discloses attachments having bristles for detangling and faster drying. Ex. 1007, [0080]-[0089]. Maclaine's attachment is secured to the body of the appliance by a "twist lock joint." Ex. 1007, [0092]. Maclaine's attachment includes "protrusions" on the "internal surface of the collar"

of the attachment that are "adapted to engage a slot" or "three separate slots" on the handle. Ex. 1007, [0092]. The slot extends at least partially around an outer surface of the inner wall "and is helical so both a rotational and longitudinal movement is required to attach or remove the head from the handle." Ex. 1007, [0092]. Maclaine explains that its "twist lock joint" is just "one example of a fixing mechanism," and that "it [would] be apparent to the skilled person that other equally acceptable alternative mechanisms could be used." Ex. 1007, [0092].

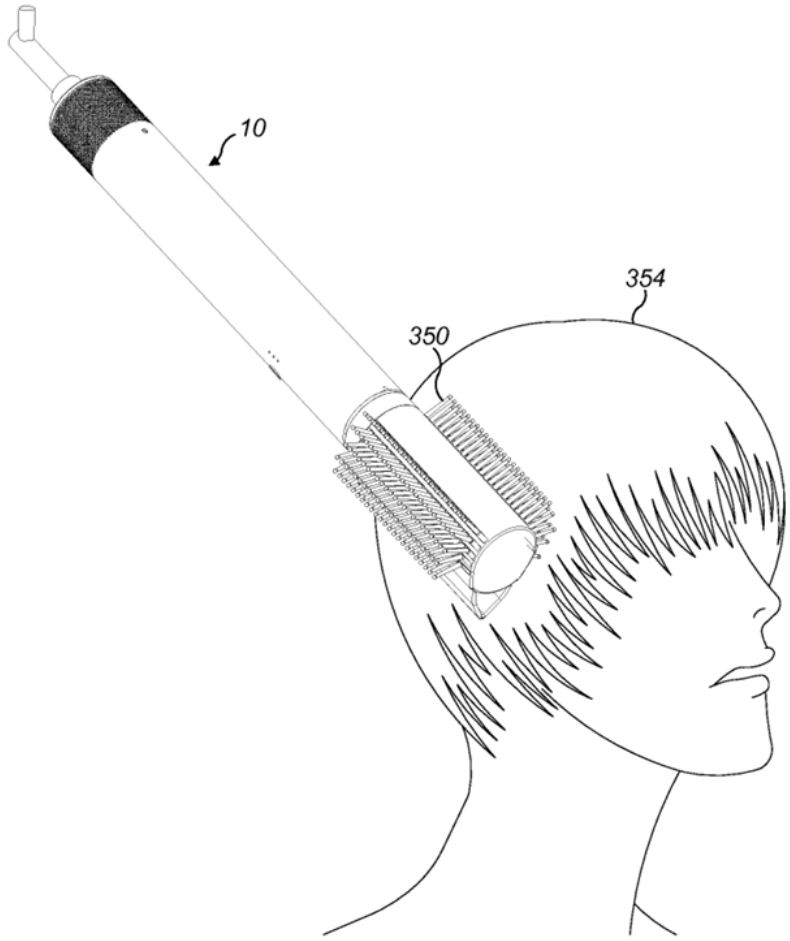

FIG. 14

Ex. 1007, FIG. 14.

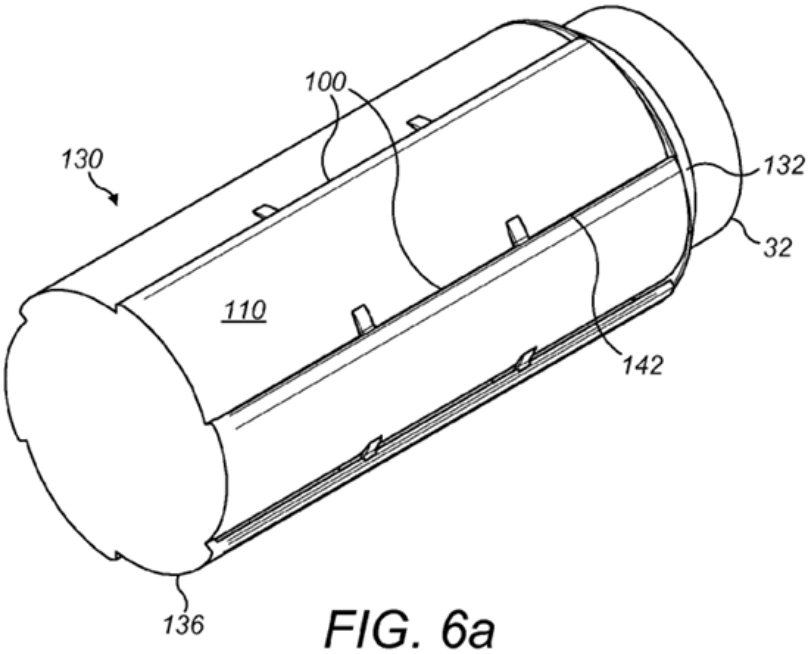

FIG. 6a

Ex. 1007, FIG.6a.

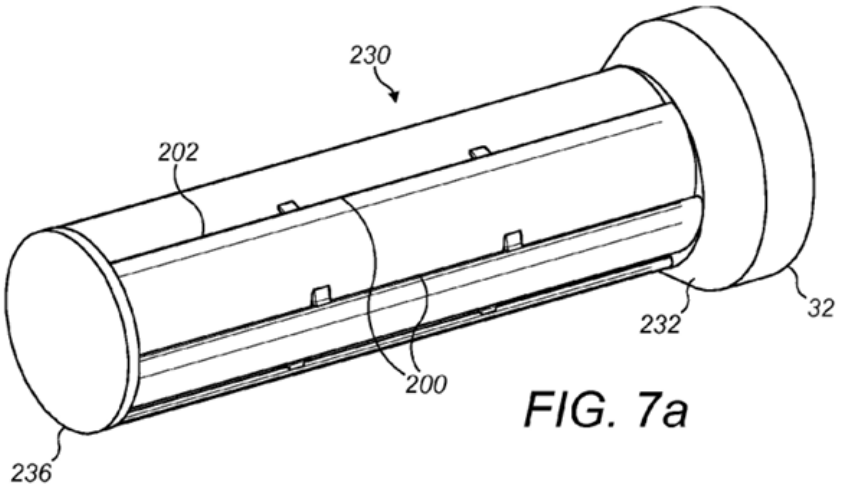

FIG. 7a

Ex. 1007, FIG. 7a.

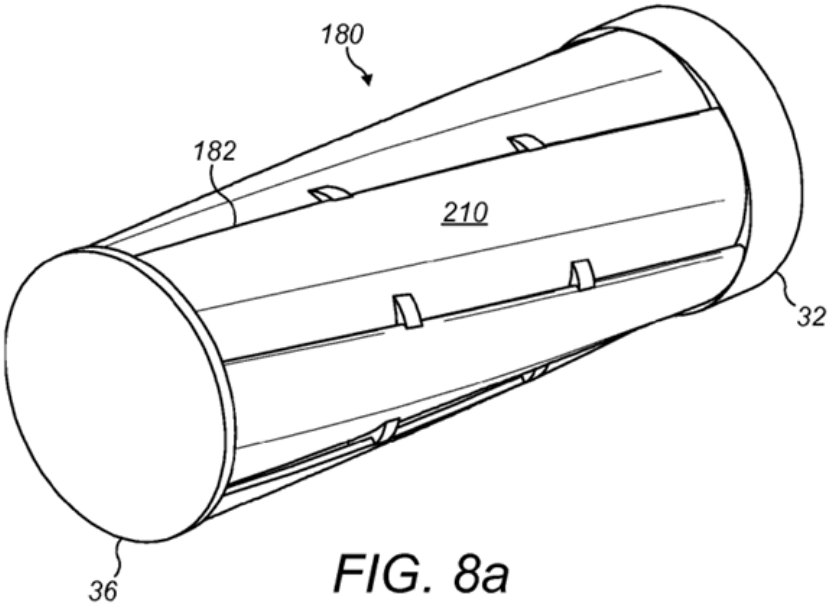

FIG. 8a

Ex. 1007, FIG. 8a.

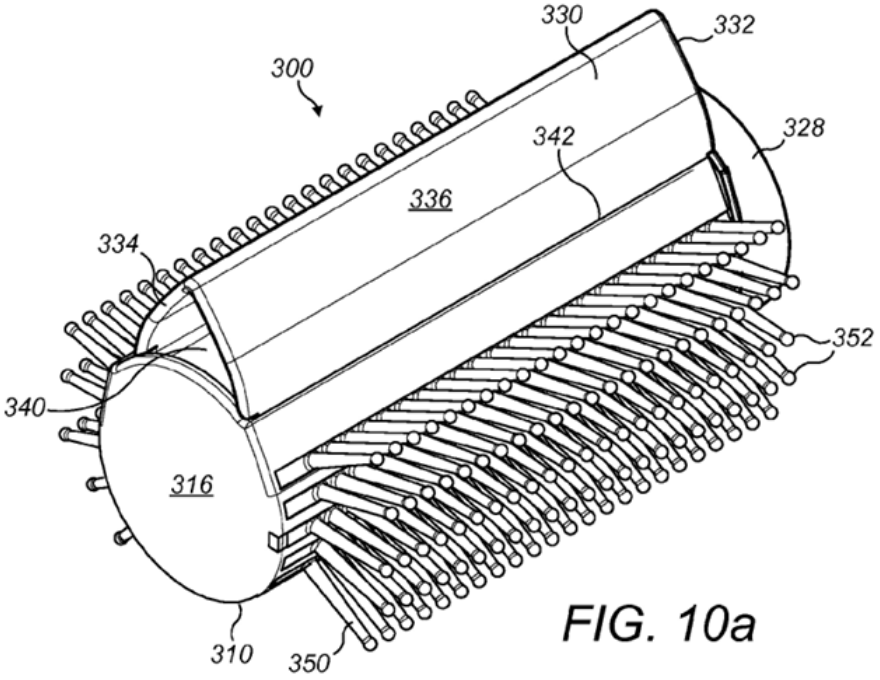

FIG. 10a

Ex. 1007, FIG. 10a.

53. Having reviewed Maclaine in detail, it is my opinion that one of ordinary skill in the art would have been able to implement the disclosure of Maclaine with little or no experimentation. For example, Maclaine provides sufficient detail regarding its handheld hair care appliance that one of ordinary skill in the art would have been able to construct the appliance without undue experimentation. Maclaine is in the same field of endeavor (attachment mechanisms for appliances) as the claimed invention, and specifically relates to handheld hair care appliances.

E. U.S. Patent No. 6,161,244 ("Jeannet") (Exhibit 1008)

54. U.S. Patent No. 6,161,244 ("Jeannet") titled "Toothbrush," issued on December 19, 2000. I understand that Jeannet therefore qualifies as prior art to the '660 Patent under AIA 35 U.S.C. § 102(a)(1). Jeannet was not cited or discussed during prosecution of the '660 Patent.

55. Jeannet discloses an attachment mechanism for attaching an attachment (toothbrush head) to a body (toothbrush handle). Ex. 1008, Abstract. Jeannet "improve[s] a toothbrush of the known generic type" by providing a "firm, reliable connection between the brush head and the brush handle" in the longitudinal direction during use while also allowing the brush head to be "released again relatively easily from the brush handle and, if required, replaced by a new brush head." Ex. 1008, 1:29-36. Jeannet implements a "bayonet catch" as the "releasable

connection" between the brush head and the brush handle. Ex. 1008, 1:38-57. To increase the ease with which the bayonet catch can be released, Jeannet discloses an unlocking button 121 on the toothbrush handle that allows the bayonet catch to be moved out of the locked position and released from the toothbrush head. Ex. 1008, 1:29-57; 4:6-33.

56. Having reviewed Jeannet in detail, it is my opinion that one of ordinary skill in the art would have been able to implement the disclosure of Jeannet with little or no experimentation. For example, Jeannet provides sufficient detail regarding its fastening mechanism that one of ordinary skill in the art would have been able to construct the fastening mechanism without undue experimentation. Jeannet is in the same field of endeavor (attachment mechanisms for appliances) as the claimed invention, and specifically relates to handheld appliances. To the extent that the field of endeavor is determined to be hair care appliances, Jeannet is reasonably pertinent to the problem faced by the inventor, which is attachment mechanisms for easy engagement and disengagement of two components.

VIII. CLAIM CONSTRUCTION

57. For purposes of this *inter partes* review, I have considered the claim language, specification, and portions of the prosecution history, to determine the meaning of the claim language as it would have been understood by one of ordinary skill in the art at the time of the invention in the '660 Patent. I have applied the plain

and ordinary meaning to one of ordinary skill in the art, in view of the specification, of each of the terms in the claims of the ’660 Patent.

IX. APPLICATION OF THE PRIOR ART TO THE CLAIMS

58. Based on my review and analysis of the materials cited herein, my opinions regarding the knowledge and understanding of one of ordinary skill in the art in the 2016 timeframe, and my training and experience, it is my opinion that one of ordinary skill in the art would have found the challenged claims invalid in view of the references and combinations of references discussed below. The reasons for my conclusions are explained more fully below.

A. Ground 1: Hoblingre Anticipates Claims 1-9, 15, 23, 24, and 32

59. It is my opinion that Hoblingre discloses each and every element of claims 1-9, 15, 23, 24, and 32 and anticipates those claims.

1. Independent Claim 1

60. It is my opinion that limitations of claim 1 are anticipated and/or rendered obvious by Hoblingre.

[1pre] A handheld appliance

61. I understand that a preamble typically does not limit a claim. Specifically, I am informed that a preamble to a claim is not limiting where it merely states the purpose or intended use of the invention. Here, preamble [1pre] merely

states that the purpose or intended use of the "appliance" is "handheld." Thus, it is my opinion that the preamble is not limiting.

62. Further, I am informed that where the body of the claim describes a structurally complete invention such that deletion of the preamble phrase does not affect the structure, that the preamble is not limiting. Here, deletion of the preamble phrase "handheld" does not affect the structure of the claimed "appliance." Without the "handheld" purpose or intended use, the preamble merely recites an "appliance," which is a generic term. For this additional reason, it is my opinion that the preamble is not limiting.

63. I also note that the dependent claims do not repeat the preamble phrase "handheld." In my opinion, a person of ordinary skill in the art would have recognized that the preamble phrase "handheld" was not intended to be limiting given the fact that it is not repeated in the dependent claims.

64. Without the "handheld" preamble phrase, Element 1[pre] recites "[a]n appliance," a generic term that signals an apparatus claim. Hoblingre discloses this limitation. Hoblingre discloses an improved "rapid fastener" of the "bayonet type" that establishes a connection between "two coaxial shafts." Ex. 1004, 2:14-19. Hoblingre explains that, although "[c]ouplings of this type are well known and employed in many fields," Ex. 1004, 1:13-14, existing mechanisms "are reserved for the connection of elements intended to remain stationary since they can only ensure

with difficulty the reliable transmission of a torque," and generally "require precise moving operations and the application of well-determined clamping forces which create possible errors in the positioning." Ex. 1004, 1:14-25.

65. Hoblingre's improved rapid fastener—i.e., an appliance or apparatus—allows for a secure connection to be established even when there is "no axial or angular clearance" and permits, "on one hand, the transmission of even large torques and, on the other hand, the establishment of the connection by a single shifting" while being "capable of being disassembled at any moment." Ex. 1004, 1:28-35. Additionally, it would have been obvious to use the attachment system of Hoblingre in a handheld appliance. Accordingly, if the preamble is found to be limiting, then it is my opinion that the claims would have been obvious to one of ordinary skill in the art as set forth in Grounds 2 and 3.

[1a] "having a body and an attachment"

66. It is my opinion that Hoblingre discloses this limitation.

67. Hoblingre's rapid fastener is "adapted to interconnect two elements": (1) a first shaft 1 comprising a "male stem carrying at least one laterally projecting pin," illustrated below in red, and (2) a second shaft 2 comprising a "female socket having at least one helical slot" for receiving the pin and "guiding and locking means carried by the socket" that "elastically bias[] the pin into the bottom of the helical slot" to "lock[] the pin" in position, illustrated below in red. Ex. 1004, 1:36-44.

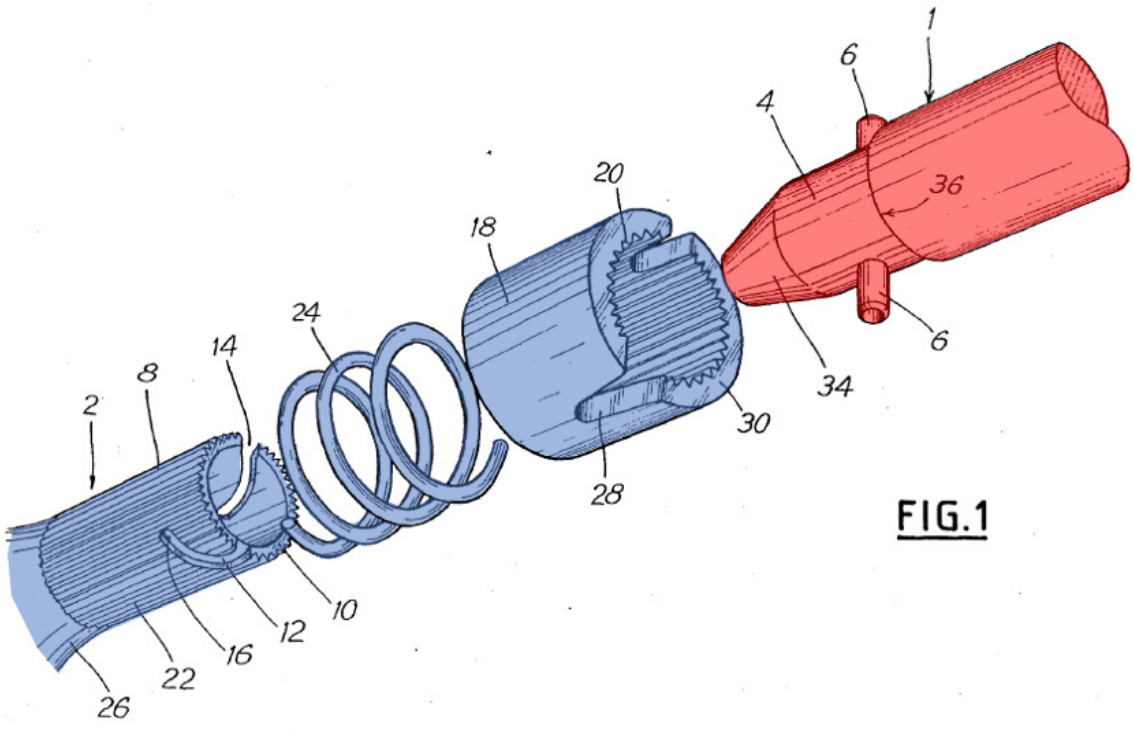

Ex. 1004, FIG. 1 (annotated).

68. The first shaft 1 "has at its end an elongated stem 4 of substantially cylindrical shape which carries at least one driving pin 6 and preferably two pins." Ex. 1004, 2:14-19. The conical end 34 of shaft 1 "facilitates the centering and the entry" of shaft 1 in a socket of the other shaft 2. Ex 1004, 3:49-50.

69. The second shaft 2 "terminates in a hollow, also cylindrical, socket 8 which is open at its entrance end 10" and includes "two slots 12 each capable of receiving one of the pins 6." Ex. 1004, 2:19-23. Each of the slots 12 "has a curved shape, i.e. it includes, following on a substantially axial entrance portion 14, a substantially helical portion 16." Ex. 1004, 2:24-26.

70. The guiding and locking means "carried by the socket," Ex. 1004, 1:42-44, comprises a ring 18 "[s]lidably mounted on the socket 8" having "two slots 28 extending generally longitudinally" that are "open at the end" and have "a divergent shape, their width increasing progressively in the direction toward their open end." Ex. 1004, 2:27-45. The guiding and locking means also comprises a coil spring 24 "mounted around the socket 8" that "bears, on one hand, against the edge of the slidable ring 18, and on the other hand against an outer shoulder or a projection 26 on" shaft 2 so that it biases "the ring 18 outwardly, i.e. in the direction toward the open end 10 of the socket" 8. Ex. 1004, 2:27-38.

71. Hoblingre's second shaft 2 comprising (1) socket 8, for receiving elongated stem 4, and (2) guiding and locking means ring 18 and coil spring 24, for guiding and locking elongated stem 4 in place, discloses a body. Hoblingre's first shaft 1 comprising elongated stem 4, which is inserted into and then locked in position within socket 8 by guiding and locking means, discloses an attachment.

[1b] "the body comprising an attachment mechanism having a first slot and an actuator"

72. It is my opinion that Hoblingre discloses this limitation.

73. As I have explained above, Hoblingre's second shaft 2 comprising socket 8 and the guiding and locking means comprising ring 18 and coil spring 24

together disclose a body. Socket 8 and the guiding and locking means comprising ring 18 and coil spring 24 together disclose an attachment mechanism.

74. Socket 8 includes two slots 12 that are each "curved" in shape and have a "substantially axial entrance portion 14" and a "substantially helical portion 16." Ex. 1004, 2:24-26. The slots 12 are illustrated in a three-quarters view of Hoblingre's appliance below, with the substantially axial entrance portions 14 indicated in blue and the substantially helical portions 16 indicated in yellow.

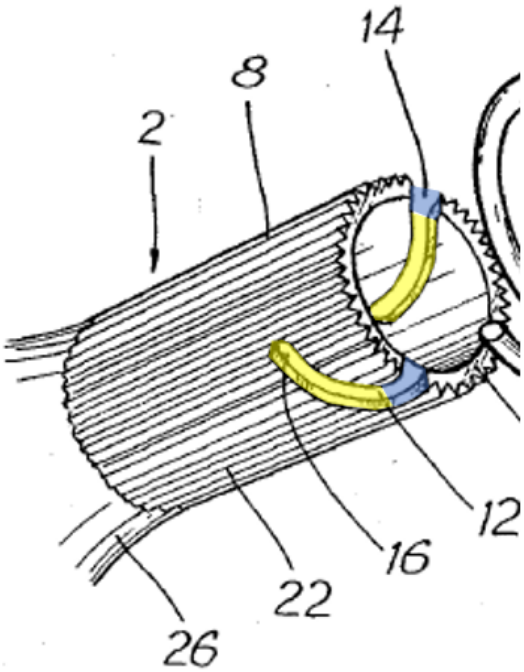

Ex. 1004, FIG. 1 (excerpt, annotated).

75. Either of the slots 12 constitutes a single "first slot" as illustrated below in green. The other of the slots 12 constitutes a single "second slot."

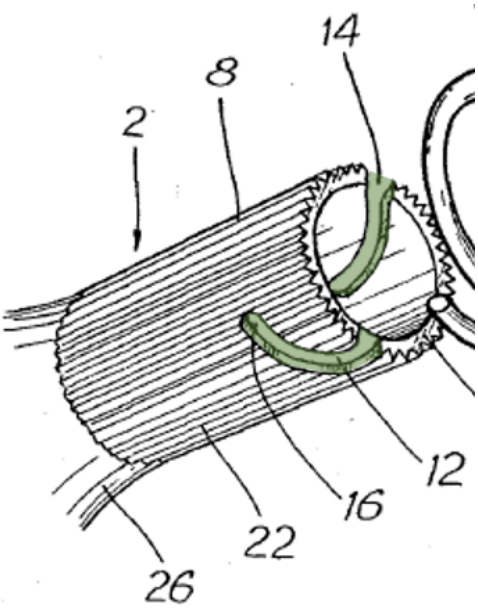

Ex. 1004, FIG. 1 (excerpt, annotated).

76. Hoblingre's guiding and locking means comprises ring 18, illustrated below in red, and coil spring 24, illustrated below in orange. Ex. 1004, 2:27-45. Ring 18 includes "two slots 28" that are each "disposed on top of one of the slots 12 of the socket 8." Ex. 1004, 2:46-50. The slots 28 each "has sufficient width to permit the entry of the pin[s] 6," Ex. 1004, 2:39-45, and is "laterally offset relative to the entrance 14 of the slot 12 so that the end edge of the ring 18 partly closes this entrance of slot 12." Ex. 1004, 2:46-50. Coil spring 24 biases ring 18 "outwardly" toward the open end 10 of socket 8. Ex. 1004, 2:32-38. Hoblingre's guiding and locking means (comprising ring 18 and coil spring 24) constitutes an actuator.

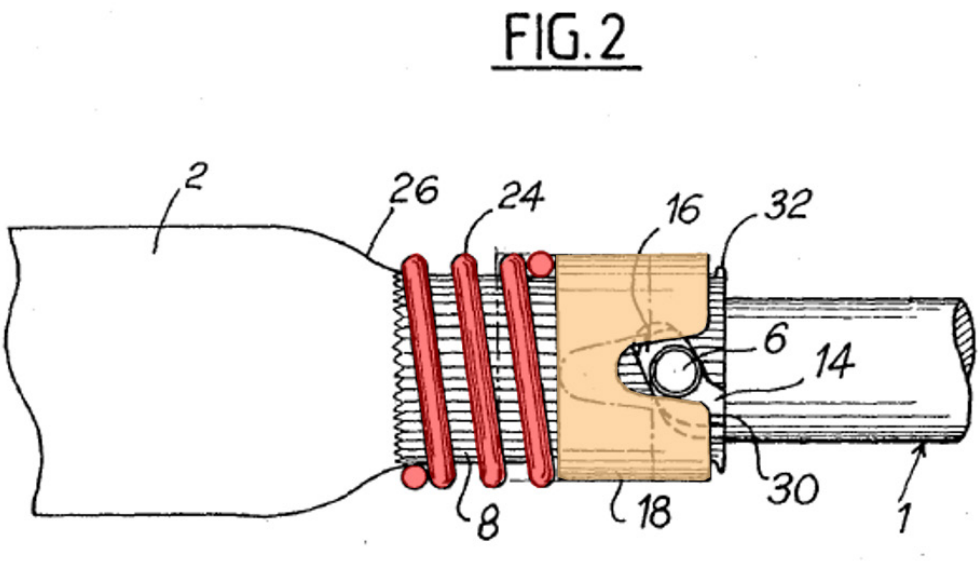

Ex. 1004, FIG. 2 (annotated).

[1c]	**"the attachment comprising a first protrusion configured to engage with the first slot"**

77. It is my opinion that Hoblingre discloses this limitation.

78. As I have explained above, Hoblingre's first shaft comprising elongated stem 4 discloses an attachment. Elongated stem 4 comprises "at least one driving pin 6 and preferably two pins," illustrated below in purple. Ex. 1004, 2:14-19.

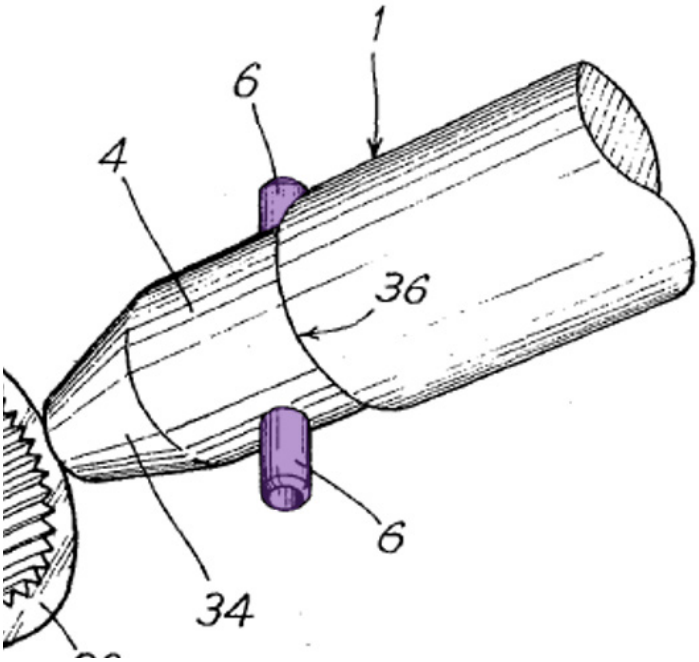

Ex. 1004, FIG. 1 (excerpt, annotated).

79. Elongated stem 4 can be placed inside socket 8 by "placing each of the pins 6 in front of the entrance 14 of one of the slots 12" and then exerting "a mere axial force" on either of shaft 1 or 2. Ex. 1004, 2:58-65. This force "enables the pin[s] 6 to urge back the edge 30 of the ring 18 against the action of the spring 24 and thus to enter the slot 12." Ex. 1004, 2:58-65. Due to the force of coil spring 24 and "the inclination of the lower edge of the portion 16 of the slot 12, the pin[s] 6 [are] progressively laterally urged back by the edge of the slot[s] 28" such that as the pins 6 advance in slots 28, they are "angularly displaced relative to the entrance of the slot[s] 12" and approach the "inner end" of slots 28. Ex. 1004, 2:65-3:3. The pins 6 then slide along the opposed edges of the slots 12 and 28, enabling "the ring 18 to progressiv[ely] resume its initial position," until the pins 6 reach a position

where they are "trapped between edges of the slots 12 and 28 so that at any moment the return movement thereof is precluded." Ex. 1004, 3:3-8.

80. As I have explained above, either one of Hoblingre's slots 12 constitutes a first slot. In the side view of Hoblingre's appliance below, one pin 6, illustrated below in purple, engages with one slot 12 (illustrated below in green). Thus, Hoblingre's pin 6 constitutes a first protrusion configured to engage with the first slot.

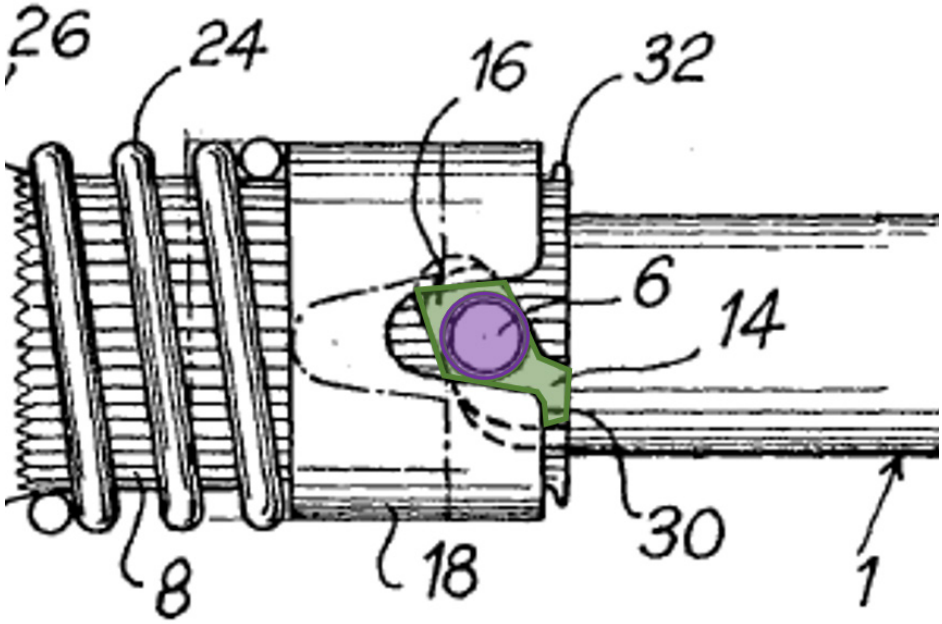

Ex. 1004, FIG. 2 (excerpt, annotated).

[1d]	**"wherein the actuator has a first position and a second position and the actuator is slidably moved from the first position towards the second position in a longitudinal direction of the body as the first protrusion engages with the first slot"**

81. It is my opinion that Hoblingre discloses this limitation.

82. As I have explained above, Hoblingre's guiding and locking means comprising ring 18 and coil spring 24 discloses an actuator. Hoblingre discloses that ring 18 is "axially slidable along the socket" 8, Ex. 1004, 1:45-46, and "biased toward the open end of the [socket]" 8 by "spring 24." Ex. 1004, 1:45-46, 2:27-48. As described above, to enter a locking position, pins 6 enter helical slots 12 and are "angularly displaced" relative to entrances 14 of slots 12 until pins 6 are "trapped between edges of the slots 12 and 28 so that at any moment the return movement thereof is precluded." Ex. 1004, 1:36-63, 2:58-3:36. Thus, Hoblingre's actuator, the locking and guiding means, is slidably moved between a first position (in which ring 18 is positioned at the open end 10 of socket 8, coil spring 24 is not compressed, and pins 6 have not entered slots 12) and a second position (in which ring 18 compresses coil spring 24 as pins 6 advance further into slots 12). Ex. 1004, 2:58-3:36.

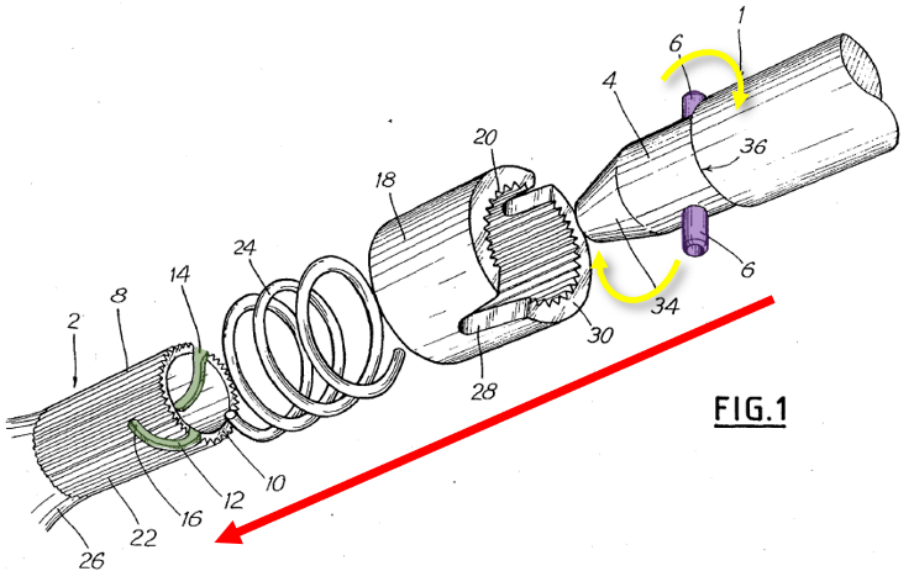

FIG.1

FIG.2

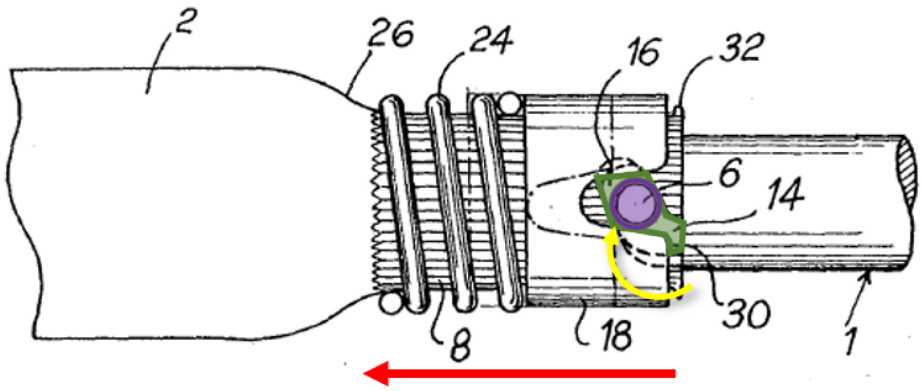

Ex. 1004, FIGS. 1, 2 (annotated).

83. When Hoblingre's actuator moves from the first position, in which coil spring 24 is uncompressed and ring 18 is toward the open end 10 of socket 8, to the second locked position, in which ring 18 slides along a longitudinal "axial" direction of socket 8 (illustrated above by the red arrow) away from the open end 10 of socket 8 and compresses coil spring 24. As ring 18 compresses coil spring 24 and continues

sliding along the longitudinal direction, the first protrusion, into the second position, one of pins 6 (illustrated above in purple) enters the first slot, one of slots 12 (illustrated above in green).

[1e]	**"wherein the body extends along a longitudinal axis and the first slot extends both radially around and axially along the body."**

84. As I have explained above, Hoblingre's socket 8 and guiding and locking means (comprising ring 18 and coil spring 24) constitute a body. As shown below in annotated Figures 1-2, Hoblingre's socket 8, ring 18, and coil spring 24 each extend along a longitudinal axis illustrated in pink. *See* also Ex. 1004, 2:14-23 (describing "coaxial shafts" 1 and 2, where shaft 2 includes an "also cylindrical" socket 8 and a guiding and locking means including a ring 18 that is "[s]lidably mounted" on, and thus coaxial with, socket 8, and a coil spring 24 "also mounted around" socket 8).

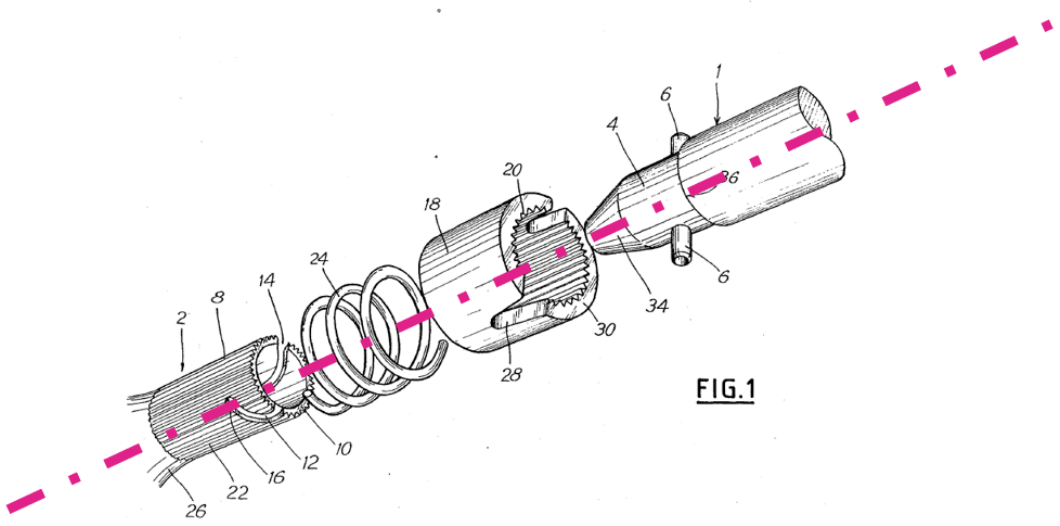

Ex. 1004, FIG. 1 (annotated).

85. Slots 12 each include a "substantially axial entrance portion 14" that extend axially along socket 8, illustrated below in blue, and a "substantially helical portion 16," illustrated below in yellow. Ex. 1004, 2:24-26. Thus, slots 12 each extend both axially, illustrated below in pink, and radially, illustrated below in yellow, along Hoblingre's body component.

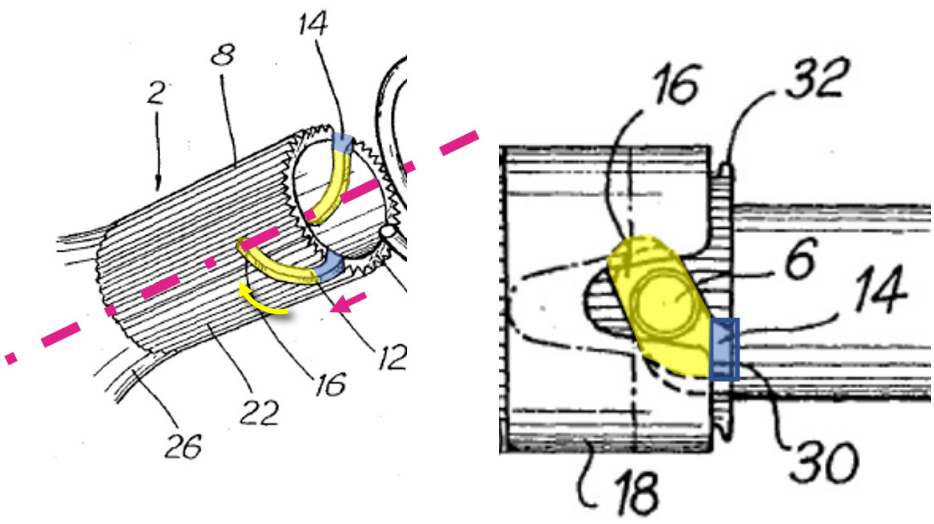

Ex. 1004, FIGS. 1 (left, excerpt, annotated), 2 (right, excerpt, annotated).

86. Thus, Hoblingre discloses each element of claim 1 and anticipates claim 1.

2. Dependent Claim 2

87. It is my opinion that Hoblingre discloses or renders obvious the elements of this claim.

[2]	**"The appliance of claim 1, wherein in the first position, the actuator at least partially obscures the first slot."**

88. It is my opinion that the limitation is disclosed by Hoblingre.

89. As I have explained above, Hoblingre's guiding and locking means comprising ring 18 and coil spring 24 constitutes an actuator, and one of slots 12 in socket 8 comprises the first slot. When elongated stem 4 is introduced inside socket 8, the "end edge 30 of the ring 18" "partly closes," or partially obscures, the entrances of slots 12. Ex. 1004, 2:46-50. Thus, a portion of the actuator (end edge 30 and the edge of one of the slots 28 of ring 18) at least partially obscures the first slot (one of the slots 12) when the actuator is in the first position (ring 18 is toward the open end 10 of the socket 8 and coil spring 24 is not compressed).

3. Dependent Claim 3

90. It is my opinion that Hoblingre discloses or renders obvious the elements of this claim.

[3]	**"The appliance of claim 1, wherein the actuator comprises a surface which interacts with the first protrusion when the first protrusion engages with the first slot."**

91. It is my opinion that the limitation is disclosed by Hoblingre.

92. As I have explained above, Hoblingre's guiding and locking means comprising ring 18 and coil spring 24 constitutes an actuator. Hoblingre discloses that ring 18 includes a surface (the continuous upper surface of ring 18) having at

least two distinct sections (end edge 30 and the edges of slots 28) that interacts with pins 6 when they engage with slots 12. Ex. 1004, 2:46-50, 3:5-8. As I have illustrated in Figure 2 below, with respect to the first slot (one of the slots 12, illustrated in green) and the first protrusion (one of the pins 6, illustrated in purple), a portion of the actuator (the edge of one of the slots 28, illustrated in orange) of ring 18 comprises a surface that interacts with the first protrusion as it engages the first slot in the locked position. Ex. 1004, 3:5-8.

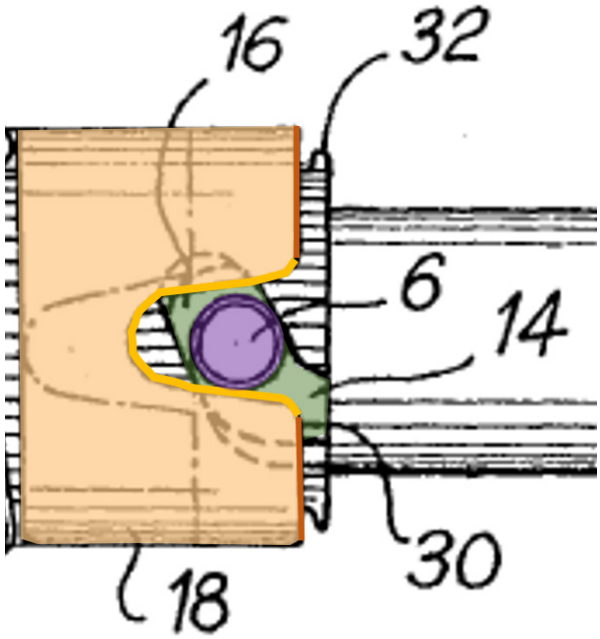

Ex. 1004, FIG. 2 (excerpt, annotated).

4. Dependent Claim 4

93. It is my opinion that Hoblingre discloses or renders obvious the elements of this claim.

[4]	**"The appliance of claim 3, wherein the surface is configured to at least partially define the first slot at or near the second position."**

94. It is my opinion that the limitation is disclosed by Hoblingre.

95. As I have explained above, Hoblingre discloses that the first protrusion (one of the pins 6) engages with the first slot (one of the slots 12) while in the position shown in Figure 2, in which the ring 18 is away from the open end 10 of socket 8 and coil spring 24 is compressed. In the position shown below in Figure 2, "the pin 6 is trapped between edges of the slots 12 and 28 so that at any moment the return movement thereof is precluded." Ex. 1004, 3:5-8. Thus, the edge of one of the slots 28 effectively forms the upper and lower walls of the first slot (as shown in the side view orientation in Figure 2), and at least partially defines the first slot, as illustrated below in bold lines. Ex. 1004, 3:5-8.

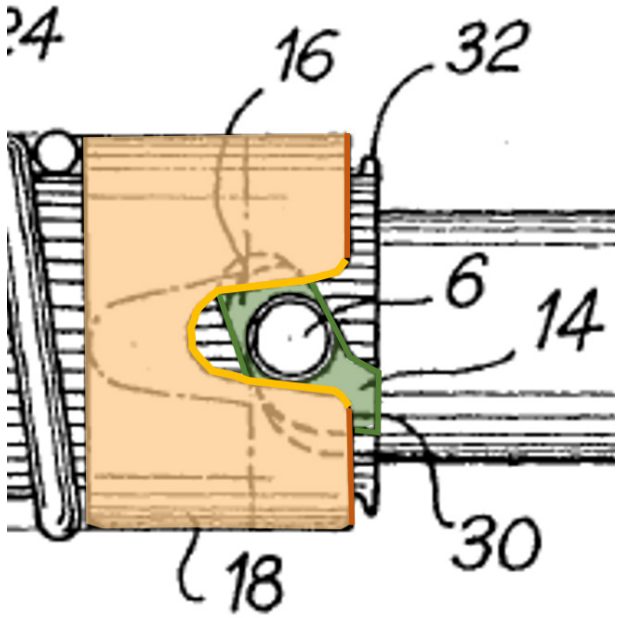

Ex. 1004, FIG. 2 (excerpt, annotated).

5. Dependent Claim 5

96. It is my opinion that Hoblingre discloses or renders obvious the elements of this claim.

[5]	**"The appliance of claim 3, wherein the first protrusion comprises a first face for engagement with the actuator."**

97. It is my opinion that the limitation is disclosed by Hoblingre.

98. As I have explained above, Hoblingre discloses that the first protrusion (one of the pins 6) engages with a surface (the edge of one of the slots 28) of the actuator (guiding and locking means, which comprises ring 18 and coil spring 24) while in the position shown in Figure 2. Hoblingre's first protrusion (one of the pins 6) comprises a continuous cylindrical outer wall surface, or face (illustrated in a bold purple line), that engages the actuator (the edge of the slots 28 shown in orange below). Ex. 1004, 2:46-50, 3:5-8.

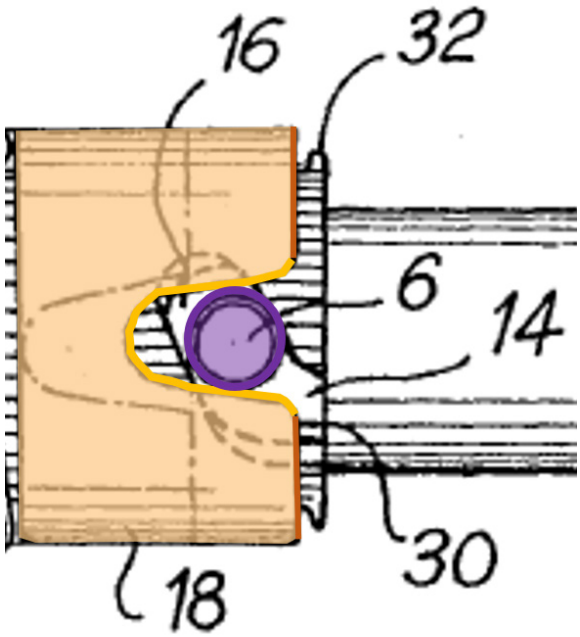

Ex. 1004, FIG. 2 (excerpt, annotated).

6. Dependent Claim 6

99. It is my opinion that Hoblingre discloses or renders obvious the elements of this claim.

[6]	**"The appliance of claim 5, wherein the first face engages with the surface of the actuator."**

100. It is my opinion that the limitation is disclosed by Hoblingre.

101. As I have explained above, Hoblingre discloses that the first face (illustrated below in a bold purple line) of the first protrusion (one of the pins 6) engages the surface (the edge of one of the slots 28 illustrated below in a bold orange line) of the actuator (guiding and locking means comprising ring 18 and coil spring 24). Ex. 1004, 2:46-50, 3:5-8.

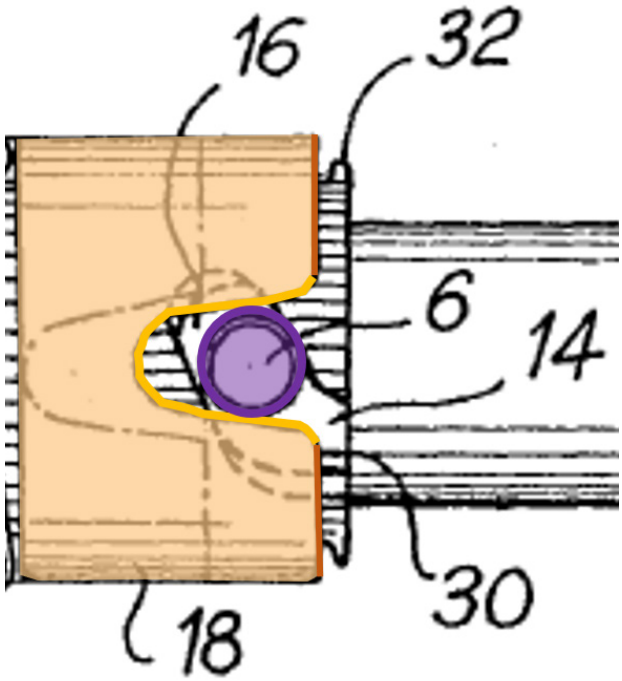

Ex. 1004, FIG. 3 (annotated).

7. Dependent Claim 7

102. It is my opinion that Hoblingre discloses or renders obvious the elements of this claim.

[7]	**"The appliance of claim 1, wherein when the first protrusion is at a predetermined position within the first slot, the actuator returns towards the first position."**

103. It is my opinion that the limitation is disclosed by Hoblingre.

104. Hoblingre discloses that when its first protrusion (one of the pins 6) is fully within the "inner end" of the first slot (one of the slots 12), the first protrusion "then slides along the opposed edges of the two slots" 12 and 28 "and thereby enables the ring 18 to progressiv[ely] resume its initial position. Ex. 1004, 2:58-3:8.

105. Thus, when the first protrusion (one of the pins 6) is at a predetermined position (i.e., at the inner end of one of the slots 12), the actuator (guiding and locking means comprising ring 18 and coil spring 24) returns toward its first position in which ring 18 is toward the open end 10 of socket 8 and coil spring 24 is less compressed.

8. Dependent Claim 8

106. It is my opinion that Hoblingre discloses or renders obvious the elements of this claim.

[8]	**"The appliance of claim 7, wherein the actuator retains the attachment on the body."**

107. It is my opinion that the limitation is disclosed by Hoblingre.

108. As I have explained above, Hoblingre discloses that its actuator (guiding and locking means comprising ring 18 and coil spring 24) "closely lock[s] together" the shafts 1 and 2 such that their "axial displacement is precluded by the contact of the pin[s] 6 and the edges of the slot[s] 12 while their relative displacement in rotation is precluded by the contact of the pin[s] 6 with the edges of the two slots 12 and 28." Ex. 1004, 3:14-35. Thus, Hoblingre discloses that its actuator retains the attachment (shaft 1) on the body (shaft 2). The connection is "without clearance, as the angular and/or axial clearances are automatically taken up by the compression spring, irrespective of the manufacturing tolerances and the wear of the assembly." Ex. 1004, 3:14-35.

FIG. 2

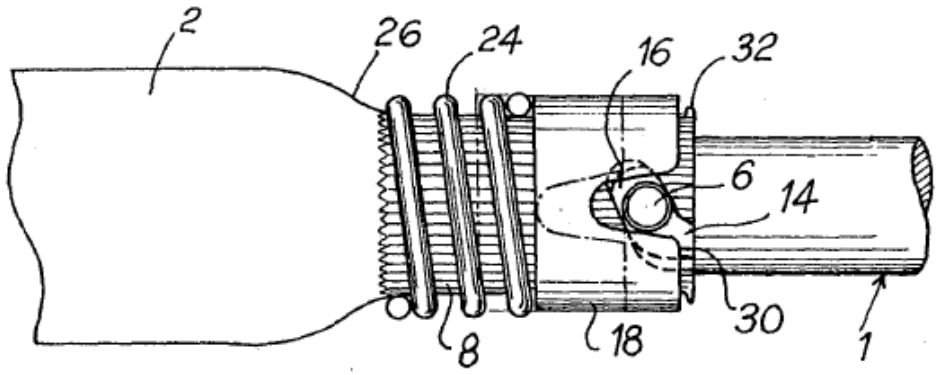

Ex. 1004, FIG. 2.

9. Dependent Claim 9

109. It is my opinion that Hoblingre discloses or renders obvious the elements of this claim.

[9]	**"The appliance of claim 1, wherein the actuator is biased into the first position."**

110. It is my opinion that the limitation is disclosed by Hoblingre.

111. As I have explained above, Hoblingre discloses that its actuator (guiding and locking means comprising ring 18 and coil spring 24) is biased into the first position "i.e. in the direction toward the open end 10 of the socket" 8 by coil spring 24. Ex. 1004, 2:32-38.

FIG. 2

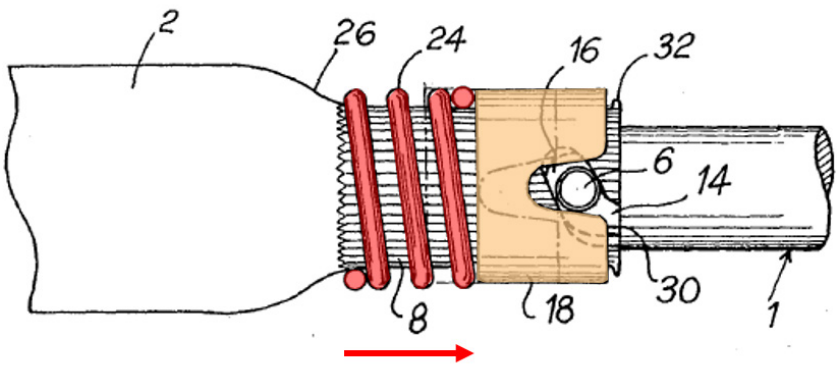

Ex. 1004, FIG. 2 (annotated).

10. Dependent Claim 15

112. It is my opinion that Hoblingre discloses or renders obvious the elements of this claim.

[15]	**"The appliance of claim 1, wherein the body has a first end and a second end and the attachment mechanism is adjacent the second end."**

113. It is my opinion that the limitation is disclosed by Hoblingre.

114. As I have explained above, Hoblingre's shaft 2 "terminates in" socket 8 and guiding and locking means (comprising ring 18 and coil spring 24) constitutes a body. Ex. 1004, 2:14-23. A first end of the component comprising socket 8 and guiding and locking means (comprising ring 18 and coil spring 24) is not shown and extends toward the left side of socket 8 in Figures 1 and 2 indicated by blue arrows. A second end of shaft 2 terminating in socket 8 and guiding and locking means comprising ring 18 and coil spring 24 is shown in Hoblingre's Figures 1 and 2 (e.g.,

the right side of socket 8 at the opening 10 indicated by red arrows). As illustrated in Figures 2 and 3, guiding and locking means is adjacent to the end indicated by red arrows, which constitutes a second end. Ex. 1004, 2:14-23.

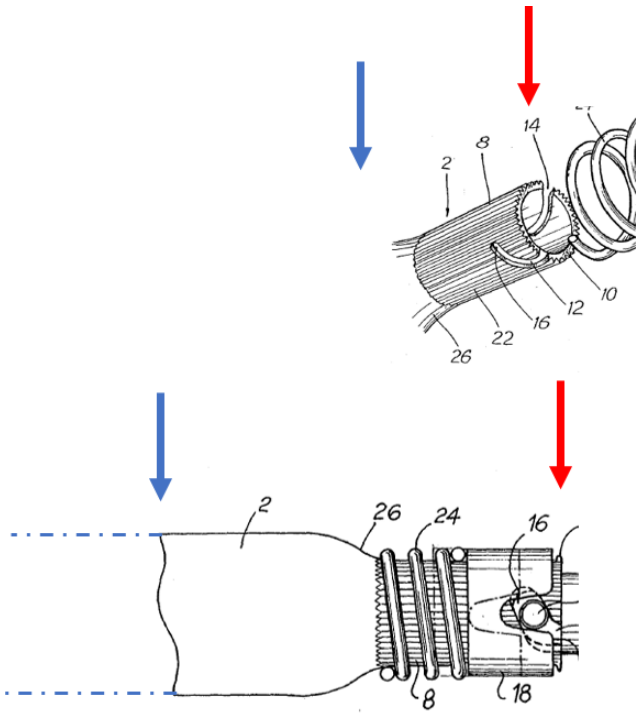

Ex. 1004, FIGS. 1, (top, excerpt, annotated) 2 (bottom, excerpt, annotated).

11. Dependent Claim 23

115. It is my opinion that Hoblingre discloses or renders obvious the elements of this claim.

[23] "The appliance of claim 1, comprising a second protrusion and a second slot."

116. It is my opinion that the limitation is disclosed by Hoblingre.

117. As I have explained above, Hoblingre discloses two slots 12. Due to the side view perspective of Hoblingre's Figure 2, the discussion herein has focused on

one slot 12 constituting the first slot and one slot 28 constituting the first protrusion. Hoblingre explicitly discloses a second slot (the other one of the slots 12 illustrated below in green) opposite from the first slot and corresponding to a second protrusion (the other one of the pins 6 illustrated below in purple) which is opposite the first protrusion. Ex. 1004, [0011]-[0015].

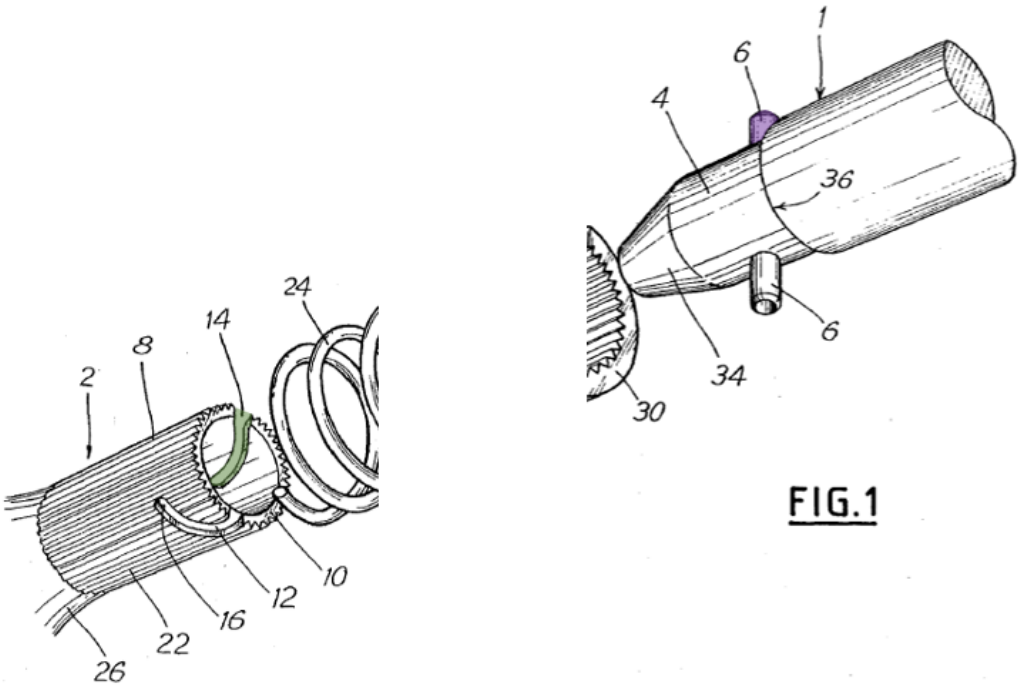

Ex. 1004, FIG. 1 (excerpt, annotated).

12. Dependent Claim 24

118. It is my opinion that Hoblingre discloses or renders obvious the elements of this claim.

[24]	**"The appliance of claim 23, wherein the second protrusion and second slot are radially spaced from the first protrusion and the first slot."**

119. It is my opinion that the limitation is disclosed by Hoblingre.

120. As I have explained above, Hoblingre's first slot (one of the slots 12) and second slot (the other of the slots 12) are opposite each other, as are Hoblingre's first protrusion (one of the pins 6) and second protrusion (the other of the pins 6). Thus, the second slot and second protrusion are radially spaced from the first slot and first protrusion.

13. Dependent Claim 32

121. It is my opinion that Hoblingre discloses or renders obvious the elements of this claim.

[32]	**"The appliance of claim 1, wherein the first slot causes the attachment to pivot relative to the body as the first protrusion engages with the first slot."**

122. It is my opinion that the limitation is disclosed by Hoblingre. Specifically, because Hoblingre's first slot, one of the slots 12, includes a portion (substantially helical portion 16) extending laterally, this portion causes the attachment (shaft 1 terminating in elongated stem 4) to pivot (i.e., be angularly displaced or rotate about its longitudinal axis) relative to the body (shaft 2 comprising socket 8 and guiding and locking means comprising ring 18 and coil spring 24) as the pins 6 are locked into place by engaging slot 12 and the edges of

slot 28. Ex. 1004, 2:58-3:8 ("owing to the force exerted by the spring 24 and the inclination of the lower edge of the portion 16 of the slot 12, [each] pin 6 is progressively laterally urged back by the edge of the slot 28 so that, as it axially advances in the socket, it is angularly displaced relative to the entrance of the slot 12").

B. Ground 2: Hoblingre in View of Maclaine Renders Obvious Claims 1-9, 15, 18, 23, 24, and 30-32

123. Maclaine discloses a handheld hair care appliance having a body and various attachments that mate with corresponding protrusions on a collar of a head via a "twist lock joint." Ex. 1007, [0092]. The combination of Hoblingre and Maclaine renders obvious claims 18, 30, and 31 of the '660 patent. To the extent that the preamble of claim 1 is determined to be limiting, the combination of Hoblingre and Maclaine additionally renders obvious claims 1-9, 15, 23, 24, and 32. I incorporate by reference my analysis with respect to Ground 1 above. *See* Section IX.A.

1. Motivation to Combine Hoblingre and Maclaine

124. In my opinion, one of ordinary skill in the art would have been motivated to combine Hoblingre and Maclaine to achieve the claimed invention. Specifically, one of ordinary skill in the art would have found it obvious that Hoblingre's appliance could be a handheld appliance, and that Hoblingre's improved bayonet attachment mechanism could be used in a handheld hair care appliance as

taught in Maclaine been motivated to incorporate the improved bayonet attachment mechanism of Hoblingre into a handheld hair care appliance as taught by Maclaine. One of ordinary skill in the art would have been motivated to implement Hoblingre's "rapid fastener which, while having the advantages of a coupling of the bayonet type, ensures a connection with no axial or angular clearance permitting, on one hand, the transmission of even large torques and, on the other hand, the establishment of the connection by a single shifting and being capable of being disassembled at any moment" in a handheld hair care appliance as taught by Maclaine. Ex. 1004, 1:28-35. Maclaine discloses a variety of "heads" or attachments that are interchangeable and can be attached to a hair care appliance body. Each of the multiple attachments performs different functions, and a user of the hair care appliance would have been likely to use multiple attachments—for example, first to detangle and dry, and then to curl and style—and would have wanted to switch attachments out quickly and efficiently. Thus, one of ordinary skill in the art reviewing the hair care appliance system of Maclaine would have found implementing an easy and efficient attachment mechanism that is "extremely reliable and safe," "does not require any precise handling," and is "very easily dismantled" in a handheld hair care appliance desirable and would have been motivated to do so. Ex. 1004, 3:24-40.

125. In my opinion, one of ordinary skill in the art would have understood that there were a variety of known bayonet coupling mechanisms, including the

mechanism discussed in Hoblingre. Further, one of ordinary skill in the art would have understood that implementing Hoblingre's bayonet coupling mechanism in a handheld hair care appliance as taught in Maclaine would have achieved Hoblingre's stated goal of providing a simple, reliable, and easy to disable mechanism while improving the usability of a hair care appliance when rotated through hair. Ex. 1004, 3:24-40.

126. Hoblingre explains that "[c]ouplings of this type are well known and employed in many fields," Ex. 1004, 1:13-14, and Maclaine teaches that for its fixing mechanism between the attachment and the body, "it will be apparent to the skilled person that other equally acceptable alternative mechanisms could be used." Ex. 1007, [0092]. Thus, the combination of Hoblingre and Maclaine with respect to the attachment mechanism is nothing more than the use of a known technique (a coupling mechanism according to Hoblingre) to improve devices (handheld hair care appliances as taught by Maclaine) in the same way to yield predictable results (fast, extremely simple, and reliable coupler mechanism).

127. Furthermore, it would have been obvious to one of ordinary skill in the art to use the attachment assembly disclosed in Hoblingre in a handheld hair care appliance as taught by Maclaine since such a modification is a simple substitution. Maclaine already contemplates the use of a bayonet coupling. And, as Hoblingre explains, bayonet couplings have been known and employed in many fields for

decades as a simple, reliable solution for assembling two elements. One of ordinary skill in the art would have had a reasonable expectation of success in implementing a simple substitution of one type of bayonet coupling for another, more robust type of bayonet coupling, to achieve a more secure connection. Therefore, one of ordinary skill in the art would have been motivated to utilize the attachment mechanism of Hoblingre in a handheld hair care appliance as taught by Maclaine to provide a more secure, simple connection.

2. Independent Claim 1

128. It is my opinion that limitations of claim 1 are rendered obvious by Hoblingre in view of Maclaine.

[1pre] "A handheld appliance"

129. It is my opinion that Hoblingre discloses this limitation as I have explained above. To the extent that the preamble is found limiting, it is my opinion that Hoblingre in view of Maclaine renders this claim element obvious. Maclaine discloses a head, or "an attachment," "for a hand held appliance, in particular a hair care appliance such as a hot styling brush." Ex. 1007, [0002].

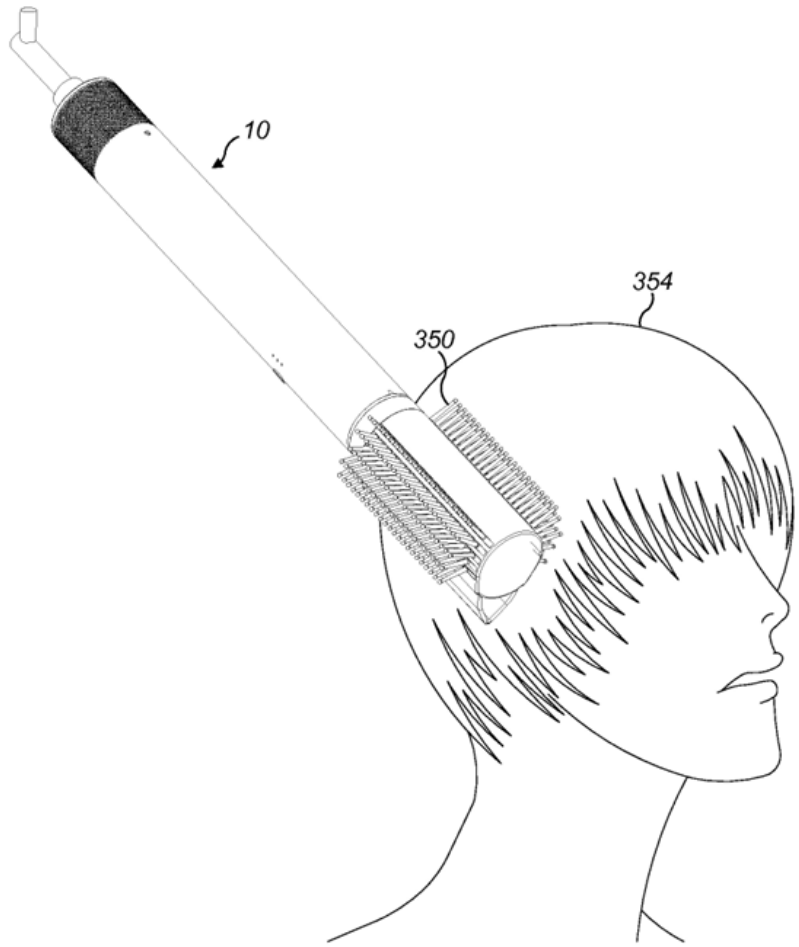

FIG. 14

Ex. 1007, FIG. 1.

3. Dependent Claim 15

[15]	**"The appliance of claim 1, wherein the body has a first end and a second end and the attachment mechanism is adjacent the second end."**

130. It is my opinion that Hoblingre discloses this limitation as I have discussed above. *See* Section IX.A.10 which I incorporate here by reference. To the extent Hoblingre does not explicitly disclose this limitation, Hoblingre in view of Maclaine renders it obvious.

131. Maclaine teaches that the body of its handheld hair care appliance, handle 20, includes "one end 24," a first end (illustrated by a blue arrow), and a "distal end 22," a second end (illustrated by a red arrow). Ex. 1007, [0046]-[0047]. Maclaine's slot 90 that engages the protrusions on the internal surface of its attachment 30 and those protrusions collectively constitute Maclaine's "twist lock joint" and are located at the "distal end 22" of the body of Maclaine's handheld hair care appliance. Ex. 1007, [0046]-[0047].

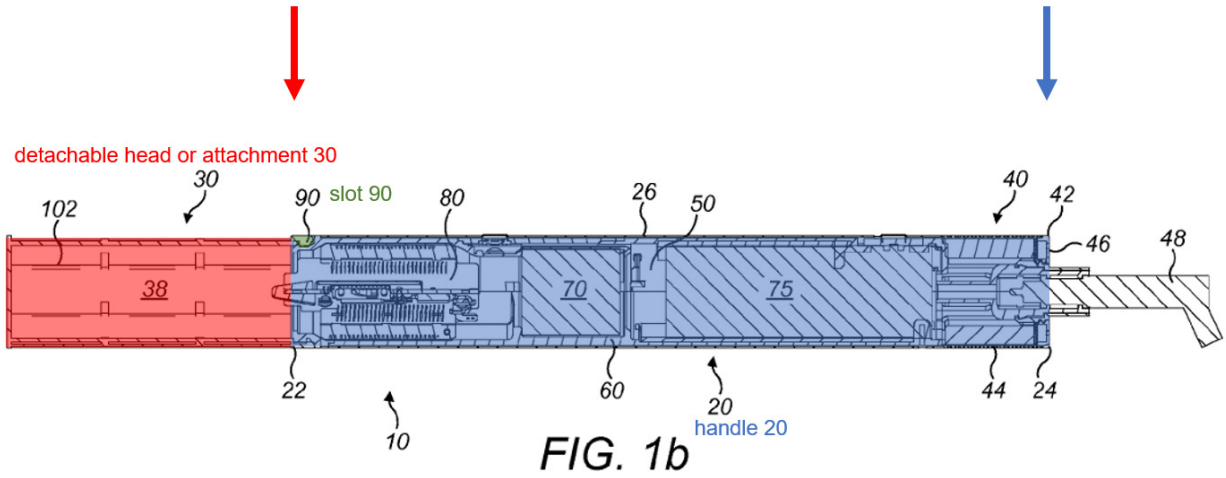

Ex. 1007, FIG. 1b (annotated).

4. Dependent Claim 18

[18]	**"The appliance of claim 1, wherein the attachment comprises a collar extending around the attachment and the first protrusion extends from the collar."**

132. It is my opinion that Hoblingre discloses claim 1 as I have discussed above. *See* Section IX.A.1 which I incorporate here by reference.

133. In my opinion, Maclaine teaches this additional limitation of claim 18. For example, Maclaine discloses that its attachment "head" is connected to the handle "via a collar and a twist lock joint." Ex. 1007, [0092]. Maclaine's attachment collar includes "three protrusions" on "the internal surface of the collar" adapted to "engage a slot 90 (*see* FIG. 1*b*)" or "three separate slots provided near the distal end" of the handle. Ex. 1007, [0092]. Although the "protrusions" are not shown in Figure 7b—the figure with respect to which the protrusions are discussed—the protrusions (illustrated in purple) are shown on the internal surface of the collar (illustrated in light blue) in various other figures in Maclaine, such as Figure 3b, reproduced below.

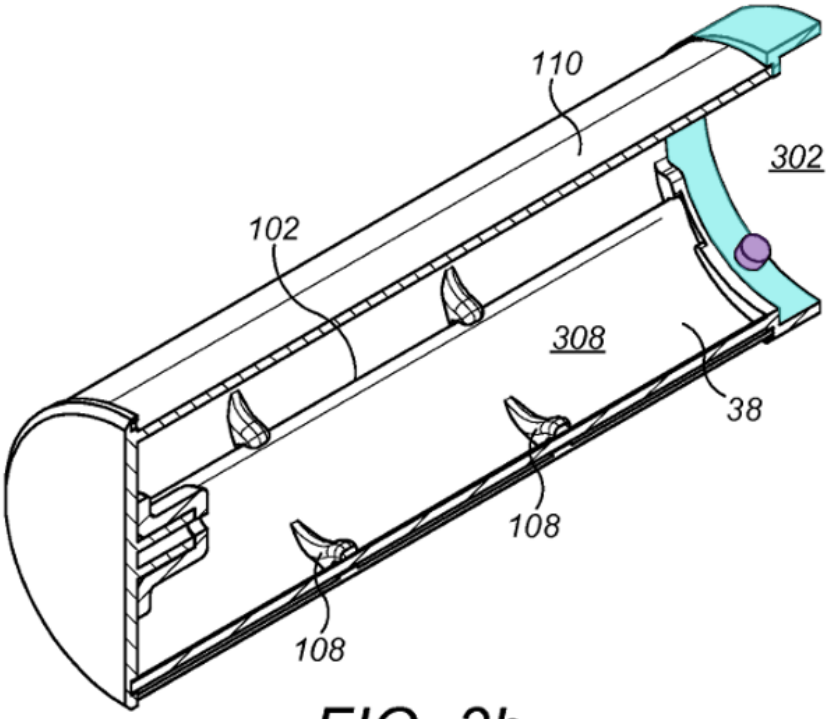

FIG. 3b

Ex. 1007, FIG. 3b (annotated).

134. Maclaine's slot 90, with which the protrusions on the internal surface of the collar of the attachment 30, are configured to engage, is located on the "distal end 22" of the handle 20, or body, of its handheld hair care appliance, and is illustrated below in green.

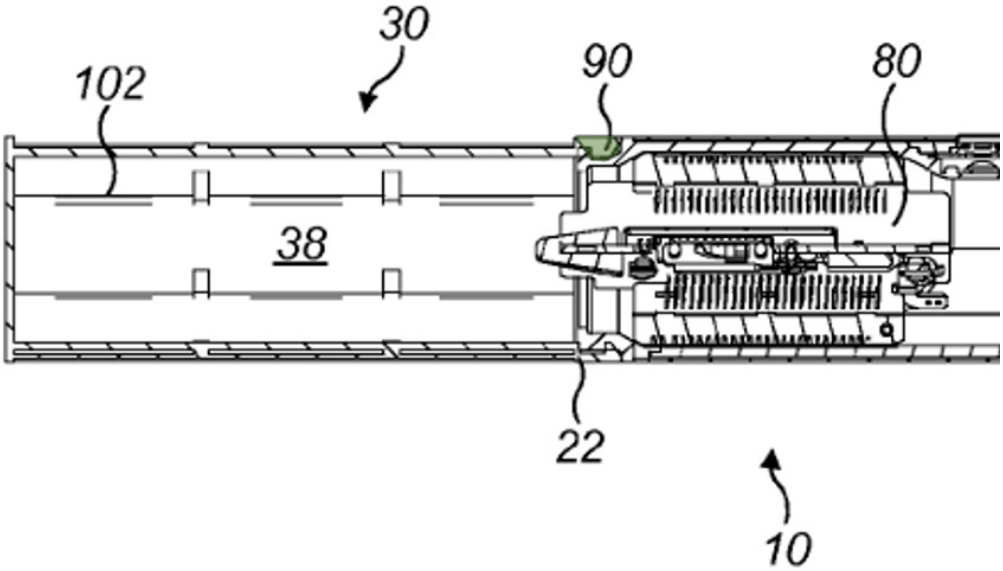

Ex. 1007, FIG. 1b (excerpt, annotated).

135. For the reasons I have explained above in Section IX.B.1 (incorporated herein by reference), one of ordinary skill in the art would have been motivated to combine Hoblingre and Maclaine and would have had a reasonable expectation of success in making the combination. Thus, the combination of Hoblingre and Maclaine renders claim 18 obvious.

5. Dependent Claim 30

[30]	**"The appliance of claim 1, wherein the appliance is a hair care appliance."**

136. It is my opinion that Hoblingre discloses the limitations of claim 1, as I have explained above. *See* Section IX.A.1 which I incorporate here by reference. In my opinion, Maclaine teaches this additional limitation of claim 30. For example, Maclaine discloses "a hair care appliance." Ex. 1007, [0002]-[0007] and [0019]-[0020]. For the reasons I have explained above in Section IX.B.1 (incorporated herein by reference), one of ordinary skill in the art would have been motivated to combine Hoblingre and Maclaine and would have had a reasonable expectation of success in making the combination. Thus, the combination of Hoblingre and Maclaine renders claim 30 obvious.

6. Dependent Claim 31

[31]	**"The appliance of claim 30, wherein the hair care appliance is a hot styling appliance."**

137. It is my opinion that Hoblingre in view of Maclaine discloses the limitations of claim 30, as I have explained above. *See* Section IX.A.5 which I incorporate here by reference. In my opinion, Maclaine teaches this additional limitation of claim 31.

138. For example, Maclaine discloses that the hair care appliance can be "a hot styling appliance such as a hot styling brush." Ex. 1007, [0002]-[0007] and

[0019]-[0020]. For the reasons explained in Section IX.B.1 (incorporated herein by reference), one of ordinary skill in the art would have been motivated to combine Hoblingre and Maclaine and would have had a reasonable expectation of success in making the combination. Thus, the combination of Hoblingre and Maclaine renders claim 31 obvious.

C. Ground 3: Hoblingre in View of Maclaine and Jeannet Renders Obvious Claims 1-9, 15, 18, 23, 24, 30-34

139. Jeannet discloses an attachment mechanism for attaching an attachment (toothbrush head) to a body (toothbrush body). The combination of Hoblingre in view of Maclaine and Jeannet additionally renders obvious claims 33 and 34 of the ’660 patent. I incorporate by reference my analysis with respect to Grounds 1 and 2 above. *See* Sections IX.A and IX.B.

1. Motivation to Combine Hoblingre, Maclaine, and Jeannet

140. *See* Section IX.B.1 (which I incorporate here in its entirety by reference). As I have explained above, one of ordinary skill in the art would have been motivated to combine Hoblingre and Maclaine, and would have had a reasonable expectation of success in doing so. Additionally, one of ordinary skill in the art would have been motivated to incorporate an unlocking button, as taught by Jeannet’s unlocking button 121, into the combined Hoblingre and Maclaine system.

141. One of ordinary skill in the art would have understood that an unlocking interface in the form of an unlocking button, when combined with Hoblingre and

Maclaine's handheld hair care appliance, would achieve the benefits of providing a "relatively eas[y]" way to release the bayonet coupling between the body and attachment of the combined system. Ex. 1008, 1:29-36.

142. Furthermore, it would have been obvious to one of ordinary skill in the art to modify the combined system of Hoblingre and Maclaine to use an unlocking button as disclosed in Jeannet, since such a modification is a simple addition. The combined system of Hoblingre and Maclaine already uses a bayonet coupling, and the implementation of Jeannet's unlocking button would require only adding Jeannet's button 121 to the outside of Hoblingre's ring 18. Both mechanisms function in the same manner (*i.e.*, they slide longitudinally) to achieve the same results, namely moving a protrusion to releasing an attachment mechanism. Using a button to facilitate easy release of an attachment mechanism was well known as of September 2016. For example, "in order to prevent" an attachment "from detaching itself from" a hair dryer "inadvertently," "a locking means 20 having a projection 22" can be used "[f]ollowing insertion and rotation of the" attachment relative to the hair dryer to lock the attachment to the hair dryer, or to release the attachment from the hair dryer. Ex. 1009, 4:48-56. One of ordinary skill in the art would have had a reasonable expectation of success in implementing a simple addition of one component of a bayonet coupling to another that performs the same function to achieve a simpler, easier to use unlocking mechanism. Therefore, in my opinion, one

of ordinary skill in the art would have been motivated to implement the unlocking interface of Jeannet in the combined Hoblingre and Maclaine handheld hair care appliance.

2. Independent Claim 33

143. It is my opinion that limitations of claim 33 are rendered obvious by Hoblingre in view of Maclaine and Jeannet.

[33pre] "A handheld appliance"

144. As I have discussed above with respect to Section IX.A.1 (incorporated herein by reference), I understand that a preamble typically does not limit a claim. Specifically, I am informed that a preamble to a claim is not limiting where it merely states the purpose or intended use of the invention. Here, preamble [33pre] merely states that the purpose or intended use of the "appliance" is "handheld." Thus, it is my opinion that the preamble is not limiting.

145. Further, I am informed that where the body of the claim describes a structurally complete invention such that deletion of the preamble phrase does not affect the structure, that the preamble is not limiting. Here, deletion of the preamble phrase "handheld" does not affect the structure of the claimed "appliance." Without the "handheld" purpose or intended use, the preamble merely recites an "appliance," which is a generic term. For this additional reason, it is my opinion that the preamble is not limiting.

146. I also note that the dependent claims do not repeat the preamble phrase "handheld." In my opinion, a person of ordinary skill in the art would have recognized that the preamble phrase "handheld" was not intended to be limiting given the fact that it is not repeated in the dependent claims.

147. Without the "handheld" preamble phrase, Element 33[pre] recites "[a]n appliance," a generic term signaling an apparatus claim. Hoblingre discloses this limitation. Hoblingre discloses an improved "rapid fastener" of the "bayonet type" that establishes a connection between "two coaxial shafts." Ex. 1004, 2:14-19.

148. To the extent the preamble is found limiting, Hoblingre in view of Maclaine and Jeannet renders this claim element obvious. For example, Maclaine discloses a head, or "an attachment," "for a hand held appliance, in particular a hair care appliance such as a hot styling brush." Ex. 1007, [0002].

[33a] "having a body and an attachment"

149. As I have explained above, Hoblingre discloses this limitation. I incorporate my analysis with respect to claim element [1a] in its entirety here by reference. *See* Section IX.A.1, which I incorporate here in its entirety by reference. Thus, Hoblingre in view of Maclaine and Jeannet renders this claim element obvious.

[33b] "the body comprising an attachment mechanism having a first slot and an actuator"

150. As I have explained above, Hoblingre discloses this limitation. I incorporate my analysis with respect to claim element [1b] in its entirety here by reference. *See* Section IX.A.1, which I incorporate here in its entirety by reference. Thus, Hoblingre in view of Maclaine and Jeannet renders this claim element obvious

[33c] "the attachment comprising a first protrusion configured to engage with the first slot"

151. As I have explained above, Hoblingre discloses this limitation. I incorporate my analysis with respect to claim element [1c] in its entirety here by reference. *See* Section IX.A.1, which I incorporate here in its entirety by reference. Thus, Hoblingre in view of Maclaine and Jeannet renders this claim element obvious.

[33d] "wherein the actuator has a first position and a second position and the actuator is slidably moved from the first position towards the second position in a longitudinal direction of the body as the first protrusion engages with the first slot"

152. As I have explained above, Hoblingre discloses this limitation. I incorporate my analysis with respect to claim element [1d] in its entirety here by reference. *See* Section IX.A.1, which I incorporate here in its entirety by reference. Thus, Hoblingre in view of Maclaine and Jeannet renders this claim element obvious.

[33e] "further comprising a user operated button which engages with the actuator."

153. It is my opinion that Hoblingre in view of Maclaine and Jeannet renders this limitation obvious.

154. For example, Jeannet discloses a "bayonet catch" for attaching an attachment (toothbrush head) to a body (toothbrush body). Ex. 1008, Abstract. As shown in the Figure below, the toothbrush body has a locking pin 28 that is biased toward the toothbrush head end by a helical spring 52, and that has a bayonet stud 32 on the end that engages with a locking groove 106 formed in the toothbrush head.

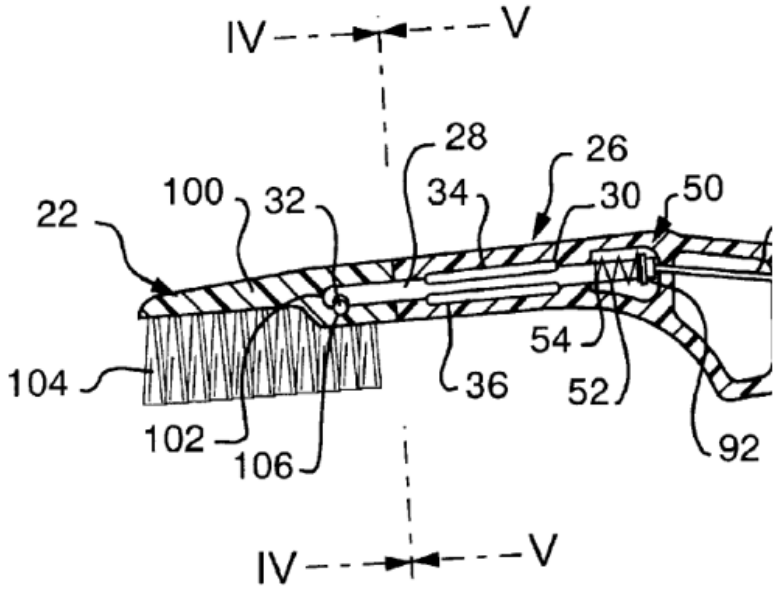

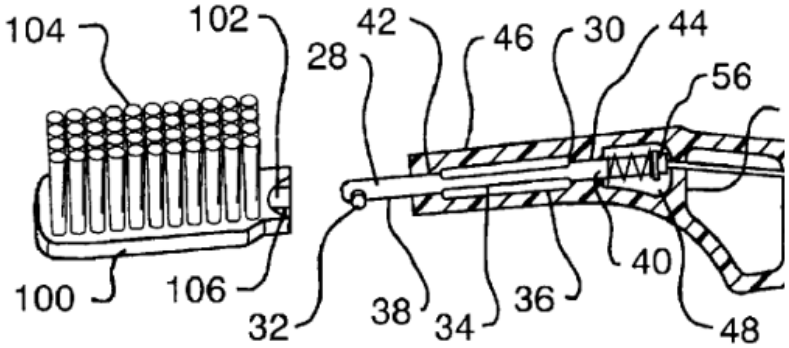

Ex. 1008, FIG. 1 (top, excerpt), FIG. 2 (bottom, excerpt).

155. Locking groove 106 has a curved configuration, as shown in Figure 6 below. The spring-bias force provided by helical spring 52 retains bayonet stud 32 in a lock-in portion 114 in the slot. Ex. 1008, 3:41-57.

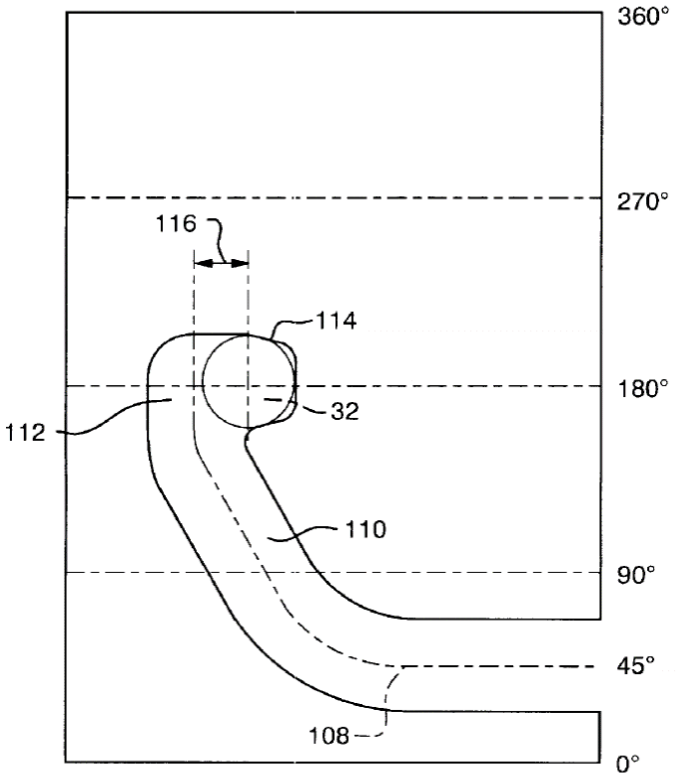

FIG. 6

Ex. 1008, FIG. 6.

156. In one embodiment, shown in Figure 10 below, the toothbrush body includes a release mechanism in the form of an "unlocking button 121" (illustrated below in light pink) on the toothbrush body that slides longitudinally (illustrated by a light pink arrow). Ex. 1008, 4:6-33. Jeannet's "unlocking button 121" is attached to "a connecting pin 124 in an elongated slot 122 on the rear side of the handle neck," and the connecting pin 124 is "secured on the underside of the unlocking button 120" and "firmly connected to the locking pin 28 by means of a locking peg 126." Ex. 1008, 4:6-33.

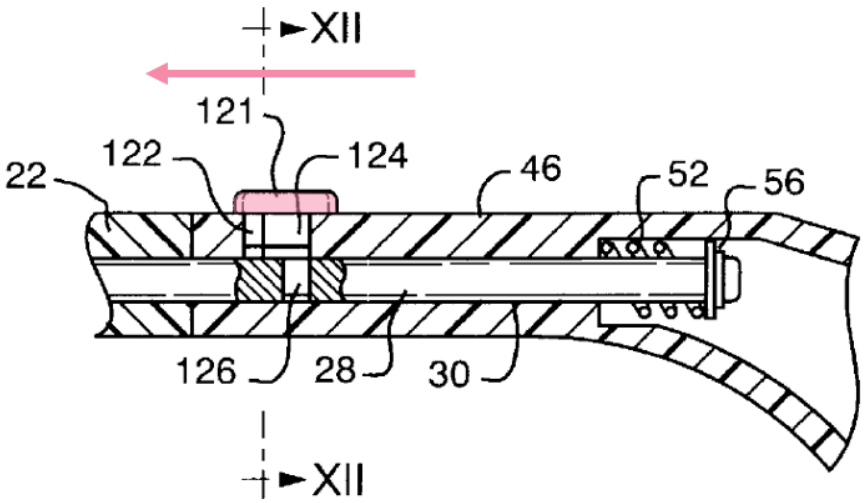

FIG. 10

Ex. 1008, FIG. 10 (annotated).

157. Thus, when unlocking button 121 is advanced toward the toothbrush head, bayonet stud 32 can be moved out of the lock-in portion 114 and released from the toothbrush head. Ex. 1008, 1:29-57; 4:6-33.

158. For the reasons I have discussed above in Section IX.C.1 (incorporated herein by reference), one of ordinary skill in the art would have been motivated to combine Hoblingre, Maclaine, and Jeannet, and would have had a reasonable expectation of success in making the combination. In my opinion, it would have been obvious to add a button to ring 18 of Hoblingre in view of Jeannet's teaching of button 121, because such a modification would be a simple addition. Both mechanisms function in the same manner (*i.e.*, they slide longitudinally) to achieve the same results, namely moving a protrusion to releasing an attachment mechanism.

Ex. 1008, Fig. 10. Thus, in my opinion, the combination of Hoblingre, Maclaine, and Jeannet renders "a user operated button which engages the actuator" obvious and claim 33 obvious.

3. Dependent Claim 34

[34]	**"The appliance of claim 33, wherein actuation of the button moves the actuator from the first position to the second position to facilitate removal of an attachment from the body."**

159. It is my opinion that Hoblingre in view of Maclaine and Jeannet discloses this limitation. As I have explained above, actuation of Jeannet's unlocking button 121 moves connecting pin 124, which is attached to locking peg 126, longitudinally, which in turn moves locking pin 28 and compresses helical spring 52, to thereby move locking peg 126 out of lock-in portion 114 in the slot, thus allowing removal of the head from the toothbrush body. Thus, actuation of Jeannet's unlocking button 121 moves its actuator (locking pin 28 and helical spring 52) from one position to another position to facilitate removal of the attachment from the body. Ex. 1008, 1:29-57; 4:6-33. In my opinion, one of ordinary skill in the art would have understood a button added to Hoblingre's ring 18 in view of Jeannet's teaching of button 121 would similarly move ring 18 (the actuator) from its first position (ring 18 toward the open end 10 of socket 8, with the pins 6 trapped between the edges of the slots 12 and 28), to the second position (ring 18 away from the open end 10 of

socket 8 compressing coil spring 24, allowing pins 6 to be removed from between the slots 12 and 28) to facilitate removal of the attachment from the body.

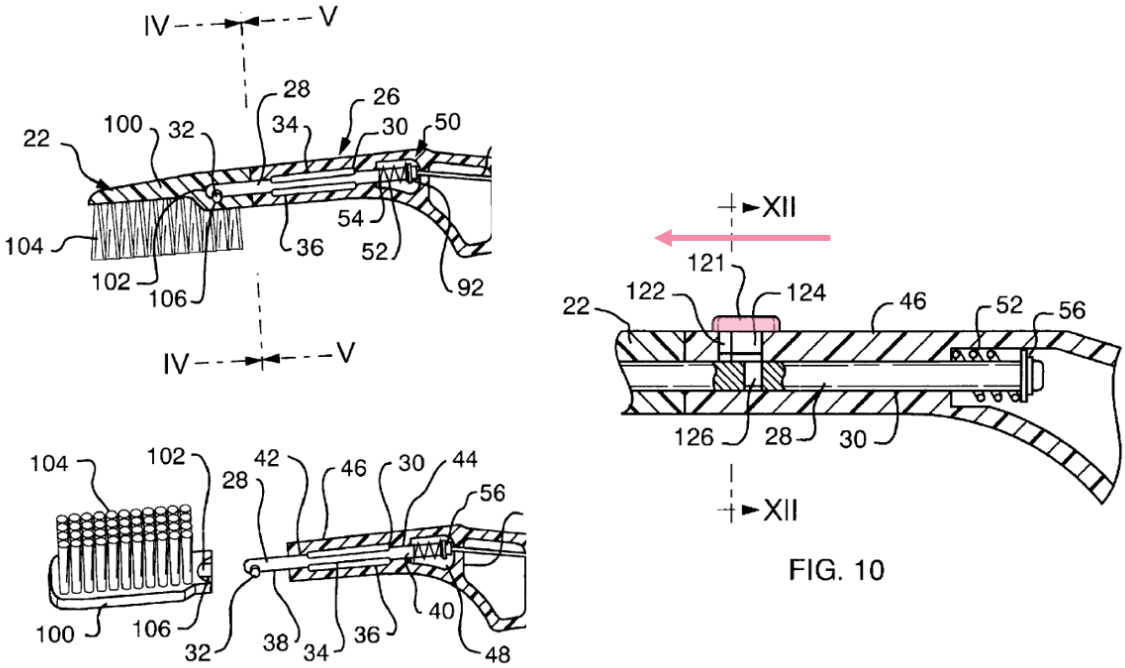

FIG. 10

Ex. 1008, FIG. 1 (left top, excerpt), FIG. 2 (left bottom, excerpt), FIG. 10 (annotated).

160. For the reasons I have discussed above in Section IX.C.1 (incorporated herein by reference), one of ordinary skill would have been motivated to combine Hoblingre, Maclaine, and Jeannet, and would have had a reasonable expectation of success in making the combination. Thus, in my opinion, the combination of Hoblingre, Maclaine, and Jeannet renders claim 34 obvious.

D. Ground 4: Mouhot Anticipates Claims 1-9, 15, 23, 24, and 32

161. It is my opinion that Mouhot discloses to one of ordinary skill in the art each and every element of claims 1-9, 15, 23, 24, and 32 of the ’660 Patent. In

particular, it is my opinion that Mouhot discloses each and every element of claims 1-9, 15, 23, 24, and 32 and anticipates those claims.

1. Independent Claim 1

162. It is my opinion that limitations of claim 1 are anticipated and/or rendered obvious by Mouhot.

[1pre] A handheld appliance

163. As I have discussed above with respect to Section IX.A.1 (incorporated herein by reference), I understand that a preamble typically does not limit a claim. Specifically, I am informed that a preamble to a claim is not limiting where it merely states the purpose or intended use of the invention. Here, preamble [1pre] merely states that the purpose or intended use of the "appliance" is "handheld." Thus, it is my opinion that the preamble is not limiting.

164. Further, I am informed that where the body of the claim describes a structurally complete invention such that deletion of the preamble phrase does not affect the structure, that the preamble is not limiting. Here, deletion of the preamble phrase "handheld" does not affect the structure of the claimed "appliance." Without the "handheld" purpose or intended use, the preamble merely recites an "appliance," which is a generic term. For this additional reason, it is my opinion that the preamble is not limiting.

165. I also note that the dependent claims do not repeat the preamble phrase "handheld." In my opinion, a person of ordinary skill in the art would have recognized that the preamble phrase "handheld" was not intended to be limiting given the fact that it is not repeated in the dependent claims.

166. Without the "handheld" preamble phrase, Element 1[pre] recites "[a]n appliance," a generic term signaling an apparatus claim. Mouhot discloses a "quick coupler of the bayonet type" for connecting two components of a system—i.e., an appliance. Ex. 1005, [0001]. Although Mouhot contemplates that its quick coupler is particularly useful "in the automotive industry, for connecting two steering members," it explicitly states that "such a coupler can find numerous applications." Ex. 1005, [0029]. In my opinion, as supported by the following discussion, the claims do not limit the invention from direct application to a hand held appliance in general, or a hair care appliance in particular. Additionally, it would have been obvious to use the attachment system of Mouhot in a handheld appliance. Accordingly, if the preamble is found to be limiting, then it is my opinion that the claims would have been obvious to one of ordinary skill in the art as set forth in Grounds 2 and 3.

[1a] "having a body and an attachment"

167. It is my opinion that Mouhot discloses this limitation.

168. Mouhot's quick coupler connects two components: (1) a first component comprising socket 2 and locking means 4, illustrated below in blue and (2) a second component comprising shank 3, illustrated below in red. Ex. 1005, [0010]-[0011].

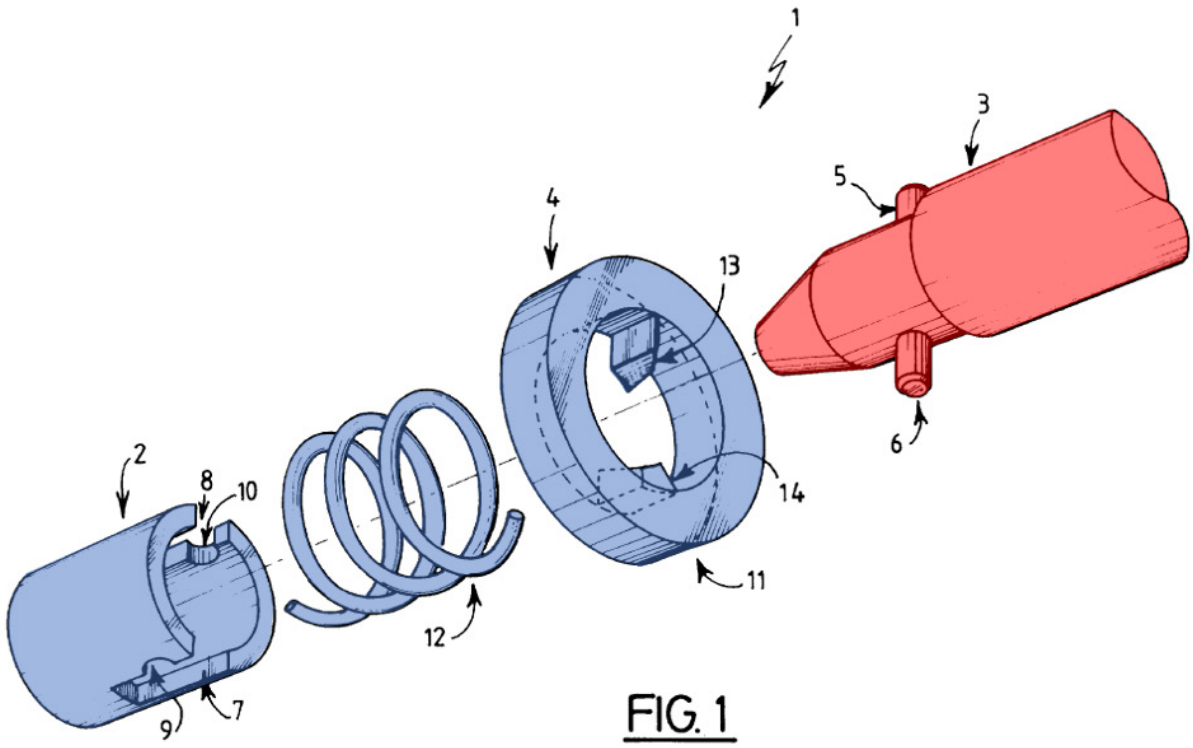

Ex. 1005, FIG. 1 (annotated).

169. Mouhot's component comprising socket 2, which receives shank 3, and locking means 4 "for locking" "shank 3 in position," discloses a body. Ex. 1005, [0011]. Mouhot's component comprising a shank 3, which is inserted into and then locked in position within socket 2 by locking means 4, discloses an attachment. Ex. 1005, [0011]. As shown in Figure 1, in my opinion, the conical end of shank 3 facilitates the entry and centering of shank 3 in socket 2.

[1b]	**"the body comprising an attachment mechanism having a first slot and an actuator"**

170. It is my opinion that Mouhot discloses this limitation.

171. As I have explained above, Mouhot's component comprising socket 2 and locking means 4 together disclose a body. More specifically, socket 2 and locking means 4 together disclose an attachment mechanism.

172. Socket 2 includes slots 7 and 8, the boundaries of which are "delimit[ed]" by the sides of socket 2. Ex. 1005, [0007], [0013]. One of the slots, slot 7, is illustrated in a side view of Mouhot's appliance below in blue. The edges of socket 2 that define slots 7 and 8 also define "lateral recess[es]" "stop means" 9 and 10 that extend "lateral[ly]" from the corresponding slots 7 and 8. Ex. 1005, [0014]-[0015]. One of the laterally extending stop means, stop means 9, is illustrated below in yellow.

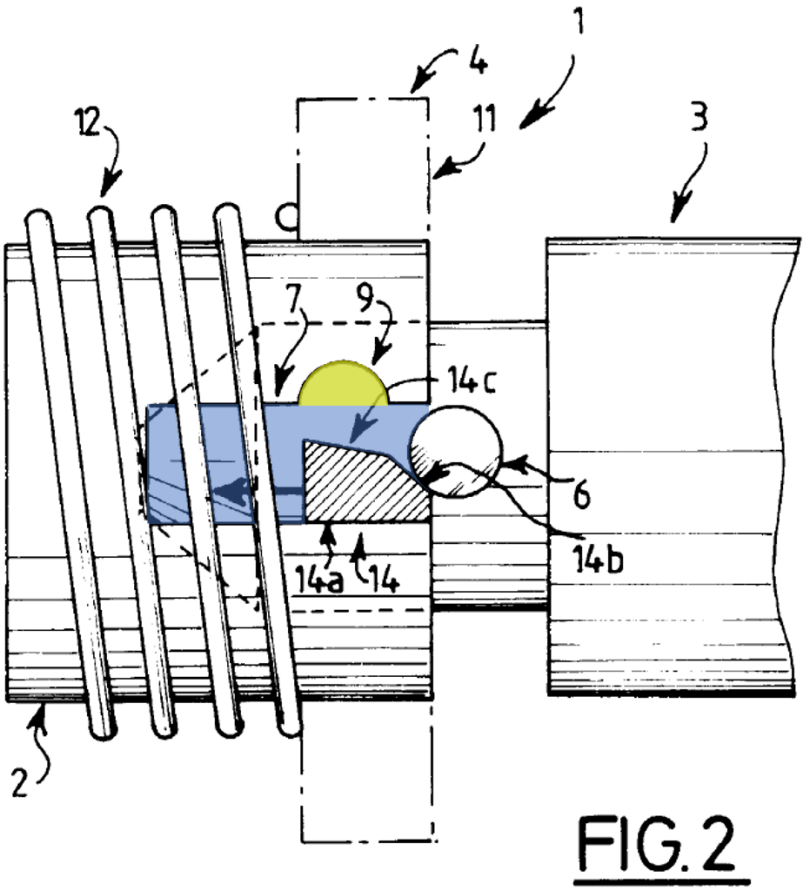

Ex. 1005, FIG. 2 (annotated).

173. Although the side view of Mouhot's quick coupler only illustrates one slot (slot 7 and stop means 9), Mouhot's socket 2 includes at least 2 slots—the combination of slot 7 and stop means 9 on one side, and the combination of slot 8 and stop means 10 on the other side, as illustrated below.

174. Together, slot 7 and corresponding stop means 9, which extends from slot 7, constitute a single "first slot" as illustrated below in green.

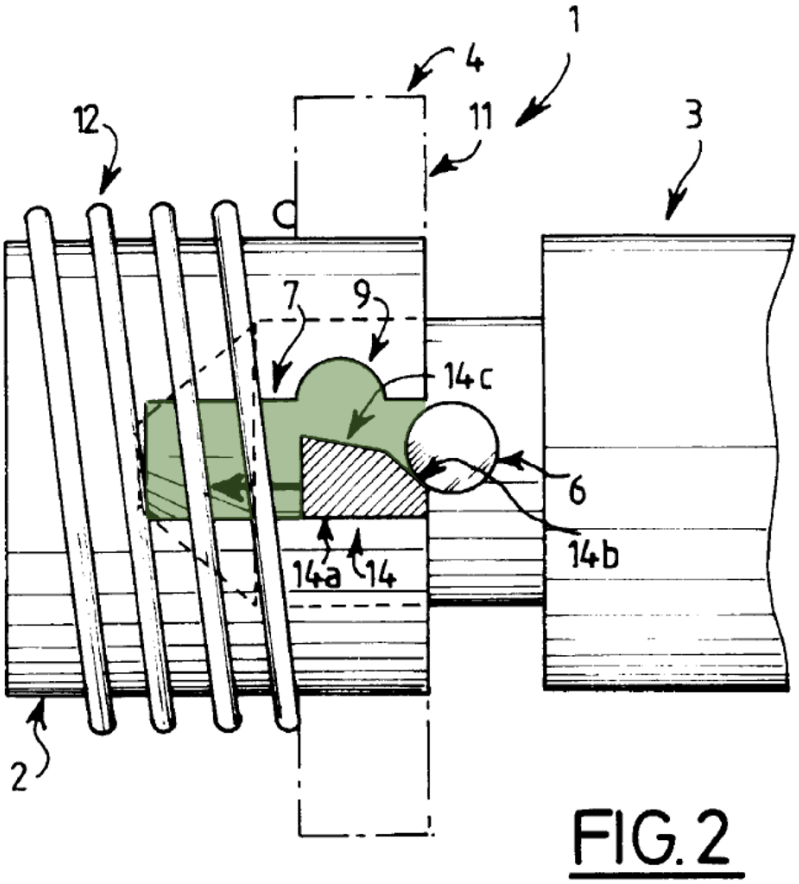

Ex. 1005, FIG. 2 (annotated).

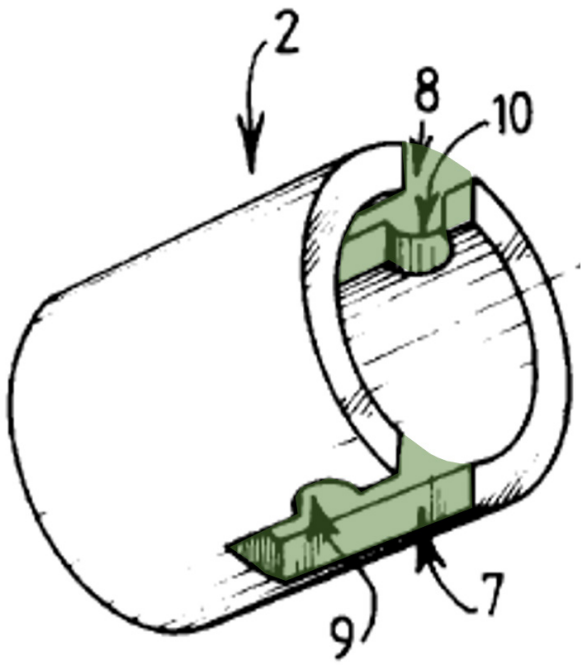

Ex. 1005, FIG. 1 (excerpt, annotated).

175. Although the side view of Mouhot's quick coupler only illustrates one slot (slot 7 and stop means 9), Mouhot's socket 2 includes at least 2 slots—the combination of slot 7 and stop means 9 on one side, and the combination of slot 8 and stop means 10 on the other side, as illustrated below.

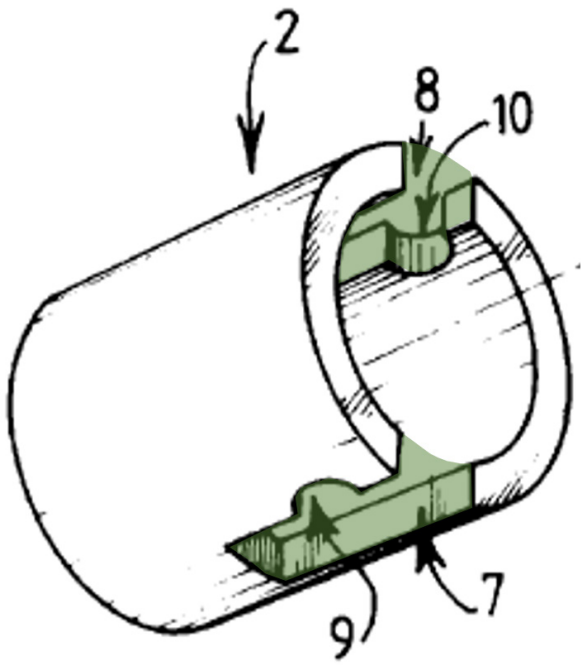

Ex. 1005, FIG. 1 (excerpt, annotated).

176. Mouhot's locking means 4 comprises ring 11, illustrated below in red, and coil spring 12, illustrated below in orange. Ex. 1005, [0016]-[0017]. Coil spring 12 biases ring 11 "towards its locking position," while "wedge-shaped" projections that "protrude radially toward the inside of the ring" and "extend into the slots of the socket." Ex. 1005, [0016]-[0017]. Locking means 4 constitutes an actuator.

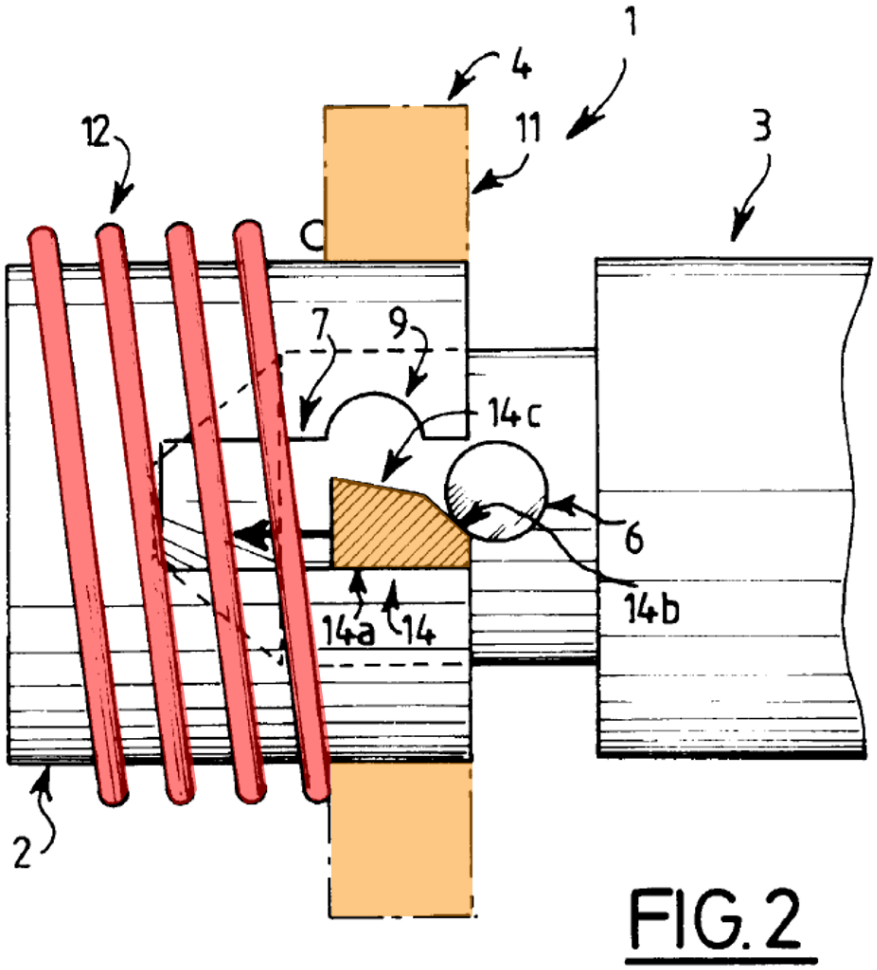

Ex. 1005, FIG. 2 (annotated).

[1c]	**"the attachment comprising a first protrusion configured to engage with the first slot"**

177. It is my opinion that Mouhot discloses this limitation.

178. As I have explained above, Mouhot's component comprising shank 3 discloses an attachment. Shank 3 comprises "two diametrically opposite protruding parts, 5 and 6," which are "adapted to be inserted into two corresponding slots 7, 8" and the corresponding stop means 9, 10 of socket 2. Ex. 1005, [0012]-[0015], [0019].

These laterally protruding parts, or protrusions, 5 and 6, are illustrated below in purple.

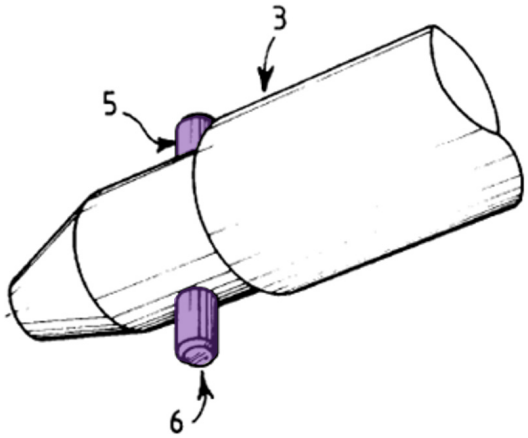

Ex. 1005, FIG. 1 (excerpt, annotated).

179. At least one locked position of protrusions 5, 6 is "delimit[ed]" by the corresponding stop means 9, 10. As I have explained above, the combination of Mouhot's slot 7 and stop means 9 constitutes a first slot. Thus, lateral protruding part 6, which engages with the first slot comprising the combination of slot 7 and stop means 9 (illustrated below in green), constitutes a first protrusion.

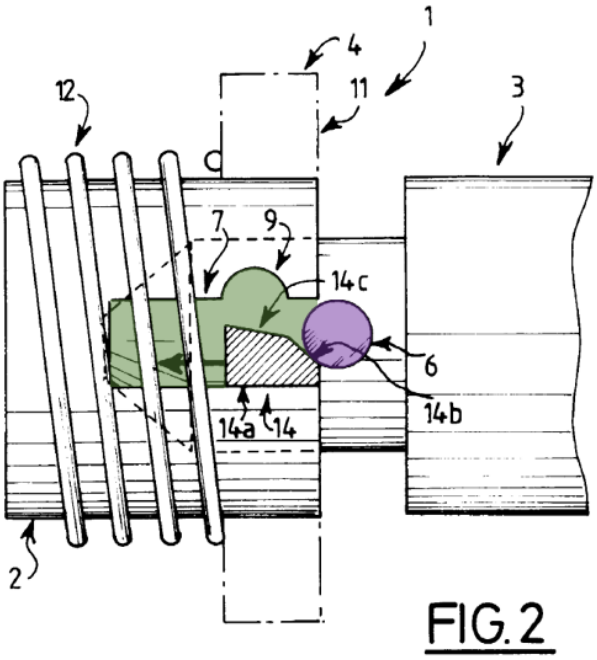

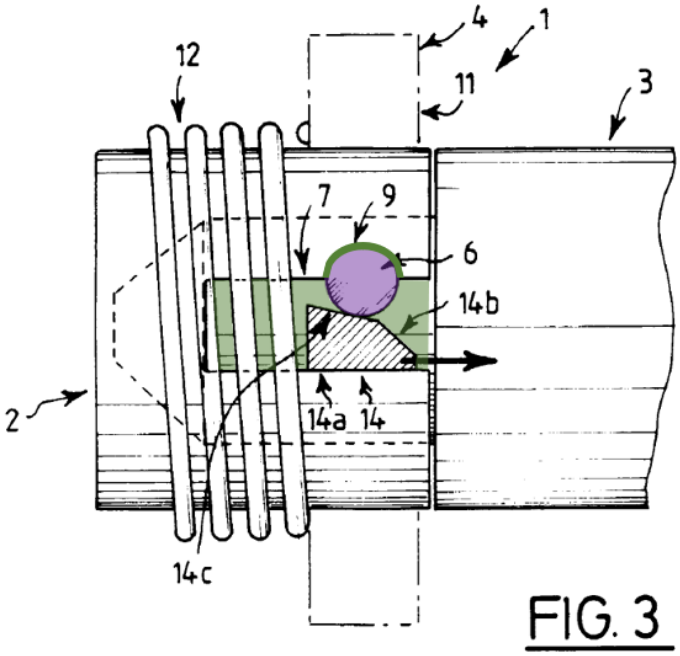

Ex. 1005, FIGS. 2, 3 (annotated).

[1d] "wherein the actuator has a first position and a second position and the actuator is slidably moved from the first position towards the second position in a longitudinal direction of the body as the first protrusion engages with the first slot"

180. It is my opinion that Mouhot discloses this limitation.

181. As I have explained above, Mouhot's locking means 4 discloses an actuator. Mouhot discloses that locking means 4 is slidable (*i.e.*, in a longitudinal direction of the body illustrated below in red) between a first position (*i.e.*, ring 11 positioned at the end of socket 2 farthest from coil spring 12) as shown in Figure 2 and a second position (*i.e.*, ring 11 compressing coil spring 12). Ex. 1005, [0019]-[0021].

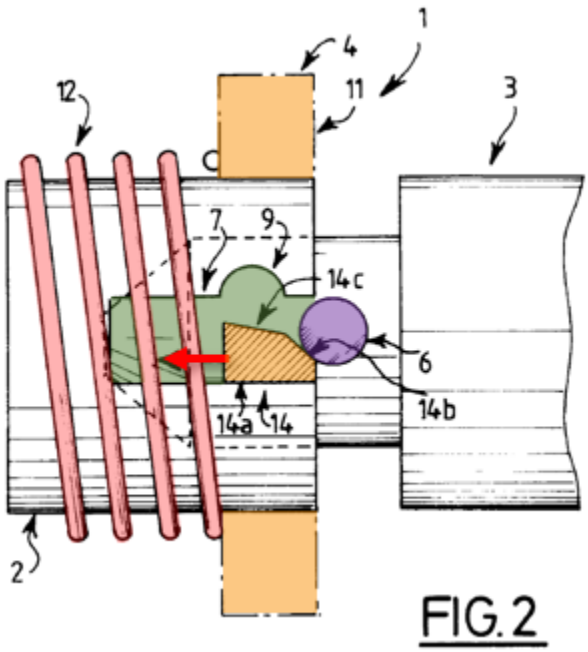

Ex. 1005, FIGS. 2, 3 (annotated).

182. When moving from the first position illustrated above in Figure 2 to the second position, ring 11 slides along a longitudinal direction of socket 2 (illustrated above by the red arrow in Figure 2), compressing coil spring 12. As ring 11 compresses coil spring 12 and continues sliding along the longitudinal direction, lateral protruding part 6, illustrated above in purple, enters the first slot, illustrated above in green, comprising the combination of slot 7 and stop means 9. Ex. 1005, [0013]-[0014].

[1e] "wherein the body extends along a longitudinal axis and the first slot extends both radially around and axially along the body."

183. As I have explained above, Mouhot's socket 2 and locking means 4 together constitute a body. As shown below in annotated Figures 1-3, Mouhot's socket 2 extends along a longitudinal axis illustrated in pink. Slots 7, 8 also extend along a longitudinal axis (and thus, axially) along socket 2, as illustrated below in pink. Ex. 1005, [0013]-[0015]. For example, Mouhot describes these slots as "axial slots." Ex. 1005, [0014]. Stop means 9, 10 extend "lateral[ly]" from slots 7, 8 (and thus extend radially) around socket 2, as illustrated below in yellow. Ex. 1005, [0013]-[0015].

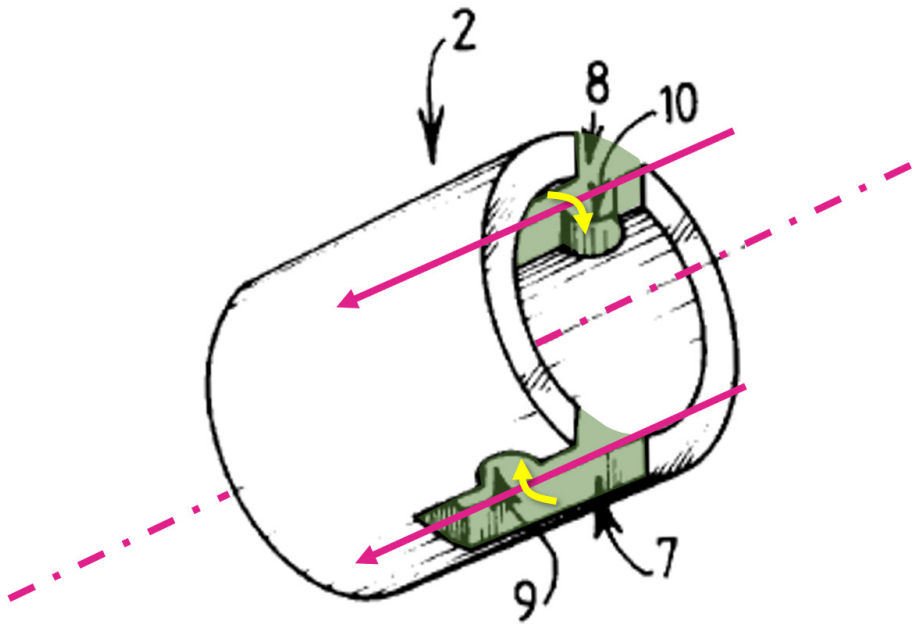

Ex. 1005, FIG. 1 (excerpt, annotated).

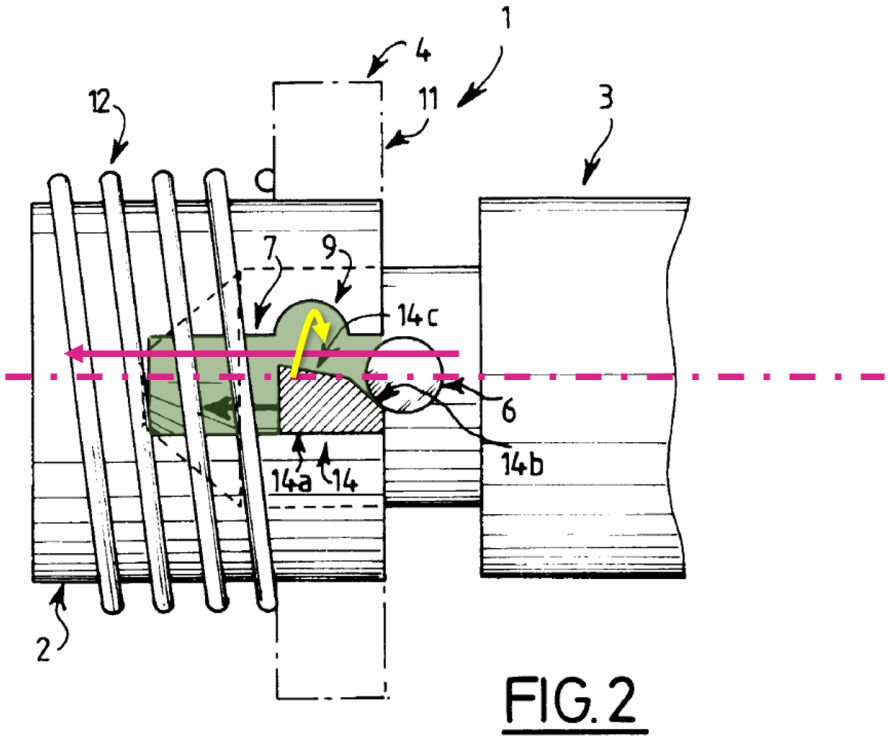

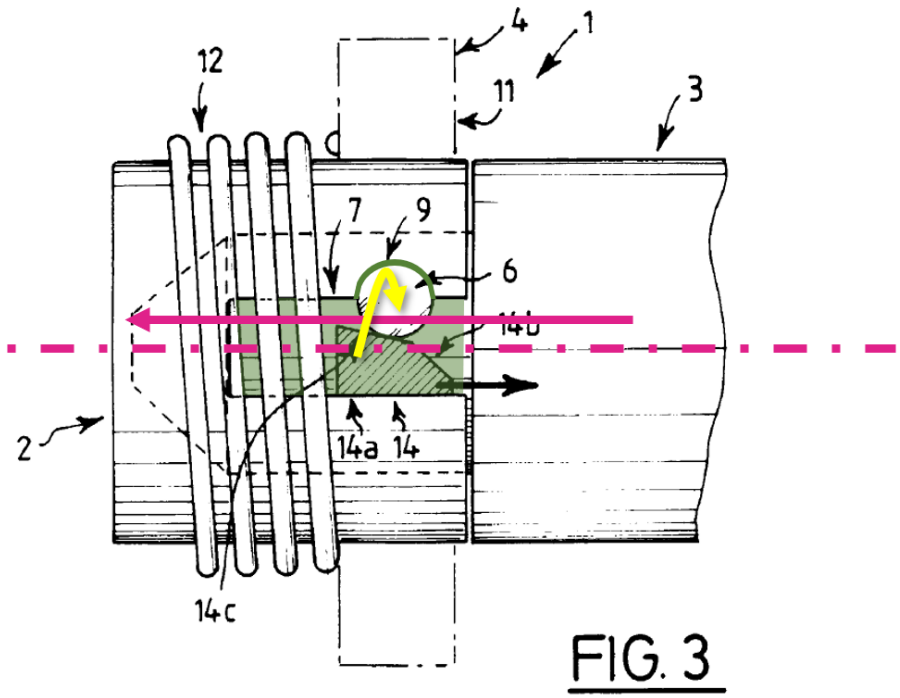

Ex. 1005, FIGS. 2, 3 (annotated).

184. Thus, Mouhot discloses each element of claim 1 and anticipates claim 1.

2. Dependent Claim 2

185. It is my opinion that Mouhot discloses or renders obvious the elements of this claim.

[2]	**"The appliance of claim 1, wherein in the first position, the actuator at least partially obscures the first slot."**

186. It is my opinion that the limitation is disclosed by Mouhot. As I have explained above, Mouhot's locking means 4 constitutes an actuator. Mouhot discloses that wedge-shaped means 13, 14 of ring 11, partially obscures the slots

comprising the combination of slots 7, 8 and stop means 9, 10. Ex. 1005, [0017]-[0021]. As illustrated in Figure 2 below, with respect to the first slot (the combination of slot 7 and stop means 9, illustrated in green) and the first protrusion (lateral protruding part 6, illustrated in purple), a portion of the actuator (wedge-shaped means 14, illustrated in orange) of ring 11 partially obscures the first slot when the actuator is in the first position (ring 11 positioned at the end of socket 2 farthest from coil spring 12). Ex. 1005, [0017]-[0021]. The first protrusion cannot enter the first slot without interacting with wedge-shaped means 14. Ex. 1005, [0017]-[0021].

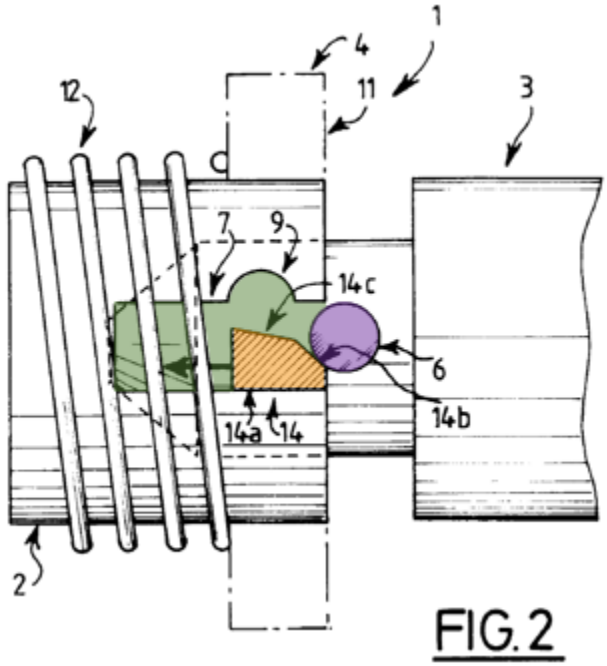

Ex. 1005, FIG. 2 (annotated).

3. Dependent Claim 3

187. It is my opinion that Mouhot discloses or renders obvious the elements of this claim.

[3]	**"The appliance of claim 1, wherein the actuator comprises a surface which interacts with the first protrusion when the first protrusion engages with the first slot."**

188. It is my opinion that the limitation is disclosed by Mouhot.

189. As I have explained above, Mouhot's locking means 4 constitutes an actuator. Mouhot discloses that wedge-shaped means 13, 14 of ring 11, each comprise a surface that interacts with protrusions 5, 6 when the protrusions engage with the slots comprising the combination of slots 7, 8 and stop means 9, 10. Ex. 1005, [0017]-[0021]. As illustrated in Figures 2 and 3 below, with respect to the first slot (the combination of slot 9 and stop means 9, illustrated in green) and the first protrusion (lateral protruding part 6, illustrated in purple), a portion of the actuator (wedge-shaped means 14, illustrated in orange) of ring 11 comprises "first and second sloped surfaces" 14b and 14c, "one being an extension of the other, which are angularly offset relative to each other." Ex. 1005, [0017]-[0021]. Together, surfaces 14b and 14c, which constitute a continuous surface of wedge-shaped means 14, interacts with the first protrusion as it engages the first slot. Ex. 1005, [0017]-[0021]. Mouhot explains that surface "14b enabl[es] movement of the wedge-shaped means 14 toward their second retracted position during insertion of the shank into

the socket, by the corresponding lateral protruding part thereof coming to bear against this surface, and [thereby] guiding this lateral protruding part in the direction of the stop means 9 of the corresponding side of the slot, and the second one [surface] 14c enabling this laterally protruding part of the shank to be locked in position in these stop means of the socket." Ex. 1005, [0017]-[0021].

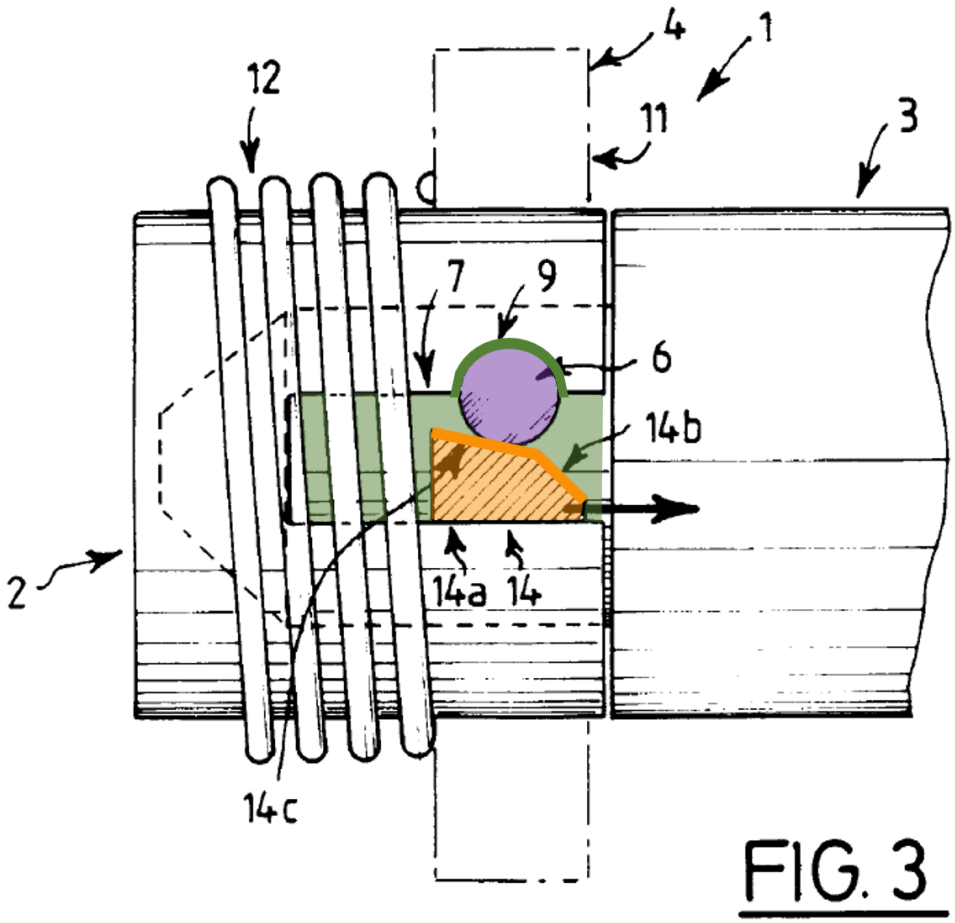

Ex. 1005, FIG. 3 (annotated).

4. Dependent Claim 4

190. It is my opinion that Mouhot discloses or renders obvious the elements of this claim.

[4]	**"The appliance of claim 3, wherein the surface is configured to at least partially define the first slot at or near the second position."**

191. It is my opinion that the limitation is disclosed by Mouhot.

192. As I have explained above, Mouhot discloses that the first protrusion (lateral protruding part 6) engages with the first slot (the combination of slot 7 and stop means 9) while in the position shown in Figure 3. In this position, which is at or near the second position (ring 11 compressing coil spring 12), the continuous surface comprising sloped surfaces 14b and 14c both obscures a portion of the first slot and interacts with lateral protruding part 6. Thus, the continuous surface sloped surface of wedge-shaped means 14 that includes sloped surfaces 14b and 14c effectively forms the lower wall of the first slot, and at least partially defines the first slot, as illustrated below in bold lines. Ex. 1005, [0017]-[0021].

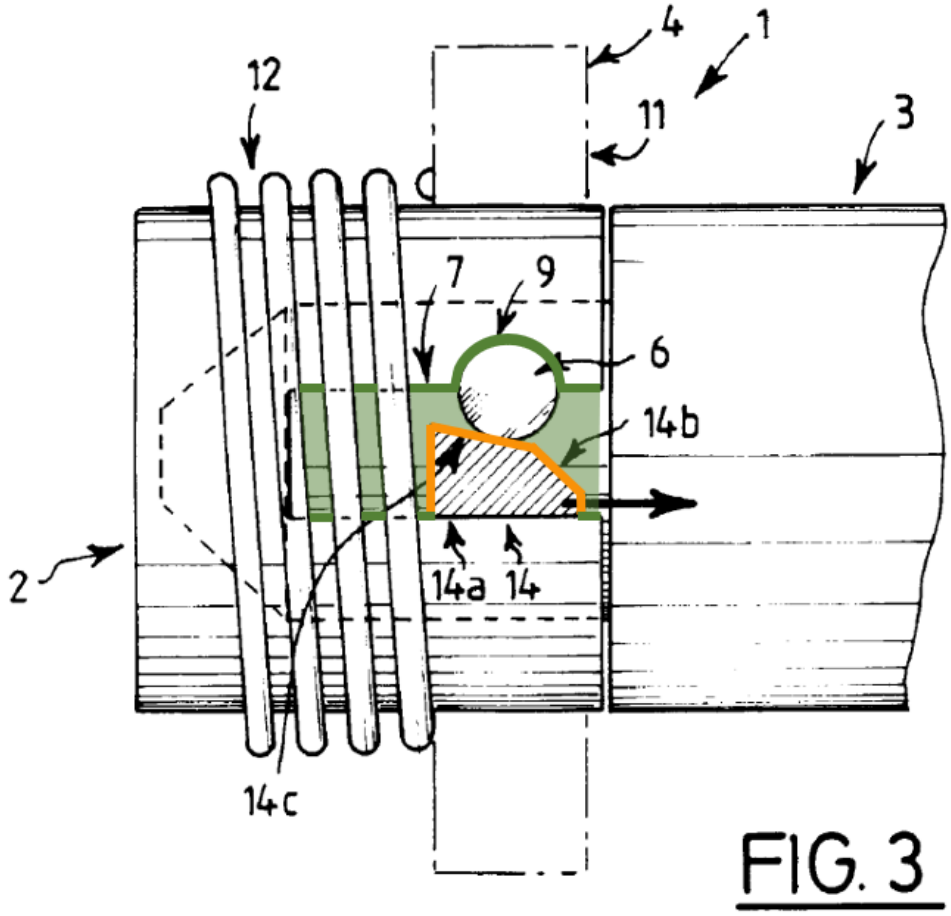

Ex. 1005, FIG. 3 (annotated).

5. Dependent Claim 5

193. It is my opinion that Mouhot discloses or renders obvious the elements of this claim.

[5]	**"The appliance of claim 3, wherein the first protrusion comprises a first face for engagement with the actuator."**

194. It is my opinion that the limitation is disclosed by Mouhot.

195. As I have explained above, Mouhot discloses that the first protrusion (lateral protruding part 6) engages with a surface (sloped surface 14c) of the actuator

(locking means 4, which comprises ring 11 and coil spring 12) while in the second, locked position shown in Figure 3. Mouhot's first protrusion also engages with a surface (sloped surface 14b) of the actuator while in the first, unlocked position shown in Figure 2. In both of the first position and the second position, Mouhot's first protrusion (lateral protruding part 6) comprises a continuous cylindrical outer wall surface, or face (illustrated in a bold purple line), that engages the actuator (sloped surface 14b as shown in Figure 2 and sloped surface 14c as shown in Figure 3, both illustrated in a bold orange line). Ex. 1005, [0017]-[0021]. Mouhot explains, for example, that sloped surface "14b enable[s] movement of the wedge-shaped means 14 toward [its] second retracted position" when the corresponding laterally protruding part" 6 "com[es] to bear against this surface," and "guid[es] this lateral protruding part [6] in the direction of the stop means 9," while "sloped surface "14c enables the laterally protruding part 6 "to be locked in position in these stop means" 9. Ex. 1005, [0020].

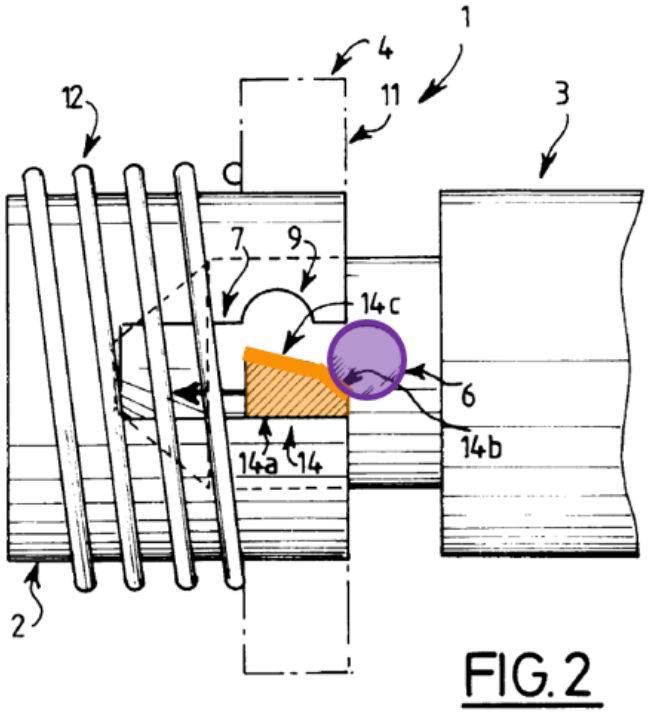

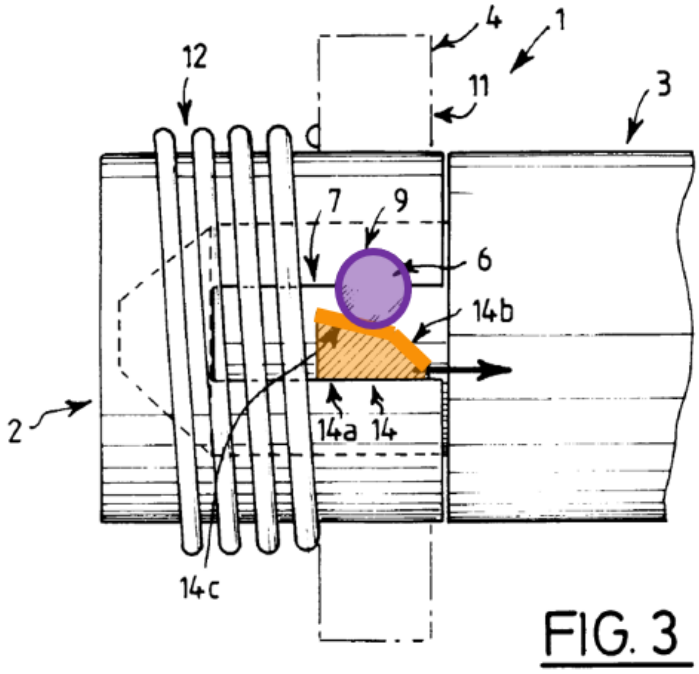

Ex. 1005, FIGS. 2, 3 (annotated).

6. Dependent Claim 6

196. It is my opinion that Mouhot discloses or renders obvious the elements of this claim.

[6]	**"The appliance of claim 5, wherein the first face engages with the surface of the actuator."**

197. It is my opinion that the limitation is disclosed by Mouhot.

198. As I have explained above, Mouhot discloses that the first face (illustrated below in a bold purple line) of the first protrusion (lateral protruding part 6) engages the surface (the continuous surface comprising sloped surfaces 14b and 14c, illustrated below in a bold orange line) of the actuator (locking means 4). Ex. 1005, [0017]-[0021].

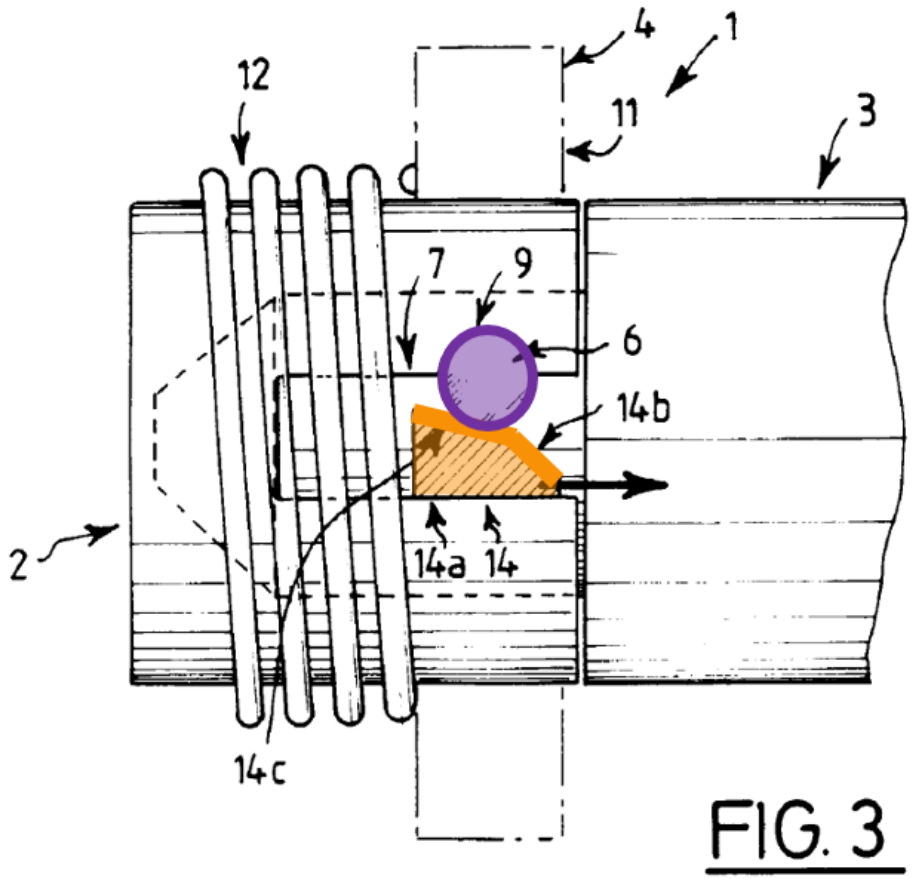

Ex. 1005, FIG. 3 (annotated).

7. Dependent Claim 7

199. It is my opinion that Mouhot discloses or renders obvious the elements of this claim.

[7]	**"The appliance of claim 1, wherein when the first protrusion is at a predetermined position within the first slot, the actuator returns towards the first position."**

200. It is my opinion that the limitation is disclosed by Mouhot.

201. Mouhot discloses that when its first protrusion (lateral protruding part 6) is fully within stop means 9, the coil spring 12 pushes back "the ring and the

wedge-shaped means" 14 so that "sloped surface 14c" engages "the corresponding lateral protruding part" 6 and stop means 9 "to ensure that the shank is locked in position inside the socket" by preventing lateral protruding part 6 "from disengaging" the stop means. Ex. 1005, [0024]. Thus, when the first protrusion (lateral protruding part 6) is at a predetermined position (i.e., sufficiently engaged with stop means 9), the actuator (locking means 4) returns toward the first position.

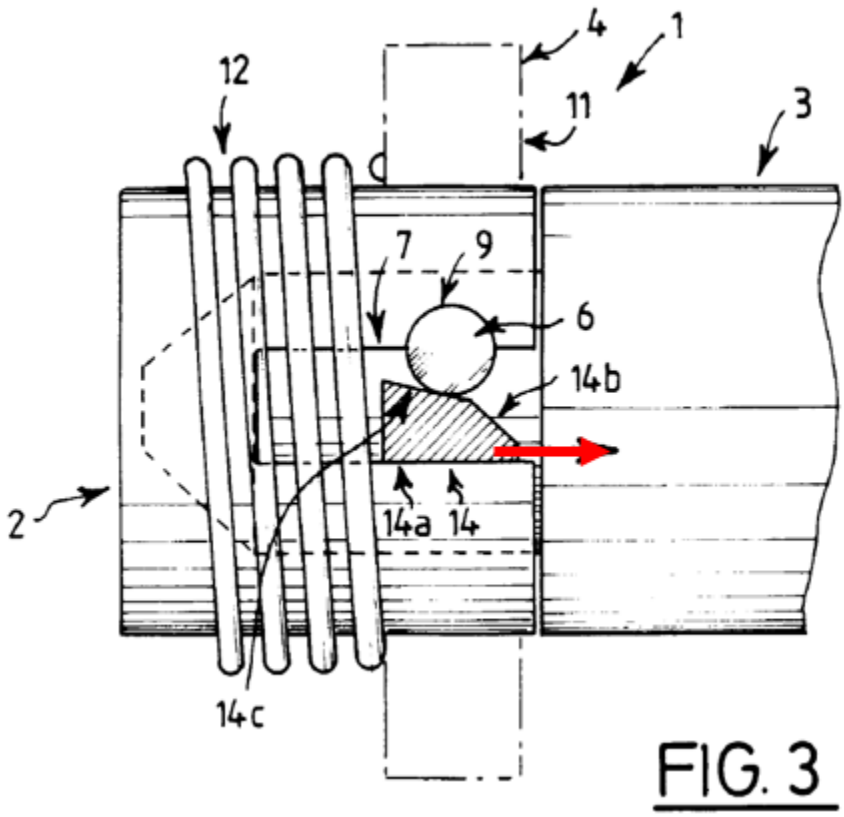

Ex. 1005, FIG. 3 (annotated).

202. Alternatively, when Mouhot's first protrusion is "not sufficient[ly]" engaged with the stop means and/or the sloped surfaces, the actuator ("ring [11] and wedge-shaped means [14], under the action of" coil spring 12) "causes the

attachment, "this shank[,] to be ejected" from the body, "the socket, so as to prevent any incorrect locking position." Ex. 1005, [0024]-[0025]. Thus, when the first protrusion (lateral protruding part 6) is at a predetermined position (i.e., any position in which it is not sufficiently engaged with stop means 9), the actuator (locking means 4) also returns toward the first position.

8. Dependent Claim 8

203. It is my opinion that Mouhot discloses or renders obvious the elements of this claim.

[8]	**"The appliance of claim 7, wherein the actuator retains the attachment on the body."**

204. It is my opinion that the limitation is disclosed by Mouhot.

205. As I have explained, Mouhot discloses that its actuator (locking means 4) "prevent[s] the lateral protruding part of the shank from disengaging from the stop means of the slot of the socket" Ex. 1005, [0007], and "connect[s] two members" by retaining the attachment (component comprising shank 3) on the body (component comprising socket 2), Ex. 1005, [0002], [0010].

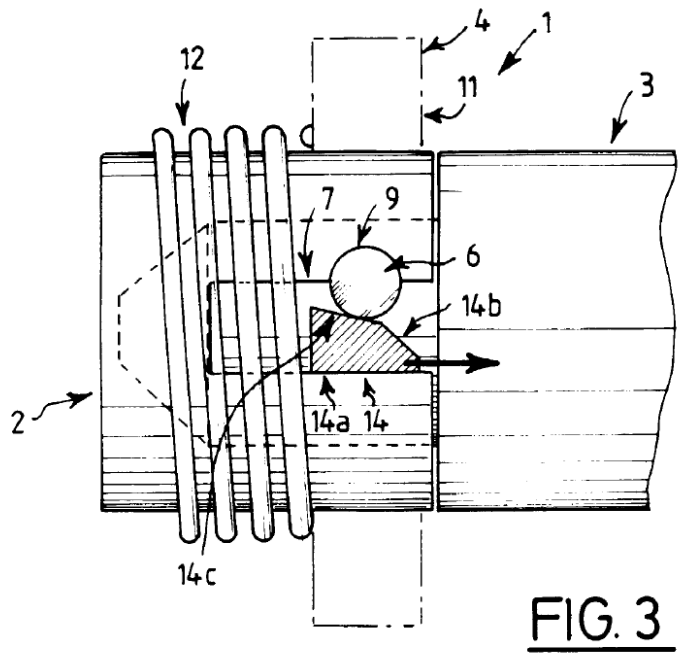

Ex. 1005, FIG. 3.

9. Dependent Claim 9

206. It is my opinion that Mouhot discloses or renders obvious the elements of this claim.

[9]	**"The appliance of claim 1, wherein the actuator is biased into the first position."**

207. It is my opinion that the limitation is disclosed by Mouhot.

208. As I have explained previously, Mouhot discloses that its actuator (locking means 4) is biased into the first position, as shown in Figure 2, by the force of coil spring 12. Ex. 1005, [0018]-[0022].

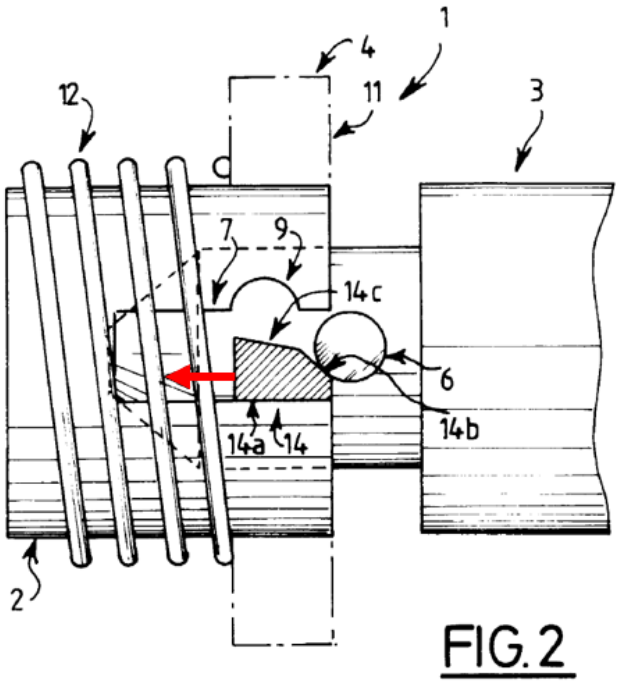

FIG. 2

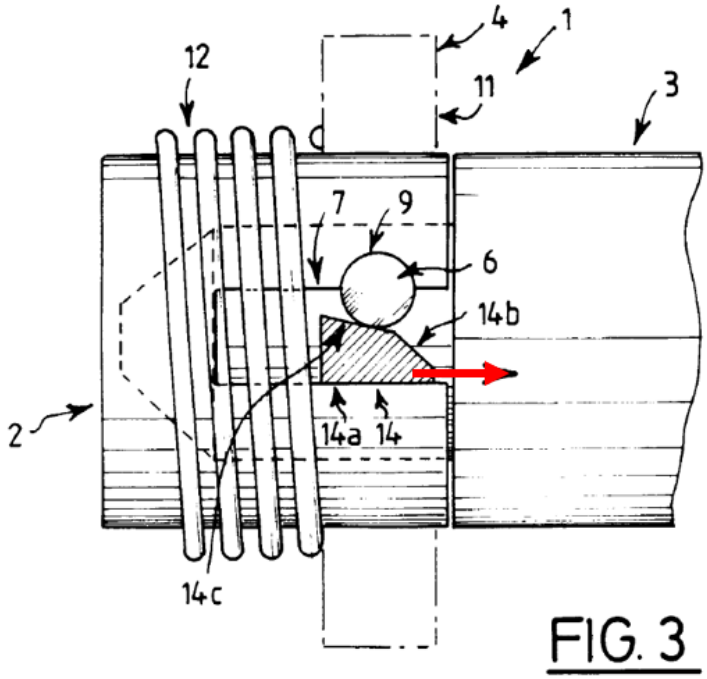

FIG. 3

Ex. 1005, FIGS. 2, 3 (annotated).

10. Dependent Claim 15

209. It is my opinion that Mouhot discloses or renders obvious the elements of this claim.

[15]	**"The appliance of claim 1, wherein the body has a first end and a second end and the attachment mechanism is adjacent the second end."**

210. It is my opinion that the limitation is disclosed by Mouhot.

211. As I have previously explained, Mouhot's component comprising socket 2 and locking means 4 constitutes a body. A first end of the component comprising socket 2 and locking means 4 is not shown and extends toward the left side of socket 2 in Figures 2 and 3 indicated by blue arrows. A second end of the component comprising socket 2 and locking means 4 is shown in Mouhot's Figures 2 and 3 (e.g., the right side of socket 2 at the opening of the first slot (the combination of slot 7 and stop means 9) indicated by red arrows). As illustrated in Figures 2 and 3, locking means 4 is adjacent to the second end. Ex. 1005, [0010]-[0013].

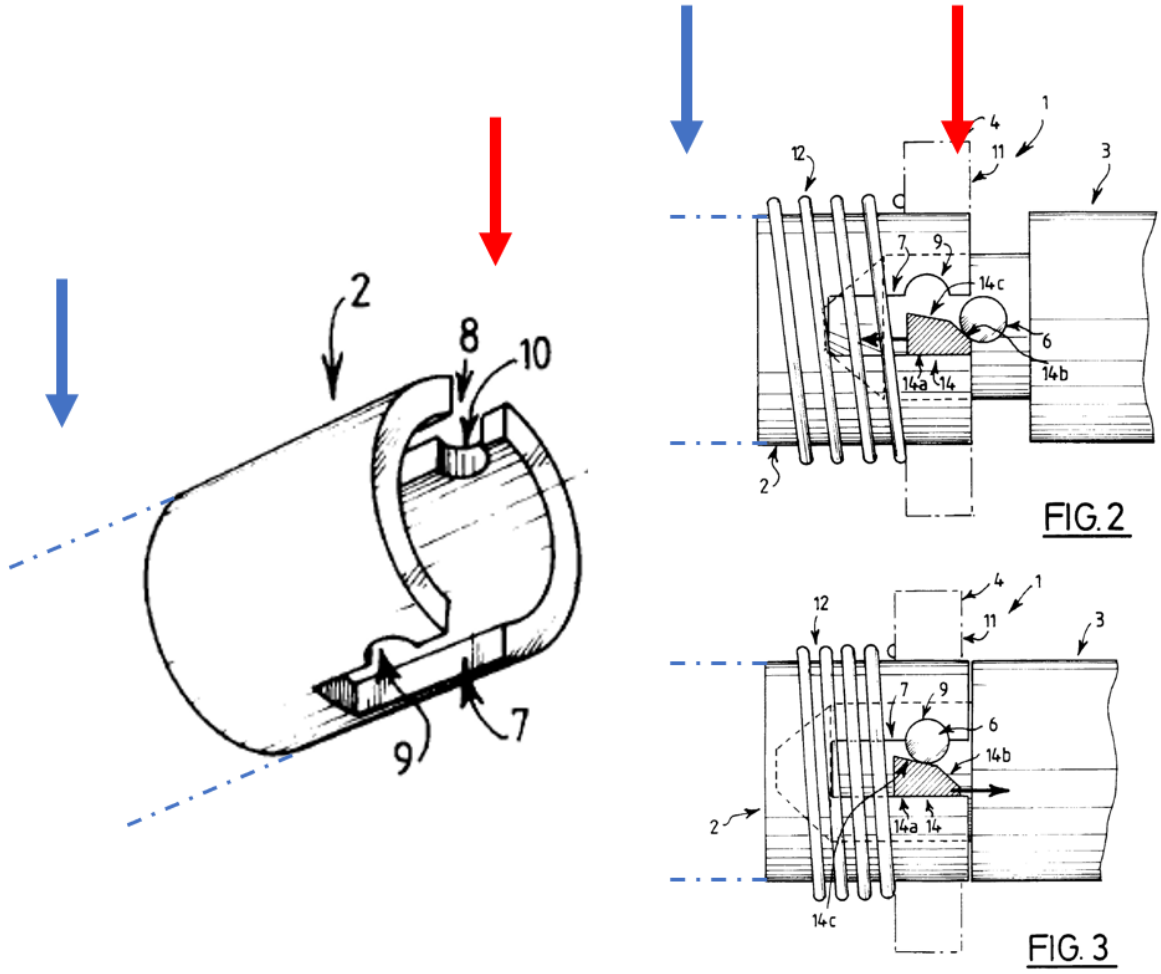

Ex. 1005, FIGS. 1, (left, excerpt, annotated) 2 and 3 (right, annotated).

11. Dependent Claim 23

212. It is my opinion that Mouhot discloses or renders obvious the elements of this claim.

[23]	**"The appliance of claim 1, comprising a second protrusion and a second slot."**

213. It is my opinion that the limitation is disclosed by Mouhot.

214. As I have explained above, Mouhot discloses two slots, 7 and 8, and two stop means, 9 and 10. Due to the side view perspective of Mouhot's figures, the

discussion herein has focused on the first slot—the combination of slot 7 and stop means 9—and the first protrusion—lateral protruding part 6. Although not illustrated in its figures, Mouhot explicitly discloses a second slot (illustrated below in green)—the combination of slot 8 and stop means 10—that is "diametrically opposite" the first slot and corresponds to a second protrusion (illustrated below in purple)—lateral protruding part 5—which is "diametrically opposite" the first protrusion. Ex. 1005, [0011]-[0015].

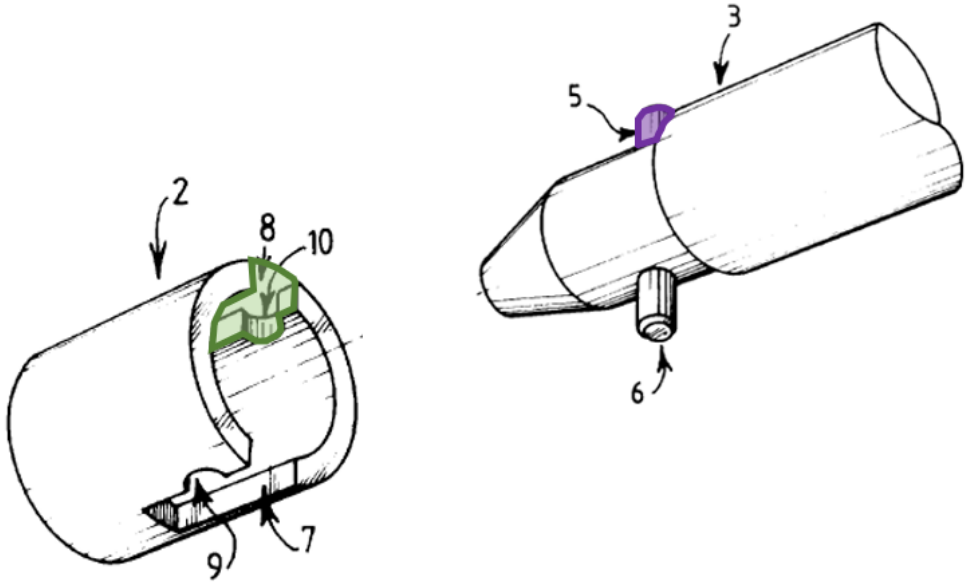

Ex. 1005, FIG. 1 (excerpt, annotated).

12. Dependent Claim 24

215. It is my opinion that Mouhot discloses or renders obvious the elements of this claim.

[24] "The appliance of claim 23, wherein the second protrusion and second slot are radially spaced from the first protrusion and the first slot."

216. It is my opinion that the limitation is disclosed by Mouhot.

217. As I have explained previously, Mouhot's first slot (the combination of slot 7 and stop means 9) and second slot (the combination of slot 8 and stop means 10) are "diametrically opposite" each other, as are Mouhot's first protrusion (lateral protruding part 6) and second protrusion (lateral protruding part 5). Ex. 1005, [0011]-[0015]. Thus, the second slot and second protrusion are radially spaced from the first slot and first protrusion.

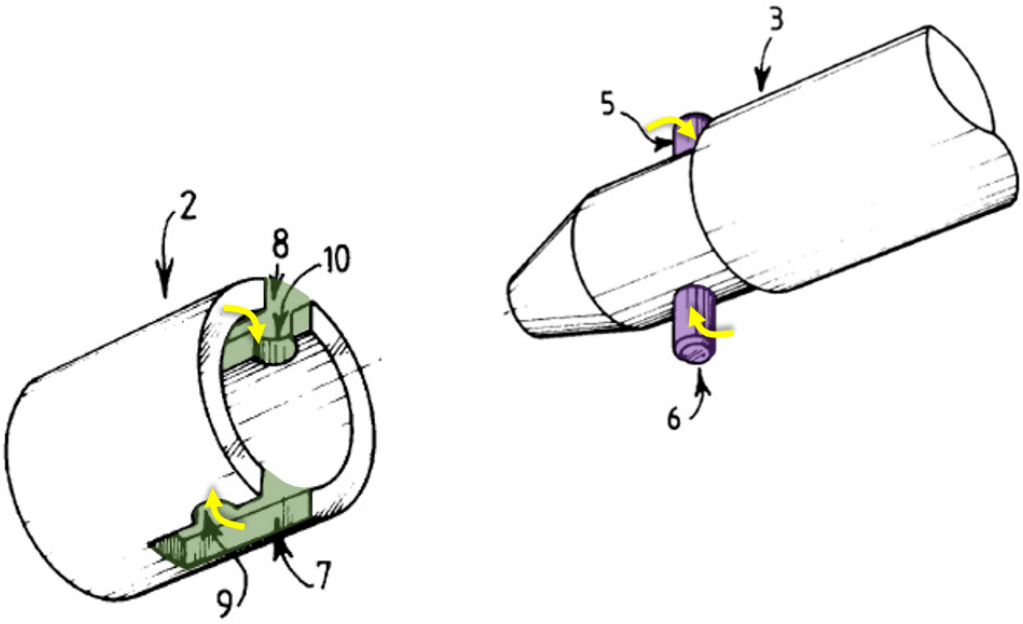

Ex. 1005, FIG. 1 (excerpt, annotated).

13. Dependent Claim 32

218. It is my opinion that Mouhot discloses or renders obvious the elements of this claim.

[32] "The appliance of claim 1, wherein the first slot causes the attachment to pivot relative to the body as the first protrusion engages with the first slot."

219. It is my opinion that the limitation is disclosed by Mouhot. Specifically, because Mouhot's first slot, comprising slot 7 and stop means 9, includes a portion (stop means 9) extending laterally, this portion causes the attachment (component comprising shank 3) to pivot (i.e., rotate about its longitudinal axis) relative to the body (component comprising socket 2 and locking means 4) as the lateral protruding part 6 is locked into place by engaging slot 7 and then stop means 9 of the first slot. Ex. 1005, [0015] ("the stop means…consist of a lateral recess 9 and 10 of each corresponding edge of the socket.").

E. Ground 5: Mouhot in View of Maclaine Renders Obvious Claims 1-9, 15, 18, 23, 24, and 30-32

220. Maclaine discloses a handheld hair care appliance having a body and various attachments that mate with corresponding protrusions on a collar of a head via a "twist lock joint." Ex. 1007, [0092]. The combination of Mouhot and Maclaine renders obvious claims 18, 30, and 31 of the '660 patent. To the extent that the preamble of claim 1 is determined to be limiting, the combination of Mouhot and

Maclaine additionally renders obvious claims 1-9, 15, 23, 24, and 32. I incorporate by reference my analysis with respect to Ground 4 above. *See* Section IX.D.

1. Motivation to Combine Mouhot and Maclaine

221. In my opinion, one of ordinary skill in the art would have been motivated to combine Mouhot and Maclaine to achieve the claimed invention. Specifically, one of ordinary skill in the art would have found it obvious that Mouhot's appliance could be a handheld appliance, and that Mouhot's improved bayonet attachment mechanism could be used in a handheld hair care appliance as taught in Maclaine. One of ordinary skill in the art would have been motivated to implement Mouhot's "extremely simple, reliable and easy to manufacture," Ex. 1005, [0028], coupling mechanism that provides "quick" coupling and decoupling in a handheld hair care appliance as taught by Maclaine. Ex. 1005, [0001]-[0009]. Maclaine discloses a variety of "heads" or attachments that are interchangeable and can be attached to a hair care appliance body. Each of the multiple attachments performs different functions, and a user of the hair care appliance would have been likely to use multiple attachments—for example, first to detangle and dry, and then to curl and style—and would have wanted to switch attachments out quickly and efficiently. Thus, one of ordinary skill in the art reviewing the hair care appliance system of Maclaine would have found implementing an easy and efficient

attachment mechanism in a handheld hair care appliance as taught by Maclaine desirable and would have been motivated to do so.

222. One of ordinary skill in the art would have understood that there were a variety of known twist lock mechanisms, including the mechanism discussed in Mouhot. In addition, one of ordinary skill in the art would have understood that implementing Mouhot's bayonet coupling mechanism in a handheld hair care appliance would have achieved Mouhot's stated goal of providing a simple, reliable, and easy to manufacture mechanism while improving the usability of such a hair care appliance when rotated through hair. Ex. 1005, [0028].

223. Mouhot contemplates that its disclosed coupling mechanism can be implemented in "numerous applications," Ex. 1005, [0029], and Maclaine teaches that for its fixing mechanism between the attachment and the body, "it will be apparent to the skilled person that other equally acceptable alternative mechanisms could be used." Ex. 1007, [0092]. Thus, the combination of Mouhot and Maclaine with respect to the attachment mechanism is nothing more than the use of a known technique (a coupling mechanism according to Mouhot) to improve devices (handheld hair care appliances as taught by Maclaine) in the same way to yield predictable results (fast, extremely simple, reliable and easy to manufacture coupler mechanism).

224. Furthermore, it would have been obvious to one of ordinary skill in the art to modify Maclaine to use the attachment assembly disclosed in Mouhot since such a modification is a simple substitution. Maclaine and other prior art references already contemplates the use of a bayonet coupling in various types of handheld appliances. And, couplings and bayonet couplings in particular have been known and employed in many fields for decades as a simple, reliable solution for ensuring the transmission of torque. One of ordinary skill in the art would have had a reasonable expectation of success in implementing a simple substitution of one type of bayonet coupling for another, more robust type of bayonet coupling, to achieve a more secure connection. Therefore, one of ordinary skill in the art would have been motivated to utilize the attachment mechanism of Mouhot in a handheld hair care appliance as taught in Maclaine to provide a more secure, simple connection.

2. Independent Claim 1

225. It is my opinion that limitations of claim 1 are rendered obvious by Mouhot in view of Maclaine.

[1pre] "A handheld appliance"

226. It is my opinion that Mouhot discloses this limitation as I have explained above. *See* Section IX.D.1. To the extent that the preamble is found limiting, it is my opinion that Mouhot in view of Maclaine renders this claim element

obvious. Maclaine discloses a head, or "an attachment," "for a hand held appliance, in particular a hair care appliance such as a hot styling brush." Ex. 1007, [0002].

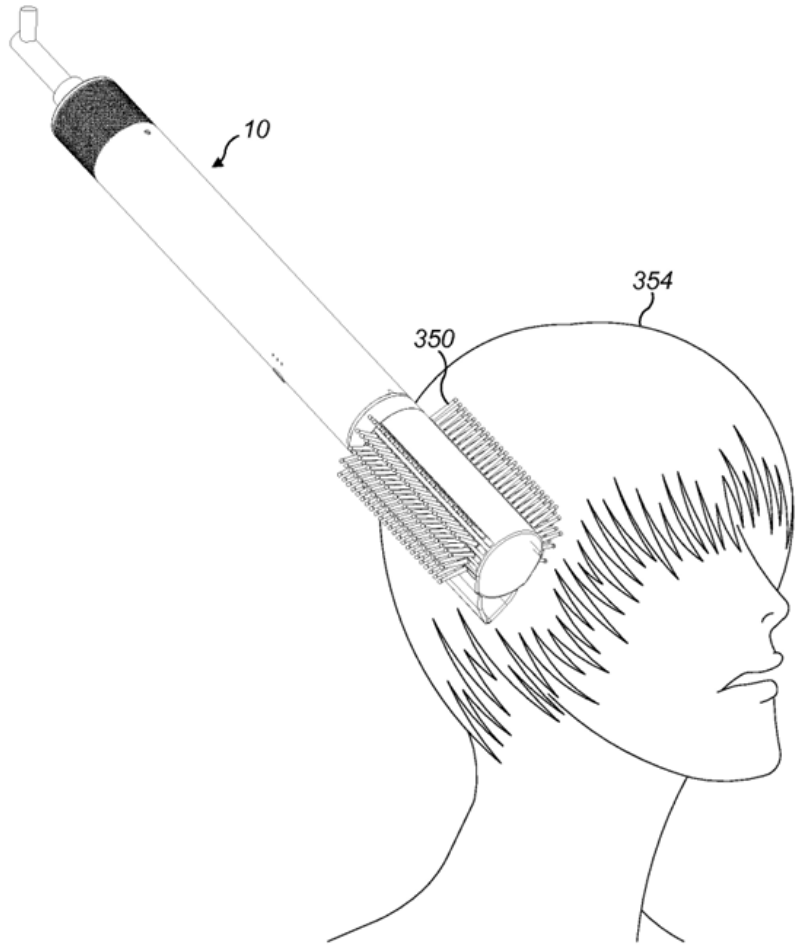

FIG. 14

Ex. 1007, FIG. 1.

3. Dependent Claim 15

[15]	**"The appliance of claim 1, wherein the body has a first end and a second end and the attachment mechanism is adjacent the second end."**

227. It is my opinion that Mouhot discloses this limitation as I have discussed above. *See* Section IX.D.10 which I incorporate here by reference. To the

extent Mouhot does not explicitly disclose this limitation, Mouhot in view of Maclaine renders it obvious.

228. Maclaine teaches that the body of its handheld hair care appliance, handle 20, includes "one end 24," a first end (illustrated by a blue arrow), and a "distal end 22," a second end (illustrated by a red arrow). Ex. 1007, [0046]-[0047]. Maclaine's slot 90 that engages the protrusions on the internal surface of its attachment 30 and those protrusions collectively constitute Maclaine's "twist lock joint" and are located at the "distal end 22" of the body of Maclaine's handheld hair care appliance. Ex. 1007, [0046]-[0047].

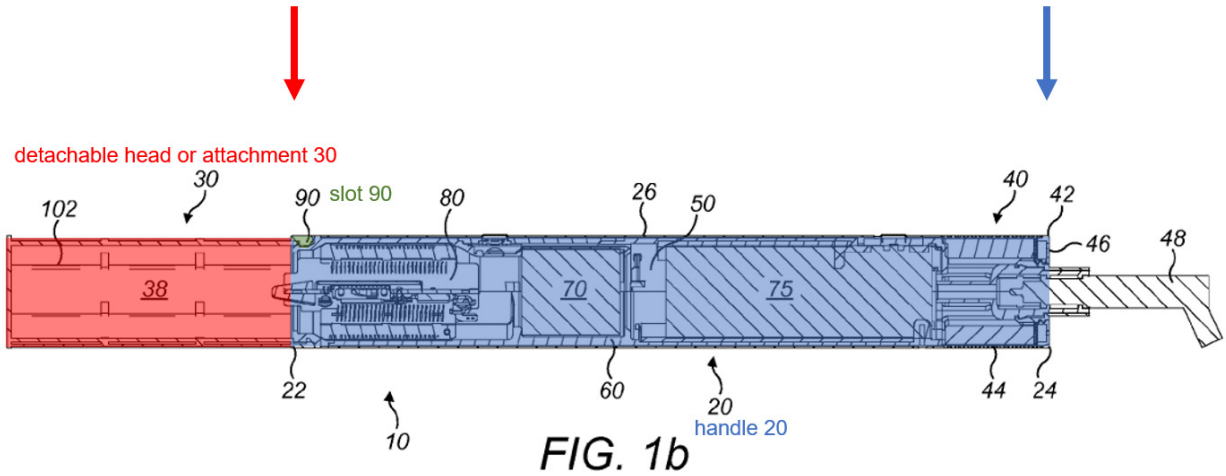

Ex. 1007, FIG. 1b (annotated).

4. Dependent Claim 18

[18]	**"The appliance of claim 1, wherein the attachment comprises a collar extending around the attachment and the first protrusion extends from the collar."**

229. It is my opinion that Mouhot discloses claim 1 as I have discussed above. *See* Section IX.D.1 which I incorporate here by reference.

230. In my opinion, Mouhot in view of Maclaine teaches this additional limitation of claim 18. For example, Maclaine discloses that its attachment "head" is connected to the handle "via a collar and a twist lock joint." Ex. 1007, [0092]. Maclaine's attachment collar includes "three protrusions" on "the internal surface of the collar" adapted to "engage a slot 90 (*see* FIG. 1*b*)" or "three separate slots provided near the distal end" of the handle. Ex. 1007, [0092]. Although the "protrusions" are not shown in Figure 7b—the figure with respect to which the protrusions are discussed—the protrusions (illustrated in purple) are shown on the internal surface of the collar (illustrated in light blue) in various other figures in Maclaine, such as Figure 3b, reproduced below.

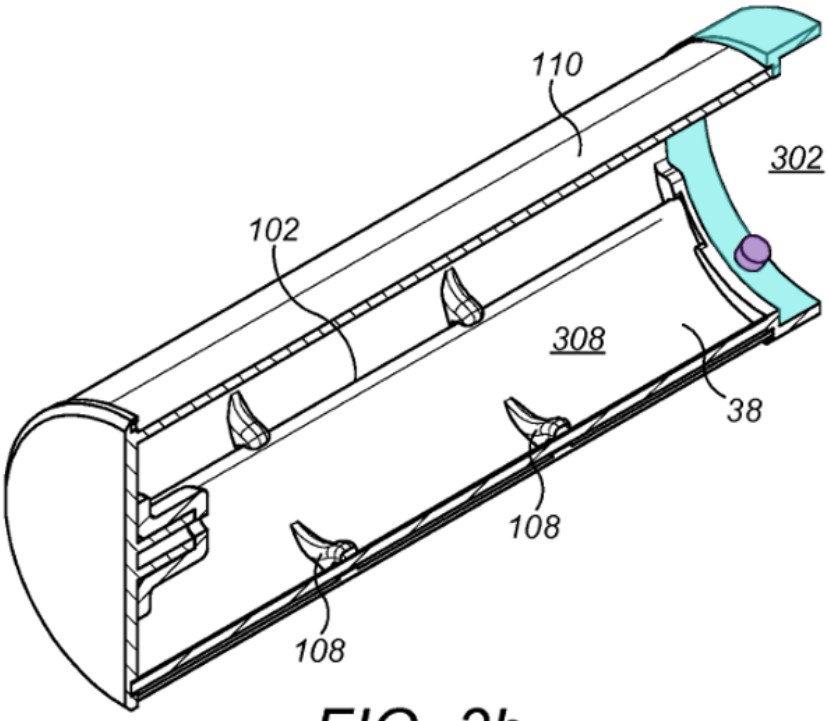

FIG. 3b

Ex. 1007, FIG. 3b (annotated).

231. Maclaine's slot 90, with which the protrusions on the internal surface of the collar of the attachment 30, are configured to engage, is located on the "distal end 22" of the handle 20, or body, of its handheld hair care appliance, and is illustrated below in green.

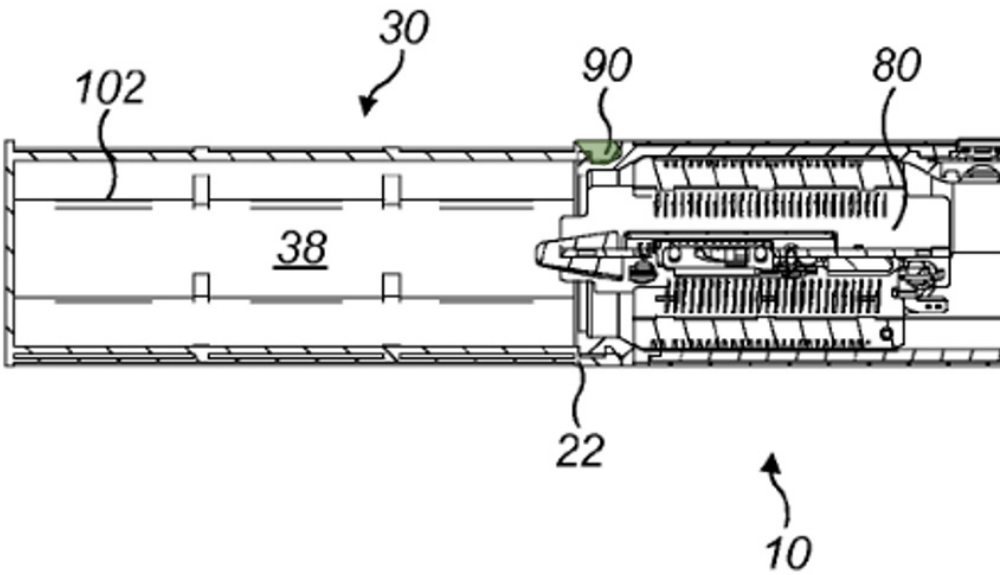

Ex. 1007, FIG. 1b (excerpt, annotated).

232. For the reasons I have explained above in Section IX.E.1 (incorporated herein by reference), one of ordinary skill in the art would have been motivated to combine Mouhot and Maclaine and would have had a reasonable expectation of success in making the combination. Thus, it is my opinion that the combination of Mouhot and Maclaine renders claim 18 obvious.

5. Dependent Claim 30

[30]	**"The appliance of claim 1, wherein the appliance is a hair care appliance."**

233. It is my opinion that Mouhot discloses the limitations of claim 1, as I have explained above. *See* Section IX.A.1 which I incorporate here by reference. In my opinion, the combination of Mouhot and Maclaine teaches this additional limitation of claim 30. For example, Maclaine discloses "a hair care appliance." Ex.

1007, [0002]-[0007] and [0019]-[0020]. For the reasons I have explained above in Section IX.E.1 (incorporated herein by reference), one of ordinary skill in the art would have been motivated to combine Mouhot and Maclaine and would have had a reasonable expectation of success in making the combination. Thus, the combination of Mouhot and Maclaine renders claim 30 obvious.

6. Dependent Claim 31

[31]	**"The appliance of claim 30, wherein the hair care appliance is a hot styling appliance."**

234. It is my opinion that Mouhot in view of Maclaine discloses the limitations of claim 30, as I have explained above. *See* Section IX.A.5 which I incorporate here by reference. In my opinion, the combination of Mouhot and Maclaine teaches this additional limitation of claim 31.

235. For example, Maclaine discloses that the hair care appliance can be "a hot styling appliance such as a hot styling brush." Ex. 1007, [0002]-[0007] and [0019]-[0020]. For the reasons explained in Section IX.E.1. (incorporated herein by reference), one of ordinary skill in the art would have been motivated to combine Mouhot and Maclaine and would have had a reasonable expectation of success in making the combination. Thus, the combination of Mouhot and Maclaine renders claim 31 obvious.

F. Ground 6: Mouhot in View of Maclaine and Jeannet Renders Obvious Claims 1-9, 15, 18, 23, 24, 30-34

236. Jeannet discloses an attachment mechanism for attaching an attachment (toothbrush head) to a body (toothbrush body). The combination of Mouhot in view of Maclaine and Jeannet additionally renders obvious claims 33 and 34 of the ’660 patent. I incorporate by reference my analysis with respect to Grounds 4 and 5 above. *See* Sections IX.D and IX.E.

1. Motivation to Combine Mouhot, Maclaine, and Jeannet

237. *See* Section IX.E.1 (which I incorporate here in its entirety by reference). As I have discussed above, one of ordinary skill in the art would have been motivated to combine Mouhot and Maclaine, and would have had a reasonable expectation of success in doing so. Additionally, one of ordinary skill in the art would have been motivated to incorporate an unlocking button, as taught by Jeannet’s unlocking button 121, into the combined Mouhot and Maclaine system.

238. One of ordinary skill in the art would have understood that an unlocking interface in the form of an unlocking button, when combined with Mouhot and Maclaine’s handheld hair care appliance, would achieve the benefits of providing a “relatively eas[y]” way to release the bayonet coupling between the body and attachment of the combined system. Ex. 1008, 1:29-36.

239. Furthermore, it would have been obvious to one of ordinary skill in the art to modify the combined system of Mouhot and Maclaine to use an unlocking

button as disclosed in Jeannet, since such a modification is a simple substitution. The combined system of Mouhot and Maclaine already uses a bayonet coupling, and the implementation of Jeannet's unlocking button would require only adding a button to the outside of ring 4 and its internal wedge-shaped means 13, 14 of Mouhot based on Jeannet's disclosure of button 121, connecting pin 124, locking peg 126 of Jeannet. Both sets of components function in the same manner (*i.e.*, they slide longitudinally) to achieve the same results, namely moving a protrusion to releasing an attachment mechanism. One of ordinary skill in the art would have had a reasonable expectation of success in implementing a simple substitution of one component of a bayonet coupling for another that performs the same function to achieve a simpler unlocking mechanism. Therefore, one of ordinary skill in the art would have been motivated to implement the unlocking mechanism of Jeannet in the combined Mouhot and Maclaine handheld hair care appliance.

2. Independent Claim 33

240. It is my opinion that limitations of claim 33 are rendered obvious by Mouhot in view of Maclaine and Jeannet.

[33pre] "A handheld appliance"

241. As I have discussed above with respect to Section IX.A.1 (incorporated herein by reference), I understand that a preamble typically does not limit a claim. Specifically, I am informed that a preamble to a claim is not limiting where it merely

states the purpose or intended use of the invention. Here, preamble [33pre] merely states that the purpose or intended use of the "appliance" is "handheld." Thus, it is my opinion that the preamble is not limiting.

242. Further, I am informed that where the body of the claim describes a structurally complete invention such that deletion of the preamble phrase does not affect the structure, that the preamble is not limiting. Here, deletion of the preamble phrase "handheld" does not affect the structure of the claimed "appliance." Without the "handheld" purpose or intended use, the preamble merely recites an "appliance," which is a generic term. For this additional reason, it is my opinion that the preamble is not limiting.

243. I also note that the dependent claims do not repeat the preamble phrase "handheld." In my opinion, a person of ordinary skill in the art would have recognized that the preamble phrase "handheld" was not intended to be limiting given the fact that it is not repeated in the dependent claims.

244. Without the "handheld" preamble phrase, Element 33[pre] recites "[a]n appliance," a generic term signaling an apparatus claim. Mouhot discloses this limitation. Mouhot discloses an improved "rapid fastener" of the "bayonet type" that establishes a connection between "two coaxial shafts." Ex. 1004, 2:14-19.

245. To the extent the preamble is found limiting, the combination of Mouhot in view of Maclaine renders this claim element obvious. For example,

Maclaine discloses a head, or "an attachment," "for a hand held appliance, in particular a hair care appliance such as a hot styling brush." Ex. 1007, [0002].

[33a] "having a body and an attachment"

246. As I have explained above, Mouhot discloses this limitation. I incorporate my analysis with respect to claim element [1a] in its entirety here by reference. *See* Section IX.D.1, which I incorporate here in its entirety by reference. Thus, Mouhot in view of Maclaine and Jeannet renders this claim element obvious.

[33b] "the body comprising an attachment mechanism having a first slot and an actuator"

247. As I have explained above, Mouhot discloses this limitation. I incorporate my analysis with respect to claim element [1b] in its entirety here by reference. *See* Section IX.D.1, which I incorporate here in its entirety by reference. Thus, Mouhot in view of Maclaine and Jeannet renders this claim element obvious.

[33c] "the attachment comprising a first protrusion configured to engage with the first slot"

248. As I have explained above, Mouhot discloses this limitation. I incorporate my analysis with respect to claim element [1c] in its entirety here by reference. *See* Section IX.D.1, which I incorporate here in its entirety by reference. Thus, Mouhot in view of Maclaine and Jeannet renders this claim element obvious.

[33d] "wherein the actuator has a first position and a second position and the actuator is slidably moved from the first position towards the second position in a longitudinal direction of the body as the first protrusion engages with the first slot"

249. As I have explained above, Mouhot discloses this limitation. I incorporate my analysis with respect to claim element [1d] in its entirety here by reference. *See* Section IX.D.1, which I incorporate here in its entirety by reference. Thus, Mouhot in view of Maclaine and Jeannet renders this claim element obvious.

[33e] "further comprising a user operated button which engages with the actuator."

250. It is my opinion that Mouhot in view of Maclaine and Jeannet renders this limitation obvious.

251. For example, Jeannet discloses a "bayonet catch" for attaching an attachment (toothbrush head) to a body (toothbrush body). Ex. 1008, Abstract. As shown in the Figure below, the toothbrush body has a locking pin 28 that is biased toward the toothbrush head end by a helical spring 52, and that has a bayonet stud 32 on the end that engages with a locking groove 106 formed in the toothbrush head.

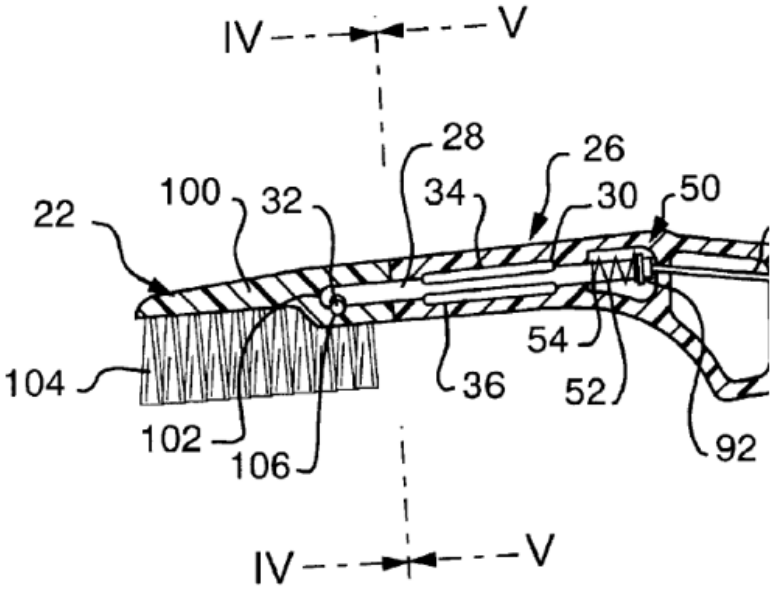

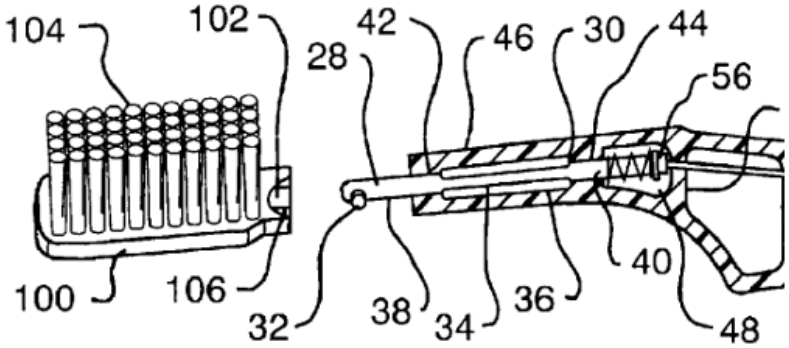

Ex. 1008, FIG. 1 (top, excerpt), FIG. 2 (bottom, excerpt).

252. Locking groove 106 has a curved configuration, as shown in Figure 6 below. The spring-bias force provided by helical spring 52 retains bayonet stud 32 in a lock-in portion 114 in the slot. Ex. 1008, 3:41-57.

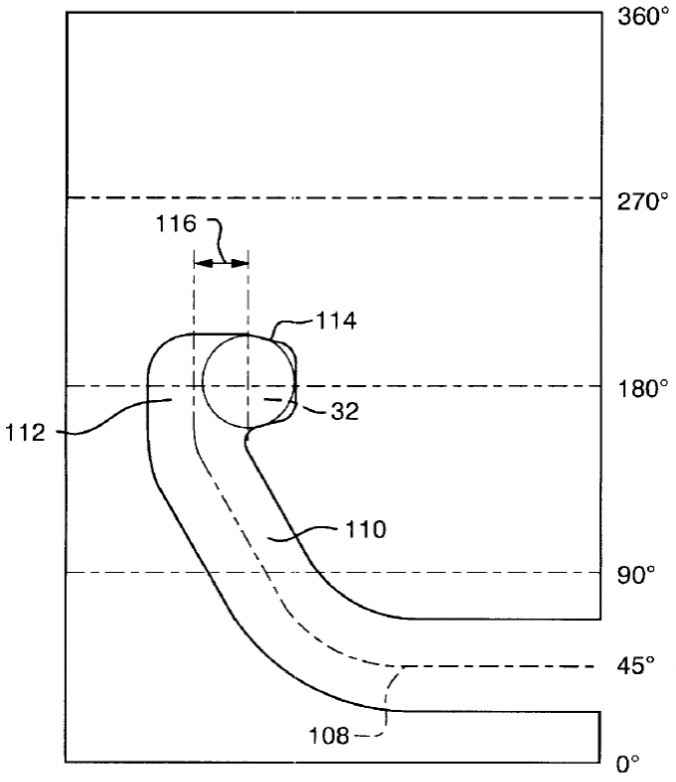

FIG. 6

Ex. 1008, FIG. 6.

253. In one embodiment, shown in Figure 10 below, the toothbrush body includes a release mechanism in the form of an "unlocking button 121" (illustrated below in light pink) on the toothbrush body that slides longitudinally (illustrated by a light pink arrow). Ex. 1008, 4:6-33. Jeannet's "unlocking button 121" is attached to "a connecting pin 124 in an elongated slot 122 on the rear side of the handle neck," and the connecting pin 124 is "secured on the underside of the unlocking button 120" and "firmly connected to the locking pin 28 by means of a locking peg 126." Ex. 1008, 4:6-33.

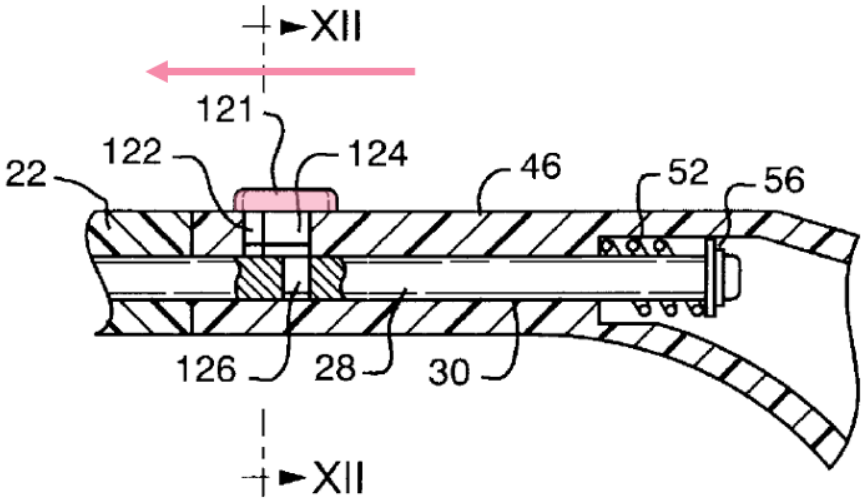

FIG. 10

Ex. 1008, FIG. 10 (annotated).

254. Thus, when unlocking button 121 is advanced toward the toothbrush head, bayonet stud 32 can be moved out of the lock-in portion 114 and released from the toothbrush head. Ex. 1008, 1:29-57; 4:6-33.

255. For the reasons I have discussed above in Section IX.F.1 (incorporated herein by reference), one of ordinary skill in the art would have been motivated to combine Mouhot, Maclaine, and Jeannet, and would have had a reasonable expectation of success in making the combination. It would have been obvious to add a button to the outside of ring 4 and its internal wedge-shaped means 13, 14 of Mouhot as taught by Jeannet's disclosure of button 121, connecting pin 124, and locking peg 126 because such a modification would be a simple addition. Both sets of components function in the same manner (i.e., they slide longitudinally) to

achieve the same results, namely moving a protrusion to releasing an attachment mechanism. Ex. 1008, Fig. 10. Thus, in my opinion, the combination of Mouhot, Maclaine, and Jeannet renders "a user operated button which engages the actuator" obvious and renders claim 33 obvious.

3. Dependent Claim 34

[34]	**"The appliance of claim 33, wherein actuation of the button moves the actuator from the first position to the second position to facilitate removal of an attachment from the body."**

256. It is my opinion that Mouhot in view of Maclaine and Jeannet renders this limitation obvious. As I have explained above, actuation of Jeannet's unlocking button 121 moves connecting pin 124, which is attached to locking peg 126, longitudinally, which in turn moves locking pin 28 and compresses helical spring 52, to thereby move locking peg 126 out of lock-in portion 114 in the slot, thus allowing removal of the head from the toothbrush body. Thus, actuation of Jeannet's unlocking button 121 moves its actuator (locking pin 28 and helical spring 52) from one position to another position to facilitate removal of the attachment from the body. Ex. 1008, 1:29-57; 4:6-33. In my opinion, one of ordinary skill in the art would have understood a button added to Mouhot's ring 11 in view of Jeannet's teaching of button 121 would similarly move ring 11 (the actuator) from its first position (*i.e.*, ring 11 positioned at the end of socket 2 farthest from coil spring 12) to a second position (*i.e.*, ring 11 compressing coil spring 12 to allow lateral protruding parts 6

to be removed from the slots comprising the combination of slots 7,8 and stop means 9, 10) to facilitate removal of the attachment from the body.

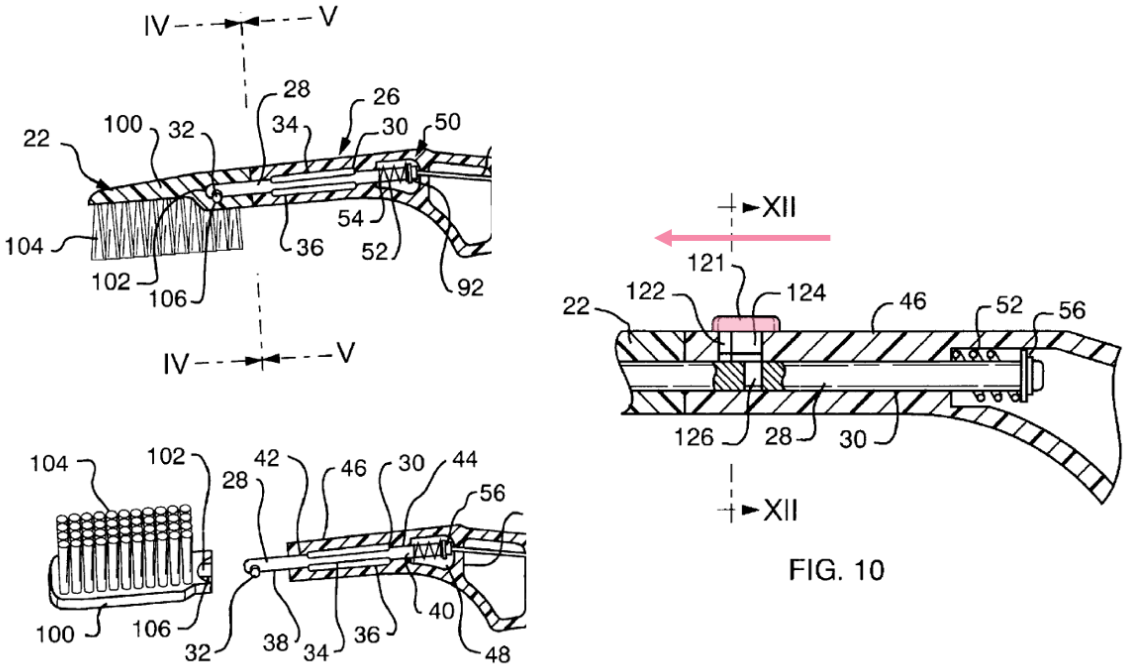

FIG. 10

Ex. 1008, FIG. 1 (left top, excerpt), FIG. 2 (left bottom, excerpt), FIG. 10 (annotated).

257. For the reasons I have discussed above in Section IX.F.1 (incorporated herein by reference), one of ordinary skill would have been motivated to combine Mouhot, Maclaine, and Jeannet, and would have had a reasonable expectation of success in making the combination. Thus, in my opinion, the combination of Mouhot, Maclaine, and Jeannet renders claim 34 obvious.

X. SECONDARY CONSIDERATIONS OF NON-OBVIOUSNESS

258. As I have explained above in Section V.B, I understand that an obviousness analysis includes consideration of "secondary" or "objective" evidence of non-obviousness, including things such as (1) a long-felt but unmet need in the

prior art that was satisfied by the claimed invention; (2) commercial success or the lack of commercial success of the claimed invention; (3) unexpected results achieved by the claimed invention; (4) praise of the claimed invention by others skilled in the art; (5) taking of licenses under the patent by others; (6) deliberate copying of the claimed invention; and (7) contemporaneous and independent invention by others.

259. I am not aware of any secondary considerations of non-obviousness raised by Dyson with respect to the ’660 Patent. For example, I am not aware of any showing of a long-felt but unmet need satisfied by the ’660 Patent. To the contrary, as explained above, the alleged “need” satisfied by the ’660 Patent had been satisfied before in references such as Hoblingre, Mouhot, Maclaine, and Jeannet. Similarly, I am not aware of any commercial success of any handheld appliances due to practicing the ’660 Patent, nor of any evidence on any of the other secondary considerations identified above.

260. Therefore, consideration of secondary indicia of non-obviousness does not alter my conclusion that the challenged claims of the ’660 Patent are invalid as obvious.

XI. CONCLUSION

261. My opinions are based upon the information that I have considered to date. I am unaware of any evidence of secondary considerations with respect to the

’660 Patent that would render any of the challenged claims non-obvious. I reserve the right, however, to supplement my opinions in the future to respond to any arguments raised by the Patent Owner and to take into account new information that becomes available to me.

I, Daniel Mark Nosenchuck, declare that all statements made herein of my knowledge are true, and that all statements made on information and belief are believed to be true, and that these statements were made with the knowledge that willful false statements and the like so made are punishable by fine or imprisonment, or both, under Section 1001 of Title 18 of the United States Code.

Dated: August 18, 2023

Daniel M. Nosenchuck

Dr. Daniel M. Nosenchuck

Appendix A

CV

Daniel M. Nosenchuck

D302B Engineering Quadrangle
Princeton University
Princeton, NJ 08544
Tel: (Office): (609) 258-5136

Education:

Ph.D.	California Institute of Technology, Pasadena, California *Aeronautics*, Thesis Advisor: H.W. Liepmann	June 1982
M.S.	California Institute of Technology, Pasadena, California *Aeronautics*	June 1977
B.S	Syracuse University, Syracuse New York *Aerospace Engineering* *Mechanical Engineering*	May 1976

Experience:

July 1988 - Present	Princeton University, Princeton NJ: Associate Professor of Mechanical and Aerospace Engineering
August 1983 – June 1988	Princeton University, Princeton NJ: Assistant Professor

Recent Teaching (Graduate and Undergraduate): Thermodynamics, Heat Transfer, Fluid Dynamics, Viscous Flows, Energy Conversion and the Environment: Applications to Transportation, Mechanical Design, Entrepreneurial Engineering (Product Design and Marketing)

Research: Experimental fluid mechanics: Turbulence control; Drag reduction; Heat Transfer, Dynamic Three-Dimensional Flow Visualization
Computer Simulation: Special-purpose computer architecture design and fabrication

Honors and Awards:

- Boeing H.G. Welliver Fellow, 1995
- Excellence in Teaching Award, Princeton University Undergraduate Engineering Council, 1993
- Presidential Young Investigator Award (NSF), 1984-1989
- GTE Emerging Scholar, 1987
- Rheinstein Award, School of Engineering, Princeton University, 1986
- IBM Faculty Development Award 1984 - 1985
- EMMY Award from the Academy of Television Arts and Sciences *for Outstanding Individual Achievement - Special Visual Effects: The Day After*, 1984
- The William F. Ballhaus Prize for an *Outstanding Doctoral Dissertation in Aeronautics* California Institute of Technology, 1982
- Graduate Fellowships, California Institute of Technology, 1976

U.S.A. Department of Defense Activities (1994 - Present):

- Member of Navel Studies Board Panels on
  - Joint Strike Operations
  - Regional Conflict (Combat Power Panel)
  - Undersea Warfare
- Member of Defense Science Board Ballistic Missile Defense Task Force
- Member of Defense Science Study Group
- Reviewer of Various Research Programs for the Operational Forces

U.S. Patents - First or Sole Inventor (Provisional, Applicattions and Foreign Patents Not Listed):

1. Patent 6,393,208 (May 2002) *Compressor with integrated impeller and motor*
2. Patent 6,168,405 (January 2001) *Wankel type pump for transporting fluid with entrained particulate matter*
3. Patent 6,014,791 (January 2000) *Quiet vacuum cleaner using a vacuum pump with a lobed chamber*
4. Patent 6,011,903 (January 2000) *Reduced-noise ducted flow hair dryer with multiple impellers and ambient air inlets*
5. Patent 5,964,433 (October 1999) *Staggered actuation of electromagnetic tiles for boundary layer control*
6. Patent No. 5,841,943 (November 1998) *Ducted flow hair dryer with multiple impellers*
7. Design Patent No. D398,074 (September 1998) *Hair Dryer*
8. Patent No. 5,492,289 (February 1996) *Lifting Body with Reduced-Strength Trailing Vortices*
9. Patent No. 5,442,790 (August 1995) *A Parameterized Optimizing Compiler*
10. Patent No. 5,437,421 (August 1995) *Multiple Electromagnetic Devices for Boundary Layer Control*
11. Patent No. 5,320,309 (June 1994) *Electromagnetic Device and Method for Boundary Layer Control*
12. Patent No. 4,811,214 (March 1989): *Dynamic Reconfiguration System for Pipelined Computers*

Numerous foreign patents also awarded for many of the above patents; other patents pending.

Technology Development and Commercialization:

- Small- and Personal-Care Appliances
  - Extensive Involvement in IP Creation and Commercial Product Development and Manufacture of Small and Personal-Care Appliances
  - Typical Example of High-Volume and -Market-Share Product: Hairdryer
    - Numerous Utility and Design Patents
    - Models Introduced: Quiet Hairdryers (numerous brands)
    - Makeup Mirrors (numerous brands)
    - Follow-on Next-Generation Models Under Major Brand Names
    - Major U.S. National Chain Retail Outlets Include: Target, Wal-Mart and Kmart
  - Other Ongoing and New-Launch Products Include Hairdryers, Lighted Makeup-Mirrors, Hair Curlers, Portable Heater-Based Appliances, Humidifiers, Vacuum-Based Appliances
- Direct-Response TV Products
  - Involved in development, prototype and manufacture of DR TV products, including
    - Air-Press Massager, Roll-A-Hose, Doggy Steps, Ped Egg, Jupiter Jack, …

Past Technology Development and Transfer:

- Navier-Stokes Computer Technology
  - Princeton University to Concurrent Computer Corporation, Tinton Falls, NJ - 1987
  - Supercomputer Solutions Inc., San Diego, CA - 1989
- Electromagnetic Flow-Control Technology
  - Princeton University to Nova Innovations, San Diego, CA - 1993

Consulting Experience:

- Avolio and Hanlon, P.C., Lawrenceville, NJ
- Boeing Company, Seattle, WA
- Defense Science Board, Washington DC
- DSV Partners, Princeton, NJ
- Greenberg Traurig, LLP, New York, NY
- General Atomics, San Diego, CA
- Helen of Troy, El Paso, TX
- Hultquist IP, Chapel Hill, NC
- Institute for Defense Analysis, Alexandria VA
- The Manica Group, Tokyo, Japan
- Matsushita Electric Works, Osaka, Japan
- Nova Innovations Corporation, San Diego, CA
- National Research Council (Naval Studies Board)
- Northwest Research Associates Inc., Belleview WA
- Praxis Film Works, North Hollywood, CA
- Princeton Combustion Research Laboratories, Princeton, NJ
- Rubin/Anders Scientific Inc., Brookline, MA
- Security and Exchange Commission, Denver, CO
- Telebrands, Fairfield, NJ
- Union Camp Corporation, Lawrenceville, NJ
- Wiggin and Dana, Hartford, CT
- Wolf Popper Ross Wolf and Jones, New York City, NY

Reviewer for:

- AIAA Journal
- Journal of Fluid Mechanics
- Physics of Fluids
- Review of Scientific Instruments
- National Science Foundation (Proposals and NYI Selection Committee)

DANIEL M. NOSENCHUCK, Ph.D.

Associate Professor
Department of Mechanical and Aerospace Engineering
Princeton University
Princeton, New Jersey 08544
dan@princeton.edu

Daniel Nosenchuck received his BS in both Mechanical and Aerospace Engineering (cum laude) from Syracuse University in 1976. He then received his Ph.D. in Aeronautics from the California Institute of Technology (Caltech) in 1982, for which he was the charter winner of the William Ballhaus Prize for an outstanding thesis. After a year as a post-doctoral fellow in Aeronautics at Caltech, he joined the faculty in Mechanical and Aerospace Engineering at Princeton University.

His interests include experimental and computational fluid mechanics, dynamic flow control and visualization, heat transfer, advanced parallel supercomputer and compiler architectures, and concurrent design, manufacture and test of complex aero-mechanical systems, and consumer product design, manufacture and marketing. His major scientific and engineering contributions include experimental active laminar-flow control, the first successful demonstration of active turbulence control, the development of electromagnetic turbulence control, and the creation of a parallel-processing supercomputer for complex flow simulations. He was a charter-year recipient of the five-year NSF Presidential Young Investigator Award (1984-89), a recipient of the IBM Faculty Development Award (1984-85) and the Princeton University School of Engineering Rhinestein Award (1986) for work related to the implementation of unique flow-control concepts, and the development of new flow visualization techniques. He was a Boeing Welliver Fellow (1995) and is active in industrial consulting and technology transfer. He also consults directly with the Department of Defense, has been a member of the DoD/IDA Defense Science Study Group and is frequently a member of various DoD Defense Science Board and Naval Studies Board Task Forces and Panels.

Daniel Nosenchuck has a dozen US Utility and Design Patents as primary inventor, along with foreign patents in areas ranging from supercomputers and aircraft drag reduction and safety, to commercial products. In the latter category, he developed and introduced a range of branded (e.g. Revlon, Helen-of-Troy) personal care appliances, including the Revlon Perfect Look Makeup Mirror and the first successfully mass-marketed quiet hairdryer: the Revlon 'Get Quiet.' In the direct-marketing category, he has been extensively involved in the development of well-received mass-market products, such as Roll-A-Hose, Doggy Steps, Ped Egg, Jupiter Jack and others. For the past several decades, he has spent considerable time in China, Thailand and Japan where he has been working with businesses and factories in direct support of the development of commercial prototypes and transition to large-scale manufacture. He has also consulted with a number of patent and intellectual property firms in a variety of matters, including IPR issues.

Among his other interests, he has worked in Hollywood as a consultant on special effects, and in 1984 he received the Academy of Television Arts and Sciences *Primetime Emmy Award* for `Outstanding Individual Achievement in Special Visual Effects: The Day After." Contemporaneous with the ABC's airing of *The Day After* (which was the most-watched TV-movie of all time), the mushroom clouds and missile launches he created for the film were prominently featured in numerous national and international print and media publications, including the cover of Newsweek.

Some of his further activities include flying (Commercial Pilot since 1973; former FAA Certified Flight Instructor in Airplanes and Gliders 1974-1982), and fine woodworking (furniture and cabinet making). He enjoys motorcycling, and is currently Vice President of the Star of David Bikers motorcycle club.