US007876373B2

(12) **United States Patent**
Ochi et al.

(10) **Patent No.: US 7,876,373 B2**
(45) **Date of Patent: Jan. 25, 2011**

(54) **CAMERA WITH VIEWFINDER**

(75) Inventors: **Masahito Ochi**, Chiba (JP); **Hisashi Sano**, Tokyo (JP); **Toshiaki Maeda**, Yokohama (JP); **Kazuma Hosoi**, Narashino (JP); **Akira Ohmura**, Tokyo (JP)

(73) Assignee: **Nikon Corporation**, Tokyo (JP)

(*) Notice: Subject to any disclaimer, the term of this patent is extended or adjusted under 35 U.S.C. 154(b) by 753 days.

(21) Appl. No.: **11/907,088**

(22) Filed: **Oct. 9, 2007**

(65) **Prior Publication Data**

US 2008/0084484 A1 Apr. 10, 2008

(30) **Foreign Application Priority Data**

Oct. 10, 2006 (JP) 2006-276637

(51) **Int. Cl.**
H04N 5/222 (2006.01)
G03B 13/02 (2006.01)

(52) **U.S. Cl.** **348/333.01**; 396/374

(58) **Field of Classification Search** ..... None
See application file for complete search history.

(56) **References Cited**

U.S. PATENT DOCUMENTS

6,037,972	A *	3/2000	Horiuchi et al.	348/64
6,441,854	B2 *	8/2002	Fellegara et al.	348/333.13
6,507,711	B2 *	1/2003	Maruyama	396/374
7,593,634	B2 *	9/2009	Terada	396/257
2007/0084493	A1 *	4/2007	Prusmack	135/135
2007/0242942	A1 *	10/2007	Nozaki et al.	396/123
2007/0248345	A1 *	10/2007	Nozaki et al.	396/123
2008/0088729	A1 *	4/2008	Ochi et al.	348/333.01

FOREIGN PATENT DOCUMENTS

JP	A 05-145818	6/1993
JP	A 08-063597	3/1996
JP	A 2001-016573	1/2001

* cited by examiner

Primary Examiner—Justin P Misleh
(74) *Attorney, Agent, or Firm*—Oliff & Berridge, PLC

(57) **ABSTRACT**

A camera includes a first image pickup section that photographs a recording-purpose image, a viewfinder optical system, a second image pickup section, a mounting section, a display processing section, a displaying section, and a controlling section. The viewfinder optical system has an eyepiece section that can observe an optical image of a subject with a light flux from a photographing optical path of the first image pickup section. The second image pickup section photographs a view confirming image from an optical path different from that of the first image pickup section. The mounting section acquires focal-length information of an interchangeable lens. The display processing section executes display processing that superimposes a frame indicating a range of a field angle of the first image pickup section, onto the view confirming image. The displaying section provides the eyepiece section with the view confirming image having been processed with the display processing. The controlling section switches between a first state to provide the eyepiece section with the optical image and a second state to provide the eyepiece section with the view confirming image. Then, the displaying section changes a size of a frame based on the focal-length information when in the second state.

22 Claims, 15 Drawing Sheets

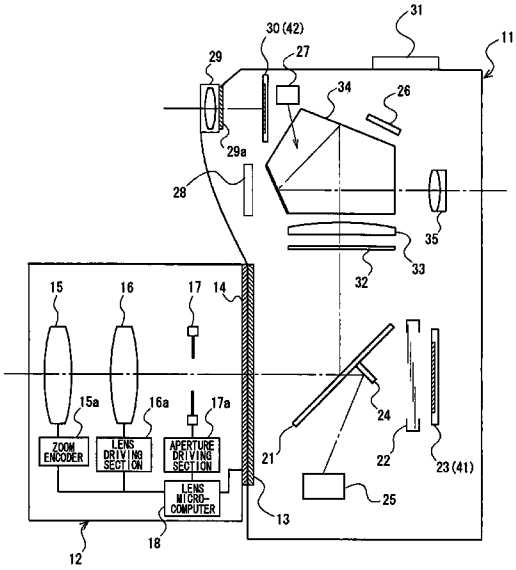

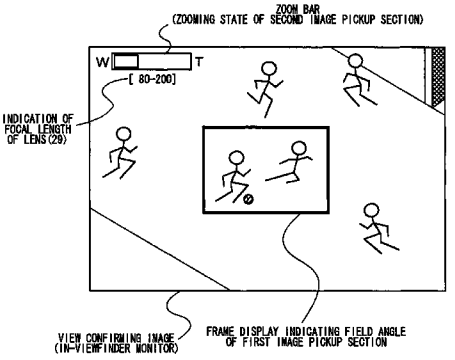

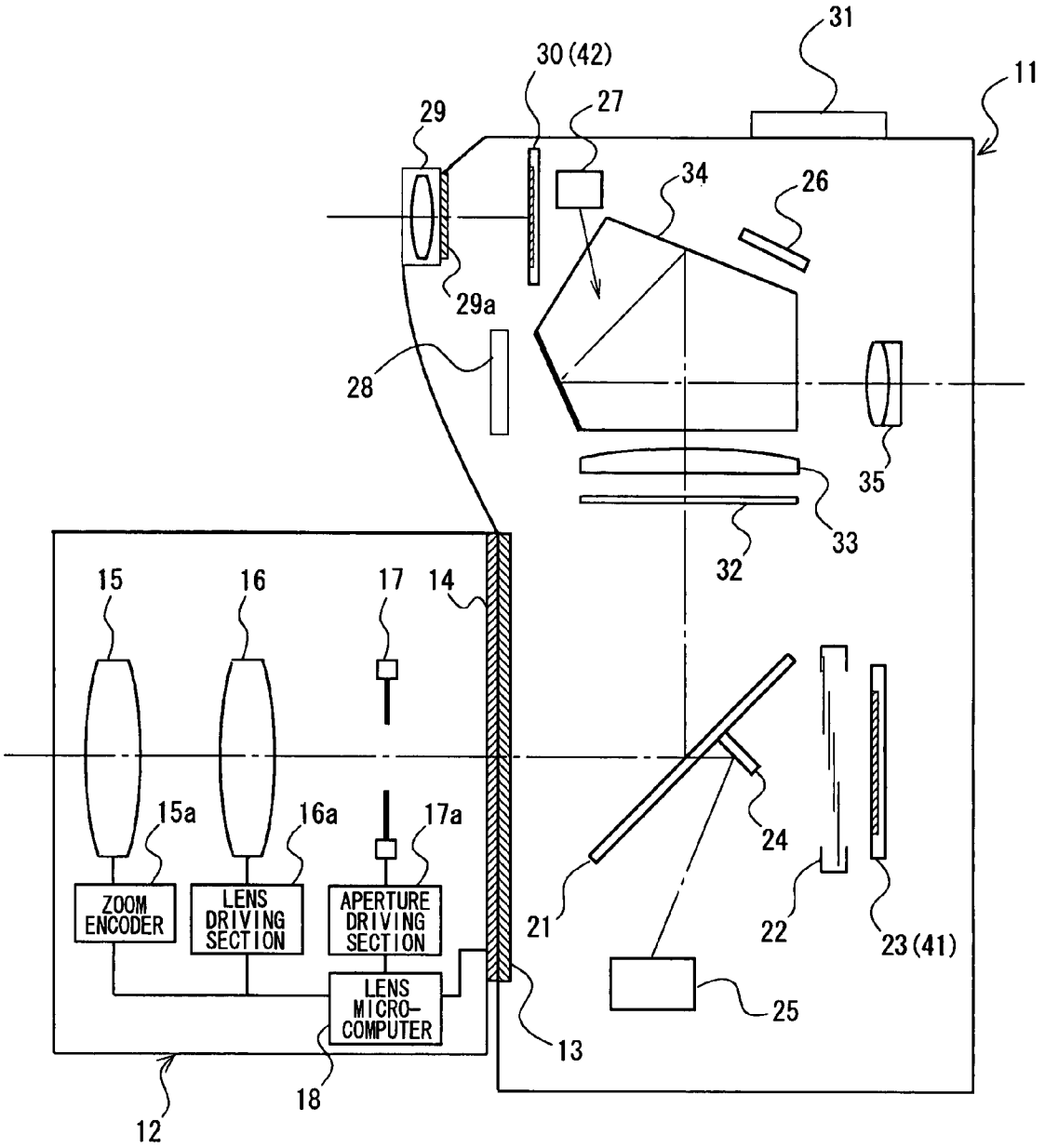
31
30 (42)
11
29
27
34
26
29a
28
35
33
32
15
16
17
14
15a
16a
17a
24
ZOOM ENCODER
LENS DRIVING SECTION
APERTURE DRIVING SECTION
21
22
23 (41)
LENS MICRO-COMPUTER
25
13
18
12

FIG. 1

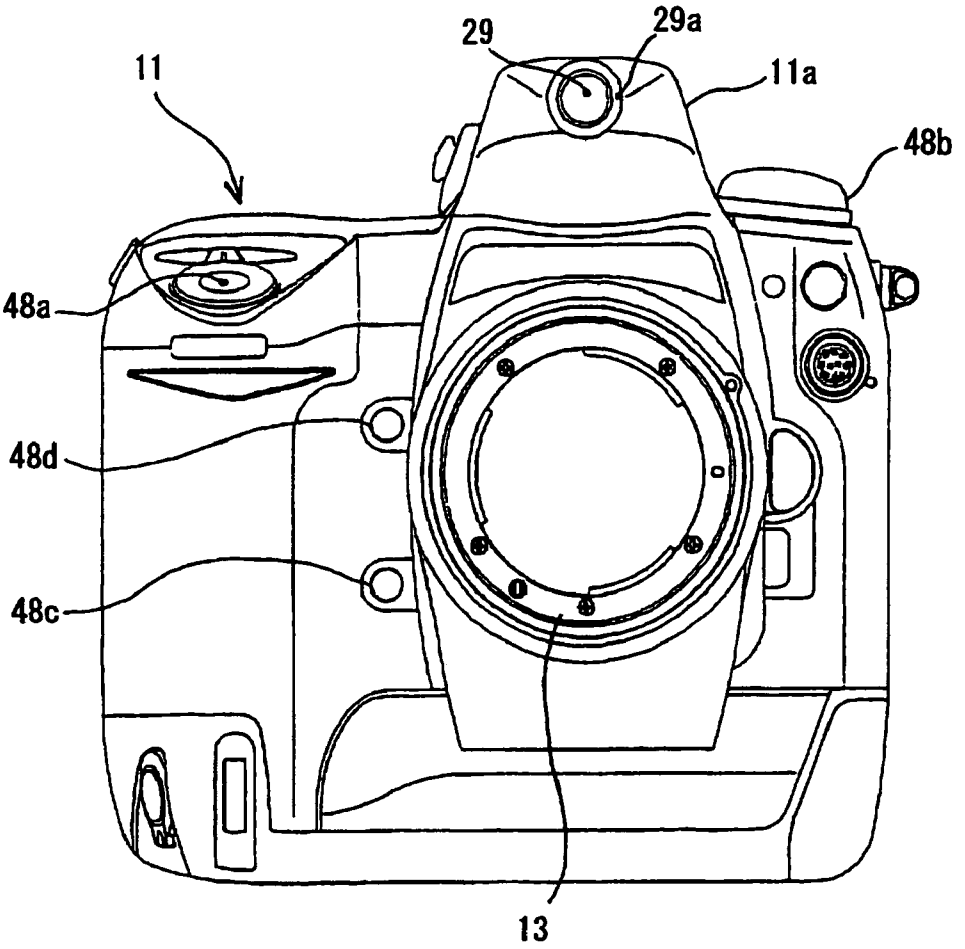

FIG.2

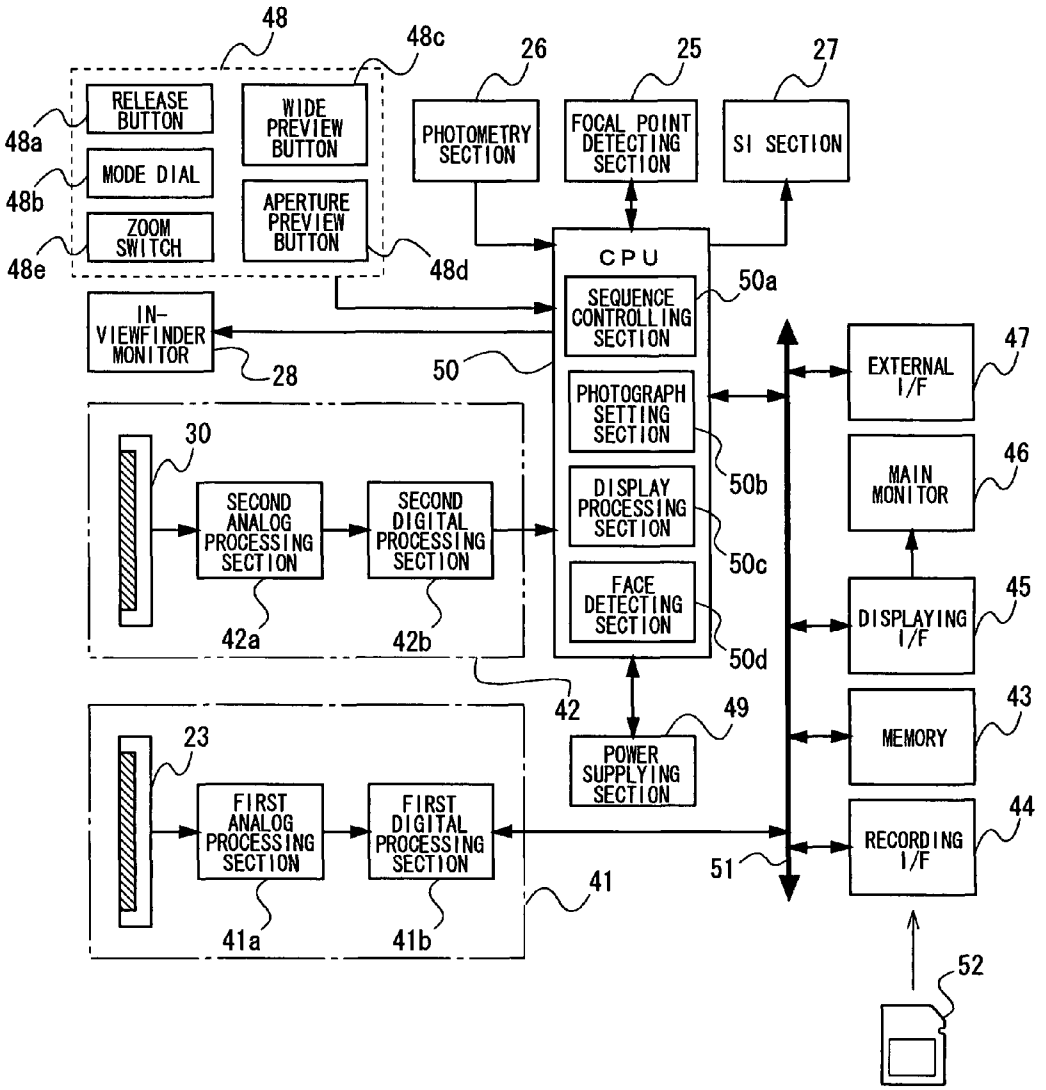
48
48c
26
25
27
RELEASE BUTTON
WIDE PREVIEW BUTTON
PHOTOMETRY SECTION
FOCAL POINT DETECTING SECTION
SI SECTION
48a
MODE DIAL
48b
ZOOM SWITCH
APERTURE PREVIEW BUTTON
48e
48d
CPU
50a
SEQUENCE CONTROLLING SECTION
IN-VIEWFINDER MONITOR
28
50
47
EXTERNAL I/F
PHOTOGRAPH SETTING SECTION
30
46
MAIN MONITOR
50b
SECOND ANALOG PROCESSING SECTION
SECOND DIGITAL PROCESSING SECTION
DISPLAY PROCESSING SECTION
50c
45
DISPLAYING I/F
FACE DETECTING SECTION
42a
42b
50d
42
49
43
23
POWER SUPPLYING SECTION
MEMORY
FIRST ANALOG PROCESSING SECTION
FIRST DIGITAL PROCESSING SECTION
44
RECORDING I/F
51
41
41a
41b
52

FIG.3

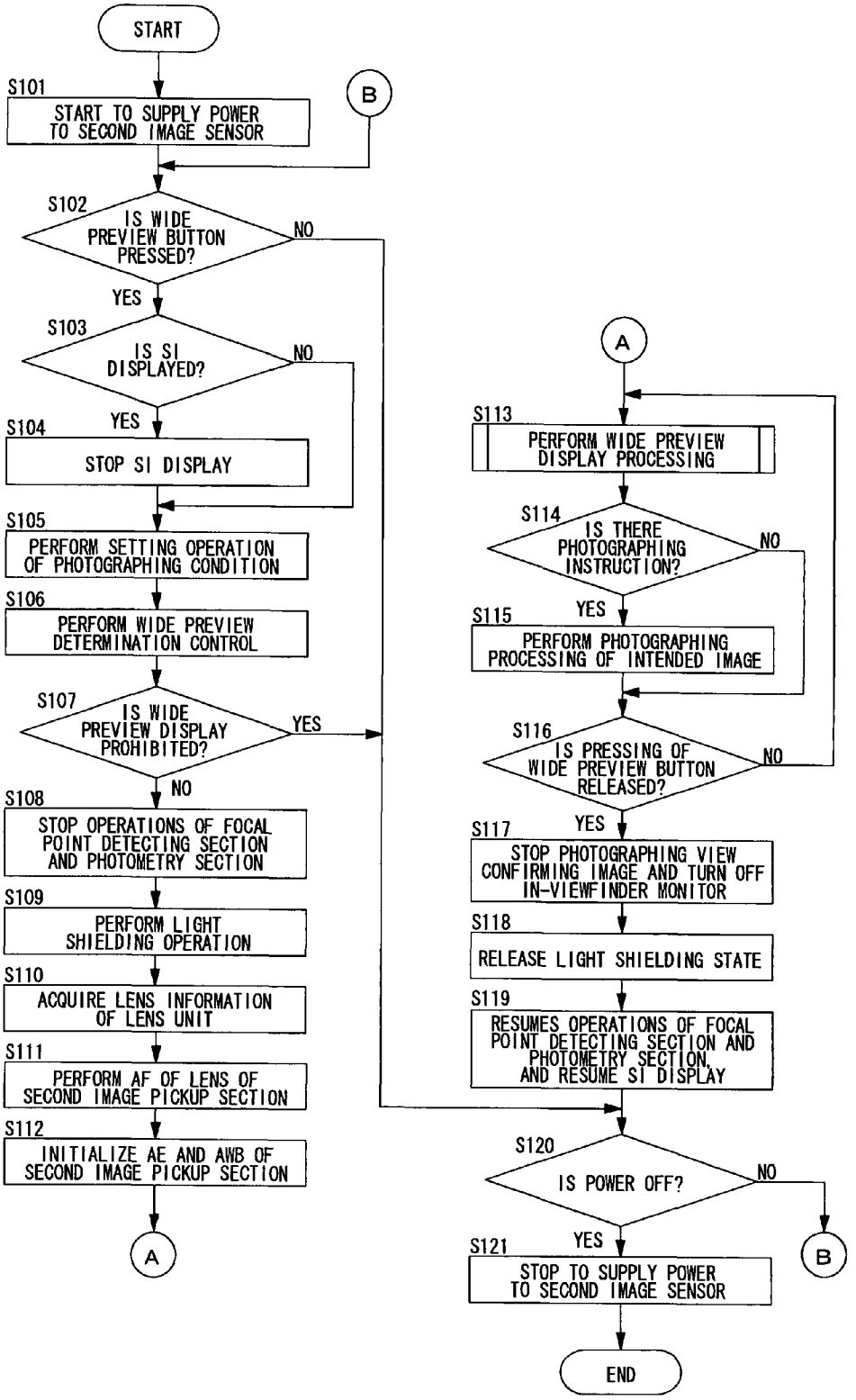
START
S101
START TO SUPPLY POWER TO SECOND IMAGE SENSOR
B
S102
IS WIDE PREVIEW BUTTON PRESSED?
NO
YES
S103
IS SI DISPLAYED?
NO
YES
S104
STOP SI DISPLAY
S105
PERFORM SETTING OPERATION OF PHOTOGRAPHING CONDITION
S106
PERFORM WIDE PREVIEW DETERMINATION CONTROL
S107
IS WIDE PREVIEW DISPLAY PROHIBITED?
YES
NO
S108
STOP OPERATIONS OF FOCAL POINT DETECTING SECTION AND PHOTOMETRY SECTION
S109
PERFORM LIGHT SHIELDING OPERATION
S110
ACQUIRE LENS INFORMATION OF LENS UNIT
S111
PERFORM AF OF LENS OF SECOND IMAGE PICKUP SECTION
S112
INITIALIZE AE AND AWB OF SECOND IMAGE PICKUP SECTION
A
A
S113
PERFORM WIDE PREVIEW DISPLAY PROCESSING
S114
IS THERE PHOTOGRAPHING INSTRUCTION?
NO
YES
S115
PERFORM PHOTOGRAPHING PROCESSING OF INTENDED IMAGE
S116
IS PRESSING OF WIDE PREVIEW BUTTON RELEASED?
NO
YES
S117
STOP PHOTOGRAPHING VIEW CONFIRMING IMAGE AND TURN OFF IN-VIEWFINDER MONITOR
S118
RELEASE LIGHT SHIELDING STATE
S119
RESUMES OPERATIONS OF FOCAL POINT DETECTING SECTION AND PHOTOMETRY SECTION, AND RESUME SI DISPLAY
S120
IS POWER OFF?
NO
YES
B
S121
STOP TO SUPPLY POWER TO SECOND IMAGE SENSOR
END

FIG.4

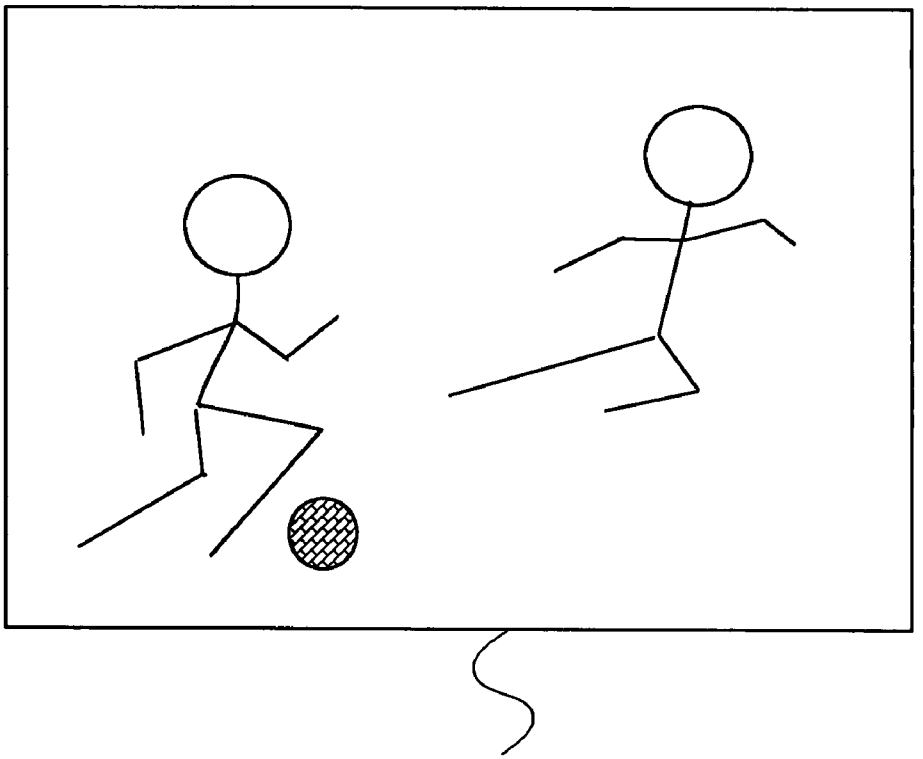

FIG.5

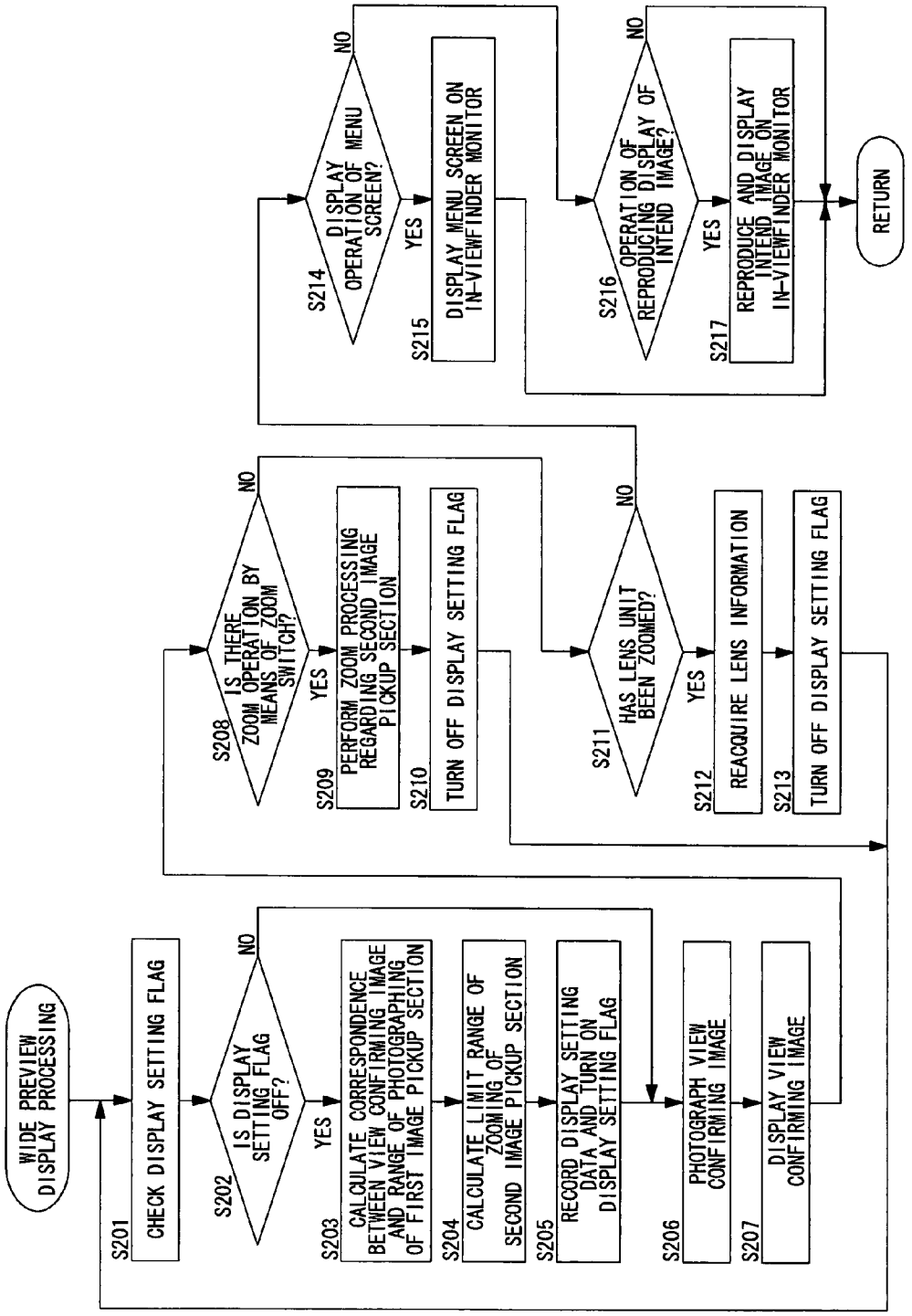
WIDE PREVIEW DISPLAY PROCESSING
S201
CHECK DISPLAY SETTING FLAG
S202
IS DISPLAY SETTING FLAG OFF?
YES
NO
S203
CALCULATE CORRESPONDENCE BETWEEN VIEW CONFIRMING IMAGE AND RANGE OF PHOTOGRAPHING OF FIRST IMAGE PICKUP SECTION
S204
CALCULATE LIMIT RANGE OF ZOOMING OF SECOND IMAGE PICKUP SECTION
S205
RECORD DISPLAY SETTING DATA AND TURN ON DISPLAY SETTING FLAG
S206
PHOTOGRAPH VIEW CONFIRMING IMAGE
S207
DISPLAY VIEW CONFIRMING IMAGE
S208
IS THERE ZOOM OPERATION BY MEANS OF ZOOM SWITCH?
YES
NO
S209
PERFORM ZOOM PROCESSING REGARDING SECOND IMAGE PICKUP SECTION
S210
TURN OFF DISPLAY SETTING FLAG
S211
HAS LENS UNIT BEEN ZOOMED?
YES
NO
S212
REACQUIRE LENS INFORMATION
S213
TURN OFF DISPLAY SETTING FLAG
S214
DISPLAY OPERATION OF MENU SCREEN?
YES
NO
S215
DISPLAY MENU SCREEN ON IN-VIEWFINDER MONITOR
S216
OPERATION OF REPRODUCING DISPLAY OF INTEND IMAGE?
YES
NO
S217
REPRODUCE AND DISPLAY INTEND IMAGE ON IN-VIEWFINDER MONITOR
RETURN

FIG.6

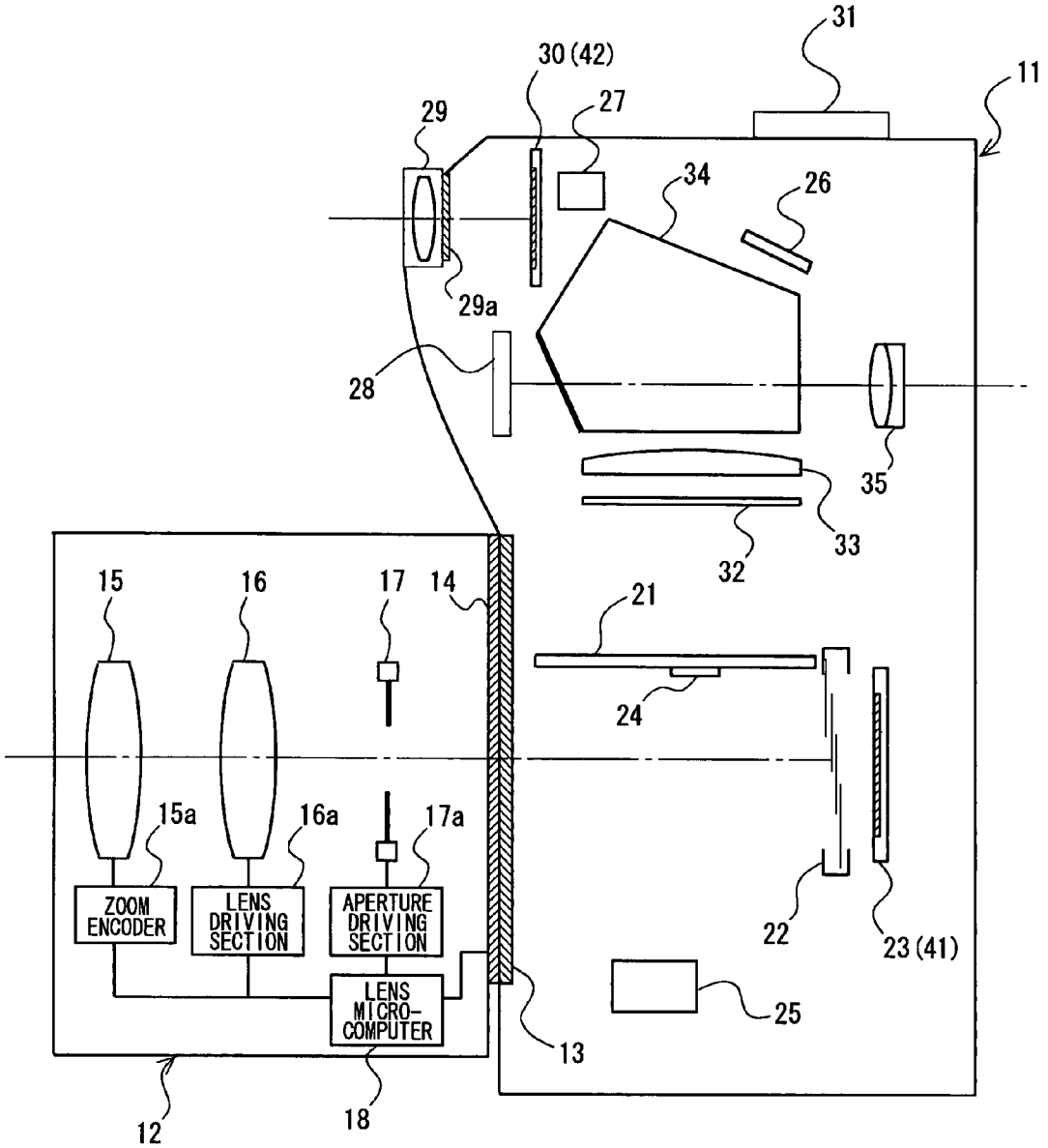
31
30 (42)
11
29
27
34
26
29a
28
35
33
32
15
16
17
14
21
24
15a
16a
17a
ZOOM ENCODER
LENS DRIVING SECTION
APERTURE DRIVING SECTION
LENS MICRO-COMPUTER
22
23 (41)
25
13
12
18

FIG.7

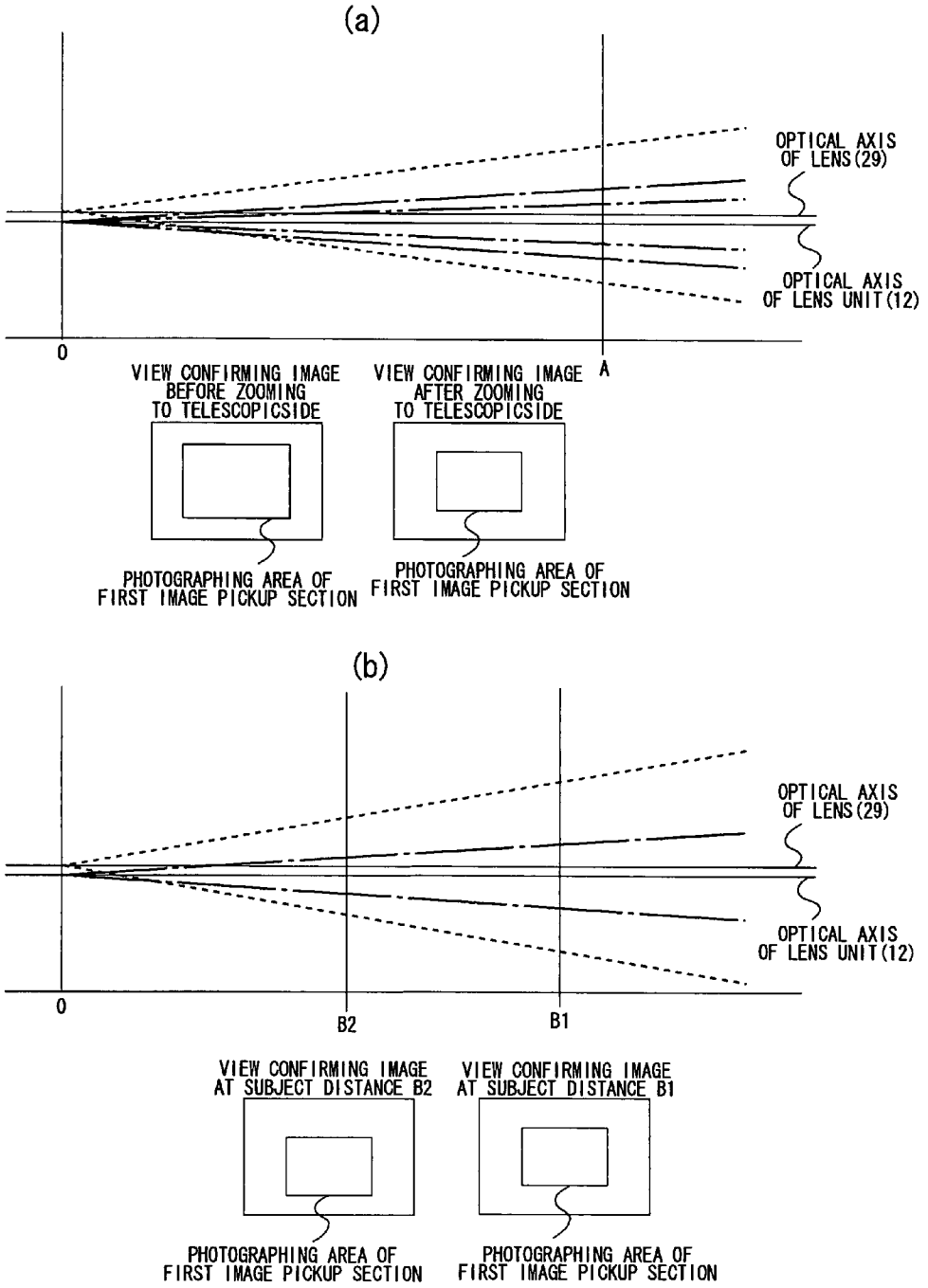
(a)
OPTICAL AXIS OF LENS(29)
OPTICAL AXIS OF LENS UNIT(12)
0
A
VIEW CONFIRMING IMAGE BEFORE ZOOMING TO TELESCOPICSIDE
VIEW CONFIRMING IMAGE AFTER ZOOMING TO TELESCOPICSIDE
PHOTOGRAPHING AREA OF FIRST IMAGE PICKUP SECTION
PHOTOGRAPHING AREA OF FIRST IMAGE PICKUP SECTION
(b)
OPTICAL AXIS OF LENS(29)
OPTICAL AXIS OF LENS UNIT(12)
0
B2
B1
VIEW CONFIRMING IMAGE AT SUBJECT DISTANCE B2
VIEW CONFIRMING IMAGE AT SUBJECT DISTANCE B1
PHOTOGRAPHING AREA OF FIRST IMAGE PICKUP SECTION
PHOTOGRAPHING AREA OF FIRST IMAGE PICKUP SECTION

FIG.8

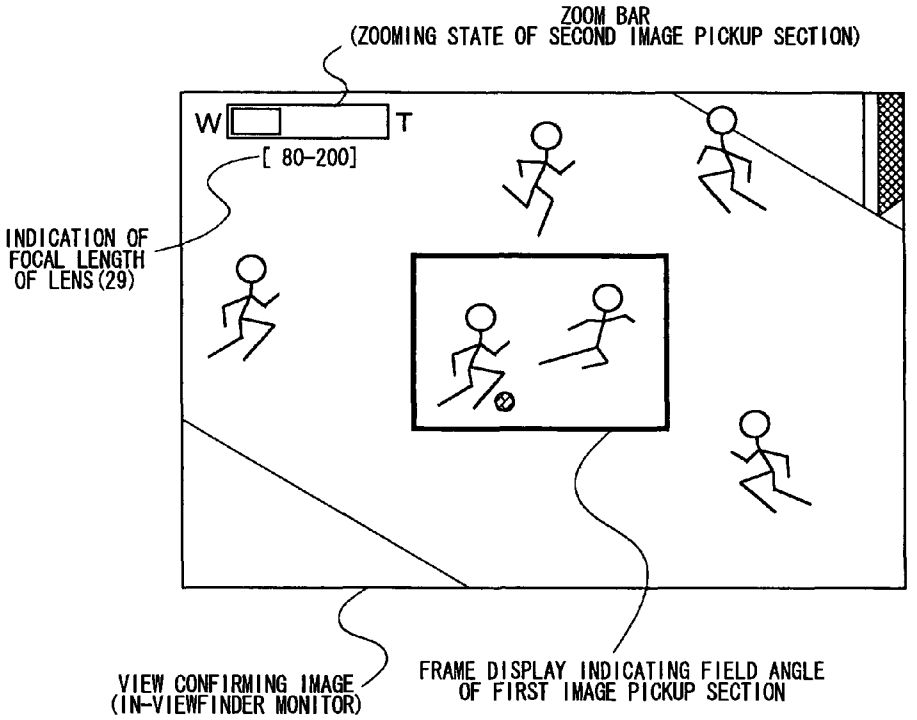
ZOOM BAR
(ZOOMING STATE OF SECOND IMAGE PICKUP SECTION)
W
T
[80-200]
INDICATION OF
FOCAL LENGTH
OF LENS(29)
VIEW CONFIRMING IMAGE
(IN-VIEWFINDER MONITOR)
FRAME DISPLAY INDICATING FIELD ANGLE
OF FIRST IMAGE PICKUP SECTION

FIG.9

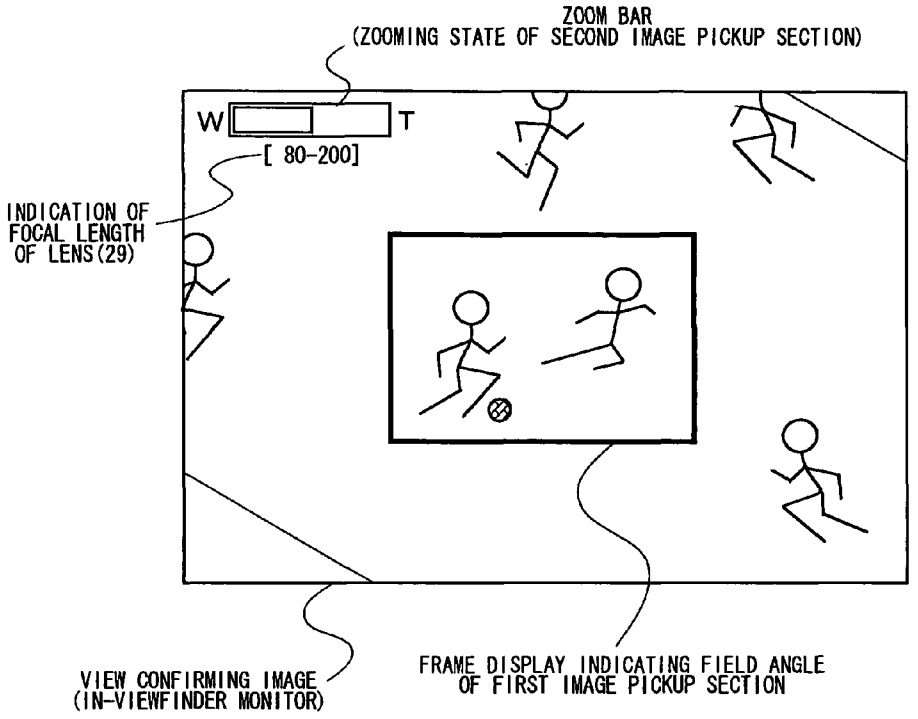
ZOOM BAR
(ZOOMING STATE OF SECOND IMAGE PICKUP SECTION)
W
T
[80-200]
INDICATION OF
FOCAL LENGTH
OF LENS(29)
VIEW CONFIRMING IMAGE
(IN-VIEWFINDER MONITOR)
FRAME DISPLAY INDICATING FIELD ANGLE
OF FIRST IMAGE PICKUP SECTION

FIG.10

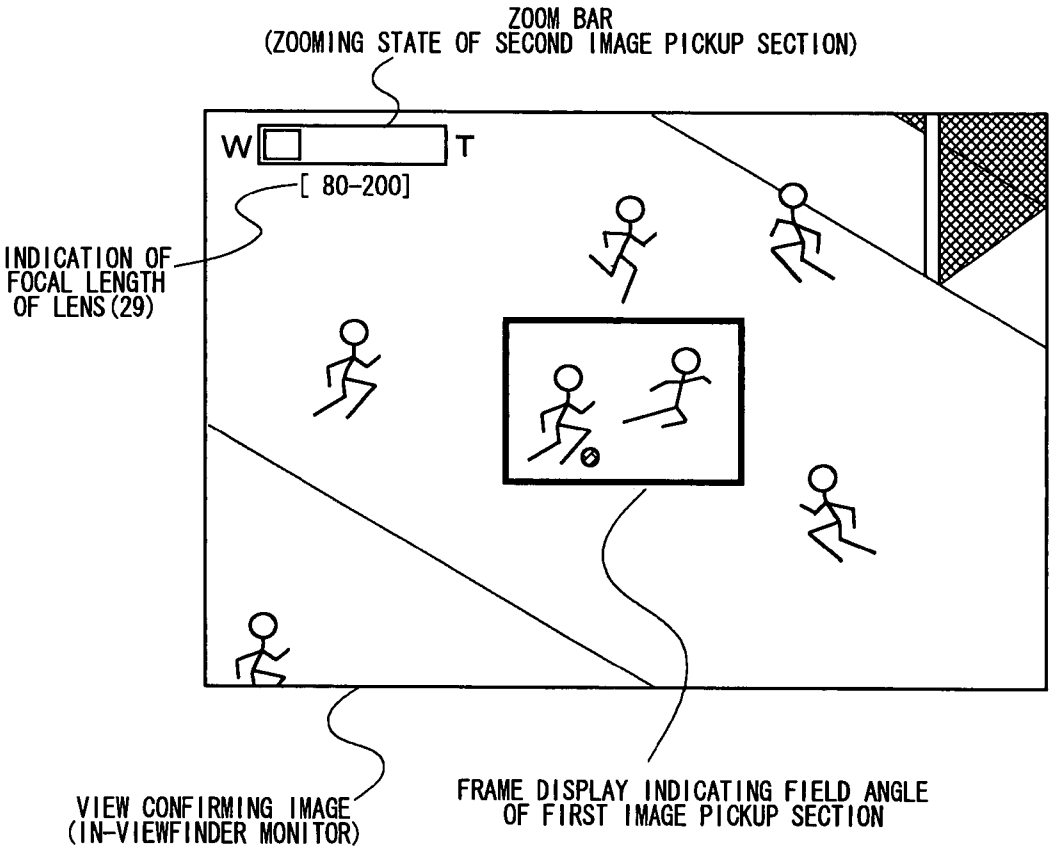
ZOOM BAR
(ZOOMING STATE OF SECOND IMAGE PICKUP SECTION)
W
T
[80-200]
INDICATION OF FOCAL LENGTH OF LENS(29)
VIEW CONFIRMING IMAGE (IN-VIEWFINDER MONITOR)
FRAME DISPLAY INDICATING FIELD ANGLE OF FIRST IMAGE PICKUP SECTION

FIG.11

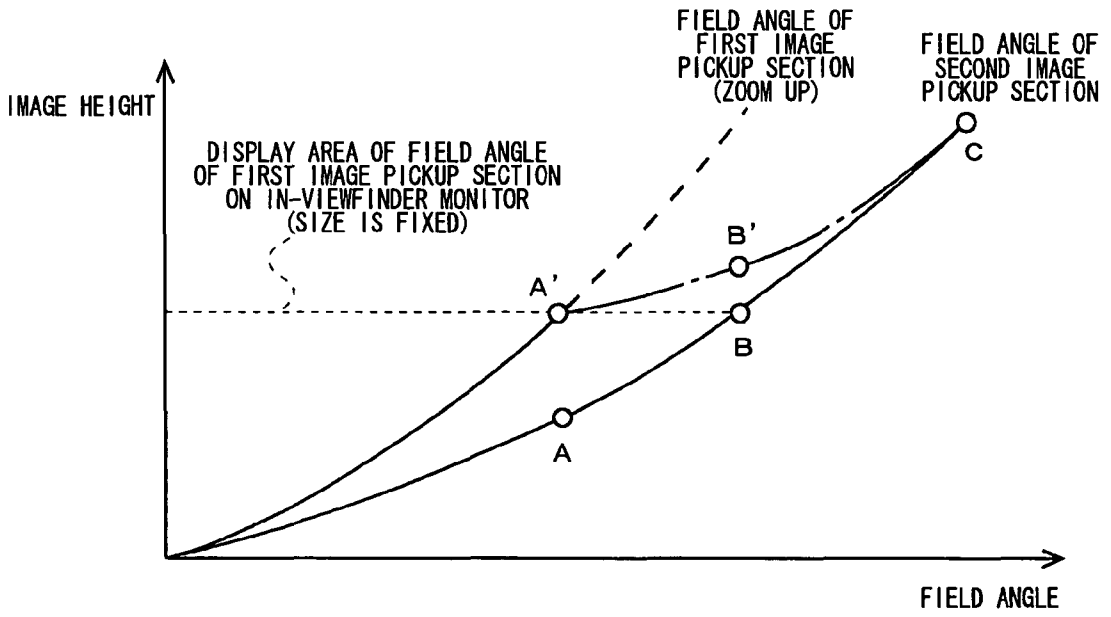
FIELD ANGLE OF FIRST IMAGE PICKUP SECTION (ZOOM UP)
FIELD ANGLE OF SECOND IMAGE PICKUP SECTION
IMAGE HEIGHT
DISPLAY AREA OF FIELD ANGLE OF FIRST IMAGE PICKUP SECTION ON IN-VIEWFINDER MONITOR (SIZE IS FIXED)
C
B'
A'
B
A
FIELD ANGLE

FIG.12

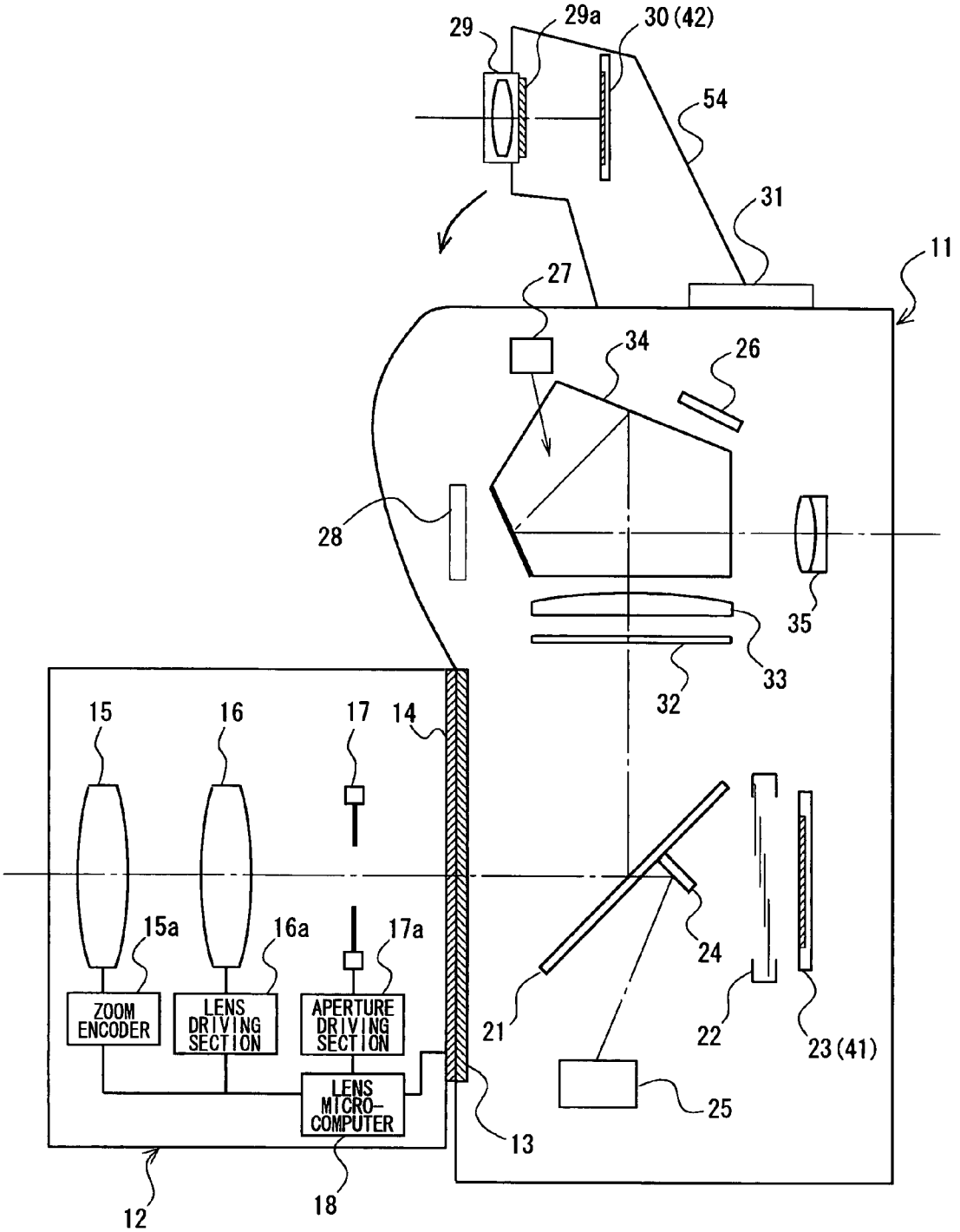
29
29a
30 (42)
54
31
11
27
34
26
28
35
33
32
15
16
17
14
15a
16a
17a
ZOOM ENCODER
LENS DRIVING SECTION
APERTURE DRIVING SECTION
LENS MICRO-COMPUTER
24
21
22
23 (41)
25
13
12
18

FIG.13

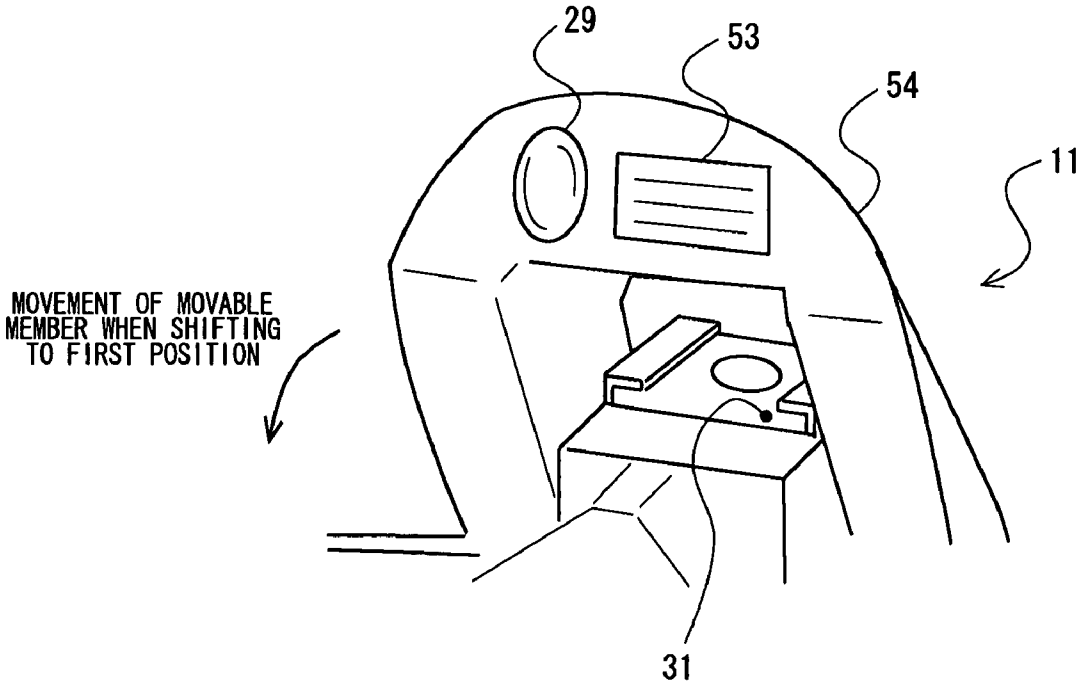
29
53
54
11
MOVEMENT OF MOVABLE MEMBER WHEN SHIFTING TO FIRST POSITION
31

FIG.14

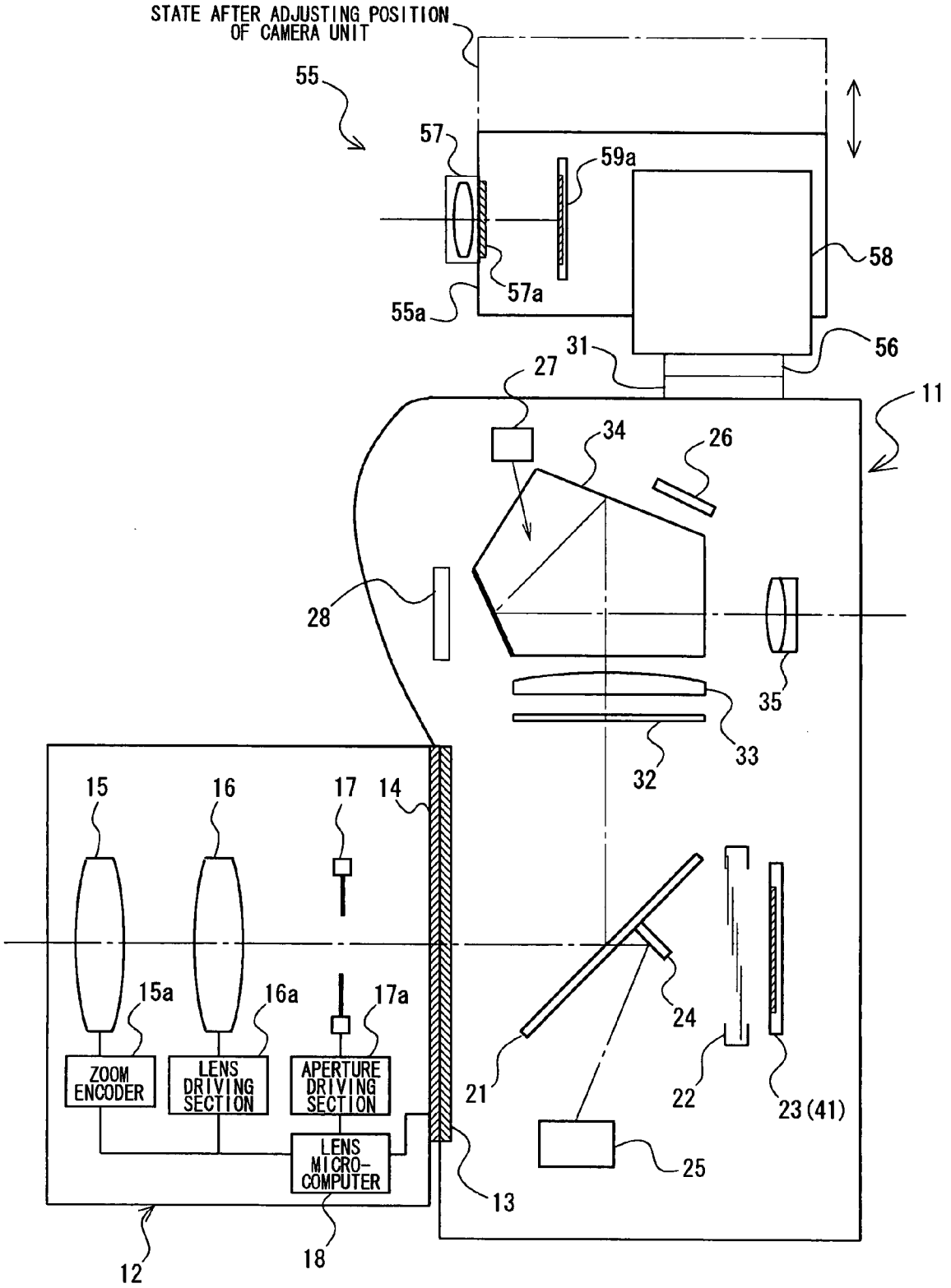
STATE AFTER ADJUSTING POSITION OF CAMERA UNIT
55
57
59a
58
57a
55a
31
56
27
11
34
26
28
35
33
32
15
16
17
14
15a
16a
17a
24
ZOOM ENCODER
LENS DRIVING SECTION
APERTURE DRIVING SECTION
21
22
23 (41)
LENS MICRO-COMPUTER
25
13
12
18

FIG.15

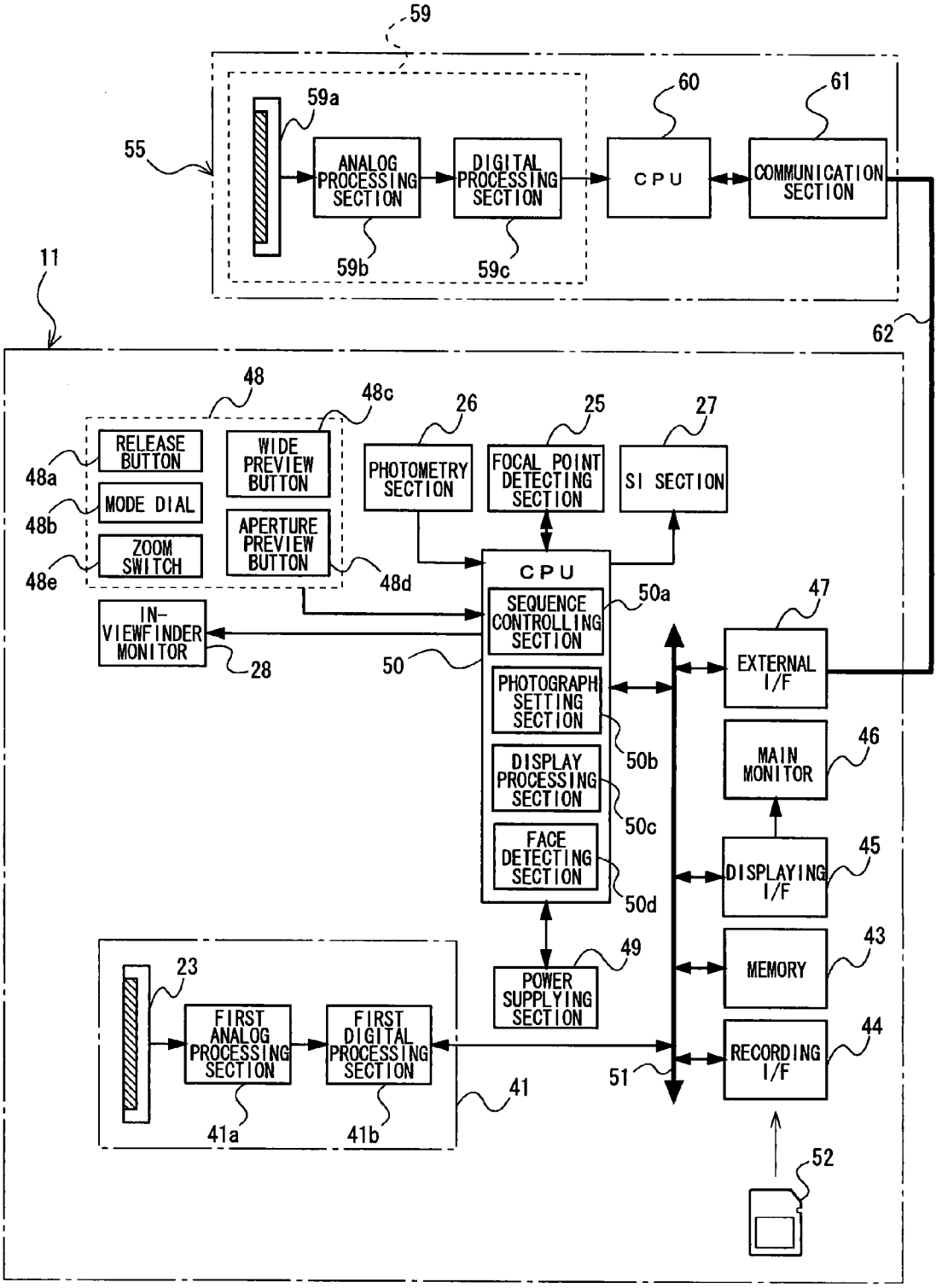
59
59a
55
ANALOG PROCESSING SECTION
DIGITAL PROCESSING SECTION
CPU
COMMUNICATION SECTION
60
61
59b
59c
11
62
48
48c
26
25
27
RELEASE BUTTON
WIDE PREVIEW BUTTON
PHOTOMETRY SECTION
FOCAL POINT DETECTING SECTION
SI SECTION
48a
MODE DIAL
48b
ZOOM SWITCH
APERTURE PREVIEW BUTTON
48e
48d
CPU
SEQUENCE CONTROLLING SECTION
50a
47
IN-VIEWFINDER MONITOR
28
50
EXTERNAL I/F
PHOTOGRAPH SETTING SECTION
50b
MAIN MONITOR
46
DISPLAY PROCESSING SECTION
50c
FACE DETECTING SECTION
45
DISPLAYING I/F
50d
49
43
23
POWER SUPPLYING SECTION
MEMORY
FIRST ANALOG PROCESSING SECTION
FIRST DIGITAL PROCESSING SECTION
44
RECORDING I/F
51
41
41a
41b
52

FIG.16

CAMERA WITH VIEWFINDER

CROSS-REFERENCE TO RELATED APPLICATION

This application is based upon and claims the benefit of priority from Japanese Patent Application No. 2006-276637, filed on Oct. 10, 2006, the entire content of which is incorporated herein by reference.

BACKGROUND

1. Field

The present invention relates to cameras having a viewfinder suitable for telescopic photographing and the like.

2. Description of the Related Art

Conventionally, a digital camera can determine a photographing composition by displaying an image currently photographed onto a display device, such as an LCD monitor. Especially in a video camera, there is also known a camera, wherein an auxiliary photographing section that photographs a wide angle image for viewfinder display is provided independently of a recording-purpose image pickup section. In addition, Japanese Unexamined Patent Application Publication No. Hei-5-145818 is listed as an example of the above-described camera.

Incidentally, the conventional single lens reflex camera includes a TTL (Through The Lens) optical viewfinder that observes an image of a subject with a reflected light from a movable mirror disposed on a photographing optical path. With such an optical viewfinder, the state of a subject through an optical shooting system can be confirmed as it is, however, when the field angle of the optical shooting system is narrow as in telescopic photographing, the field of view becomes extremely narrow. For this reason, a camera configured to observe a wide angle electronic image from an eyepiece section of the above-described optical viewfinder has also been studied.

In the camera configured to observe a wide angle electronic image from the eyepiece section of the optical viewfinder, the display area of an electronic image usually does not coincide with the field angle of the optical shooting system, so it is requested that the field angle of the optical shooting system can be known on an electronic image.

Moreover, in the camera configured to observe a wide angle electronic image from the eyepiece section of the optical viewfinder, if the display of an electronic image of the viewfinder can be switched depending on the situation, the convenience of a camera will be improved further.

SUMMARY

The present invention has been made to solve at least one of the above-described problems of the prior art. One of the objects of the present invention is to provide a means capable of confirming the state of field and the photographing area of an image pickup section in a camera capable of observing an electronic image through an optical viewfinder.

Moreover, one of the objects of the present invention is, in a camera capable of observing an electronic image through an optical viewfinder, to provide a means capable of acquiring various kinds of information depending on the situation without detaching eyes from the viewfinder.

A camera according to a first invention includes a first image pickup section that photographs a recording-purpose image, a viewfinder optical system, a second image pickup section, a mounting section, a display processing section, a

displaying section, and a controlling section. The viewfinder optical system has an eyepiece section that can observe an optical image of a subject with a light flux from a photographing optical path of the first image pickup section. The second image pickup section photographs a view confirming image from an optical path different from that of the first image pickup section. The mounting section can mount and dismount an interchangeable lens and acquires focal-length information of an interchangeable lens. The display processing section executes display processing that superimposes a frame indicating a range of a field angle of the first image pickup section, onto the view confirming image. The displaying section provides the eyepiece section with the view confirming image having been processed with the display processing. The controlling section switches between a first state to provide the eyepiece section with the optical image and a second state to provide the eyepiece section with the view confirming image. Then, the displaying section changes a size of a frame based on the focal-length information when in the second state.

According to a second aspect of the invention, a camera includes a first image pickup section that photographs a recording-purpose image, a viewfinder optical system, a second image pickup section, a mounting section, a display processing section, a displaying section, and a controlling section. The viewfinder optical system has an eyepiece section that can observe an optical image of a subject with a light flux from a photographing optical path of the first image pickup section. The second image pickup section photographs a view confirming image from an optical path different from that of the first image pickup section. The mounting section can mount and dismount an interchangeable lens and acquires focal-length information of an interchangeable lens. The display processing section executes display processing that superimposes a frame indicating a range of a field angle of the first image pickup section, onto the view confirming image. The displaying section provides the eyepiece section with the view confirming image having been processed with the display processing. The controlling section switches between a first state to provide the eyepiece section with the optical image and a second state to provide the eyepiece section with the view confirming image. Then, the displaying section fixes the size of the frame when in the second state and also changes the display of the view confirming image based on the focal-length information.

According to a third aspect of the invention, in the first or second aspect of the invention the camera further includes a zooming section. The zooming section adjusts a display area of the view confirming image by optically or electronically changing a magnifying power of the second image pickup section.

According to a fourth aspect of the invention, in the third aspect of the invention the displaying section performs a warning indication indicative of a limit of the variable range of the magnifying power on a telescopic side or on a wide-angle side of the zooming section, based on the focal-length information.

According to a fifth aspect of the invention, in the first or second aspect of the invention the display processing section adjusts a display area by distorting the view confirming image by image processing.

According to a sixth aspect of the invention, in the first or second aspect of the invention the display processing section executes display processing that superimposes an indication indicative of a focal length of the second image pickup section onto the view confirming image.

According to a seventh aspect of the invention, in the first or second aspect of the invention the camera further includes a calculating section. The calculating section calculates parallax between the first image pickup section and the second image pickup section based on the focal-length information. Then, the display processing section electronically corrects the position of the frame with respect to the view confirming image based on a data of the parallax.

According to an eighth aspect of the invention, in the first or second aspect of the invention the camera further includes a calculating section. The calculating section calculates parallax between the first image pickup section and the second image pickup section based on the focal-length information. Then, the display processing section electronically corrects a display area of the view confirming image based on a data of the parallax.

According to a ninth aspect of the invention, a camera includes a first image pickup section that photographs a recording-purpose image, a viewfinder optical system, a second image pickup section, a zooming section, a displaying section, and a controlling section. The viewfinder optical system has an eyepiece section that can observe an optical image of a subject with a light flux from a photographing optical path of the first image pickup section. The second image pickup section photographs a view confirming image from an optical path different from that of the first image pickup section. The zooming section adjusts a display area of the view confirming image by electronically changing a magnifying power of the second image pickup section. The displaying section provides the eyepiece section with the view confirming image. The controlling section switches between a first state to provide the eyepiece section with the optical image and a second state to provide the eyepiece section with the view confirming image.

A camera according to a tenth invention includes a first image pickup section that photographs a recording-purpose image, a viewfinder optical system, a second image pickup section, a displaying section, and a controlling section. The viewfinder optical system has an eyepiece section that can observe an optical image of a subject with a light flux from a photographing optical path of the first image pickup section. The second image pickup section photographs a view confirming image from an optical path different from that of the first image pickup section. The displaying section provides the eyepiece section with the view confirming image. The controlling section switches between a first state to provide the eyepiece section with the optical image and a second state to provide the eyepiece section with the view confirming image and also causes the displaying section to display the recording-purpose image after photographing of the recording-purpose image.

A camera according to an eleventh invention includes a first image pickup section that photographs a recording-purpose image, a viewfinder optical system, a second image pickup section, a displaying section, and a controlling section. The viewfinder optical system has an eyepiece section that can observe an optical image of a subject with a light flux from a photographing optical path of the first image pickup section. The second image pickup section photographs a view confirming image from an optical path different from that of the first image pickup section. The displaying section provides the eyepiece section with the view confirming image. The controlling section switches between a first state to provide the eyepiece section with the optical image and a second state to provide the eyepiece section with the view confirming image and also causes the displaying section to display at least one of a reproduced image of the recording-purpose image and a setting screen of the camera when in the second state.

In addition, the camera of the present invention does not necessarily need to incorporate the image pickup section for photographing a view confirming image. For example, a camera which photographs a view confirming image using an external camera unit and also provides an eyepiece section with a view confirming image received from the camera unit, and a camera system including the above-described camera and camera unit are also included in a specific embodiment of the present invention.

BRIEF DESCRIPTION OF THE DRAWINGS

FIG. **1** is an explanatory view of a photographing mechanism of an electronic camera in a first embodiment;

FIG. **2** is a front view of a camera body in the first embodiment;

FIG. **3** is a block diagram of the camera body in the first embodiment;

FIG. **4** is a flow chart showing the operation of the electronic camera regarding a wide preview display in the first embodiment;

FIG. **5** is a view showing a display state of an optical image of a subject in a viewfinder optical system;

FIG. **6** is a flow chart showing an example of the wide preview display processing in FIG. **4**;

FIG. **7** is a view showing a state of the camera body during the wide preview display;

FIG. **8** is an explanatory view of a correspondence between a view confirming image and a photographing area of a first image pickup section;

FIG. **9** is a view showing an example of a view confirming image in the wide preview display;

FIG. **10** is a view showing a display state of a view confirming image when zooming the scene of FIG. **9** to a telescopic side;

FIG. **11** is a view showing a display state of a view confirming image when zooming the scene of FIG. **9** to a wide-angle side;

FIG. **12** is an explanatory view showing a display area when distorting a view confirming image;

FIG. **13** is an explanatory view of a photographing mechanism of an electronic camera in a second embodiment;

FIG. **14** is a perspective view showing a state where a movable member is in a second position;

FIG. **15** is an explanatory view of a photographing mechanism of an electronic camera system in a third embodiment; and

FIG. **16** is a block diagram of the electronic camera system in the third embodiment.

DETAILED DESCRIPTION OF THE EMBODIMENTS

Description of First Embodiment

Hereinafter, the structure of a single lens reflex electronic camera of a first embodiment will be described with reference to the accompanying drawings.

FIG. **1** is a view illustrating a photographing mechanism of the electronic camera in the first embodiment. Moreover, FIG. **2** is a front view of a camera body in the first embodiment. The electronic camera of the first embodiment includes a camera body **11**, and a lens unit **12** that houses an optical shooting system.

A pair of mounts **13**, **14** serving as male and female mounts is provided in the camera body **11** and the lens unit **12**, respectively. The lens side mount **14** is coupled with the camera side mount **13** by means of a bayonet mechanism or the like, whereby the lens unit **12** is interchangeably attached to the camera body **11**. Moreover, electric contacts (not shown) are provided in the above-described mounts **13**, **14**, respectively. When the camera body **11** is connected to the lens unit **12**, contact between the electric contacts results in the establishment of electrical connection between the both.

First, the structure of the lens unit **12** is described. The lens unit **12** includes a zoom lens **15**, a zoom encoder **15***a*, a focus lens **16**, a lens driving section **16***a*, an aperture **17**, an aperture driving section **17***a*, and a lens microcomputer **18**. In addition, the zoom encoder **15***a*, the lens driving section **16***a*, and the aperture driving section **17***a* are connected to the lens microcomputer **18**, respectively.

The zoom lens **15** is a lens for adjusting a focal length, and is movable forward and backward in the optical axis direction in response to the operation of a zoom ring (not shown). Moreover, the zoom encoder **15***a* for detecting a position in the optical axis direction of the lens is attached to the zoom lens **15**.

The focus lens **16** is a lens for adjusting a focus position and is movable forward and backward in the optical axis direction. The lens driving section **16***a* drives the focus lens **16** by a motor (not shown) and outputs a position in the optical axis direction of the focus lens **16** to the lens microcomputer **18**.

The aperture **17** adjusts the amount of light incident upon the camera body **11** by opening and closing aperture blades. The aperture driving section **17***a* controls the opening of the aperture **17** by a motor (not shown).

The lens microcomputer **18** communicates with the camera body **11** via the electric contact of the mount **14** and carries out various controls in the lens unit **12**. Moreover, the lens microcomputer **18** transmits a lens data and the like recorded on a ROM (not shown) to the camera body **11**.

Incidentally, the lens unit **12** shown in FIG. **1** is just an example of the structure of a typical zoom lens unit. Thus, other than the above-described lens unit **12**, for example, a lens unit without the lens microcomputer **18**, a lens unit of a single focal lens, and the like can be attached to the camera body **11** of the first embodiment.

Next, the structure of the photographing mechanism of the camera body **11** is described. The camera body **11** includes a main mirror **21**, a mechanical shutter **22**, a first image sensor **23**, a sub mirror **24**, a focal point detecting section **25**, a viewfinder optical system (**32** to **35**), a photometry section **26**, a superimposing section (SI section) **27**, an in-viewfinder monitor **28**, an interchangeable lens **29**, and a second image sensor **30**.

The main mirror **21**, the mechanical shutter **22**, and the first image sensor **23** are disposed along the optical axis of the optical shooting system. The sub mirror **24** is disposed behind the main mirror **21**. Moreover, the viewfinder optical system, the photometry section **26**, the SI section **27**, the in-viewfinder monitor **28**, the lens **29**, and the second image sensor **30** are disposed in an upper part of the camera body **11**. Moreover, the focal point detecting section **25** is disposed in a lower region of the camera body **11**. In addition, a hot shoe **31** for attaching a flash emission device or the like is provided in an upper part of the camera body **11**.

The main mirror **21** is rotatably supported by means of a non-illustrated rotating shaft, and is switchable between an observation state and a retreated state. The main mirror **21** in the observation state is inclined and disposed in front of a mechanical shutter **22** and the first image sensor **23**. The main mirror **21** in this observation state reflects a light flux passing through the optical shooting system upwards and leads the same to the viewfinder optical system. Moreover, a center part of the main mirror **21** is a half mirror. Then, a part of the light flux that is transmitted through the main mirror **21** is refracted downward by means of the sub mirror **24** and is led to the focal point detecting section **25**. In addition, the focal point detecting section **25** detects an image shift amount of a subject image, the subject image being divided by a non-illustrated separator lens, for each AF area and carries out focus detection according to the so-called phase difference detecting method.

On the other hand, the main mirror **21** in the retreated state is positioned away from the photographing optical path by being flipped upward together with the sub mirror **24**. When the main mirror **21** is in the retreated state, a light flux passing through the optical shooting system is led to the mechanical shutter **22** and the first image sensor **23**.

The viewfinder optical system includes a diffusing screen (focal plane plate) **32**, a condenser lens **33**, a pentagonal prism **34**, and an eyepiece lens **35**. The pentagonal prism **34** among the optical elements of the viewfinder optical system is housed in a position of an overhang part **11***a* of the camera body **11**.

The diffusing screen **32** is positioned above the main mirror **21**, and a light flux reflected by the main mirror **21** in the observation state forms an image onto the diffusing screen **32** once. The light flux forming an image on the diffusing screen **32** passes through the condenser lens **33** and the pentagonal prism **34**, and is led to an exit plane having an angle of 90° with respect to an incident plane of the pentagonal prism **34**. Then, the light flux from the exit plane of the pentagonal prism **34** will reach a user's eye via the eyepiece lens **35**. In addition, a plane opposite to the exit plane of the pentagonal prism **34** serves as a half mirror.

The photometry section **26** has a light-receiving plane in which photo detectors are disposed in two dimensions. Then, the photometry section **26** causes a part of the light flux forming an image on the diffusing screen **32** to re-form an image onto the light-receiving plane, whereby a photographing screen is divided into a plurality of portions according to a light flux passing through the optical shooting system, thus allowing photometry. In addition, the photometry section **26** is disposed in the vicinity of the pentagonal prism **34**.

The SI section **27** carries out superimposing display (SI display), which superimposes the position of an AF area during photographing onto an optical image of the viewfinder optical system, by irradiating the diffusing screen **32** with an illumination light.

The in-viewfinder monitor **28** is disposed facing the half mirror plane (plane opposite to the exit plane) of the pentagonal prism **34**. A view confirming image to be described below and the like are displayed on the in-viewfinder monitor **28**.

The lens **29** is exposed to an exterior of the camera body **11** and is interchangeably attached to a lens fixing section **29***a* of the camera body **11**. Moreover, the second image sensor **30** directly photographs a subject via the lens **29**. The second image sensor **30** can photograph a subject from an optical path different from that in the first image sensor **23** that photographs with a light flux passing through the lens unit **12**. In addition, the field angle of the lens **29** is set so as to be a wider angle than the field angle of the lens unit **12**.

Moreover, the lens **29** and the second image sensor **30** of the first embodiment are housed in the overhang part **11***a* of the camera body **11**. As shown in FIG. **2**, the overhang part **11***a* of the camera body **11** is positioned substantially in a middle portion on the upper surface side of the camera body

11, and is formed in a shape projecting upward of the camera body **11**. That is, because the positions of the lens **29** and second image sensor **30** are away from the position of the mount **13** of the camera body **11**, it is less likely that the light flux from a subject is blocked by a lens-barrel of the lens unit **12** to produce shading.

Here, in the first embodiment, the following description is made assuming an example in which the lens **29** having an optical zoom function and AF function is attached to the lens fixing section **29***a*. In addition, because the zoom mechanism and AF mechanism in the lens **29** are basically in common with those in the lens unit **12**, the duplicated description is omitted. Moreover, in FIG. **1**, for simplicity of description, the lens **29** is shown as one lens.

Next, the circuit configuration of the electronic camera is described. FIG. **3** is a block diagram of the camera body of the first embodiment. The camera body **11** includes a first image pickup section **41**, a second image pickup section **42**, a memory **43**, a recording I/F **44**, a displaying I/F **45**, a main monitor **46**, an external I/F **47**, an operation section **48**, a power supplying section **49**, and a CPU **50**, and a system BUS **51**, in addition to the focal point detecting section **25**, the photometry section **26**, the SI section **27**, and the in-viewfinder monitor **28**. Here, the first image pickup section **41**, the memory **43**, the recording I/F **44**, the displaying I/F **45**, the external I/F **47**, and the CPU **50** are connected to one another via the system BUS **51**. In addition, the CPU **50** is also connected to an electric contact of the mount **13** and an electric contact of the hot shoe **31** (illustrations thereof are omitted in FIG. **3**).

The first image pickup section **41** includes the first image sensor **23**, a first analog processing section **41***a*, and a first digital processing section **41***b*.

The first image sensor **23** is a sensor for generating an intended image that is a recording-purpose image. The first image sensor **23** photoelectrically converts a light flux passing through the lens unit **12** during release period and outputs an analog image signal of the intended image. An output signal of the first image sensor **23** is input to the first analog processing section **41***a*. In addition, the first image sensor **23** can also output a through image by pixel skipping and reading at predetermined intervals during standby for photographing (during non-release period). Thus, when the main mirror **21** is in the retreated position, the CPU **50** can also determine a photographing condition based on the through image of the first image sensor **23**.

The first analog processing section **41***a* is an analog front end circuit that includes a CDS circuit, a gain circuit, an analog-to-digital conversion circuit, and the like. The CDS circuit reduces the noise component of an output of the first image sensor **23** by correlation double sampling. The gain circuit outputs an input signal by amplifying the input signal. This gain circuit can adjust the image pickup sensitivity that is equivalent to ISO sensitivity. The analog-to-digital conversion circuit analog-to-digital converts an output signal of the first image sensor **23**. In addition, in FIG. **3**, the illustration of the respective circuits of the first analog processing section **41***a* is omitted.

The first digital processing section **41***b* carries out various kinds of image processings (defective pixel correction, color interpolation processing, gray scale conversion processing, white balance adjustment, edge enhancement, and the like) to the output signal of the first analog processing section **41***a* to generate a data of the intended image. Moreover, the first digital processing section **41***a* carries out compression and expansion processing and the like of the data of the intended image. The first digital processing section **41***a* is connected to the system BUS **51**.

The second image pickup section **42** includes the second image sensor **30**, a second analog processing section **42***a*, and a second digital processing section **42***b*. In addition, because the configuration of the second image pickup section **42** substantially corresponds to the configuration of the first image pickup section **41**, a part of the description regarding the duplicated portion between the both is omitted.

The second image sensor **30** photographs a view confirming image used for the viewfinder. The second image sensor **30** photoelectrically converts a subject image formed passing through the lens **29**, at predetermined intervals and outputs a through image (view confirming image). An output signal of the second image sensor **30** is input to the second analog processing section **42***a*.

The second analog processing section **42***a* is an analog front end circuit that includes a CDS circuit, a gain circuit, an analog-to-digital conversion circuit, and the like. The second digital processing section **42***b* carries out color interpolation processing and the like of the through image. In addition, a data of the through image output from the second digital processing section **42***b* is input to the CPU **50**.

The memory **43** is a buffer memory for temporarily recording the data of an intended image in a preceding step, a subsequent step, or the like of the image processing by the first digital processing section **41***b*.

A connector for connecting a recording medium **52** is formed in the recording I/F **44**. Then, the recording I/F **44** carries out writing/reading of a photographic image data to/from the recording medium **52** connected to the connector. The above-described recording medium **52** is configured with a hard disk, a memory card containing a semiconductor memory, and the like. In addition, FIG. **3** illustrates a memory card as an example of the recording medium **52**.

The displaying I/F **45** controls the display of the main monitor **46** based on an instruction from the CPU **50**. The main monitor **46** is disposed at the back part of the camera body **11** and the like, for example. The main monitor **46** displays various kinds of images in response to instructions from the CPU **50** and displaying I/F **45**. For example, the main monitor **46** can display the reproduced image of an intended image, a menu screen capable of receiving GUI (Graphical User Interface) type inputs, and the like (illustration of each of the above-described images is omitted).

The external I/F **47** includes connection terminals compliant with a serial communications standard, such as USB (Universal Serial Bus). Then, the external I/F **47** controls data transmission and reception with a computer connected via the connection terminal, according to the above-described telecommunications standard.

The operation section **48** includes a plurality of switches for accepting the operations of a user. For example, the operation section **48** includes a release button **48***a*, a mode dial **48***b*, a wide preview button **48***c*, an aperture preview button **48***d*, and a zoom switch **48***e*.

The release button **48***a* accepts an instruction input for starting an AF operation before photographing and an instruction input for starting an exposure operation during photographing, from a user. The mode dial **48***b* accepts an input for switching the photographing modes, from a user. The wide preview button **48***c* accepts from a user an operation for switching between the viewfinder display of an optical image by means of the viewfinder optical system and the display of a view confirming image (wide preview display) by means of the in-viewfinder monitor **28**. The aperture preview button

48*d* accepts from a user a confirming input for confirming the range of depth of field. If there is this confirming input, the aperture **17** is squeezed down and a user can confirm the range of depth of field by means of the viewfinder optical system. The zoom switch **48***e* accepts from a user an operation for optically or electronically increasing/decreasing the magnifying power of the view confirming image.

The power supplying section **49** supplies the electric power of a non-illustrated battery to each part of the camera body **11**. Moreover, the power supplying section **49** detects the remaining amount of battery based on the battery voltage.

The CPU **50** carries out an overall control of each part of the electronic camera. Moreover, the CPU **50** functions as a sequence control section **50***a*, a photograph setting section **50***b*, a display processing section **50***c*, and a face detecting section **50***d*, by means of programs stored in a non-illustrated ROM.

The sequence control section **50***a* carries out operation control and the like of the lens unit **12**, the main mirror **21**, the mechanical shutter **22**, the first image pickup section **41**, the second image pickup section **42**, and the like. Moreover, the sequence control section **50***a* carries out control for switching between the finder display by means of the viewfinder optical system and the wide preview display, in response to the operation of the wide preview button **48***c*. In addition, the sequence control section **50***a* functions also as an emission control section that carries out emission control of an external flash emission device (not shown).

The photograph setting section **50***b* carries out an automatic exposure (AE) calculation, an auto white balance (AWB) calculation, and the like, while carrying out autofocus (AF), and determines various kinds of parameters (exposure time, aperture value, image pickup sensitivity, and the like) of the photographing condition of the first image pickup section **41**. Moreover, the photograph setting section **50***b* is also responsible for processings regarding AF, AE, and AWB of the second image pickup section **42**.

More specifically, the photograph setting section **50***b* calculates a defocusing amount (deviation amount from a focus position and the direction thereof) of the focus lens **16** for each AF area based on an image phase difference amount in the focal point detecting section **25**. Moreover, the photograph setting section **50***b* carries out the AE calculation and AWB calculation based on an output of the photometry section **26**. In addition, the photograph setting section **50***b* can also carry out each calculation of the AF, AE, and AWB based on the data of a through image of the first image sensor **23** or the second image sensor

The display processing section **50***c* performs various kinds of image processings on the data of the through image of the second image pickup section **42**. In addition, a view confirming image output from the display processing section **50***c* is displayed on the in-viewfinder monitor **28**.

The face detecting section **50***d* performs the well-known face detection processing on the data of the through image of the second image pickup section **42**, and detects the face area of a subject contained in the view confirming image. For example, the face detecting section **50***d* extracts the face area by an extraction processing of the characteristic points of a face described in Japanese Unexamined Patent Application Publication No. 2001-16573 and the like. The above-described characteristic points include each end point of the eyebrow, eye, nose, and lip, a contour point of the face, a vertex of the head, a lower end point of the jaw, and the like, for example. Or, as in Japanese Unexamined Patent Application Publication No. 8-63597, the face detecting section **50***d* may extract the contour of a skin-colored region based on color information on a subject, and detect the face by further performing the matching with the template of a face component that is prepared in advance.

Hereinafter, the operation of the electronic camera regarding the wide preview display in the first embodiment is described with reference to a flow chart of FIG. **4**.

Step **101**: when a user turns on the power of the camera body **11**, the CPU **50** will start to supply power to the second image sensor **30**. In the stage of S**101**, the main mirror **21** is in the observation position. Accordingly, a user can observe from the eyepiece lens **35** a subject image formed by a light flux that passed through the lens unit **12**. In addition, FIG. **5** shows a display state of an optical image of a subject in the viewfinder optical system.

Step **102**: the CPU **50** determines whether or not the wide preview button **48***c* is being pressed. If the wide preview button **48***c* is being pressed (YES side), the flow moves to S**103**. On the other hand, if the wide preview button **48***c* is not being pressed (NO side), the flow moves to S**120**.

Step **103**: the CPU **50** determines whether or not the SI section **27** is performing SI display of an AF area while the wide preview button **48***c* is pressed. If the SI display is being performed (YES side), the flow moves to S**104**. On the other hand, if the SI display is not being performed (NO side), the flow moves to S**105**.

Step **104**: the CPU **50** instructs the SI section **27** to stop the SI display. This is because an optical image by the viewfinder optical system is not displayed in the wide preview display and thus the SI display is not required.

Step **105**: the CPU **50** performs a setting operation of the photographing condition. Specifically, the CPU **50** executes AF based on an output of the focal point detecting section **25**. Moreover, the CPU **50** executes the AE calculation and AWB calculation based on an output of the photometry section **26**. In addition, in S**105**, the SI display of an AF area by the SI section **27** is not performed.

Step **106**: the CPU **50** executes wide preview determination control to determine whether or not it is the case where the wide preview display is prohibited.

Specifically, if the case corresponds to any of the following conditions: (1) when light emission by the flash-emission device is performed during photographing and (2) when the brightness of field is below a threshold, then the CPU **50** turns on a flag for prohibiting the wide preview display.

Step **107**: the CPU **50** determines whether or not the flag for prohibiting the wide preview display has been turned on in the wide preview determining control (S**106**). If the wide preview display is prohibited (YES side), the flow moves to S**120**. On the other hand, if the wide preview display is allowed (NO side), the flow moves to S**108**.

Step **108**: the CPU **50** stops the operations of the focal point detecting section **25** and photometry section **26** before starting the wide preview display. This is because the focal point detecting section **25** and the photometry section **26** will be unable to function by the below-described light shielding operation during wide preview display.

Step **109**: the CPU **50** performs the light shielding operation to cut off the incident light from the lens unit **12** onto the viewfinder optical system.

Specifically, the CPU **50** moves the main mirror **21** from the observation position to the retreated position to cut off the incident light onto the viewfinder optical system. In addition, if the brightness of field is sufficiently low, the CPU **50** may cut off the incident light onto the viewfinder optical system by squeezing down the aperture **17**.

Step **110**: the CPU **50** acquires lens information (the lens positions and the like of the zoom lens **15** and the focus lens **16**) from the lens unit **12**.

Step **111**: the CPU **50** executes AF of the lens **29** based on the lens position of the focus lens **16** among the lens information in S**110**. In addition, if the lens **29** is of a pan-focus type and does not have the AF function, the step of S**111** is omitted.

Step **112**: the CPU **50** initializes the AE and AWB of the second image pickup section **42** based on the photographing condition acquired in S**105**. In addition, after the start of photographing in the second image pickup section **42**, the CPU **50** adjusts the parameters of the AE and AWB of the second image pickup section **42** based on the data of a through image of the second image pickup section **42**.

Step **113**: the CPU **50** performs wide preview display processing for displaying a view confirming image photographed by the second image pickup section **42**, on an in-viewfinder monitor **28**. In addition, a detailed description of the wide preview display processing will be described below using FIG. **6**.

Moreover, FIG. **7** shows a state of the camera body **11** during wide preview display. Since the incident light from the lens unit **12** onto the viewfinder optical system is cut off by the light shielding operation (S**109**) during wide preview display, a user can observe only the view confirming image of the in-viewfinder monitor **28** from the eyepiece lens **35**. Accordingly, a user can observe the field by means of a view confirming image without detaching eyes away from the eyepiece lens **35**. In addition, FIG. **7** shows an example of the light shielding state in which the main mirror **21** is moved to the retreated position during the light shielding operation.

Step **114**: the CPU **50** determines whether or not there is a photographing instruction by pressing of the release button **48***a*. If there is the photographing instruction (YES side), the flow moves to S**115**. On the other hand, if there is no photographing instruction (NO side), the flow moves to S**117**.

Step **115**: the CPU **50** performs photographing processing of an intended image, and thereby photographs the intended image with the first image sensor **23** of the first image pickup section **41**. Subsequently, the first image pickup section **41** generates an image data of the intended image, and the CPU **50** records the image data of the intended image onto the recording medium **52**.

Here, in the photographing processing of the intended image in S**115**, the CPU **50** photographs the intended image based on the photographing condition in S**105** while maintaining the light shielding state. For this reason, the CPU **50** can continue the wide preview display also during the photographing processing of the intended image.

Moreover, the CPU **50** may suspend the wide preview display immediately after photographing of the intended image and display an image used for display corresponding to the intended image (freeze image) onto the in-viewfinder monitor **28** for a predetermined time interval. At this time, a freeze image based on the image data of the intended image is displayed on the in-viewfinder monitor **28**. A user can change the setting of on/off of the display of the above-described freeze image on a menu screen.

In addition, in the photographing processing of the intended image of S**115**, the CPU **50** may operate the focal point detecting section **25** and the photometry section **26** to re-set the photographing condition before photographing. Specifically, the CPU **50** operates the focal point detecting section **25** and the photometry section **26** to re-set the photographing condition before photographing while once releasing the wide preview display and the light shielding state caused by light shielding operation. Then, the CPU **50** photographs the intended image based on the photographing condition re-set immediately before photographing, and resumes the wide preview display after completion of the photographing. In this case, although it takes some time from release to photographing, an excellent intended image can be photographed with the electronic camera based on the photographing condition acquired immediately before photographing.

Step **116**: the CPU **50** determines whether or not the pressing of the wide preview button **48***c* has been released. If the pressing of the wide preview button **48***c* has been released (YES side), the flow moves to S**117**. On the other hand, if the wide preview button **48***c* is being pressed (NO side), the CPU **50** returns to S**113** and continues the wide preview display.

Step **117**: the CPU **50** stops photographing the view confirming image in the second image pickup section **42** and turns off the in-viewfinder monitor **28**.

Step **118**: the CPU **50** releases the light shielding state caused by the light shielding operation. Accordingly, a user can observe again the subject image formed by the light flux that passed through the lens unit **12**, from the eyepiece lens **35**.

Step **119**: the CPU **50** resumes the operations of the focal point detecting section **25** and the photometry section **26**. Moreover, the CPU **50** instructs the SI section **27** to resume the SI display.

Step **120**: the CPU **50** determines whether or not there is an operation to turn off the power of the camera body **11**. If there is the above-described operation (YES side), the flow moves to S**121**. On the other hand, if there is no such operation (NO side), the CPU **50** returns to S**102** and repeats the above-described operations.

Step **121**: the CPU **50** stops to supply power to the second image sensor **30**. Now, the description of the operations according to the flow chart of FIG. **4** has been completed.

Next, the above-described wide preview display processing (S**113**) is specifically described with reference to the flow chart of FIG. **6**. In addition, in the wide preview display processing, the CPU **50** can execute the zooming of the lens **29** or the electronic zooming of a view confirming image by the display processing section **50***c*, in response to a user's operation of the zoom switch **48***e*.

Step **201**: the CPU **50** checks the display setting flag regarding the display setting of the view confirming image. This display setting flag is managed by the CPU **50** and this state is recorded in the memory **43**. If the last display setting can be used, the display setting flag will be turned on, and if the last display setting can not be used, the display setting flag will be turned off. In addition, before starting the wide preview display (in the initial state), the display setting flag is in the state of off.

Step **202**: the CPU **50** determines whether or not the display setting flag (S**201**) is in the state of off. If the display setting flag is off (YES side), the flow moves to S**203**. On the other hand, if the display setting flag is on (NO side), the flow moves to S**206**. In addition, in this case the CPU **50** reads and acquires the below described display setting data from the memory **43**.

Step **203**: the CPU **50** calculates a correspondence between the view confirming image and the range of a field angle of the first image pickup section **41** (photographing area) based on a difference in the field angle between the first image pickup section **41** and the second image pickup section **42**, and the parallax due to the subject distance.

Here, the correspondence between the view confirming image and the photographing area of the first image pickup section **41** is briefly described with reference to FIG. **8**.

In the electronic camera of the first embodiment, the lens unit **12** and the lens **29** are disposed in parallel, and a deviation will occur between the optical axes of the respective lenses. Moreover, the field angle of the lens **29** is set so as to be wider than the field angle of the lens unit **12**. For this reason, a difference will occur between the range of the view confirming image photographed through the lens **29** and the photographing area of the first image pickup section **41** through the lens unit **12**.

The correspondence between the view confirming image and the photographing area of the first image pickup section **41** changes depending on the field angles of the lens unit **12** and lens **29** and the subject distance. As an example, a case where the lens unit **12** is zoomed to the telescopic side is described with reference to FIG. **8** (*a*). Here, in FIG. **8** (*a*), the field angle of the lens **29** is indicated by the dotted line. Moreover, the field angle of the lens unit **12** before zooming to the telescopic side is indicated by the dashed dotted line, and the field angle of the lens unit **12** after zooming to the telescopic side is indicated by the two-dot chain line. When the lens unit **12** is zoomed to the telescopic side, the field angle of the lens unit **12** after zooming to the telescopic side will be narrowed as compared with that before zooming to the telescopic side. For this reason, the photographing area of the first image pickup section **41** in the view confirming image will be relatively smaller as compared with that before the zooming.

Moreover, since the effect of parallax will increase as the subject distance becomes nearer even if the field angles of the lens unit **12** and lens **29** are fixed, the relationship between the both will change. As an example, a correspondence between the view confirming image and the photographing area of the first image pickup section **41** when the subject distances are different is described with reference to FIG. **8**(*b*). Here, in FIG. **8**(*b*), the field angle of the lens **29** is indicated by the dotted line. Moreover, the field angle of the lens unit **12** is indicated by the dashed dotted line.

In the subject distances B**1** and B**2** of FIG. **8** (*b*), if the subject is far away (B**1**), the amount of deviation of the optical axis is relatively small compared to the entire photographing area of the subject. For this reason, the positional deviation of the subject image between each lens is relatively small. On the other hand, if the subject is at a near position (B**2**), the amount of deviation of the optical axis is relatively large compared to the entire photographing area of the subject. For this reason, the deviation of the subject image between each lens is relatively large. In other words, when the subject distance is B**2**, the photographing area of the first image pickup section **41** in the view confirming image will shift to the lower side as compared with the case where the subject distance is B**1**.

For this reason, the CPU **50** executes the following calculations in S**203**. First, the CPU **50** calculates the subject distance from the position of the focus lens **16** of the lens unit **12** (or the position of a focus lens contained in the lens **29**). Next, the CPU **50** calculates the field angles of the first image pickup section **41** and the second image pickup section **42**, respectively, based on the data of the focal length of the zoom lens **15** and the data of the focal length of the lens **29**. Then, the CPU **50** calculates the range of a view confirming image coinciding with the photographing area of the first image pickup section **41** based on the distance (base length) between the optical axis of the lens unit **12** and the optical axis of the lens **29**, the field angles of the first image pickup section **41** and second image pickup section **42**, and the subject distance.

Step **204**: the CPU **50** determines the limit range of zooming regarding the second image pickup section **42** based on the calculation result of S**203**.

For example, if a portion coinciding with the photographing area of the first image pickup section **41** in the view confirming image is larger than an upper limit value, the CPU **50** restricts the zoom operation on the telescopic side regarding the second image pickup section **42**. In other words, in the above-described case, an increase in the magnifying power of the view confirming image by means of the optical zoom of the lens **29** or the electronic zoom of the second image pickup section **42** will be restricted. This is because if the field of view of the view confirming image comes too close to the photographing area of the first image pickup section **41**, a user can not observe a wide range of field and thus a benefit of the wide preview display will be lost.

On the other hand, if a portion coinciding with the photographing area of the first image pickup section **41** in the view confirming image is smaller than a lower limit value, the CPU **50** restricts the zoom operation on the wide-angle side regarding the second image pickup section **42**. In other words, in the above-described case a reduction in the magnifying power of the view confirming image by means of the optical zoom of the lens **29** will be restricted. This is because if the field of view of the view confirming image is significantly large as compared with the photographing area of the first image pickup section **41***a* user can not know the state of field in the wide preview display.

Step **205**: the CPU **50** records a data of the range of the view confirming image coinciding with the photographing area of the first image pickup section **41** (S**203**), and a data of the limit range (S**204**) of zooming regarding the second image pickup section **42**, into the memory **43** as a data of the display setting of the view confirming image. Subsequently, the CPU **50** changes the display setting flag (S**201**) to the state of on.

Step **206**: the CPU **50** photographs a view confirming image with the second image sensor **30** of the second image pickup section **42**. Then, the second image pickup section **42** outputs a data of the view confirming image to the CPU **50**.

Step **207**: the display processing section **50***c* of the CPU **50** causes the in-viewfinder monitor **28** to display the view confirming image. FIG. **9** shows an example of the display of the view confirming image corresponding to the scene of FIG. **5**. Since the field angle of the lens **29** has a wider angle than the field angle of the lens unit **12**, the view confirming image can display the subject in a wider range than an optical image of the viewfinder optical system can. In addition, in S**207**, the display processing section **50***c* performs the following display processings: (1) to (3).

(1) The display processing section **50***c* overlappingly displays a frame indicative of a range of the field angle of the first image pickup section **41** (photographing area) onto a view confirming image by means of an on-screen function (see FIG. **9**). Here, the display processing section **50***c* performs the above-described frame display based on a data of the range of the view confirming image coinciding with the photographing area of the first image pickup section **41** (S**203**). This allows a user to know clearly the photographing area of the first image pickup section **41** even during wide preview display. In addition, in the first embodiment, the display processing section **50***c* makes adjustment by changing the size and position of the frame with respect to a view confirming image in the case where the zooming state or the like changes (see FIG. **10** and FIG. **11**).

(2) The display processing section **50***c* overlappingly displays an indication of a numerical value of the focal length of the lens **29** onto a view confirming image by means of an on-screen function (see FIG. **9**). This allows a user to know, on the view confirming image, what type of lens **29** is mounted.

(3) The display processing section **50***c* overlappingly displays a zoom bar onto a view confirming image by means of an on-screen function (see FIG. **9**). This zoom bar indicates a limit range of zooming regarding the second image pickup section **42** (S**204**) and the current zooming state of the second image pickup section **42**. This allows a user to easily know to what extent the magnifying power of the view confirming image can be changed using the zoom switch **48***e*.

Especially when the current zooming state is at a telescopic edge or at a wide-angle edge in the limit range, the indication of the zoom bar allows a user to know that the zoom operation on the telescopic side or on the wide-angle side is not allowed. Thus, the indication of the zoom bar also functions as a warning indicator when the zoom operation on the telescopic side or on the wide-angle side by means of the zoom switch **48***e* is restricted. In addition, when the zoom operation by means of the zoom switch **48***e* is restricted, the display processing section **50***c* may further display on the in-viewfinder monitor **28** a warning indicator different from the zoom bar (illustration of the warning indicator in this case is omitted).

Step **208**: the CPU **50** determines whether or not there is an effective zoom operation by means of the zoom switch **48***e*. Here, when the current zooming state is at the telescopic edge or at the wide-angle edge in the limit range, the CPU **50** will cancel the zoom operation outside the limit range as an invalid operation. If there is the above-described effective zoom operation (YES side), the flow moves to S**209**. On the other hand, if there is no above-described effective zoom operation (NO side), the flow moves to S**211**.

Step **209**: the CPU **50** performs zoom processing regarding the second image pickup section **42** in response to an input from the zoom switch **48***e*. For example, the CPU **50** executes optical zoom by adjusting the lens position of the lens **29**. Alternatively, the display processing section **50***c* of the CPU **50** executes electronic zoom by changing the setting of resolution of the view confirming image.

Step **210**: the CPU **50** changes the display setting flag to the off-state and returns to S**201**. Then, before photographing the next frame in the second image pickup section **42**, the CPU **50** will change the display setting of the view confirming image again (S**202** to S**205**). Accordingly, in the next frame of the view confirming image, the display processing section **50***c* can execute the frame display reflecting the zoom processing (S**209**) regarding the second image pickup section **42**.

Specifically, in conjunction with zooming of the view confirming image by means of the zoom switch **48***e*, the display processing section **50** changes the size of the frame indicative of the photographing area of the first image pickup section **41**. Then, the display processing section **50** shifts the position of the frame display vertically according to the magnitude of parallax. Here, a display state of the view confirming image when the scene of FIG. **9** is zoomed to the telescopic side is shown in FIG. **10**. Moreover, a display state of the view confirming image when the scene of FIG. **9** is zoomed to the wide-angle side is shown in FIG. **11**.

Here, the display processing section **50***c* may fix the frame display to a predetermined position by partially cutting out the view confirming image and displaying the same on the in-viewfinder monitor **28**. For example, the display processing section **50***c* shifts the cut-out position of the view confirming image corresponding to the magnitude of parallax, thereby fixing the position of a frame displayed on the in-viewfinder monitor **28** to the center. Accordingly, a user can always easily know the photographing area of the first image pickup section **41** during wide preview display.

Step **211**: the CPU **50** determines whether or not there is a change in the lens position of the zoom lens **15** of the lens unit **12** (whether the lens unit **12** has been zoomed). If the lens unit **12** has been zoomed (YES side), the flow moves to S**212**. On the other hand, if the lens unit **12** has not been zoomed (NO side), the flow moves to S**214**.

Step **212**: the CPU **50** re-acquires the lens information regarding the lens position of the zoom lens **15** from the lens unit **12**.

Step **213**: the CPU **50** changes the display setting flag to the off-state and returns to S**201**. Then, before photographing the next frame in the second image pickup section **42**, the CPU **50** changes the display setting of the view confirming image again (S**202** to S**205**). Accordingly, in the next frame of the view confirming image, as in the above-described S**210** the display processing section **50***c* can execute the frame display that reflects zooming of the lens unit **12**. In addition, in this case, while the field of view of the view confirming image is the same as that of the previous frame, the size and position of the frame display will change in the next frame (illustration of the view confirming image in this case is omitted).

Step **214**: the CPU **50** determines whether or not a displaying operation of the menu screen has been received from a user via the operation section **48**. If a displaying operation of the menu screen has been received (YES side), the flow moves to S**215**. On the other hand, if there is no displaying operation of the menu screen (NO side), the flow moves to S**216**.

Step **215**: the CPU **50** suspends displaying of the view confirming image and displays a menu screen on the in-viewfinder monitor **28**. Accordingly, a user can perform a setting operation on the menu screen without detaching eyes away from the eyepiece section during wide preview display. In addition, after completion of the operation on the menu screen, the CPU **50** returns to S**114**.

Step **216**: the CPU **50** determines whether or not an operation for a reproducing display of the intended image has been accepted from a user via the operation section **48**. If the operation for the reproducing display has been accepted (YES side), the flow moves to S**217**. On the other hand, if there is no operation for the reproducing display (NO side), the CPU **50** returns to S**114**.

Step **217**: the CPU **50** suspends displaying of the view confirming image and executes the reproducing display of the intended image. This allows a user to view the photographed intended image without detaching eyes away from the eyepiece section during wide preview display. In addition, after completion of the reproducing display of the intended image, the CPU **50** returns to S**114**. Now, the description of the operations according to the flow chart of FIG. **6** has been completed.

Hereinafter, an effect of the first embodiment is described. The electronic camera of the first embodiment photographs a view confirming image from an optical path different from that of the first photographing section **41** by means of the second photographing section **42** and at the same time displays the view confirming image observably from the eyepiece lens **35** by means of the in-viewfinder monitor **28**. Thus, depending on state, a user can selectively observe an optical image by means of the viewfinder optical system and a view confirming image by means of the second image pickup section **42** without detaching eyes away from the eyepiece lens **35**.

Especially when a telescopic lens with a narrow field angle is mounted on the camera body **11**, the field of view of an optical image by means of the viewfinder optical system becomes narrow, however, even in this case a user can appropriately know the state of field by the wide-angle view confirming image. Accordingly, even in the case where a moving subject is telescopically photographed, e.g., in photographing sports and the like, a user can track the subject relatively easily, so that the user is less likely to miss photo opportunity.

Moreover, in the first embodiment, a user can adjust the range of field, which can be confirmed with a view confirming image, by zooming of the lens **29** and electronic zooming of the view confirming image. It is therefore possible to provide a user with a view confirming image appropriate to a scene to be photographed. Especially when the lens **29** is a zoom lens and the view confirming image is optically zoomed, it is possible to provide a user with a clear image as compared with the one in the case of electronic zoom.

Moreover, according to the electronic camera of the first embodiment, a photographing area of the first image pickup section **41** is indicated as a frame display in a view confirming image (S**207**). Accordingly, during wide preview display, a user can observe the state of field by a view confirming image while knowing a range which the first image pickup section **41** can photograph.

Modification of First Embodiment

In the first embodiment, an example has been described, in which the display processing section **50***c* makes adjustment by changing the size and position of the frame with respect to a view confirming image when the zooming state or the like changes. However, the display processing section **50** may fix the size of the frame with respect to a view confirming image to thereby perform the above-described frame display (S**207**) in the following manner: from (1) to (4).

(1) Firstly, a case is described, in which a user zooms the lens unit **12** to the wide-angle side. In this case, the display processing section **50***c* performs geometric conversion processing to the data of a view confirming image and thus adjusts the size of the frame by stretching the view confirming image outwards and distorting the same.

(2) Secondly, a case is described, in which a user zooms the lens unit **12** to the telescopic side. In this case, the display processing section **50***c* performs electronic zooming to the data of a view confirming image and thus adjusts the size of the frame by expanding the view confirming image in accordance with the zooming of the lens unit **12**.

(3) Thirdly, a case is described, in which a user zooms a view confirming image to the wide-angle side by means of the zoom switch **48***e*. In this case, the display processing section **50***c* performs geometric conversion processing to the data of a view confirming image and thus distorts the view confirming image so as to be compressed inwards. Thus, it is possible to make the size of the frame on the in-viewfinder monitor **28** the same before and after zooming while extending the field of view that is displayed on the in-viewfinder monitor **28**.

(4) Fourthly, a case is described, in which a user zooms the view confirming image to the telescopic side by means of the zoom switch **48***e*. In this case, the display processing section **50***c* performs geometric conversion processing to the data of a view confirming image and thus stretches the view confirming image outwards and distorts the same. Thus, it is possible to make the size of the frame on the in-viewfinder monitor **28** the same before and after zoom while narrowing the field of view that is displayed on the in-viewfinder monitor **28**.

In addition, in the above-described case, even if the size of a range corresponding to the field angle of the first image pickup section **41** is fixed on the in-viewfinder monitor **28**, it is possible to display a subject without discontinuity regardless of the zooming state of the first image pickup section **41**. As an example, with reference to FIG. **12**, consider the case where the size of a range corresponding to the field angle of the first image pickup section **41** is fixed on the in-viewfinder monitor **28** while zooming up the first image pickup section **41**. Before zooming in the first image pickup section **41**, the subject from a point A to a point C is displayed continuously in the view confirming image of the in-viewfinder monitor **28**. Here, if the view confirming image on the in-viewfinder monitor **28** is partially digital-zoomed in conjunction with zoom-up in the first image pickup section **41**, the view confirming image on the in-viewfinder monitor **28** will change as follows. First, within the range of the field angle of the first image pickup section **41**, the view confirming image is zoomed to be displayed only to the range of a point A'. On the other hand, if the view confirming image is displayed as it is outside the range of the field angle of the first image pickup section **41**, the view confirming image in the range from the point B to the point C is displayed, and in this case, the subject in the interval from the point A to the point B will be discontinuously displayed. However, if an image is distorted outside the field angle of the first image pickup section **41** as shown by a dashed dotted line in FIG. **12**, the point A' to the point C can be connected and displayed, so that the subject can be displayed continuously without discontinuing the image at a boundary of the field angle of the first image pickup section **41**.

Description of Second Embodiment

FIG. **13** is a view illustrating the photographing mechanism of an electronic camera in a second embodiment. Here, in the following description of the embodiments, constituent elements of the camera are in common with those of the first embodiment and are given the same reference numerals to omit the duplicated description.

The second embodiment is a variation of the first embodiment, showing an example in which the second image pickup section **42** is attached to a movable member **54** that houses an emitting section **53** used for flash photographing. A base side of the movable member **54** is rotatably supported to the camera body **11** with a rotating shaft (not shown). Then, the movable member **54** can rotate with respect to the camera body **11** to thereby switch between a first position and a second position.

When the movable member **54** is in the first position, the movable member **54** is housed in the camera body **11** and the movable member **54** configures a part of the surface of the camera body **11**. On the other hand, when the movable member **54** is in the second position, a tip side of the movable member **54**, to which the second image pickup section **42** and the emitting section **53** are attached; projects from the camera body **11** (see FIG. **14**). Thus, when the movable member **54** is in the second position, the irradiation of a subject with emission of the emitting section **53** and the photographing of a view confirming image by means of the second image pickup section **42** are enabled. Here, the emitting section **53** and the lens **29** of the second image pickup section **42** are disposed side by side on the tip side of the movable member **54**.

In the second embodiment described above, in addition to substantially the same effect as that of the first embodiment, the photographing position of the second image pickup section **42** can be far away from the optical axis of the lens unit

12. It is therefore possible to reduce the possibility of shading of a view confirming image by a lens-barrel of the lens unit **12**, as compared with the case of the first embodiment. Moreover, in the second embodiment, because the second image pickup section **42** can be housed in the camera body **11** when not in use by moving the movable member **54**, sense of design and functionality of the camera body **11** can be enhanced.

Description of Third Embodiment

FIG. **15** is a view illustrating the photographing mechanism of an electronic camera in a third embodiment. Moreover, FIG. **16** is a block diagram of an electronic camera system in the third embodiment. The third embodiment shows an example in which the camera system is configured by externally attaching a camera unit **55**, which photographs a view confirming image, to the camera body **11**.

The camera system of the third embodiment includes the camera body **11** and the camera unit **55**. The camera body **11** in the third embodiment has a configuration substantially common with that of the camera body **11** of the first embodiment, except for not including the lens fixing section **29***a* and the second image pickup section **42**. The camera body **11** carries out communication with the camera unit **55** via the external I/F **47**. In addition, in the third embodiment, the camera unit **55** is mounted in the hot shoe **31** of the camera body **11**.

On the other hand, as shown in FIG. **15**, the camera unit **55** includes a fixing section **56** for engaging with the hot shoe **31**, a lens **57** and a lens fixing section **57***a*, and a position adjusting section **58**. The lens **57** and the lens fixing section **57***a* are mounted on a body part **55***a* of the camera unit **55**. Moreover, the lens **57** is detachable to the lens fixing section **57***a*, and various kinds of interchangeable lenses can be attached to the lens fixing section **57***a*. In addition, the configuration of the above-described lens **57** and lens fixing section **57***a* is substantially in common with the configuration of the lens **29** and lens fixing section **29***a* of the first embodiment.

The position adjusting section **58** is a pedestal-shaped member having the fixing section **56** on its bottom face section, and supports the body part **55***a* of the camera unit **55** slidably in the height direction (vertical direction in the view) of the camera system. The position adjusting section **58** serves for adjusting a distance from the optical axis of the lens **57** of the camera unit **55** to the fixing section **56**. Thus, even if the camera unit **55** is attached to the camera body **11** of a different model, the parallax of the camera unit **55** can be adjusted by adjusting the distance between the optical axis of the optical shooting system and the optical axis of the lens **57** by means of the position adjusting section **58**, so that the compatibility of the camera unit **55** can be increased. Moreover, due to the adjustment of the position of the optical axis of the lens **57** by a user by means of the position adjusting section **58**, it is also possible to prevent the shading of a view confirming image caused by the lens-barrel of the lens unit **12**.

Moreover, as shown in FIG. **16**, the camera unit **55** includes an image pickup section **59**, a CPU **60**, and a communication section **61**. The image pickup section **59** includes an image sensor **59***a*, an analog processing section **59***b*, and a digital processing section **59***c*. The image sensor **59***a* photoelectrically converts a subject image formed passing through the lens **57**, at predetermined intervals and outputs a through image (view confirming image). The output signal of the image sensor **59***a* is input to the analog processing section **59***b*. The analog processing section **59***b* is an analog front end circuit that includes a CDS circuit, a gain circuit, an analog-to-digital conversion circuit, and the like. The digital processing section **59***c* performs color interpolation processing and the like of the through image.

The CPU **60** controls each part of the camera unit **55** based on instructions from the camera body **11**.

The communication section **61** is connected to the external I/F **47** via a cable **62**. The communication section **61** transmits data of a view confirming image to the camera body **11** while receiving an instruction from the camera body **11**.

The operation of a wide preview display by the camera system of the third embodiment is substantially in common with that in the case of the first embodiment except that the camera unit **55** carries out the operation of the second image pickup section **42**, so the detailed description is omitted.

Also with the camera system of the third embodiment described above, substantially the same effect as that of the first embodiment can be obtained.

(Supplementary Notes on Embodiments)

In the above-described embodiments, an example regarding a single lens reflex electronic camera has been mainly described, however, the present invention can be also applied to a film-based camera that photographs an intended image by exposing a subject image onto a film. Moreover, in the above-described embodiments, the lenses **29**, **57** for photographing a view confirming image may be non-interchangeable with respect to the camera body **11** or the camera unit **55**.

The many features and advantages of the embodiments are apparent from the detailed specification and, thus, it is intended by the appended claimed to cover all such features and advantages of the embodiments that fall within the true spirit and scope thereof. Further, since numerous modifications and changes will readily occur to those skilled in the art, it is not desired to limit the inventive embodiments to the exact construction and operation illustrated and described, and accordingly all suitable modifications and equivalents may be resorted to, falling within the scope thereof.

What is ciaimed is:

1. A camera comprising:

a first image pickup section photographing a recording-purpose image;

a viewfinder optical system including an eyepiece section capable of observing an optical image of a subject with a light flux from a photographing optical path of said first image pickup section;

a second image pickup section photographing a view confirming image from an optical path different from that of said first image pickup section;

a mounting section capable of mounting and dismounting an interchangeable lens, and acquiring focal-length information of said interchangeable lens;

a display processing section executing display processing that superimposes a frame indicating a range of a field angle of said first image pickup section, onto said view confirming image;

a displaying section providing said eyepiece section with said view confirming image having been processed with said display processing; and

a controlling section switching between a first state to provide said eyepiece section with said optical image and a second state to provide said eyepiece section with said view confirming image, wherein

said displaying section changes a size of said frame based on said focal-length information when in said second state.

2. The camera according to claim 1, further comprising

a zooming section adjusting a display area of said view confirming image by one of optically and electronically changing a magnifying power of said second image pickup section.

3. The camera according to claim 2, wherein

said displaying section performs a warning indication indicative of a limit of the variable range of a magnifying power on one of a telescopic side and a wide-angle side of said zooming section, based on said focal-length information.

4. The camera according to claim 1, wherein

said display processing section adjusts a display area by distorting said view confirming image by image processing.

5. The camera according to claim 1, wherein

said display processing section executes display processing that superimposes an indication indicative of a focal length of said second image pickup section onto said view confirming image.

6. The camera according to claim 1, further comprising

a calculating section calculating parallax between said first image pickup section and said second image pickup section based on said focal-length information, wherein

said display processing section electronically corrects a position of said frame with respect to said view confirming image based on a data of said parallax.

7. The camera according to claim 1, further comprising

a calculating section calculating parallax between said first image pickup section and said second image pickup section based on said focal-length information, wherein

said display processing section electronically corrects a display area of said view confirming image based on a data of said parallax.

8. The camera according to claim 1, wherein

said second image pickup section is configured with an external camera unit capable of mounting and dismounting to the camera body.

9. A camera comprising:

a first image pickup section photographing a recording-purpose image;

a viewfinder optical system including an eyepiece section capable of observing an optical image of a subject with a light flux from a photographing optical path of said first image pickup section;

a second image pickup section photographing a view confirming image from an optical path different from that of said first image pickup section;

a mounting section capable of mounting and dismounting an interchangeable lens, and acquiring focal-length information of said interchangeable lens;

a display processing section executing display processing that superimposes a frame indicating a range of a field angle of said first image pickup section, onto said view confirming image;

a displaying section providing said eyepiece section with said view confirming image having been processed with said display processing; and

a controlling section switching between a first state to provide said eyepiece section with said optical image and a second state to provide said eyepiece section with said view confirming image, wherein

said displaying section fixes a size of said frame when in said second state and also changes a display of said view confirming image based on said focal-length information.

10. The camera according to claim 9, further comprising

a zooming section adjusting a display area of said view confirming image by one of optically and electronically changing a magnifying power of said second image pickup section.

11. The camera according to claim 10, wherein

said displaying section performs a warning indication indicative of a limit of the variable range of a magnifying power on one of a telescopic side and a wide-angle side of said zooming section, based on said focal-length information.

12. The camera according to claim 9, wherein

said display processing section adjusts a display area by distorting said view confirming image by image processing.

13. The camera according to claim 9, wherein

said display processing section executes display processing that superimposes an indication indicative of a focal length of said second image pickup section onto said view confirming image.

14. The camera according to claim 9, further comprising

a calculating section calculating parallax between said first image pickup section and said second image pickup section based on said focal-length information, wherein

said display processing section electronically corrects a position of said frame with respect to said view confirming image based on a data of said parallax.

15. The camera according to claim 9, further comprising

a calculating section calculating parallax between said first image pickup section and said second image pickup section based on said focal-length information, wherein

said display processing section electronically corrects a display area of said view confirming image based on a data of said parallax.

16. The camera according to claim 9, wherein

said second image pickup section is configured with an external camera unit capable of mounting and dismounting to the camera body.

17. A camera, comprising:

a first image pickup section photographing a recording-purpose image;

a viewfinder optical system including an eyepiece section capable of observing an optical image of a subject with a light flux from a photographing optical path of said first image pickup section;

a second image pickup section photographing a view confirming image from an optical path different from that of said first image pickup section;

a zooming section adjusting a display area of said view confirming image by electronically changing a magnifying power of said second image pickup section;

a displaying section providing said eyepiece section with said view confirming image; and

a controlling section switching between a first state to provide said eyepiece section with said optical image and a second state to provide said eyepiece section with said view confirming image.

18. The camera according to claim 17, wherein

said second image pickup section is configured with an external camera unit capable of mounting and dismounting to the camera body.

19. A camera comprising:

a first image pickup section photographing a recording-purpose image;

a viewfinder optical system including an eyepiece section capable of observing an optical image of a subject with a light flux from a photographing optical path of said first image pickup section;

a second image pickup section photographing a view confirming image from an optical path different from that of said first image pickup section;

a displaying section providing said eyepiece section with said view confirming image; and

a controlling section switching between a first state to provide said eyepiece section with said optical image and a second state to provide said eyepiece section with said view confirming image, and also causing said displaying section to display said recording-purpose image after photographing of said recording-purpose image.

20. The camera according to claim **19**, wherein

said second image pickup section is configured with an external camera unit capable of mounting and dismounting to the camera body.

21. A camera comprising:

a first image pickup section photographing a recording-purpose image;

a viewfinder optical system including an eyepiece section capable of observing an optical image of a subject with a light flux from a photographing optical path of said first image pickup section;

a second image pickup section photographing a view confirming image from an optical path different from that of said first image pickup section;

a displaying section providing said eyepiece section with said view confirming image; and

a controlling section switching between a first state to provide said eyepiece section with said optical image and a second state to provide said eyepiece section with said view confirming image, and also causing said displaying section to display at least one of a reproduced image of said recording-purpose image and a setting screen of the camera when in said second state.

22. The camera according to claim **21**, wherein

said second image pickup section is configured with an external camera unit capable of mounting and dismounting to the camera body.

* * * * *