US 20130111777A1

(19) United States

(12) Patent Application Publication

JEONG

(10) Pub. No.: US 2013/0111777 A1

(43) Pub. Date: May 9, 2013

(54) **HAIR DRYER**

(71) Applicant: **BA SOLUTIONS CO., LTD.**, Seoul (KR)

(72) Inventor: **Hae-Kyung JEONG**, Seoul (KR)

(73) Assignee: **BA SOLUTIONS CO., LTD.**, Seoul (KR)

(21) Appl. No.: **13/726,505**

(22) Filed: **Dec. 24, 2012**

(30) **Foreign Application Priority Data**

Jan. 21, 2011 (KR) 10-2011-0006380

Publication Classification

(51) **Int. Cl.**
A45D 20/12 (2006.01)

(52) **U.S. Cl.**
CPC *A45D 20/12* (2013.01)
USPC **34/97**

(57) **ABSTRACT**

A hair dryer includes a motor and a fan to generate an air current within a housing, and a heater for selectively supplying heat into air introduced from the outside of the housing by the fan. A discharge nozzle is disposed on one end of the housing. A coanda surface is disposed on the discharge nozzle. Thus, the air passing through the housing flows along the coanda surface to suction air outside the discharge nozzle into a central passage part of the discharge nozzle, thereby mixing the suctioned air with the air passing through the housing. The air mixed within the central passage part is discharged through a discharge hole of the discharge nozzle. Since the air passing on the coanda surface suctions the air outside the discharge nozzle, the motor may be reduced in capacity. Also, an electromagnetic shielding effect may be significantly improved.

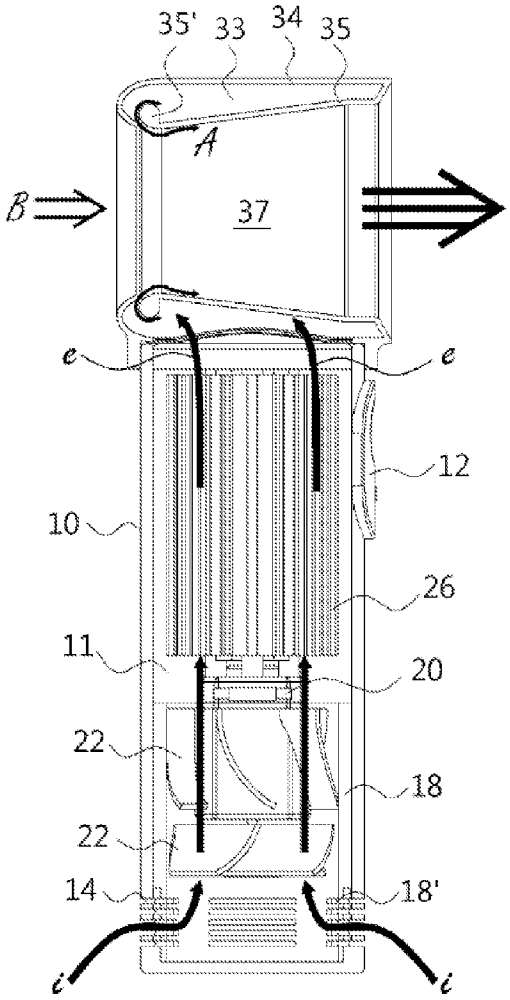

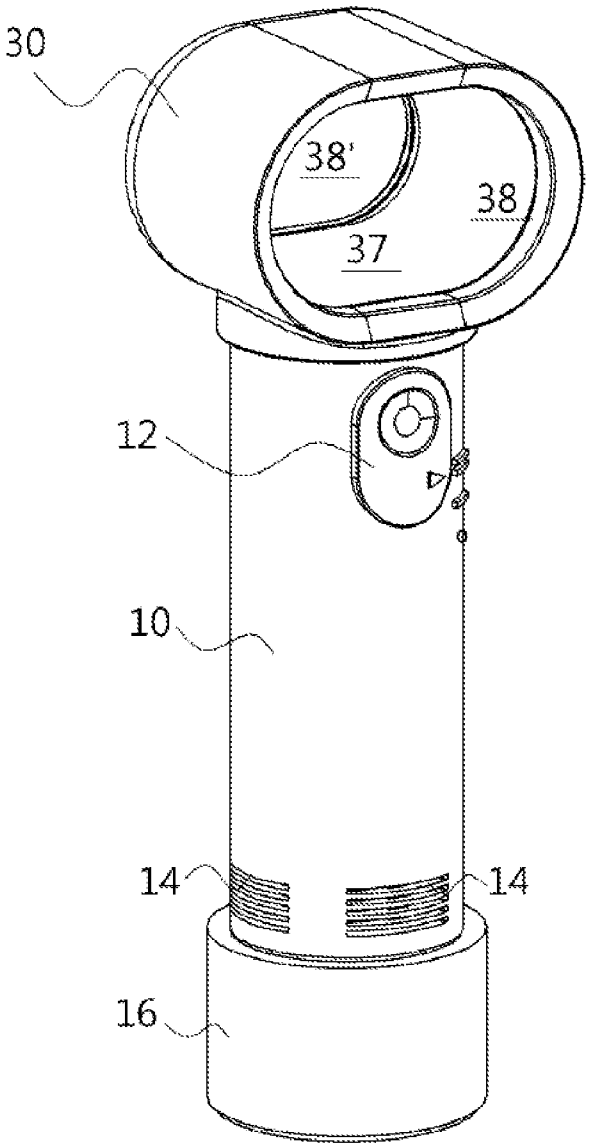

FIG. 1

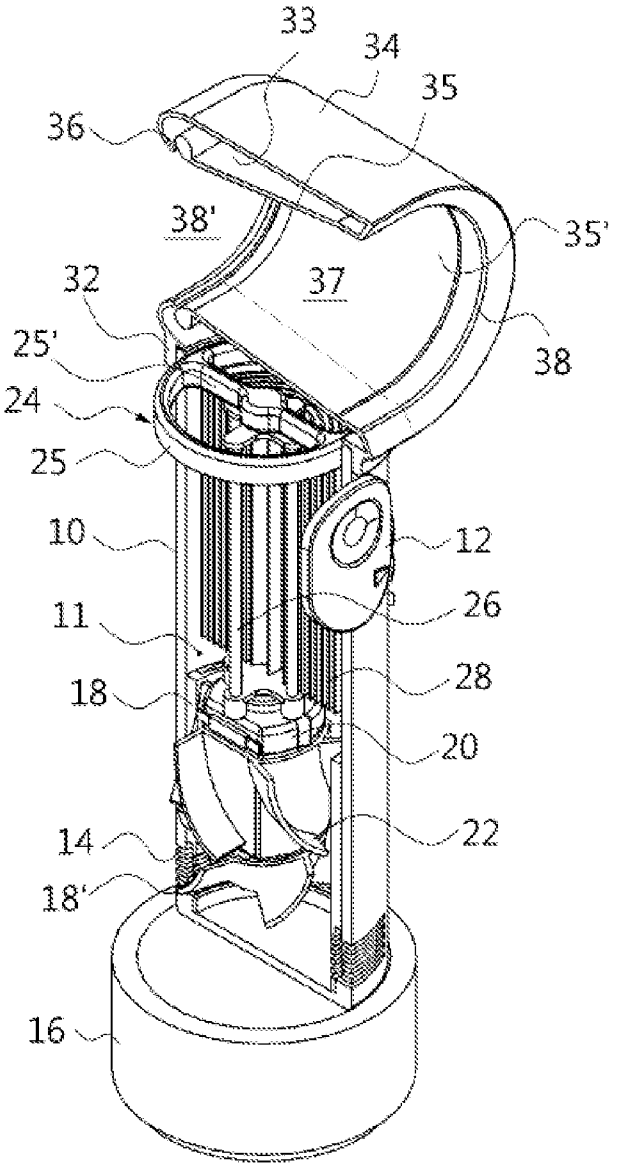

FIG. 2

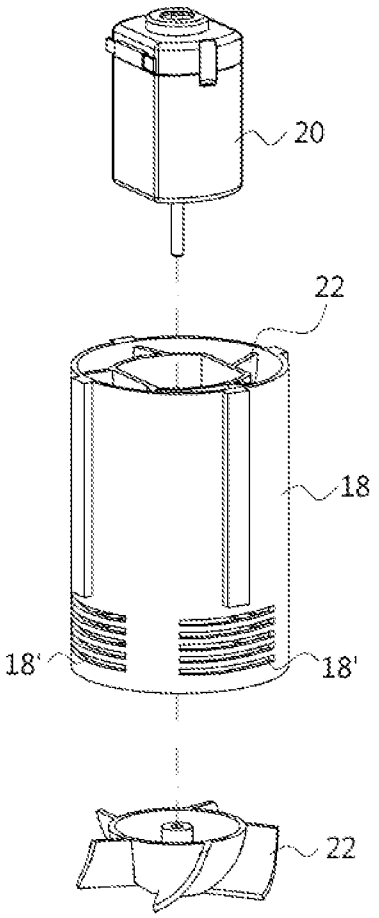

FIG. 3

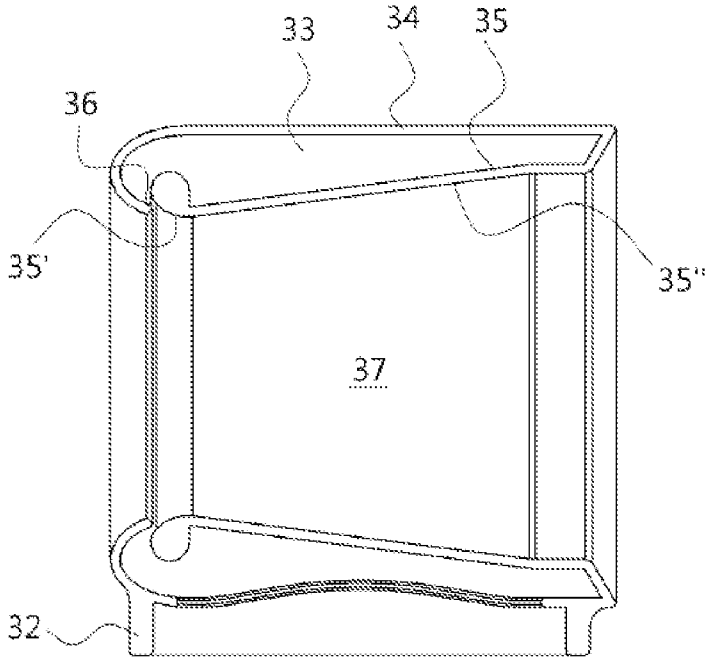

FIG. 4

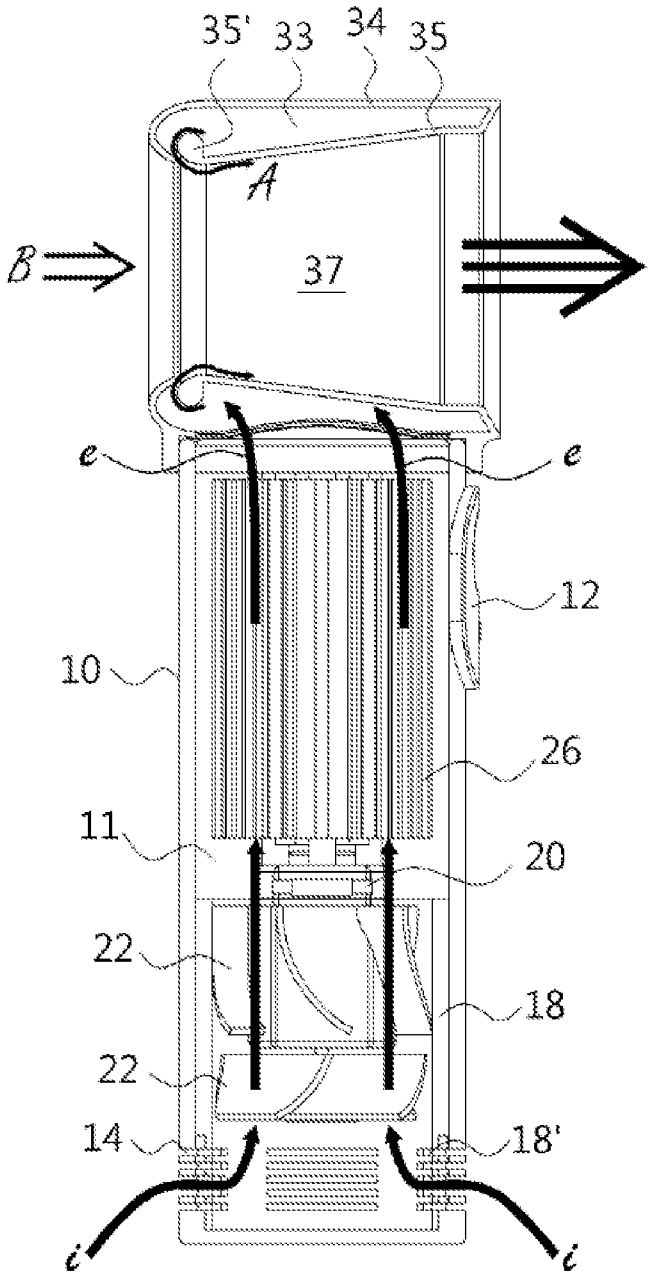

FIG. 5

HAIR DRYER

BACKGROUND OF THE INVENTION

[0001] 1. Field of the Invention

[0002] The present invention relates to a hair dryer, and more particularly, to a hair dryer which generates an air current using a coanda effect.

[0003] 2. Description of the Related Art

[0004] General hair dryers are devices in which an air current generated by a fan driven by a motor is discharged to the outside to dry or adjust user's hair. Air discharged from a hair dryer may be changed in temperature as occasion demands. Thus, to discharge air having a relatively high temperature, a heater may be provided within the hair dryer.

[0005] However, in the hair dryer according to the related art, an amount of air discharged through a discharge hole is decided according to capacity of the motor and fan. Thus, to obtain a desired amount of air, each of the motor and fan should have capacity over a predetermined level. As a result, the hair dryer may be relatively increased in size.

[0006] Also, when the motor is driven to rotate the fan, air suctioned from the outside by the rotation of the fan passes through the heater and then is discharged to the outside of the hair dryer. Thus, the heater is disposed at a position adjacent to a portion through which the air is discharged.

[0007] Thus, electromagnetic waves generated by the heater may be directly transferred into the user's hair. Therefore, the electromagnetic waves may do harm to user's health.

[0008] In addition, since the heater is disposed adjacent to a discharge hole, water may be easily introduced through the discharge hole from the outside. As a result, the water may contact the heater to electrocute the user.

SUMMARY OF THE INVENTION

[0009] An object of the present invention is to provide a hair dryer in which an amount of air current generated by a fan rotated by an operation of a motor is increased by a coanda effect to transfer a relatively large amount of air current into user's hair.

[0010] Another object of the present invention is to provide a hair dryer in which electrical components are disposed within the hair dryer away from a discharge hole corresponding to an upstream portion of an air flow to prevent moisture from being directly transferred into the electrical components.

[0011] According to an aspect of the present invention, there is provided a hair dryer including: a housing defining an inner space therein, the housing having an inflow slot, through which external air is introduced into the inner space, in an outer surface of a side thereof; an air current generation part disposed within the inner space of the housing to allow the external air introduced through the inflow slot from the outside of the housing to pass through the housing; a heater disposed within the inner space to selectively supply heat into the air passing through the housing; and a discharge nozzle coupled to one end of the housing, the discharge nozzle having a coanda surface on which the air passing through the inside of the housing passes to suction the external air by the air passing on the coanda surface, thereby discharging the mixed air together.

[0012] A power source part supplying a power for operating the heater and the air current generation part are disposed on the other end of the housing.

[0013] The air current generation part may include a motor and a fan rotated by the motor to generate an air current.

[0014] The motor may be assembled with a motor housing fixed to the inner space of the housing.

[0015] The discharge nozzle may have a cylindrical shape of which at least one portion has a circular shape and may include a central passage part respectively having a secondary inflow hole passing through a central portion thereof in front and rear directions to introduce the external air and a discharge hole, in which the air passing through the housing and the external air are mixed with each other and are discharged therethrough, on both ends thereof.

[0016] A ring-shaped inner passage in which the air passing through the housing flows may be defined in the discharge nozzle, and a ring-shaped discharge slit for discharging air onto the coanda surface may be defined in a downstream portion of the inner passage.

[0017] An inner wall may define an inner surface of the discharge nozzle, and the coanda surface for guiding the air discharged through the discharge slit and a diffusion surface for gradually increasing a flow sectional area of the central passage part toward the discharge hole may be continuously defined on the inner wall.

[0018] A coupling ring part having a screw part on an inner surface thereof may be disposed on an outer surface of the discharge nozzle, and a screw part corresponding to the screw part of the coupling ring part may be disposed on an outer surface of the one end of the housing so that the discharge nozzle is coupled to the one end of the housing.

[0019] The air current generation part may be disposed at an upstream portion of the air current flowing into the housing, and the heater may be disposed at a downstream of the air current under the air current generation part.

[0020] According to another aspect of the present invention, there is provided a hair dryer including: a housing defining an inner space therein, the housing having an inflow slot, through which external air is introduced into the inner space, in an outer surface of a side thereof; a motor disposed within the inner space of the housing, the motor rotating a fan for generating an air current so that air is introduced from the outside of the housing through the inflow slot to pass through the housing; a heater disposed within the inner space to selectively supply heat into the air passing through the housing; and a discharge nozzle coupled to one end of the housing, the discharge nozzle having an inner passage through which the passing through the inside of the housing passes and a coanda surface for guiding the air discharged from the inner passage to suction the external air by the air passing on the coanda surface, thereby discharging the mixed air together.

[0021] The discharge nozzle has a cylindrical shape of which at least one portion may have a circular shape, an outer surface of the discharge nozzle may be defined as an outer wall, and an inner surface of the discharge nozzle may be defined as an inner wall, an inner passage may be defined between the outer wall and the inner wall to allow the air passing through the housing to flow, a discharge slit through which the air passing through the inner passage is discharged may be disposed around the inside of a rear end of the discharge nozzle to guide the air onto the coanda surface defined on the inner wall, and a central passage part respectively having a secondary inflow hole passing through a central portion of the discharge nozzle in front and rear directions to introduce the external air and a discharge hole, in which the air passing through the housing and the external air are mixed

SharkNinja Ex. 1004
SharkNinja et al. v. Dyson Technology Limited,
IPR2023-01324
Page 7 of 11

with each other and are discharged the discharge nozzle, on both ends of the discharge nozzle may be provided in the discharge nozzle.

[0022] The coanda surface for guiding the air discharged through the discharge slit and a diffusion surface for gradually increasing a flow sectional area of the central passage part toward the discharge hole may be continuously defined on the inner wall of the discharge nozzle.

BRIEF DESCRIPTION OF THE DRAWINGS

[0023] The accompanying drawings, which are included to provide a further understanding of the invention and are incorporated in and constitute a part of this application, illustrate embodiment(s) of the invention and together with the description serve to explain the principle of the invention. In the drawings:

[0024] FIG. **1** is a perspective view of a hair dryer according to an embodiment of the present invention;

[0025] FIG. **2** is a partial cross-sectional perspective view of an inner structure of the hair dryer according to an embodiment of the present invention;

[0026] FIG. **3** is an exploded perspective view of a motor and a fan according to an embodiment of the present invention;

[0027] FIG. **4** is a detailed cross-sectional view of a discharge nozzle according to an embodiment of the present invention; and

[0028] FIG. **5** is an operation state view illustrating an air current generation process according to an embodiment of the present invention.

DETAILED DESCRIPTION OF THE INVENTION

[0029] Reference will now be made in detail to the preferred embodiments of the present invention, examples of which are illustrated in the accompanying drawings.

[0030] Referring to the drawings, a housing **10** defines a portion of an outer appearance of a hair dryer. In the current embodiment, the housing **10** has a cylindrical shape. Also, the housing **10** provides an inner space **11** in which parts to be described below are installed. The housing **10** may have a polygonal shape such as a square shape or an oval shape in cross-section.

[0031] A manipulation button **12** is disposed on a side of an outer surface of the housing **10**. The manipulation button **12** manipulates an operation of the hair dryer. A plurality of inflow slots **14** is defined in a lower portion of the housing **10**. The plurality of inflow slots **14** may be disposed side by side around a lower outer circumference of the housing **10**. The inflow slots **14** may serve as passage through which air is introduced inward from the outside of the housing **10**.

[0032] A power source part **16** is disposed on a lower end of the housing **10**. The power source part **16** supplies a power for operating the hair dryer. The power source part **16** may be a portion in which a chargeable battery or dry cell is inserted, or a power line and plug connected to a power source are disposed.

[0033] A motor housing **18** is disposed within the housing **10**. An outer surface of the motor housing **18** may be closely attached to an inner surface of the housing **10**. In the motor housing **18**, inner inflow slots **18'** are defined in positions corresponding to those of the inflow slots **14** to introduce external air into the motor housing **18**.

[0034] A motor **20** is disposed within the motor housing **18**. The motor **20** receives a power from the power source part **16** and then is driven to provide a rotation force. A fan **22** is disposed on a rotation shaft (not shown) of the motor **20**. The fan **22** is rotated inside the motor housing **18** to introduce air from the outside of the housing **10** into the motor housing **18** through the inflow slots **14** and the inner inflow slots **18'** and then blow into a discharge nozzle **30** that will be described below.

[0035] The fan **22** is rotated inside the motor housing **18** so that the air flows. Also, the fan **22** is designed so that the fan **22** does not interfere with parts disposed on the inner surface of the motor housing **18** to guide the air flow. The motor housing **18**, the motor **20**, and the fan **22** may be provided as one assembly. The assembly may be inserted into and assembled with the housing **10**.

[0036] A cap **24** is disposed on an inner surface of an upper end of the housing **10**. The cap **24** includes a cap body **25** having a ring shape and a connection bar **25'** crossing the cap body **25** in a diameter direction. The cap **24** may be press-fitted into or screw-coupled to the inner surface of the housing **10** to fix parts disposed within the housing **10**.

[0037] A plurality of fixing bars **26** are disposed between the cap **24** and the motor **20** to fix the motor **20** to the inside of the housing **10**. In the current embodiment, four fixing bars **26** may be provided. Here, if the motor housing **18** is firmly fixed to the inside of the housing **10**, it may be unnecessary to provide the cap **24** and the fixing bars **26**.

[0038] A heater **28** is disposed on an inner upper end of the housing **10**, i.e., a position corresponding to an upper side of the motor **20**. The heater **28** includes a plurality of heating plates arranged side by side in a length direction of the housing **10**. Air may be heat-exchanged with the heating plates while passing between the heating plates. The air passing through the heater receives heat and thus is increased in temperature. The heater **28** receives a power from the power source part **16** to generate heat.

[0039] A discharge nozzle **30** is disposed on an upper end of the housing **10**. The discharge nozzle **30** is configured to mix the air passing through the housing **10** with the external air, thereby discharging the mixed air. At least one portion of the discharge nozzle **30** in cross-section has a circular shape. In the current embodiment, the discharge nozzle **30** has an oval cylindrical shape in which the discharge nozzle **30** has an oval shape in cross-section. However, the discharge nozzle **30** may have a circular shape in cross-section.

[0040] A coupling ring part **32** is disposed on a side of an outer surface of the discharge nozzle **30**. The coupling ring part **32** is coupled to the upper end of the housing **10**. A screw part is disposed on an inner surface of the coupling ring part **32**. That is, a screw part corresponding to an upper outer surface of the housing **10** may be disposed on an inner surface of the coupling ring part **32** to couple the discharge nozzle **30** to the housing **10**.

[0041] An inner passage **33** is defined within the discharge nozzle **30**. The inner passage **33** has a ring shape around the inside of the discharge nozzle **30**. The whole shape of the inner passage **33** may be is relevant to that of the discharge nozzle **30**. The inner passage **33** is a portion into which the air discharged from the housing **10** flows. Here, the coupling ring part **32** may serve as an inlet of the inner passage **33**.

[0042] An outer wall **34** and an inner wall **35** may be associated with each other to define the inner passage **33**. The

SharkNinja Ex. 1004
SharkNinja et al. v. Dyson Technology Limited,
IPR2023-01324
Page 8 of 11

outer wall **34** defines an outer surface of the discharge nozzle **30**, and the inner wall **35** defines an inner surface of the discharge nozzle **30**.

[0043] A predetermined section may be defined as a coanda surface **35'** at an upstream portion of air current discharged from the inner passage **33** in the surface of the inner wall **35**, i.e., a position getting out of a discharge slit **36** that will be described below. When a fluid flows, the fluid may flow along a surface of the coanda surface **35'**. Thus, the coanda surface **35'** may generate a coanda effect. Since the coanda effect is a previously known fact, its description will be omitted. A diffusion surface **35"** connected to the coanda surface **35'** and disposed along the inner wall **35** is provided. The diffusion surface **35"** may be configured so that the inner wall **35** is gradually increased in flow sectional area.

[0044] The discharge slit **36** is defined in a downstream portion of the inner passage **33**. The discharge slit **36** is defined around an inner surface of a rear end of the discharge nozzle **30**. That is, ends of the inner wall **35** and the outer wall **34** are disposed adjacent to each other to define a predetermined gap therebetween, thereby defining the discharge slit **36**. Thus, the discharge slit **36** may have a shape corresponding to that of a cross-section of the discharge nozzle **30**. Air flowing along the inner passage **33** is discharged through the discharge slit **36** to flow onto the coanda surface **35'**. The outer wall **34** defining the discharge slit **36** has a semicircular shape in longitudinal section to provide a predetermined gap between the outer wall **34** and a rear end of the inner wall **35**. The gap may serve as the discharge slit **36**. Also, an amount of air discharged through the discharge slit **36** may be decided according to a width of the discharge and an angle of the coanda surface **35'**. The outer wall **34** and the inner wall **36** may be designed in shape so that a flow sectional area from the inner passage **33** toward the discharge slit **36** is gradually decreased.

[0045] A central passage part **37** is disposed to pass through the inside of the discharge nozzle **30** in front and rear directions. The coanda surface **35'** and the diffusion surface **35"** which are portions of the surface of the inner wall **35** are defined on an inner surface of the central passage part **37**. Thus, the central passage part **37** may have a flow sectional area gradually increasing from a rear end of the discharge nozzle **30** toward a front end.

[0046] The front end of the central passage part **37**, i.e., a portion through which air is finally discharged from the discharge nozzle **30** may be referred to as a discharge hole **38**, and the rear end of the central passage part **37**, i.e., a portion through which air is introduced into the central passage part **37** may be referred to as a secondary inflow hole **38'**. Air may be introduced from the outside of the discharge nozzle **30** through the secondary inflow hole **38'** by a low pressure region which is generated while the air discharged through the discharge slit **36** flows along the coanda surface **35'**. The air introduced through the secondary inflow hole **38'** is mixed with the air discharged through the discharge slit **36** while passing through a region corresponding to the diffusion surface **35"**, and then the mixed air is discharged through the discharge hole **38**.

[0047] Hereinafter, the assembly and use of the hair dryer including the above-described components will be described in detail.

[0048] In the hair dryer according to the current embodiment, the power source part **16** is mounted on the lower end of the housing **10**. Thus, the lower end of the housing **10** may be closed by the power source part **16** or a separate structure. The motor housing **18** is inserted through the upper end of the housing **10**. Here, the motor **20** and the fan **22** are previously assembled with the motor housing **18**. That is, the motor housing **18**, the motor **20**, and the fan **22** are provided as one assembly. Due to the above-described structure, external air may be suctioned into the housing **10** to generate an air current passing through the inside of the housing **10**. Thus, the assembly may be called an air current generation part.

[0049] After the motor **20** is inserted, the heater **28** is inserted into and fixed to the inner space **11** of the housing **10**. The fixing bar **26** is inserted into the inside of the upper end of the housing **10** in which the heater **28** is inserted. Then, an end of the fixing bar **26** is seated on one surface of the motor **20**. Next, the cap **24** is press-fitted into and fixed to an inlet of the upper end of the housing **10** to prevent the parts within the housing **10** from being randomly moved or separated from the housing **10**.

[0050] Next, the screw part disposed on the inner surface of the coupling ring part **32** of the discharge nozzle **30** is coupled to a screw part disposed on the outer surface of the upper end of the housing **10**. As a result, the discharge nozzle **30** is coupled to the housing **10**, and also, the inside of the housing **10** communicates with the inner passage **33** of the discharge nozzle **30**.

[0051] To operate the hair dryer assembled as described above according to the current embodiment, the manipulation button **12** should be manipulated by the user. For example, the manipulation button **12** may be manipulated to select one of a hot wind mode and a room-temperature wind mode. In case of the hot wind mode, the heater **28** generates heat to heat the air discharged from the discharge hole **38** at a predetermined temperature. In case of the room-temperature wind mode, the heater **28** does not generate heat. Thus, the air suctioned into the housing **10** just passes through the heater **28** without being heat-exchanged with the heater **28**. Thus, air having room temperature is discharged through the discharge hole **38**.

[0052] The motor **20** may be driven to rotate the fan **22**, thereby suctioning air into the housing **10**. An air current may be generated in a direction of the heater **28** within the housing **10** by the rotation of the fan **22**. The inner space **11** corresponding to the inside of the inflow slot **14** of the housing **10** may have a relatively low pressure by the air current. Thus, air may be introduced as shown by an arrow i of FIG. **5** through the inflow slot **14** and the inner inflow slot **18'** from the outside of the housing **10**.

[0053] The air introduced into the housing **10** passes through the outside of the fan **22** and the motor **20** to pass between the heating plates of the heater **28**. In case of the hot wind mode, the air is heat-exchanged with the heating plates to increase a temperature of the air.

[0054] The air passing through the heater **28** passes through the coupling ring part **32** to flow into the inner passage **33** as shown by an arrow e of FIG. **5**. The air introduced into the inner passage **33** is transferred into the whole region of the inner passage **33** having the ring shape and then is discharged from the inner passage **33** through the discharge slit **36**.

[0055] The air discharged through the discharge slit **36** flows along the coanda surface **35'** as shown by an arrow A of FIG. **5**. As described above, when the air is increased in velocity while flowing along the coanda surface **35'**, the surrounding of the coanda surface **35'** may be relatively decreased in pressure. Thus, as shown by an arrow B of FIG.

SharkNinja Ex. 1004
SharkNinja et al. v. Dyson Technology Limited,
IPR2023-01324
Page 9 of 11

5, air outside the discharge nozzle **30** is introduced into the central passage part **32** through the secondary inflow hole **38**.

[0056] The external air introduced into the central passage part **32** through the secondary inflow hole **38** and the air discharged through the discharge slit **36** are mixed with each other while passing through the section of the central passage part **32** corresponding to the diffusion surface **35"**. Then, the air is discharged through the discharge hole **39** and is transferred into the user's hair.

[0057] It will be apparent to those skilled in the art that various modifications and variations can be made in the present invention. Thus, it is intended that the present invention covers the modifications and variations of this invention provided they come within the scope of the appended claims and their equivalents.

[0058] For example, the motor **20** and the fan **22** for suctioning air into the housing **10** may be varied in configuration. That is, the fan **22** may be disposed under the motor **20**. Also, the fan **22** may be variously changed in shape.

[0059] Also, it is not necessary to insert the motor into the housing **10** in the state where the motor **20** is assembled with the motor housing **18**. For example, the motor **20** may be directly mounted in the inner space **11** of the housing **10**. In this case, a structure for fixing the motor **20** may be provided on an inner surface of the inner space **11** of the housing **10**.

[0060] Also, unlike the above-described embodiment, in the air current generation part including the heater **28** and the motor **20**, the heater **28** may be disposed adjacent to the inflow slot **14**. Also, the air current generation part including the motor **20** may be disposed adjacent to the discharge nozzle **30**.

[0061] The hair dryer according to the present invention may obtain effects as follows.

[0062] According to the present invention, the air supplied from the outside of he discharge nozzle by the coanda effect may be mixed with the air suctioned into the hair dryer by the operation of the fan to increase the total amount of air, thereby discharging the air to the outside of the hair dryer. Thus, when compared to the hair dryer according to the related art, the hair dryer according to the present invention may use the motor and fan having relatively low capacities under the same flow rate. Thus, the hair dryer may be miniaturized on the whole to reduce the manufacturing costs.

[0063] Also, since the passage in which the air discharged from the inside of the housing passes through the discharge nozzle is relatively long, and also the discharge slit is vary narrow, waterproof performance of the housing may be improved to prevent moisture from being introduced into the housing and from being transferred into the electrical component within the housing.

[0064] In addition, since the heater is disposed at the relatively upstream portion of the air current in the discharge hole of the discharge nozzle to sufficiently cover the electromagnetic waves generated in the heater, the direct transmission of the electromagnetic waves into the user may be minimized.

[0065] Also, since the parts such as the heater is disposed relatively away from the discharge hole and structurally shielded from the outside to improve the waterproof performance of the housing, noise shielding performance in addition to the waterproof performance may be improved. Furthermore, since the motor and fan are relatively miniaturized, the noise may be reduced on the whole.

[0066] Also, the motor is relatively decreased in capacity, power consumption may be reduced. Thus, if a battery is used as a power source, a use time of the hair dryer may be maintained above a predetermined time. Therefore, a portable hair dryer may be manufactured.

What is claimed is:

1. A hair dryer comprising:

a housing defining an inner space therein, the housing having an inflow slot, through which external air is introduced into the inner space, in an outer surface of a side thereof;

an air current generation part disposed within the inner space of the housing to allow the external air introduced through the inflow slot from the outside of the housing to pass through the housing;

a heater disposed within the inner space to selectively supply heat into the air passing through the housing; and

a discharge nozzle coupled to one end of the housing, the discharge nozzle having a coanda surface on which the air passing through the inside of the housing passes to suction the external air by the air passing on the coanda surface, thereby discharging the mixed air together.

2. The hair dryer of claim **1**, wherein a power source part supplying a power for operating the heater and the air current generation part are disposed on the other end of the housing.

3. The hair dryer of claim **2**, wherein the air current generation part comprises a motor and a fan rotated by the motor to generate an air current.

4. The hair dryer of claim **3**, wherein the motor is assembled with a motor housing fixed to the inner space of the housing.

5. The hair dryer of claim **1**, wherein the discharge nozzle has a cylindrical shape of which at least one portion has a circular shape and comprises a central passage part respectively having a secondary inflow hole passing through a central portion thereof in front and rear directions to introduce the external air and a discharge hole, in which the air passing through the housing and the external air are mixed with each other and are discharged therethrough, on both ends thereof.

6. The hair dryer of claim **5**, wherein a ring-shaped inner passage in which the air passing through the housing flows is defined in the discharge nozzle, and a ring-shaped discharge slit for discharging air onto the coanda surface is defined in a downstream portion of the inner passage.

7. The hair dryer of claim **6**, wherein an inner wall defines an inner surface of the discharge nozzle, and the coanda surface for guiding the air discharged through the discharge slit and a diffusion surface for gradually increasing a flow sectional area of the central passage part toward the discharge hole are continuously defined on the inner wall.

8. The hair dryer of claim **7**, wherein a coupling ring part having a screw part on an inner surface thereof is disposed on an outer surface of the discharge nozzle, and a screw part corresponding to the screw part of the coupling ring part is disposed on an outer surface of the one end of the housing so that the discharge nozzle is coupled to the one end of the housing.

9. The hair dryer of claim **8**, wherein the air current generation part is disposed at an upstream portion of the air current flowing into the housing, and the heater is disposed at a downstream of the air current under the air current generation part.

10. A hair dryer comprising:

a housing defining an inner space therein, the housing having an inflow slot, through which external air is introduced into the inner space, in an outer surface of a side thereof;

a motor disposed within the inner space of the housing, the motor rotating a fan for generating an air current so that air is introduced from the outside of the housing through the inflow slot to pass through the housing;

a heater disposed within the inner space to selectively supply heat into the air passing through the housing; and

a discharge nozzle coupled to one end of the housing, the discharge nozzle having an inner passage through which the passing through the inside of the housing passes and a coanda surface for guiding the air discharged from the inner passage to suction the external air by the air passing on the coanda surface, thereby discharging the mixed air together.

11. The hair dryer of claim **10**, wherein the discharge nozzle has a cylindrical shape of which at least one portion has a circular shape,

an outer surface of the discharge nozzle is defined as an outer wall, and an inner surface of the discharge nozzle is defined as an inner wall,

an inner passage is defined between the outer wall and the inner wall to allow the air passing through the housing to flow,

a discharge slit through which the air passing through the inner passage is discharged is disposed around the inside of a rear end of the discharge nozzle to guide the air onto the coanda surface defined on the inner wall, and

a central passage part respectively having a secondary inflow hole passing through a central portion of the discharge nozzle in front and rear directions to introduce the external air and a discharge hole, in which the air passing through the housing and the external air are mixed with each other and are discharged the discharge nozzle, on both ends of the discharge nozzle is provided in the discharge nozzle.

12. The hair dryer of claim **11**, wherein the coanda surface for guiding the air discharged through the discharge slit and a diffusion surface for gradually increasing a flow sectional area of the central passage part toward the discharge hole are continuously defined on the inner wall of the discharge nozzle.

13. The hair dryer of claim **10**, wherein the coanda surface for guiding the air discharged through the discharge slit and a diffusion surface for gradually increasing a flow sectional area of the central passage part toward the discharge hole are continuously defined on the inner wall of the discharge nozzle.

* * * * *