Dec. 8, 1925. 1,564,896

S. T. RINKER ET AL

COMBINED ELECTRICAL HEATER AND BLOWER

Filed May 3, 1923 2 Sheets-Sheet 1

FIG. 1.

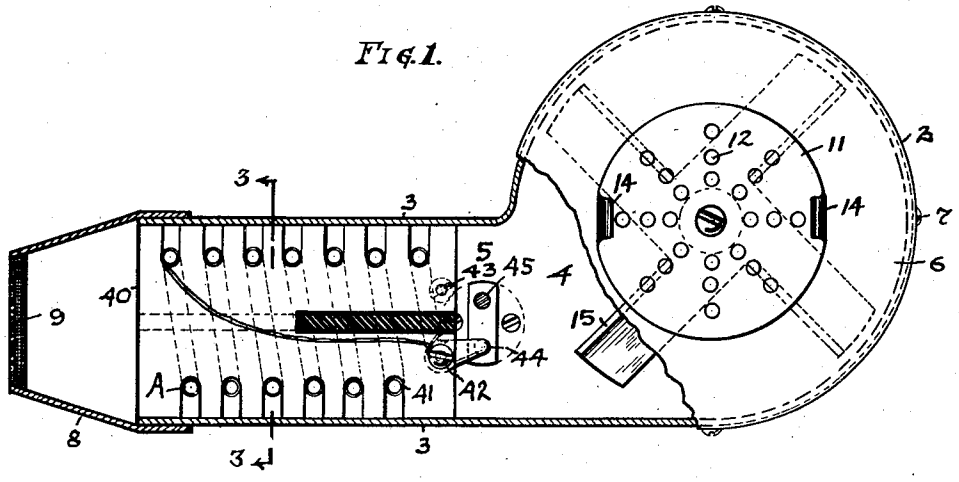

FIG. 2.

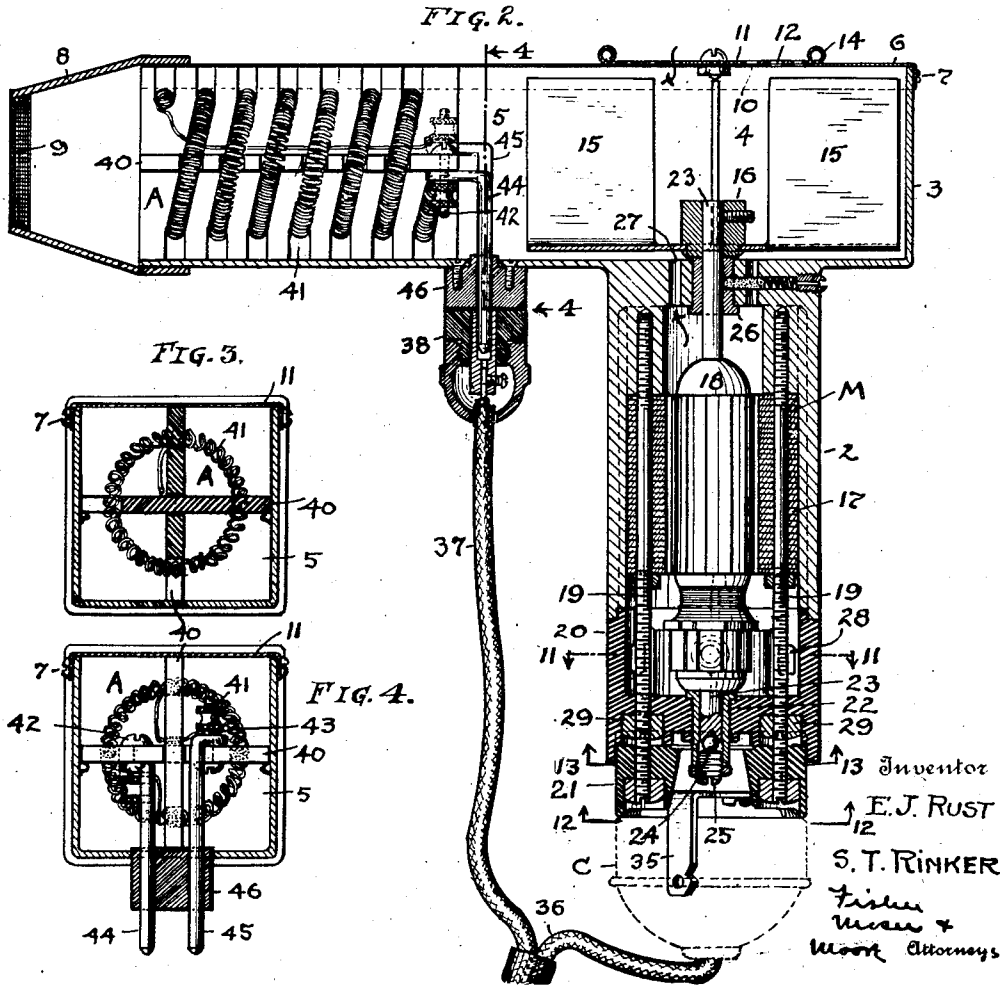

FIG. 3.

FIG. 4.

Dec. 8, 1925. 1,564,896

S. T. RINKER ET AL

COMBINED ELECTRICAL HEATER AND BLOWER

Filed May 3, 1923 2 Sheets-Sheet 2

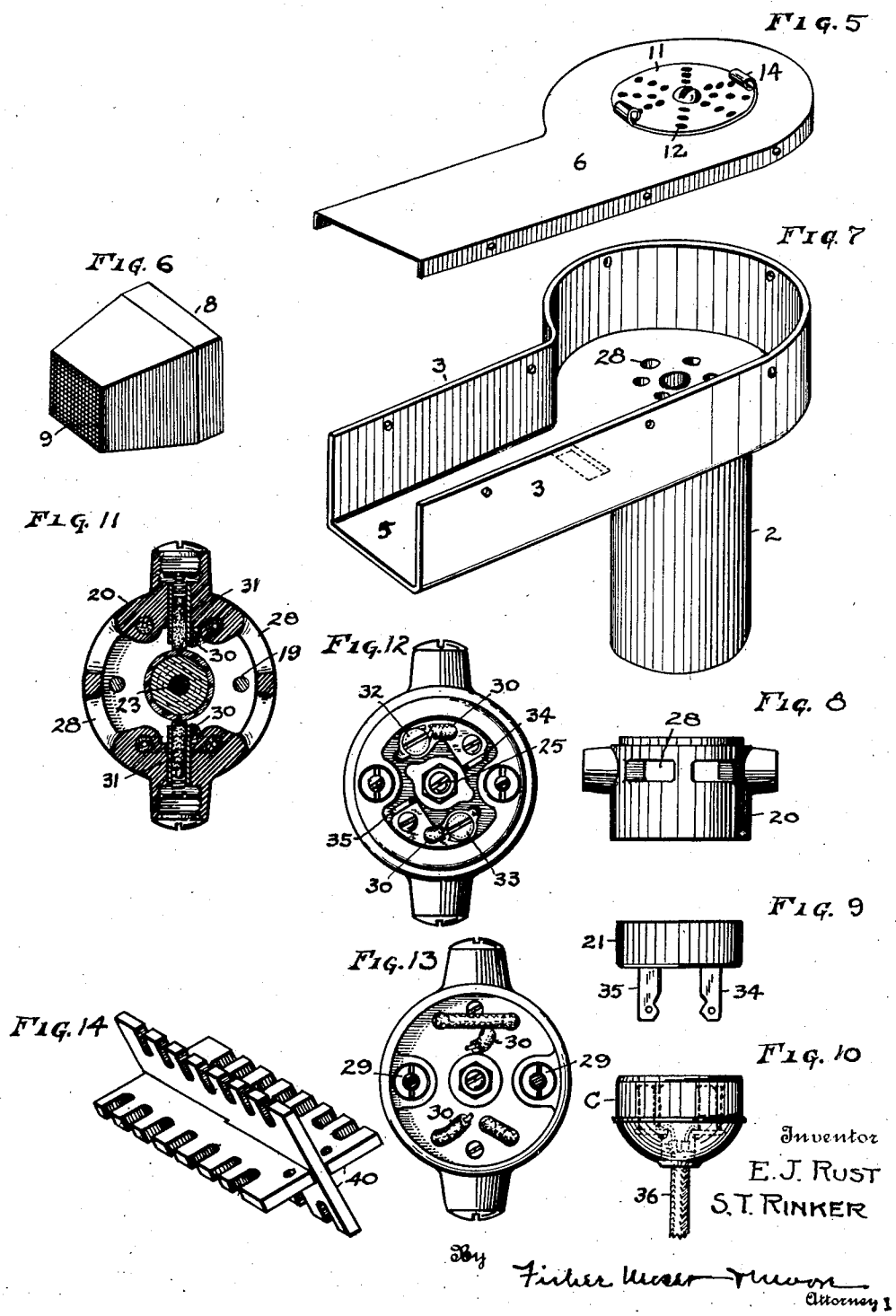

Patented Dec. 8, 1925. 1,564,896

UNITED STATES PATENT OFFICE.

S. TRUMAN RINKER AND ERVIN J. RUST, OF CLEVELAND, OHIO.

COMBINED ELECTRICAL HEATER AND BLOWER.

Application filed May 3, 1923. Serial No. 636,353.

To all whom it may concern:

Be it known that we, S. TRUMAN RINKER and ERVIN J. RUST, citizens of the United States, residing at Cleveland, in the county of Cuyahoga and State of Ohio, have invented certain new and useful Improvements in a Combined Electrical Heater and Blower, of which the following is a specification.

The present invention relates to an improvement in electric hair dryers, the general object of the improvement being to provide a compact electric device adapted to be held in the hand, and comprising an electric heater, a fan or blower and a small electric motor, the said parts being particularly arranged and constructed to permit the operator to conveniently control and manipulate the device and to effect discharge of either hot or cold air therefrom.

In the accompanying drawings, Fig. 1 is an end view of the top of the device, the discharge spout or extension and the heater therein being shown in section. Fig. 2 is a vertical section of the handle and motor and also the fan casing and discharge spout. Fig. 3 is a transverse section of the spout on line 3—3 of Fig. 1, and Fig. 4 is a similar view on line 4—4 of Fig. 2. Fig. 5 is a perspective view of the removable cover plate for the fan-casing. Fig. 6 is a perspective view of the screened cap for the discharge spout. Fig. 7 is a perspective view of the combined fan and motor body or casing. Fig. 8 is a side elevation of the brush holder extension for the motor body. Fig. 9 is a side elevation of the base member for the electric connector and which provides a supplemental handle extension. Fig. 10 is a side elevation of the separable member of the electrical connector. Fig. 11 is a cross section of the brush holder on line 11—11 of Fig. 2, and Fig. 12 is an end view of the base part of the electrical connector on line 12—12 of Fig. 2. Fig. 13 is an end view on line 13—13 of Fig. 2, with the base part removed. Fig. 14 is a perspective view of the notched plates which form the body of the electric heating element.

The invention comprises a cylindrical body 2 which is enlarged at its upper end and formed with straight side walls 3 to provide a circular fan or blower chamber 4 having a flat bottom. A side outlet and straight discharge passage 5 for this chamber is also formed by extending the bottom and walls 3 laterally on straight lines for a substantial distance, but this outlet and passage is preferably off center in respect to the fan chamber and the motor body and handle 2. A flanged cover plate 6 having the same outline as chamber 4 and passage 5 is removably secured to the upper edges of walls 3 by screws 7, and a substantially square tapering nose cap 8 is frictionally and detachably engaged with the lateral discharge extension formed by walls 3 and said cover plate 6. A fine wire-mesh screen 9 is fixed within or across the mouth of the nose cap, and cover plate 6 is provided with radial air intake openings 10 centrally above the round fan chamber 4, which intake openings may be opened or closed by a rotatable disk 11 having registering air openings 12, and the disk is further provided with portions 14 of its edges curled upwardly to permit finger engagement to rotate the disk. A fan having straight upright blades 15 extending radially in respect to a hub 16 is adapted to be rotated at a high speed in chamber 4 by means of a relatively small electric motor M mounted within the depending cylindrical body 2 which forms a casing for the motor and also a handle to support the device in the hand. Thus, body 2 is hollow to receive the field winding and laminations 17 and the armature or rotor 18, and tie rods 19 are used to secure the laminations in place. The tie rods also extend outwardly beyond the lower open end of body 2 to permit the attachment of a brush-supporting member 20 and also the base member 21 of a separable electrical attachment plug or connector thereto, these added parts also serving to extend and lengthen the body to form a relatively long handle adapted to be grasped conveniently in the hand. Member 20 has a bearing tube 22 centrally within its closed end for one end of the armature shaft 23, and an anti-friction ball 24 and adjusting screw 25 supports the shaft in an upright position and takes up its end thrust. The opposite end of armature shaft 23 extends through a separate bushing or tubular bearing 26 in the perforated upper end of body 2, the perforations 27 providing circulating openings for air passing upwardly through body 2 when drawn in by the fan through openings 28 in the side of member 20. This member has recesses within its bottom face to receive the nuts 29 which engage tie rods

19 to fasten the member rigidly to the bottom end of body 2, and the electric conductors 30 for the brushes 31 pass outwardly through suitable openings in the diaphragm or cross wall of this member where they may be projected through other openings in the base member and connected to the terminal screws 32 and 33, for the attachment blades 34 and 35, respectively, which extend downwardly from base member 21, see Figs. 9 and 12. The separable cap C of the connector member embodies spring contact fingers and is constructed to receive the blades in any suitable way according to known practices and forms a connection to supply electric current from a cable 36 which is connected to any suitable source of electric supply.

An electric heater A within passage 5 is also electrically connected to cable 36 by a flexible connection 37 and a smaller separable attachment plug 38 or its equivalent thereby permitting the device to be readily detached as a whole from the cable and handled independently and also permitting the heater to be electrically disconnected without disconnecting the motor. Separable plug 38 is in effect an electric switch and a switch may be substituted therefrom if desired. Heater E comprises a body formed of insulating and heat-resisting material, for example asbestos board, and as shown two plates 30 are slotted medially for a part of their length to permit them to be dove-tailed and fastened together at right angles. A solid body of insulating and heat resisting material may be used instead.

Each longitudinal edge of each plate is notched at uniformly-spaced intervals and the respective notches in the opposite edges and staggered in respect to each other when the two plates are dove-tailed together so that a helical resistance wire 41 may be wound spirally around the notched angular body with the convolutions spaced the same distance apart as the notches in the edges of the respective plates and with the wire coil also retired in respect to the longitudinal edges of the plates. Thus when the angular body carrying the resistance coil is introduced into passage 5 the edges of the plates bear against the four flat walls on the horizontal and vertical median lines thereof and the resistance coil is spaced apart from these metal walls and appears as a circle viewed from either end, see Figs. 3 and 4. The transverse horizontal plate is provided at its inner end with a pair of binding screws 42 and 43, respectively for the opposite ends of the resistance coil 41, and these screws are also used to support angular-shaped terminal members 44 and 45, respectively, having round pointed extremities extending through a block 46 of insulating material secured by screws within the flat bottom of passage 5. These terminals project sufficiently beneath the block to permit a detachable slip-joint connection to be made with the electric-current supply connecting member 38. The round terminals pass through vertical bores in block 46, and when cover plate 6 is removed the heater may be elevated bodily out of passage 5 without disconnecting the resistance wires. When the terminals are seated in the bores the heater is locked against longitudinal movement, that is, it can not be shifted toward the fan nor removed from the mouth of the discharge passage. In operating the device, the fan and heater may be operated concurrently to effect a discharge of heated air when both are electrically connected or the heater may be electrically disconnected and the fan operated to discharge only cold air. The heater may also be connected and operated without operating the fan, and the volume and force of the air to be delivered may be regulated and cut down by adjusting the regulating disk 11. Heating of the air is promoted by dividing the discharge passage into four longitudinal sub-divisions and locating a section of the resistance coil of helical wire in each small sub-division, and the slots in the plates for holding the resistance coil are of equal depth to produce a coil having convolutions of uniform diameter but the slots may vary in depth to produce a resistance coil of varying diameter in the path of the outflowing air in each sub-division. The contour or shape of the fan and its chamber and the spout may be varied from that shown without departing from the scope of the invention.

What I claim, is:

1. A combined heater and blower, comprising a casing having therein a fan, a cylindrical handle for said casing embodying an electric motor, air passages through said handle and communicating with the fan chamber, and an attachment extension at the lower end of the handle for a detachable electrical coupling

2. A combined heater and blower, comprising a casing having at one end a fan and at the other a discharge passage, a hollow handle having open communication with the fan end of the casing and provided with air-intake openings at its lower end, an electric heater within the discharge end of said casing, and an electric motor within said handle in driving connection with said fan.

3. A combined heater and blower, comprising a fan casing having a lateral discharge passage at one side and a cylindrical handle at its bottom and provided with air openings in its upper side and an air-intake controlling device for said openings, an air passage through said handle and com-

municating with said casing, a rotatable fan and an electric heater within said casing, and an electric motor within said handle in driving connection with said fan.

4. A combined heater and blower, comprising a casing having at one end a fan and at the other a discharge passage, a handle secured to the casing at the fan end and having therein an electric motor, air passages through the handle and communicating with the casing, and an electric heater within the discharge end of the casing.

In testimony whereof we have signed our names to this specification.

ERVIN J. RUST.
S. TRUMAN RINKER.