US007585321B2

(12) **United States Patent**
Cribier

(10) **Patent No.: US 7,585,321 B2**
(45) **Date of Patent: Sep. 8, 2009**

(54) **METHODS OF IMPLANTING A PROSTHETIC HEART VALVE WITHIN A NATIVE HEART VALVE**

(75) Inventor: **Alain Cribier**, Maromme (FR)

(73) Assignee: **Edwards Lifesciences PVT, Inc.**, Irvine, CA (US)

(*) Notice: Subject to any disclaimer, the term of this patent is extended or adjusted under 35 U.S.C. 154(b) by 547 days.

(21) Appl. No.: **11/139,356**

(22) Filed: **May 27, 2005**

(65) **Prior Publication Data**

US 2005/0251251 A1 Nov. 10, 2005

Related U.S. Application Data

(63) Continuation-in-part of application No. 10/139,741, filed on May 2, 2002, now Pat. No. 6,908,481, which is a continuation of application No. 09/795,803, filed on Feb. 28, 2001, now abandoned, which is a continuation of application No. 09/345,824, filed on Jun. 30, 1999, now abandoned, which is a continuation of application No. PCT/EP97/07337, filed on Dec. 31, 1997.

(30) **Foreign Application Priority Data**

Dec. 31, 1996 (EP) 96402929

(51) **Int. Cl.**
A61F 2/24 (2006.01)

(52) **U.S. Cl.** **623/2.14**; 623/2.15; 623/904

(58) **Field of Classification Search** 623/2.11–2.2, 623/2.34–2.41, 2.42, 904
See application file for complete search history.

(56) **References Cited**

U.S. PATENT DOCUMENTS

3,143,742 A 8/1964 Cromie

3,409,013 A 11/1968 Berry

(Continued)

FOREIGN PATENT DOCUMENTS

DE 2246526 3/1973

(Continued)

OTHER PUBLICATIONS

Stassano et al. Mid-term results of the valve-on-valve technique for bioprosthetic failure. Eur J Cardiothorac Surg 2000; 18:453-457.*

(Continued)

Primary Examiner—Thomas J Sweet
Assistant Examiner—Suba Ganesan
(74) *Attorney, Agent, or Firm*—David L. Hauser

(57) **ABSTRACT**

A valve prosthesis which is especially useful in the case of aortic stenosis and capable of resisting the powerful recoil force and to stand the forceful balloon inflation performed to deploy the valve and to embed it in the aortic annulus, comprises a collapsible valvular structure and an expandable frame on which said valvular structure is mounted. The valvular structure is composed of physiologically compatible valvular tissue that is sufficiently supple and resistant to allow the valvular structure to be deformed from a closed state to an opened state. The valvular tissue forms a continuous surface and is provided with strut members that create stiffened zones which induce the valvular structure to follow a patterned movement in its expansion to its opened state and in its turning back to its closed state.

25 Claims, 19 Drawing Sheets

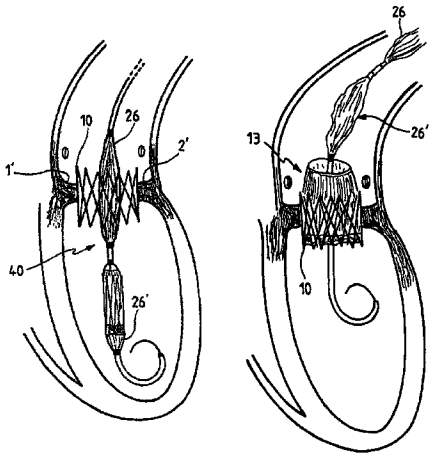

Edwards v. Aortic Innovations
U.S. Patent 11,491,033
Edwards Ex. 1045

U.S. PATENT DOCUMENTS

3,548,417	A	12/1970	Kisher
3,587,115	A	6/1971	Shiley
3,657,744	A	4/1972	Ersek
3,671,979	A	6/1972	Moulopoulos
3,714,671	A	2/1973	Edwards et al.
3,755,823	A	9/1973	Hancock
3,997,923	A	12/1976	Possis
4,035,849	A	7/1977	Angell et al.
4,056,854	A	11/1977	Boretos et al.
4,106,129	A	8/1978	Carpentier et al.
4,222,126	A	9/1980	Boretos et al.
4,265,694	A	5/1981	Boretos et al.
4,297,749	A	11/1981	Davis et al.
4,339,831	A	7/1982	Johnson
4,343,048	A	8/1982	Ross et al.
4,345,340	A	8/1982	Rosen
4,373,216	A	2/1983	Klawitter
4,406,022	A	9/1983	Roy
4,470,157	A	9/1984	Love
4,484,579	A	11/1984	Meno et al.
4,535,483	A	8/1985	Klawitter et al.
4,574,803	A	3/1986	Storz
4,592,340	A	6/1986	Boyles
4,605,407	A	8/1986	Black et al.
4,612,011	A	9/1986	Kautzky
4,643,732	A	2/1987	Pietsch et al.
4,655,771	A	4/1987	Wallsten
4,680,031	A	7/1987	Alonso
4,692,164	A	9/1987	Dzemeshkevich et al.
4,705,516	A	11/1987	Barone
4,733,665	A	3/1988	Palmaz
4,759,758	A	7/1988	Gabbay
4,777,951	A	10/1988	Cribier et al.
4,787,899	A	11/1988	Lazarus
4,787,901	A	11/1988	Baykut
4,790,843	A	12/1988	Carpentier
4,796,629	A	1/1989	Grayzel
4,829,990	A	5/1989	Thuroff et al.
4,851,001	A	7/1989	Taheri
4,856,516	A	8/1989	Hillstead
4,878,495	A	11/1989	Grayzel
4,878,906	A	11/1989	Lindemann et al.
4,883,458	A	11/1989	Shiber
4,909,252	A	3/1990	Goldberger
4,922,905	A	5/1990	Strecker
4,966,604	A	10/1990	Reiss
4,979,939	A	12/1990	Shiber
4,986,830	A	1/1991	Owens et al.
4,994,077	A	2/1991	Dobben
5,007,896	A	4/1991	Shiber
5,026,366	A	6/1991	Leckrone
5,032,128	A	7/1991	Alonso
5,037,434	A	8/1991	Lane
5,047,041	A	9/1991	Samuels
5,059,177	A	10/1991	Towne et al.
5,080,668	A	1/1992	Bolz et al.
5,085,635	A	2/1992	Cragg
5,089,015	A	2/1992	Ross
5,141,494	A	8/1992	Danforth et al.
5,152,771	A	10/1992	Sabbaghian et al.
5,159,937	A	11/1992	Tremulis
5,163,953	A	11/1992	Vince
5,167,628	A	12/1992	Boyles
5,282,847	A	2/1994	Trescony et al.
5,295,958	A	3/1994	Shturman
5,332,402	A	7/1994	Teitelbaum
5,360,444	A	11/1994	Kusuhara
5,370,685	A	12/1994	Stevens
5,397,351	A	3/1995	Pavcnik et al.
5,411,552	A	5/1995	Andersen et al.
5,443,446	A	8/1995	Shturman
5,480,424	A	1/1996	Cox
5,500,014	A	3/1996	Quijano et al.
5,545,209	A	8/1996	Roberts et al.
5,545,214	A	8/1996	Stevens
5,549,665	A	8/1996	Vesely
5,554,185	A	9/1996	Block et al.
5,571,175	A	11/1996	Vanney et al.
5,591,195	A	1/1997	Taheri et al.
5,607,464	A	3/1997	Trescony et al.
5,609,626	A	3/1997	Quijano et al.
5,716,370	A	2/1998	Williamson
5,716,417	A	2/1998	Girard et al.
5,728,068	A	3/1998	Leone et al.
5,749,890	A	5/1998	Shaknovich
5,756,476	A *	5/1998	Epstein et al. 514/44
5,769,812	A	6/1998	Stevens et al.
5,840,081	A	11/1998	Andersen et al.
5,855,597	A	1/1999	Jayaraman
5,855,601	A	1/1999	Bessler et al.
5,855,602	A	1/1999	Angell
5,925,063	A	7/1999	Khosravi
5,957,949	A	9/1999	Leonhardt et al.
6,027,525	A	2/2000	Suh et al.
6,042,607	A	3/2000	Williamson
6,132,473	A	10/2000	Williams et al.
6,168,614	B1	1/2001	Andersen et al.
6,171,335	B1	1/2001	Wheatley et al.
6,221,091	B1	4/2001	Khosravi
6,245,102	B1	6/2001	Jayaraman
6,299,637	B1	10/2001	Shaolian et al.
6,302,906	B1	10/2001	Goicoechea et al.
6,425,916	B1	7/2002	Garrison et al.
6,440,164	B1	8/2002	DiMatteo et al.
6,454,799	B1	9/2002	Schreck
6,458,153	B1	10/2002	Bailey et al.
6,461,382	B1	10/2002	Cao
6,468,660	B2	10/2002	Ogle et al.
6,482,228	B1	11/2002	Norred
6,488,704	B1	12/2002	Connelly et al.
6,569,196	B1	5/2003	Vesely
6,605,112	B1	8/2003	Moll et al.
6,730,118	B2	5/2004	Spenser et al.
6,769,434	B2	8/2004	Liddicoat
6,786,925	B1	9/2004	Schoon
6,790,229	B1	9/2004	Berreklouw
6,797,002	B2	9/2004	Spence
6,821,297	B2	11/2004	Snyders
6,830,584	B1	12/2004	Seguin
6,830,585	B1	12/2004	Artof
6,866,650	B2	3/2005	Stevens
6,872,223	B2	3/2005	Roberts
6,875,231	B2	4/2005	Anduiza
6,893,460	B2	5/2005	Spenser et al.
6,908,481	B2	6/2005	Cribier
6,951,571	B1	10/2005	Srivastava
7,011,681	B2	3/2006	Vesely
2001/0002445	A1	5/2001	Vesely
2001/0007956	A1	7/2001	Letac et al.
2001/0010017	A1	7/2001	Letac et al.
2001/0021872	A1	9/2001	Bailey et al.
2002/0029014	A1	3/2002	Jayaraman
2002/0032481	A1	3/2002	Gabbay
2002/0042651	A1	4/2002	Liddicoat
2002/0107565	A1	8/2002	Greenhalgh
2002/0138138	A1	9/2002	Yang
2003/0069492	A1	4/2003	Abrams et al.
2003/0109924	A1	6/2003	Cribier
2004/0029436	A1	2/2004	Spenser et al.
2004/0093060	A1	5/2004	Seguin et al.
2004/0097788	A1	5/2004	Mourlas et al.
2004/0111096	A1	6/2004	Tu
2004/0117009	A1	6/2004	Cali
2004/0122516	A1	6/2004	Fogarty

2004/0138743	A1	7/2004	Myers
2004/0167573	A1	8/2004	Williamson
2004/0167620	A1	8/2004	Ortiz
2004/0176840	A1	9/2004	Langberg
2004/0186558	A1	9/2004	Pavcnik
2004/0186563	A1	9/2004	Lobbi
2004/0193261	A1	9/2004	Berreklouw
2004/0210304	A1	10/2004	Seguin et al.
2004/0210306	A1	10/2004	Quijano
2004/0210307	A1	10/2004	Khairkhahan
2004/0215333	A1	10/2004	Duran
2004/0225353	A1	11/2004	McGuckin, Jr.
2004/0225354	A1	11/2004	Allen .
2004/0225355	A1	11/2004	Stevens
2004/0260390	A1	12/2004	Sarac
2005/0010287	A1	1/2005	Macoviak
2005/0021136	A1	1/2005	Xie
2005/0033398	A1	2/2005	Seguin
2005/0043757	A1	2/2005	Arad
2005/0043790	A1	2/2005	Seguin
2005/0049692	A1	3/2005	Numamoto
2005/0049696	A1	3/2005	Siess
2005/0055088	A1	3/2005	Liddicoat
2005/0060029	A1	3/2005	Le
2005/0065594	A1	3/2005	DiMatteo
2005/0075584	A1	4/2005	Cali
2005/0075712	A1	4/2005	Biancucci
2005/0075717	A1	4/2005	Nguyen
2005/0075719	A1	4/2005	Bergheim
2005/0075724	A1	4/2005	Svanidze
2005/0075725	A1	4/2005	Rowe
2005/0075730	A1	4/2005	Myers
2005/0075731	A1	4/2005	Artof
2005/0096738	A1	5/2005	Cali
2005/0113910	A1	5/2005	Paniagua
2005/0131438	A1	6/2005	Cohn
2005/0137683	A1	6/2005	Hezi-Yamit et al.
2005/0137686	A1	6/2005	Salahieh
2005/0137692	A1	6/2005	Haug
2005/0137695	A1	6/2005	Salahieh
2005/0143807	A1	6/2005	Pavcnik
2005/0143809	A1	6/2005	Salahieh
2005/0165477	A1	7/2005	Anduiza
2005/0165479	A1	7/2005	Drews
2005/0197695	A1	9/2005	Stacchino
2005/0203549	A1	9/2005	Realyvasquez
2005/0203614	A1	9/2005	Forster
2005/0203616	A1	9/2005	Cribier
2005/0203618	A1	9/2005	Sharkawy
2005/0228495	A1	10/2005	Macoviak
2005/0234546	A1	10/2005	Nugent
2005/0240200	A1	10/2005	Bergheim
2005/0240262	A1	10/2005	White
2008/0009940	A1	1/2008	Cribier

FOREIGN PATENT DOCUMENTS

DE	195 32 846	3/1997
DE	195 46 692	6/1997
DE	198 57 887	7/2000
DE	199 07 646	8/2000
DE	10049812	4/2002
DE	10049813	4/2002
DE	10049814	4/2002
DE	10049815	4/2002
EP	0 144167	6/1985
EP	0 597967	12/1994
EP	0 850607	7/1998
EP	1 057460	12/2000
EP	1 088529	4/2001
EP	1435879	7/2004
EP	1439800	7/2004
EP	1472996	11/2004
EP	1570809	9/2005
FR	2788217	7/2000
GB	2056023	3/1981
SU	1271508	11/1986
WO	WO 91/17720	11/1991
WO	WO 92/17118	10/1992
WO	WO 93/001768	2/1993
WO	WO 98/29057	7/1998
WO	WO 99/33414	7/1999
WO	WO 99/40964	8/1999
WO	WO 99/47075	9/1999
WO	WO 00/41652	7/2000
WO	WO 00/47139	8/2000
WO	WO 02/036048	10/2000
WO	WO 01/49213	7/2001
WO	WO 01/54625	8/2001
WO	WO 01/62189	8/2001
WO	WO 01/64137	9/2001
WO	WO 01/97715	12/2001
WO	WO 02/41789	5/2002
WO	WO 02/43620	6/2002
WO	WO 02/47575	6/2002
WO	WO 03/003949	1/2003
WO	WO 03/011195	2/2003
WO	WO 03/094793	11/2003
WO	WO 2004/058106	7/2004
WO	WO 2004/089250	10/2004
WO	WO 2004/089253	10/2004
WO	WO 2004/093728	11/2004
WO	WO 2004/105651	12/2004
WO	WO 2005/002466	1/2005
WO	WO 2005/004753	1/2005
WO	WO 2005/009285	2/2005
WO	WO 2005/011534	2/2005
WO	WO 2005/011535	2/2005
WO	WO 2005/023155	3/2005
WO	WO 2005/027790	3/2005
WO	WO 2005/046528	5/2005
WO	WO 2005/046529	5/2005
WO	WO 2005/048883	6/2005
WO	WO 2005/096993	10/2005

OTHER PUBLICATIONS

Transcatheter Umbrella Closure of Valvular and Paravalvular Leaks, Hourihan et al., Journal of the American College of Cardiology, vol. 20, No. 6, pp. 1371-1377, (1992).

Claims 1-32 from U.S. Appl. No. 09/345,824, filed Jun. 30, 1999 (pp. 39-44.

Office Action from U.S. Appl. No. 09/345,824 mailed Aug. 29, 2000 (pp. 2-8).

Claims 33-49 from U.S. Appl. No. 09/795,803 located in Response to Office action mailed Sep. 5, 2001 (pp. 2-4).

Office action from U.S. Appl. No. 09/795,803 mailed Sep. 25, 2002 (7 sheets).

U.S. Appl. No. 11/942,690, filed Nov. 19, 2007.

Steven R. Bailey, "75 Percutaneous Expandable Prosthetic Valves", Textbook of Interventional Cardiology, 1994, vol. 2, Second Edition, W. B. Saunders Company, Philadelphia, PA, 11 sheets.

Andersen et al., "Transluminal implantation of artificial heart valves. Description of a new expandable aortic valve and initial results with implantation by catheter technique in closed chest pigs," European Heart Journal (1992) 13, pp. 704-708.

* cited by examiner

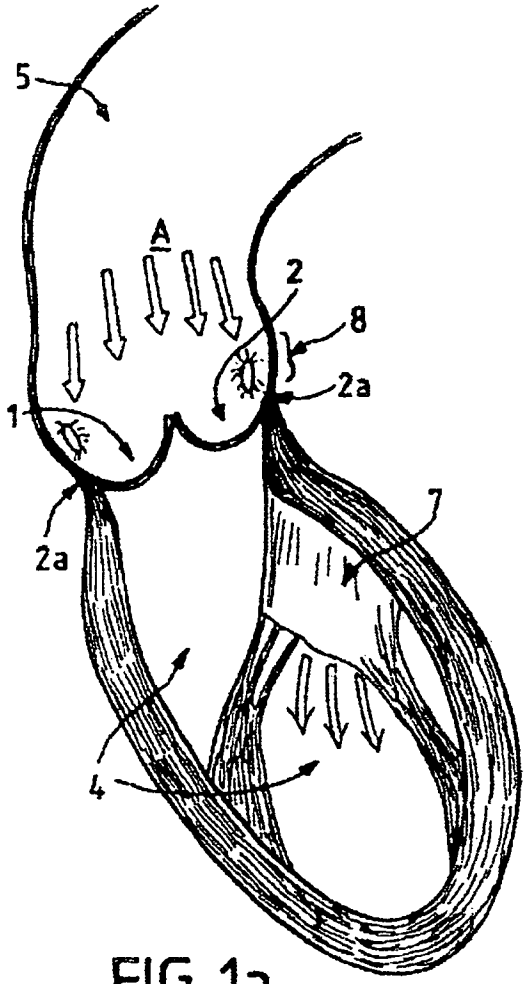

FIG_1a

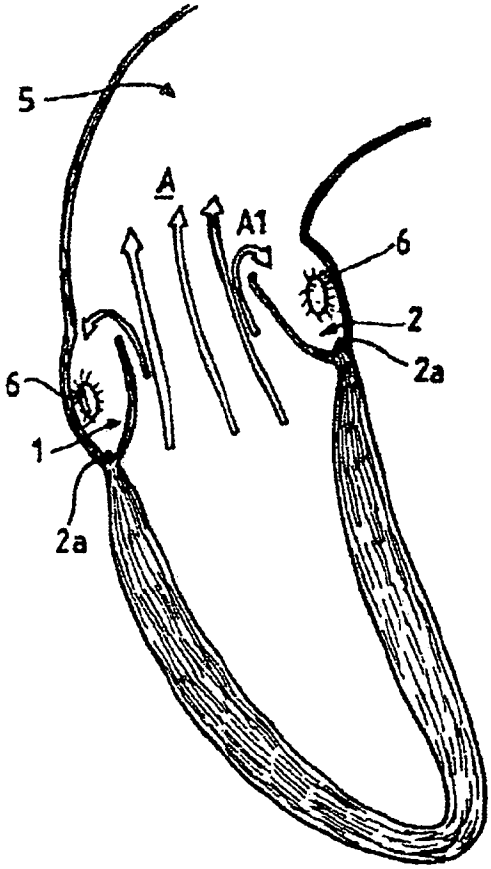

FIG_1b

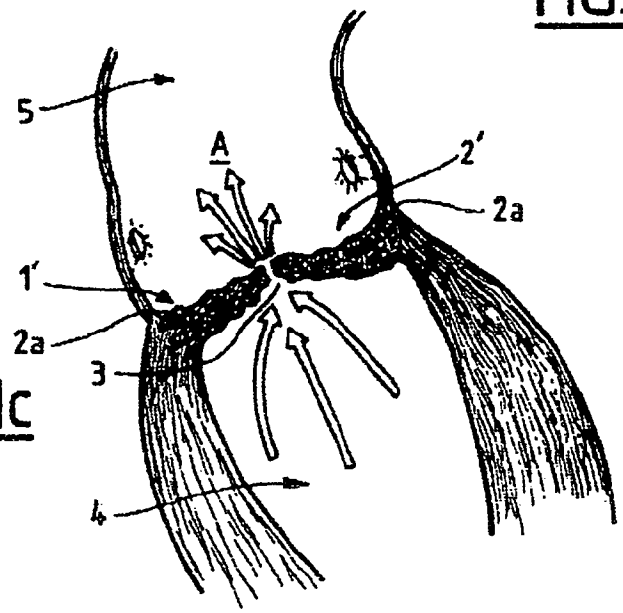

FIG_1c

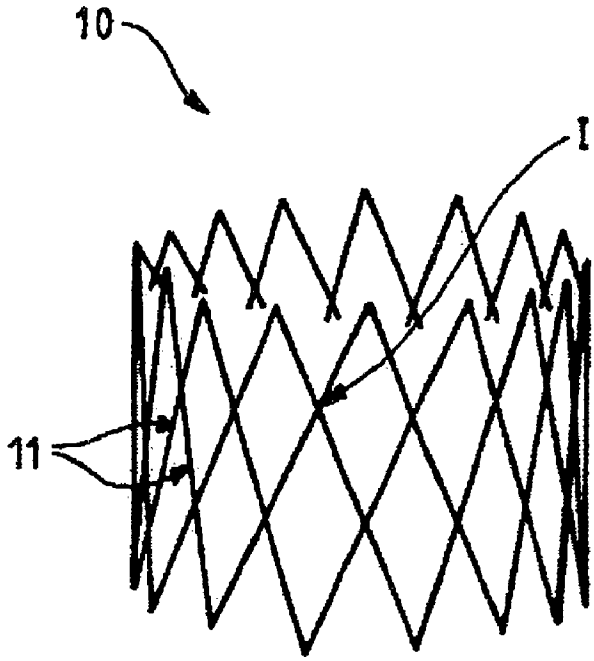

FIG_2a

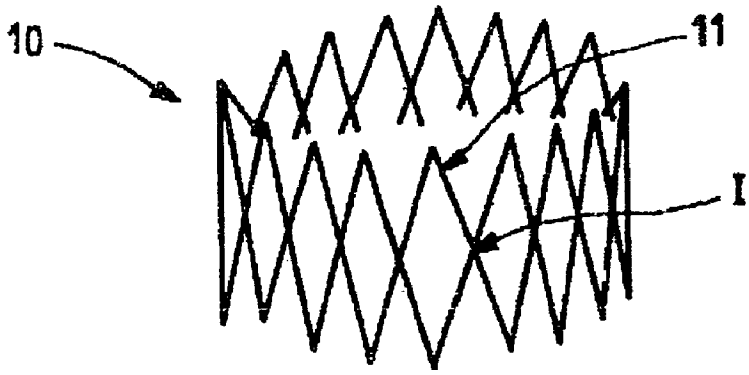

FIG_2b

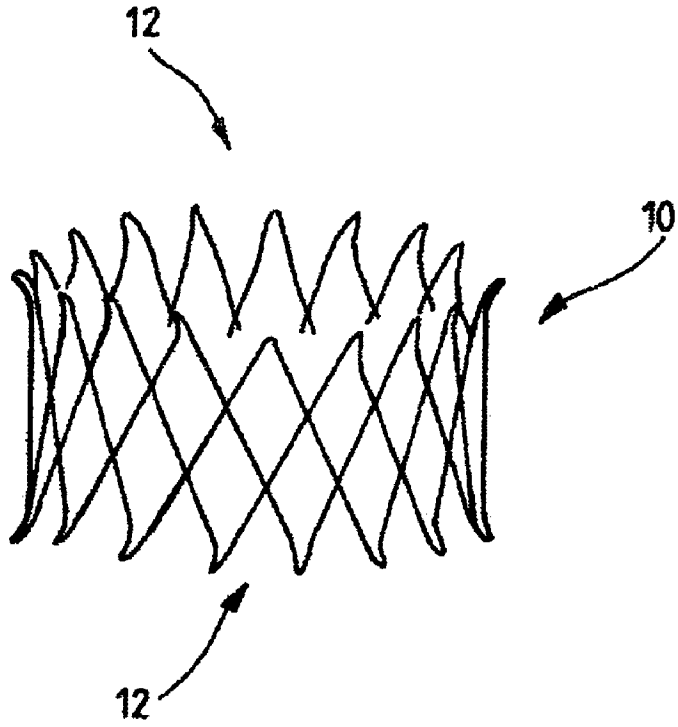

FIG_3a

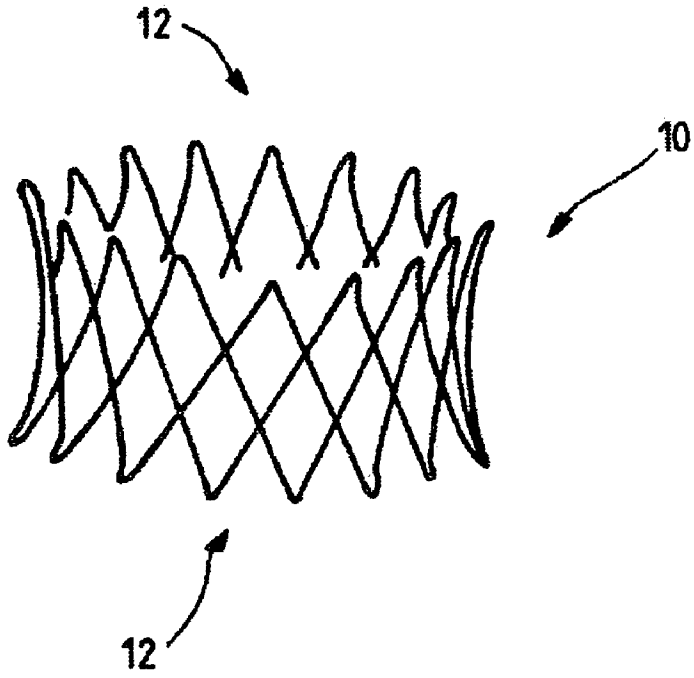

FIG_3b

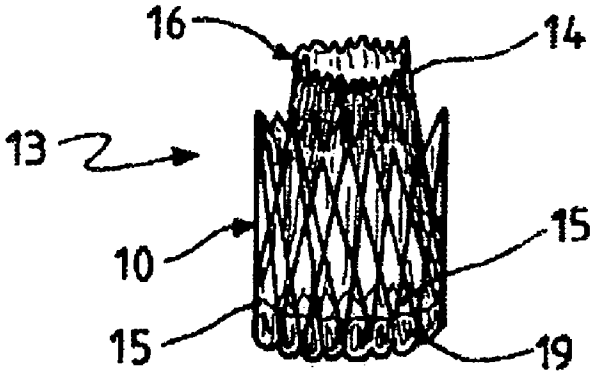

FIG_4a

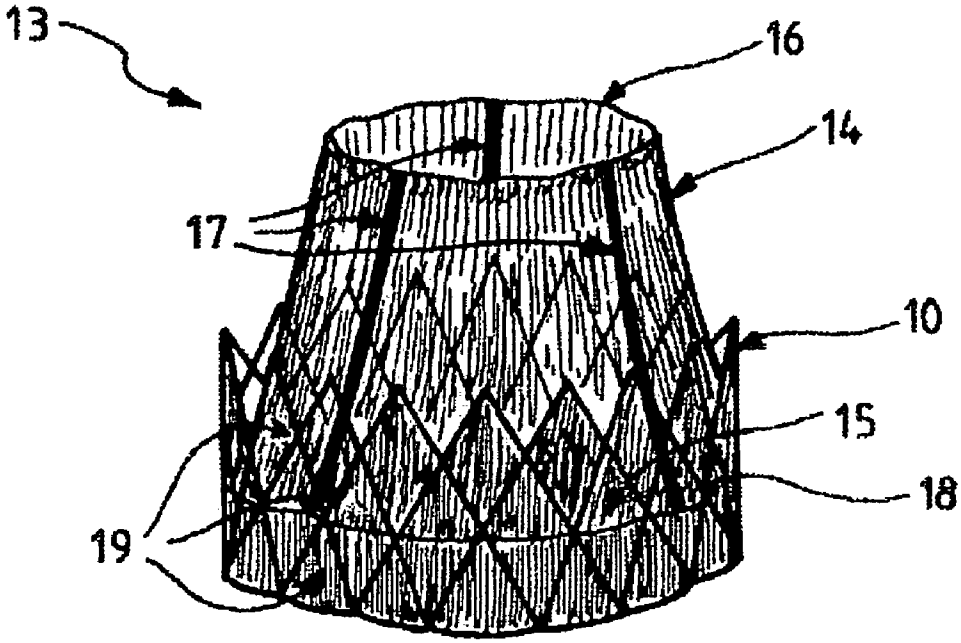

FIG_4b

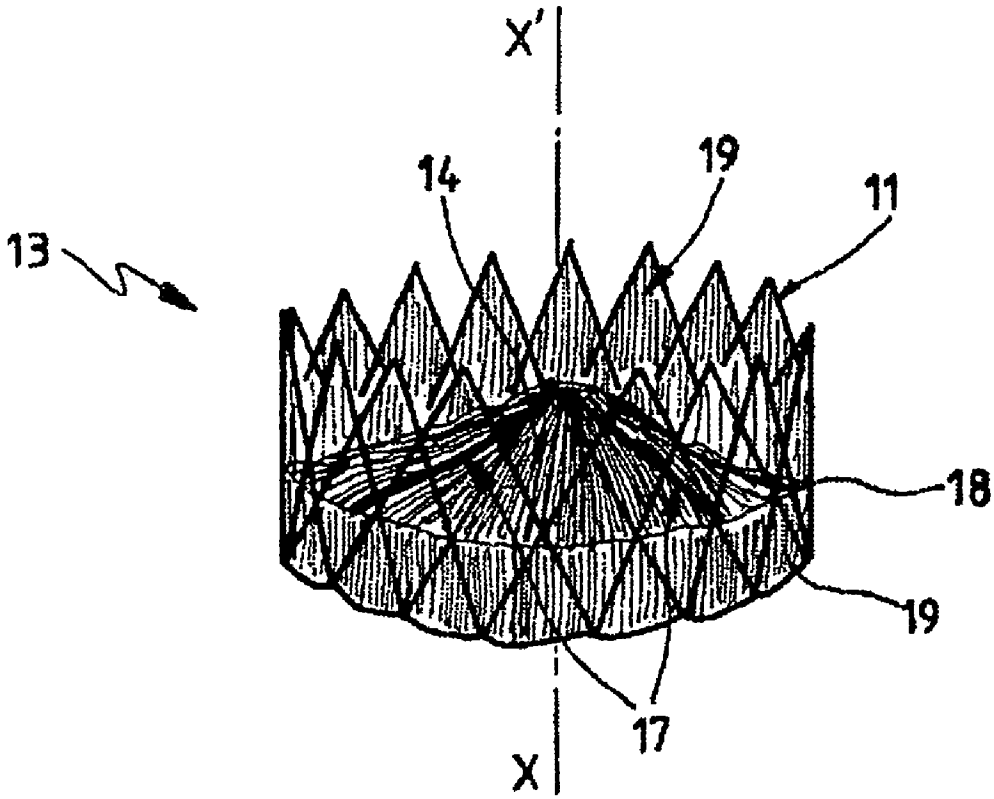

FIG_5a

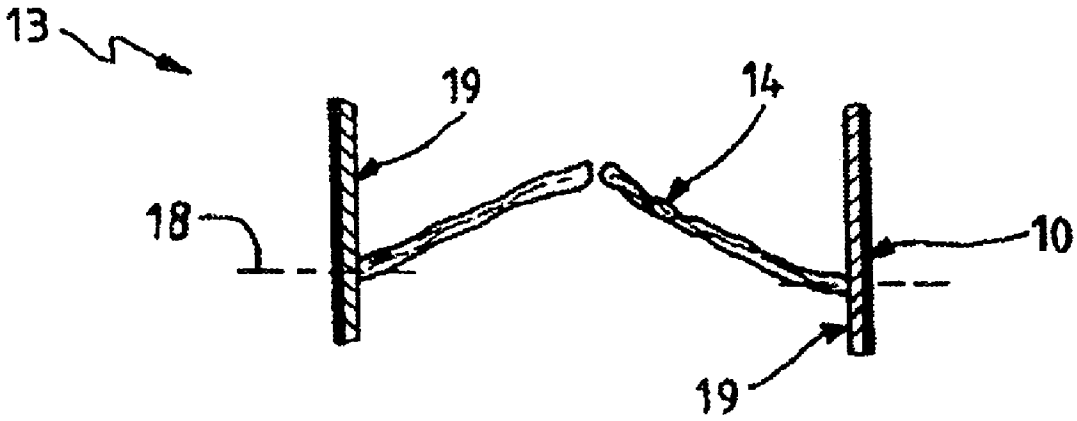

FIG_5b

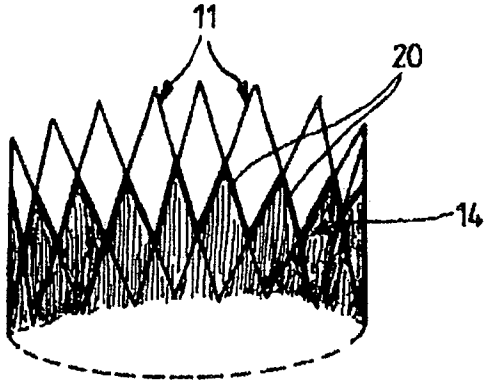

FIG_7

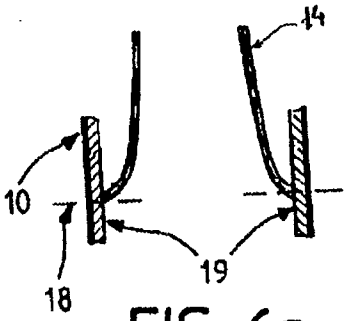

FIG_6a

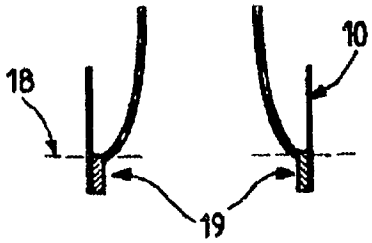

FIG_6b

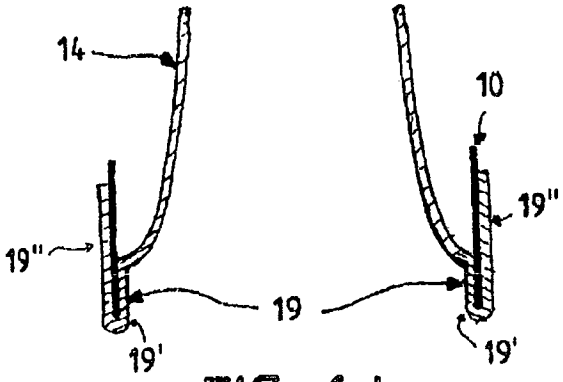

FIG_6d

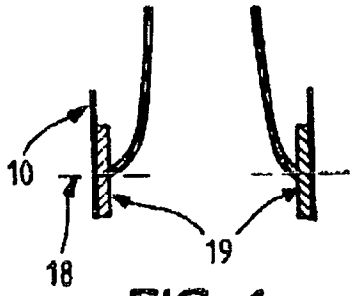

FIG_6c

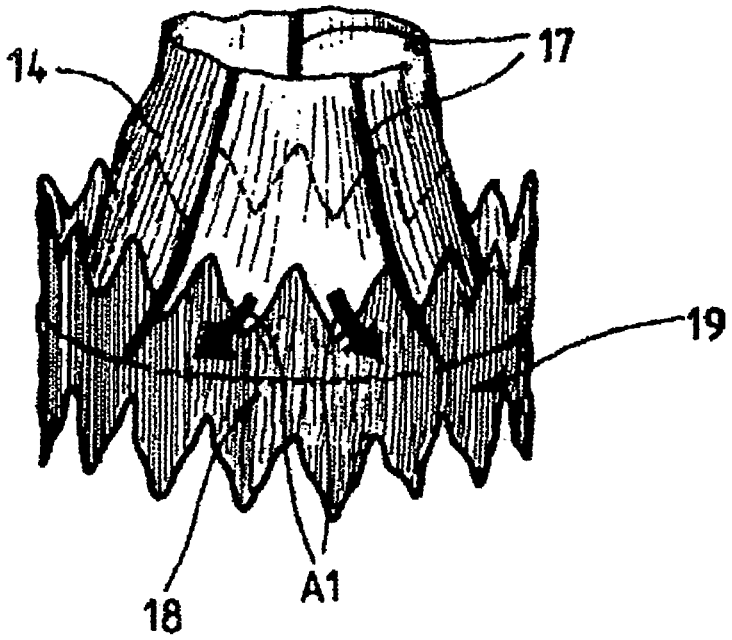

FIG_8a

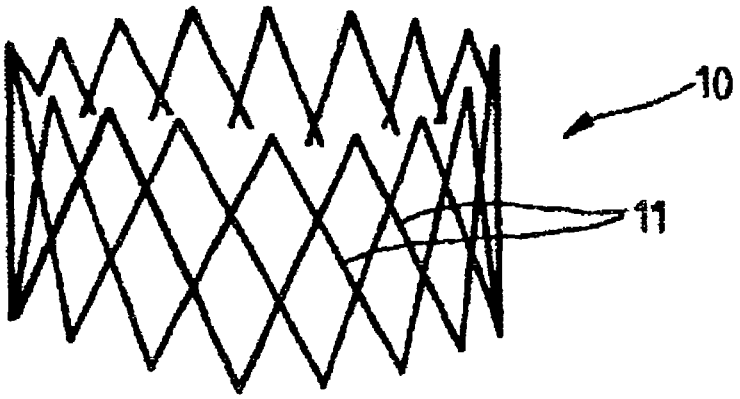

FIG_8b

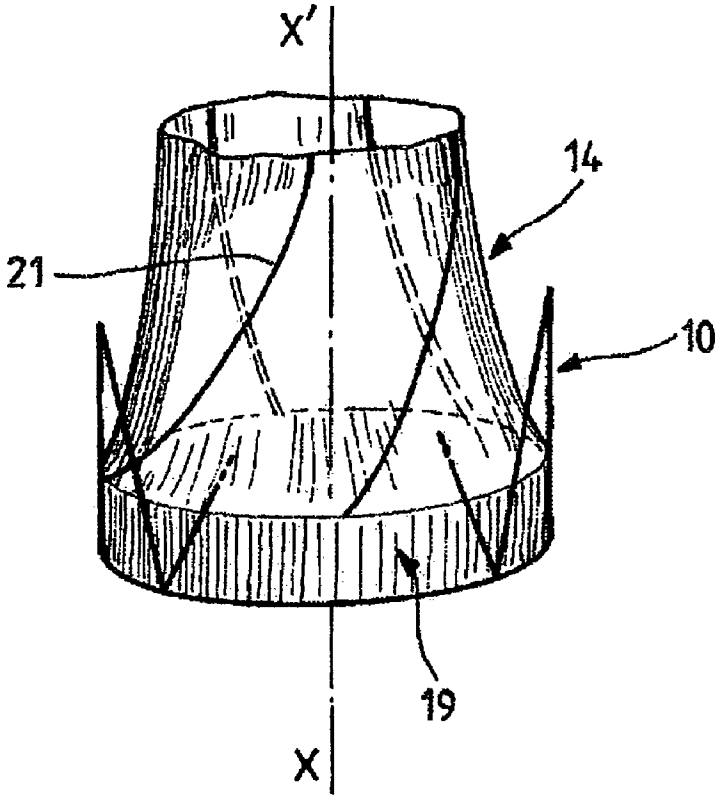

FIG_9a

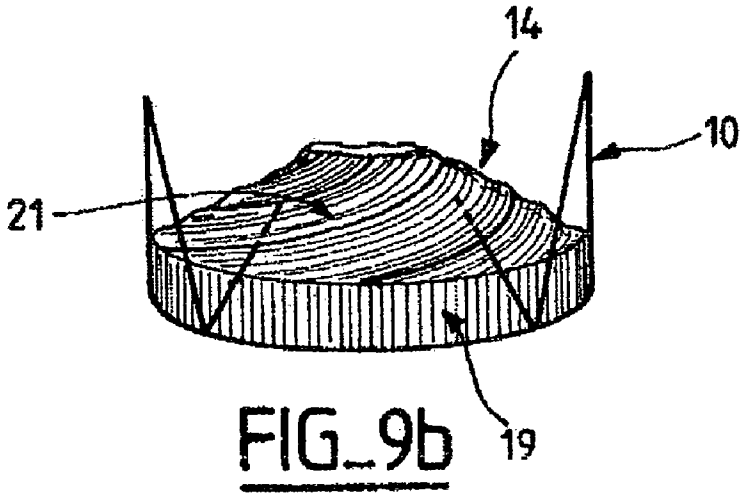

FIG_9b

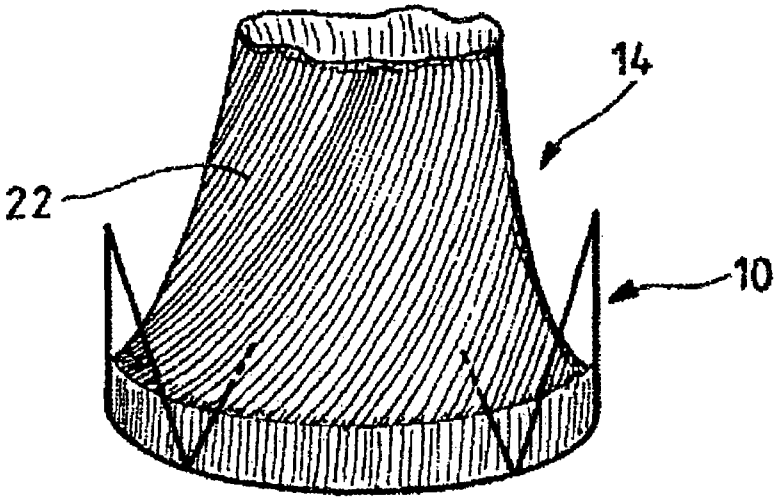

FIG_10a

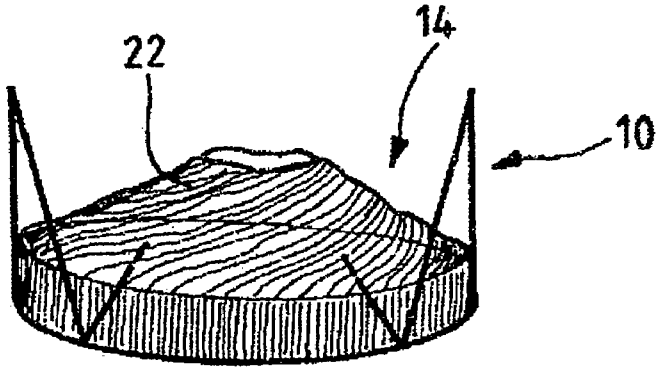

FIG_10b

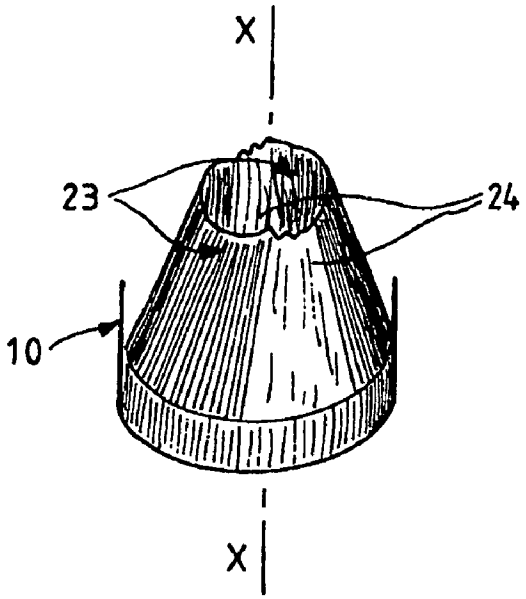

FIG_11a

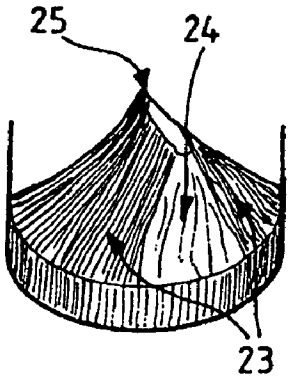

FIG_11b

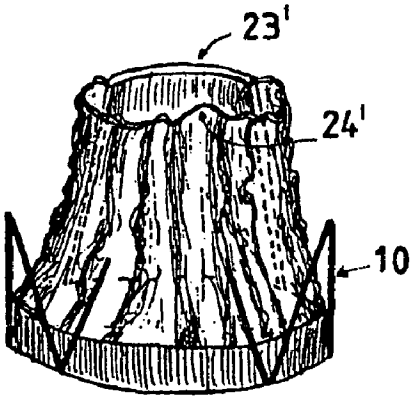

FIG_11c

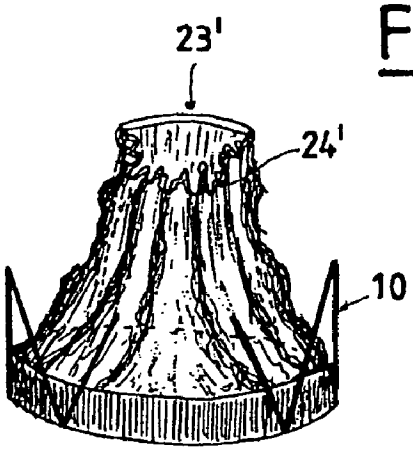

FIG_11d

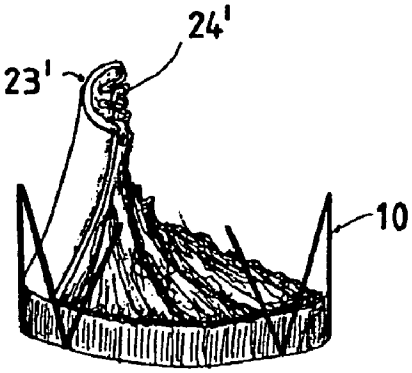

FIG_11e

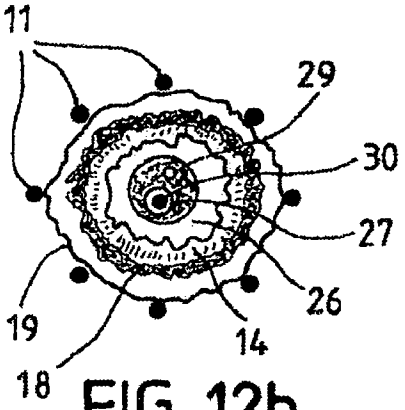

FIG_12b

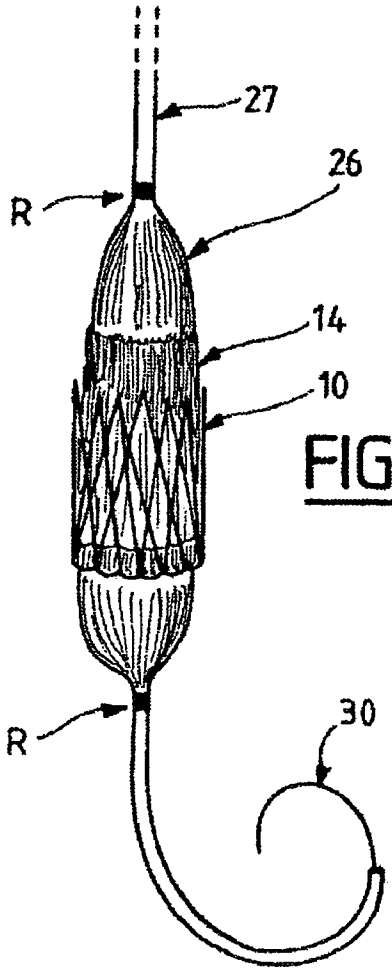

FIG_12a

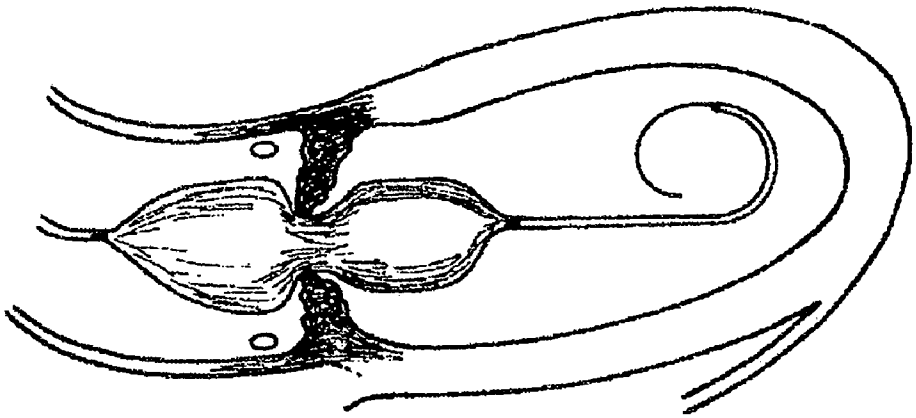

FIG_13c

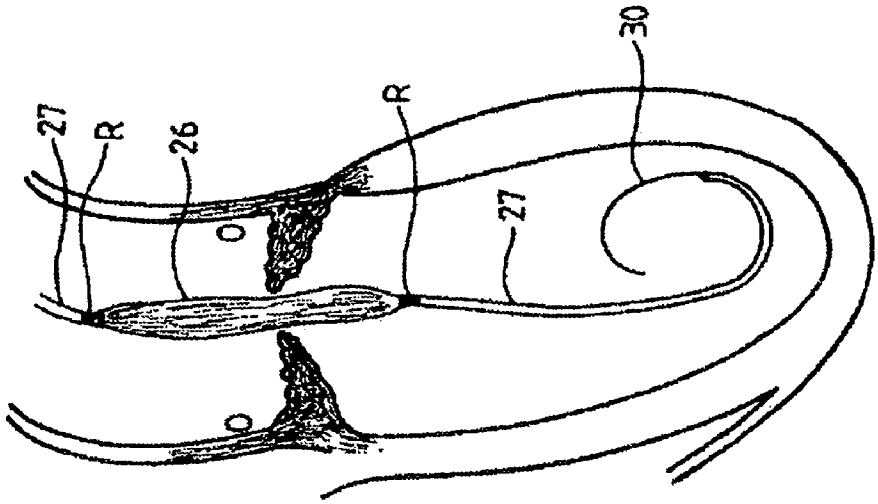

FIG_13b

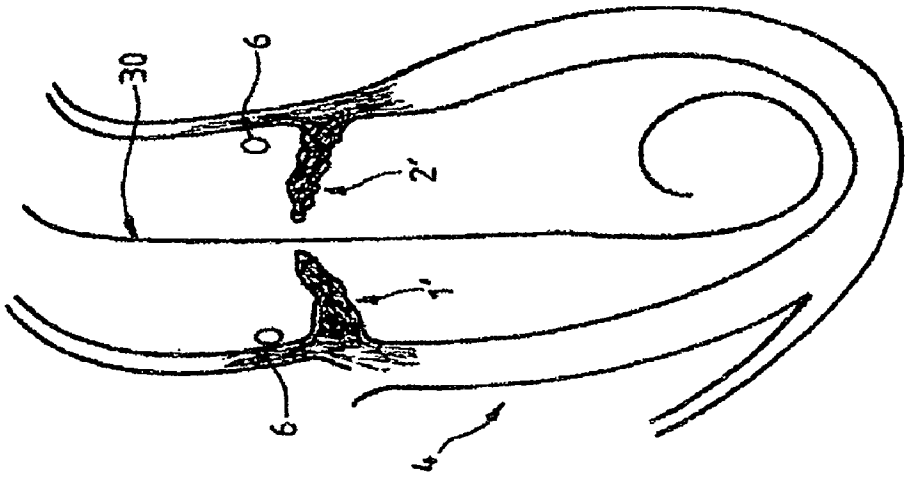

FIG_13a

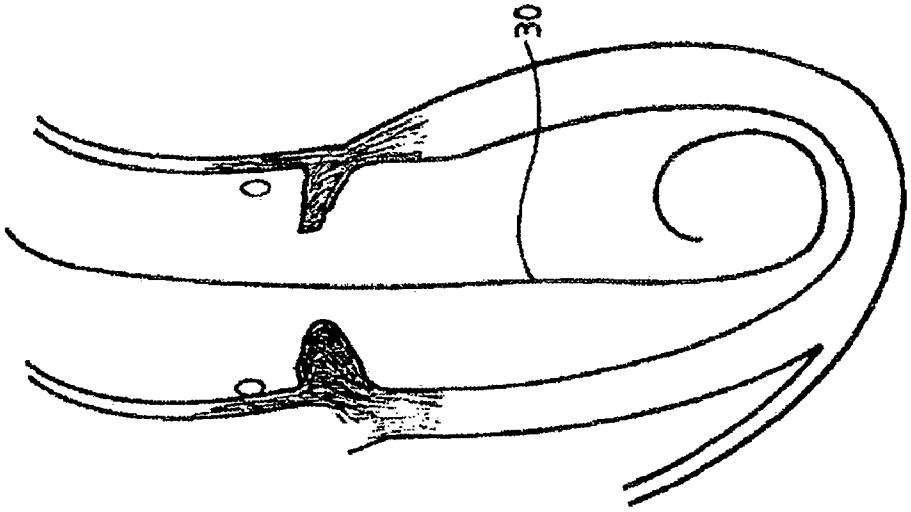

FIG_13f

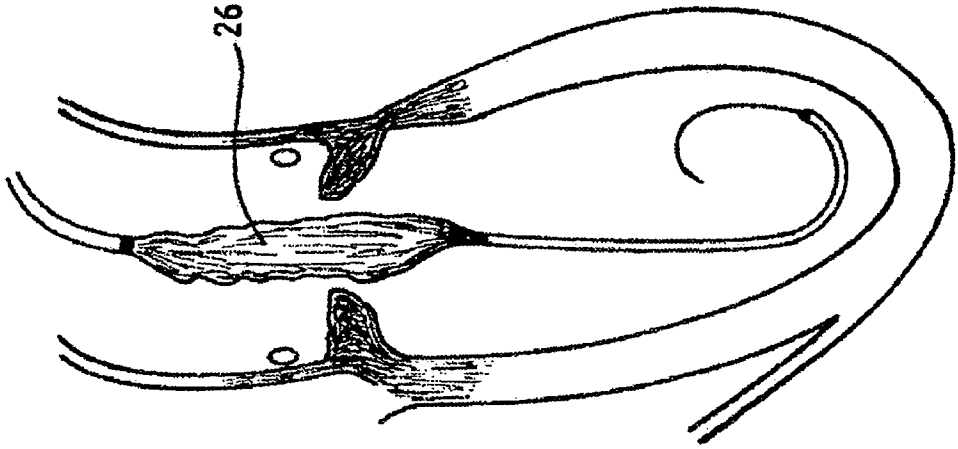

FIG_13e

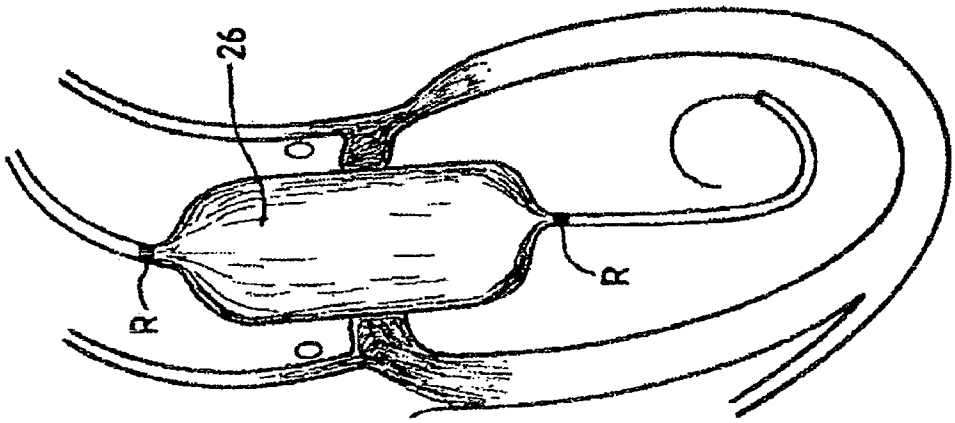

FIG_13d

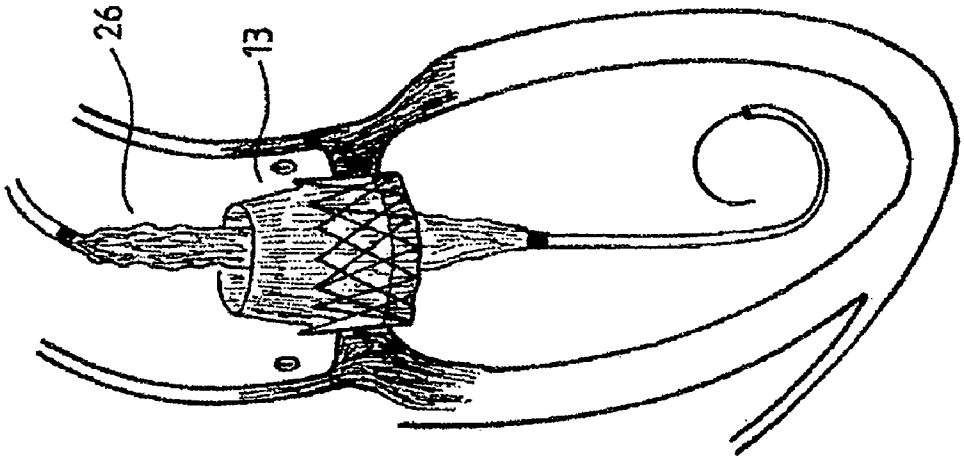

FIG_13i

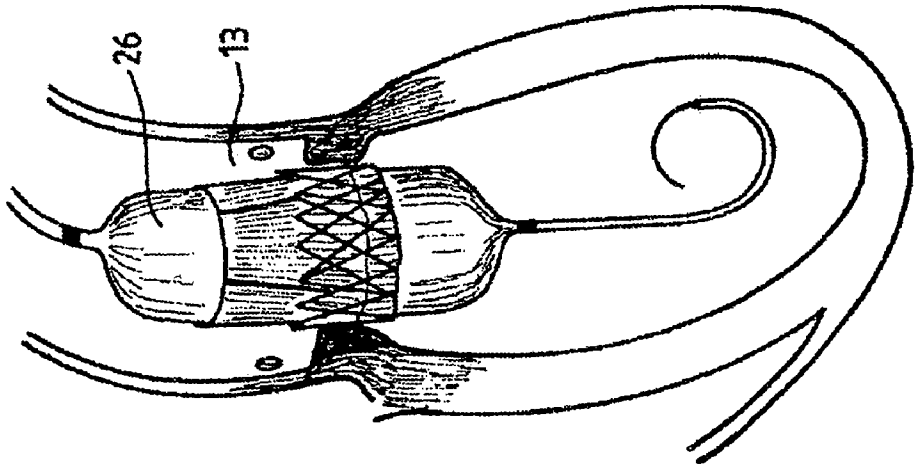

FIG_13h

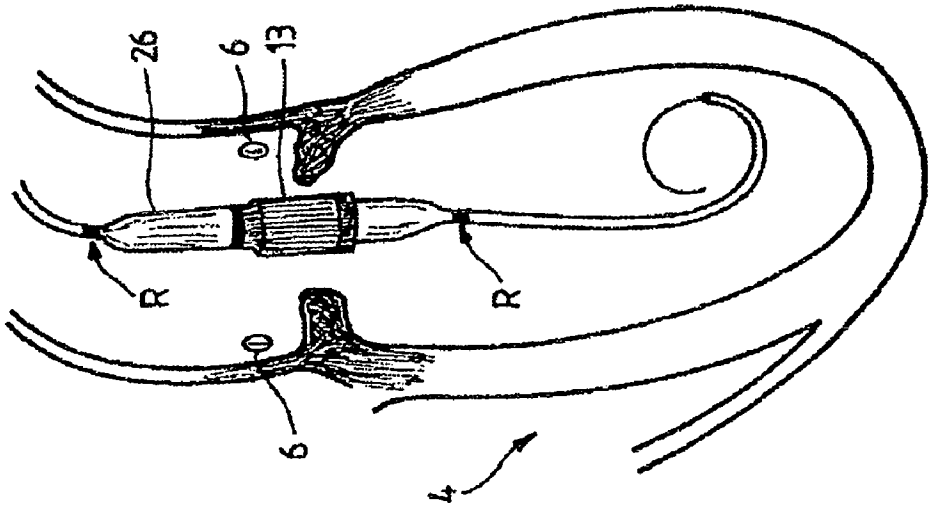

FIG_13g

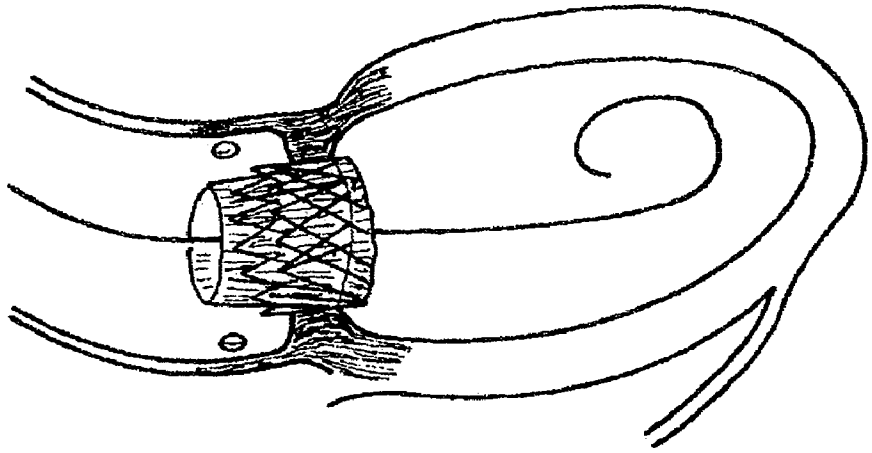

FIG_13l

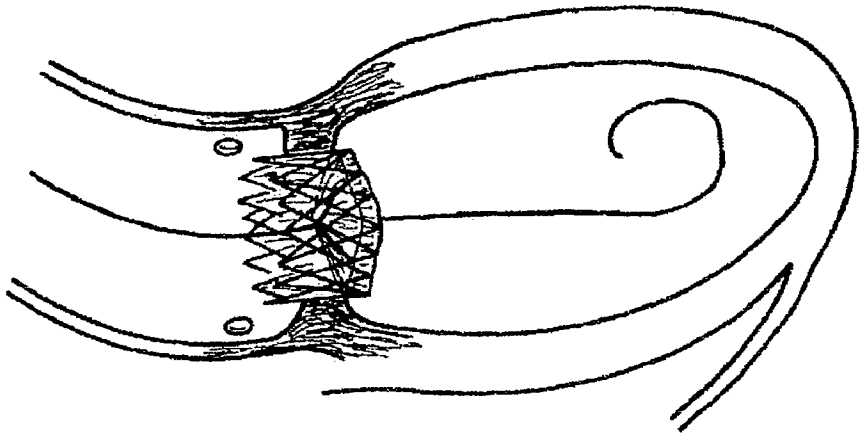

FIG_13k

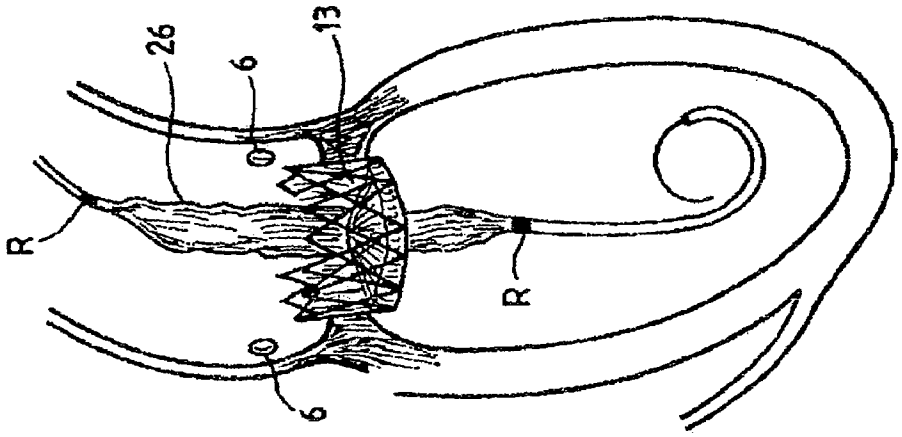

FIG_13j

FIG_14

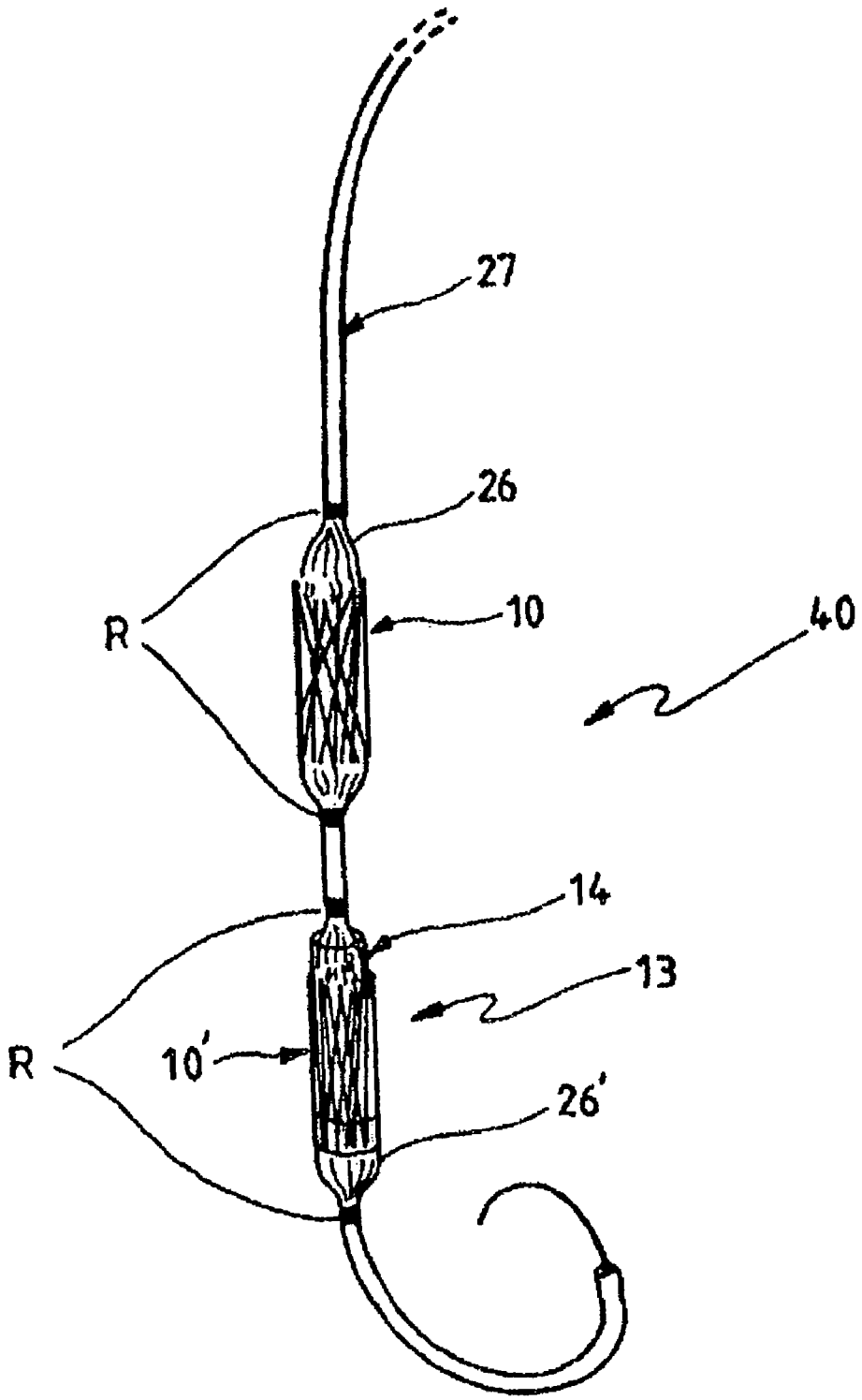

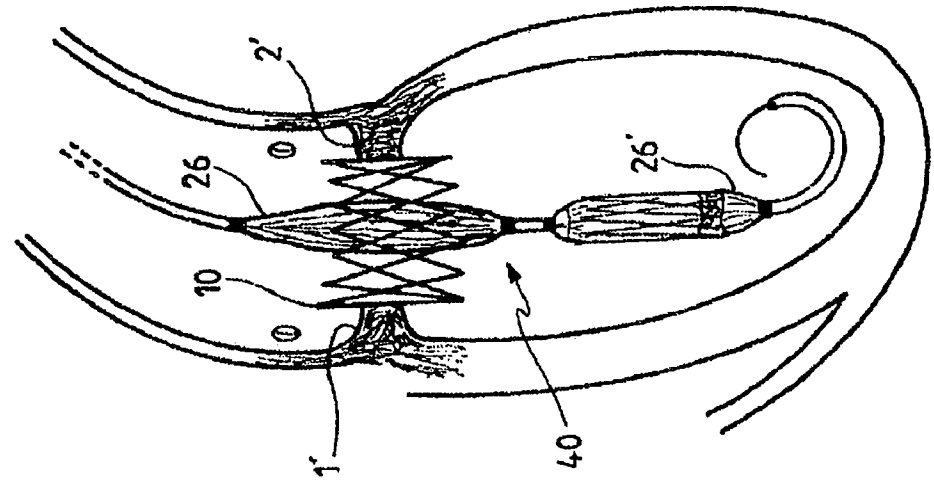

FIG_15c

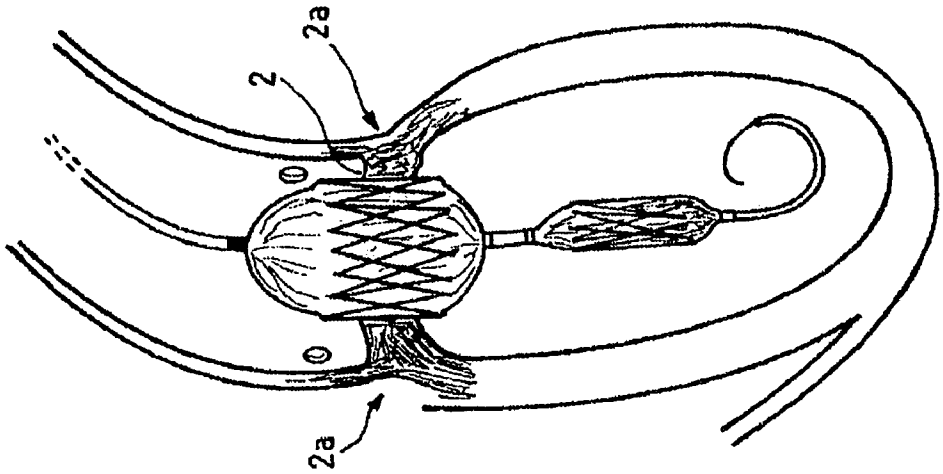

FIG_15b

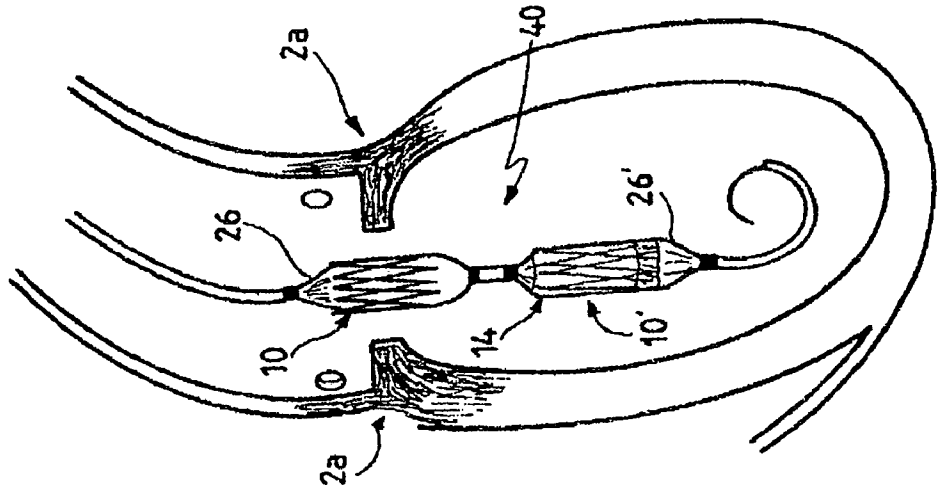

FIG_15a

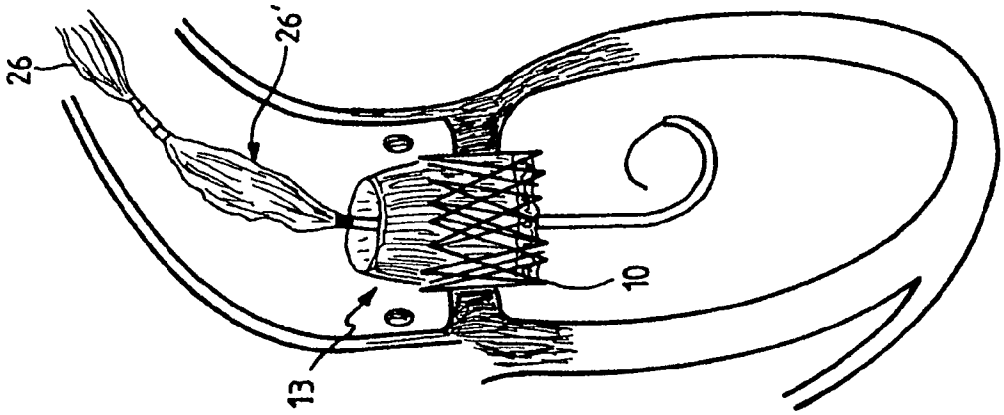

FIG_15f

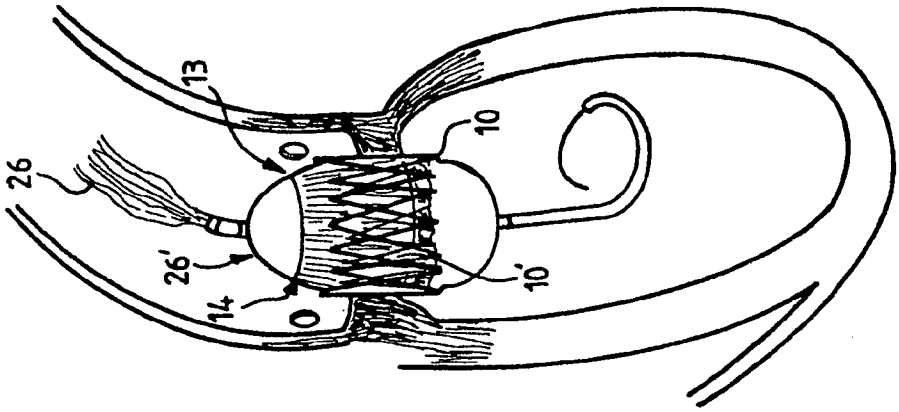

FIG_15e

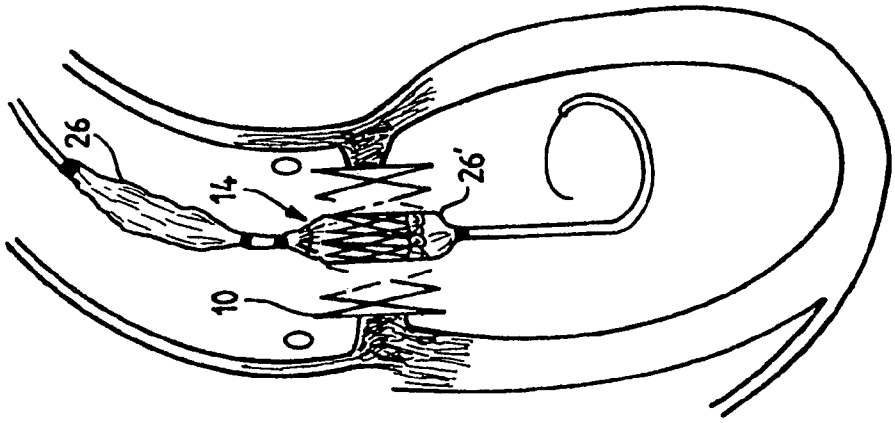

FIG_15d

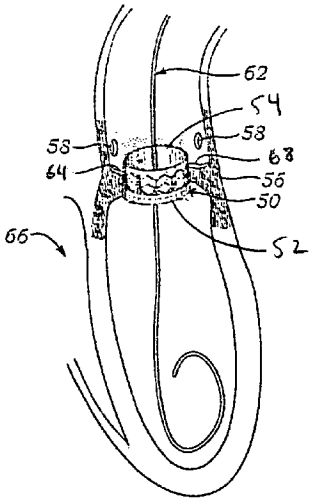

FIG-16a

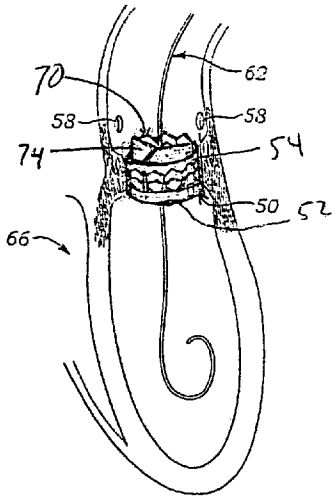

FIG-16b

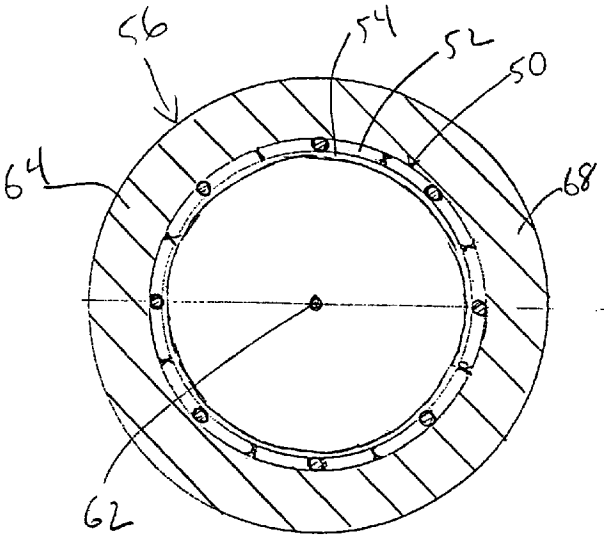

Figure 16C

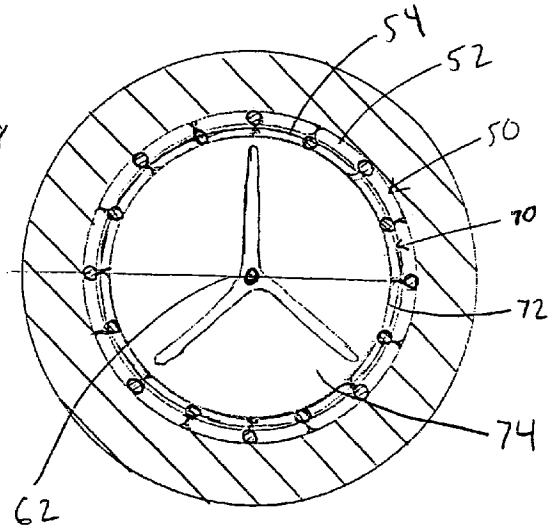

Figure 16d

METHODS OF IMPLANTING A PROSTHETIC HEART VALVE WITHIN A NATIVE HEART VALVE

CROSS-REFERENCE TO RELATED APPLICATIONS

The present application is a continuation-in-part of U.S. patent application Ser. No. 10/139,741, filed May 2, 2002, now issued as U.S. Pat. No. 6,908,481, which is a continuation of U.S. patent application Ser. No. 09/795,803, filed Feb. 28, 2001, now abandoned, which in turn is a continuation of U.S. patent application Ser No. 09/345,824, filed Jun. 30, 1999, now abandoned, which is a continuation of International application No. PCT/EP97/07337, filed Dec. 31, 1997, which designates the United States and was published in English by the International Bureau on Jul. 9, 1998 as WO 98/29057, all of which are incorporated herein by reference.

BACKGROUND OF THE INVENTION

The present invention relates to a valve prosthesis for implantation in body channels, more particularly but not only to, cardiac valve prosthesis to be implanted by a transcutaneous catheterization technique.

The valve prosthesis can be also applied to other body channels provided with native valves, such as veins or in organs (liver, intestine, urethra . . . .).

The present invention also relates to a method for implanting a valve prosthesis, such as the valve according to the present invention.

Implantable valves, which will be indifferently designated hereafter as "IV", "valve prosthesis" or "prosthetic valve", permits the reparation of a valvular defect by a less invasive technique in place of the usual surgical valve implantation which, in the case of valvular heart diseases, requires thoracotomy and extracorporeal circulation. A particular use for the IV concerns patients who cannot be operated on because of an associated disease or because of very old age or also patients who could be operated on but only at a very high risk.

Although the IV of the present invention and the process for implanting said IV can be used in various heart valve diseases, the following description will first concern the aortic orifice in aortic stenosis, more particularly in its degenerative form in elderly patients.

Aortic stenosis is a disease of the aortic valve in the left ventricle of the heart. The aortic valvular orifice is normally capable of opening during systole up to 4 to 6 cm^2, therefore allowing free ejection of the ventricular blood volume into the aorta. This aortic valvular orifice can become tightly stenosed, and therefore the blood cannot anymore be freely ejected from the left ventricle. In fact, only a reduced amount of blood can be ejected by the left ventricle which has to markedly increase the intra-cavitary pressure to force the stenosed aortic orifice. In such aortic diseases, the patients can have syncope, chest pain, and mainly difficulty in breathing. The evolution of such a disease is disastrous when symptoms of cardiac failure appear, since 50% of the patients die in the year following the first symptoms of the disease.

The only commonly available treatment is the replacement of the stenosed aortic valve by a prosthetic valve via surgery: this treatment moreover providing excellent results. If surgery is impossible to perform, i.e., if the patient is deemed inoperable or operable only at a too high surgical risk, an alternative possibility is to dilate the valve with a balloon catheter to enlarge the aortic orifice. Unfortunately, a good

result is obtained only in about half of the cases and there is a high restenosis rate, i.e., about 80% after one year.

Aortic stenosis is a very common disease in people above seventy years old and occurs more and more frequently as the subject gets older. As evidenced, the present tendency of the general evolution of the population is becoming older and older. Also, it can be evaluated, as a crude estimation, that about 30 to 50% of the subjects who are older than 80 years and have a tight aortic stenosis, either cannot be operated on for aortic valve replacement with a reasonable surgical risk or even cannot be considered at all for surgery.

It can be estimated that, about 30 to 40 persons out of a million per year, could benefit from an implantable aortic valve positioned by a catheterization technique. Until now, the implantation of a valve prosthesis for the treatment of aortic stenosis is considered unrealistic to perform since it is deemed difficult to superpose an implantable valve on the distorted stenosed native valve without excising the latter.

From 1985, the technique of aortic valvuloplasty with a balloon catheter has been introduced for the treatment of subjects in whom surgery cannot be performed at all or which could be performed only with a prohibitive surgical risk. Despite the considerable deformation of the stenosed aortic valve, commonly with marked calcification, it is often possible to enlarge significantly the aortic orifice by balloon inflation, a procedure which is considered as low risk.

However, this technique has been abandoned by most physicians because of the very high restenosis rate which occurs in about 80% of the patients within 10 to 12 months. Indeed, immediately after deflation of the balloon, a strong recoil phenomenon often produces a loss of half or even two thirds of the opening area obtained by the inflated balloon. For instance, inflation of a 20 mm diameter balloon in a stenosed aortic orifice of 0.5 cm^2 area gives, when forcefully and fully inflated, an opening area equal to the cross sectional area of the maximally inflated balloon, i.e., about 3 cm^2. However, measurements performed a few minutes after deflation and removal of the balloon have only an area around 1 cm^2 to 1.2 cm^2. This is due to the considerable recoil of the fibrous tissue of the diseased valve. The drawback in this procedure has also been clearly shown on fresh post mortem specimens.

However, it is important to note that whereas the natural normal aortic valve is able to open with an orifice of about 5 to 6 cm^2 and to accommodate a blood flow of more than 15 liter/minute during heavy exercise for instance, an opening area of about 1.5 to 2 cm^2 can accept a 6 to 8 liter/minute blood flow without a significant pressure gradient. Such a flow corresponds to the cardiac output of the elderly subject with limited physical activity.

Therefore, an IV would not have to produce a large opening of the aortic orifice since an opening about 2 cm^2 would be sufficient in most subjects, in particular in elderly subjects, whose cardiac output probably does not reach more than 6 to 8 liter/minute during normal physical activity. For instance, the surgically implanted mechanical valves have an opening area which is far from the natural valve opening that ranges from 2 to 2.5 cm^2, mainly because of the room taken by the large circular structure supporting the valvular part of the device.

The prior art describes examples of cardiac valves prosthesis that are aimed at being implanted without surgical intervention by way of catheterization. For instance, U.S. Pat. No. 5,411,552 describes a collapsible valve able to be introduced in the body in a compressed presentation and expanded in the right position by balloon inflation.

Such valves, with a semi-lunar leaflet design, tend to imitate the natural valve. However, this type of design is inher-

ently fragile, and such structures are not strong enough to be used in the case of aortic stenosis because of the strong recoil that will distort this weak structure and because they would not be able to resist the balloon inflation performed to position the implantable valve. Furthermore, this valvular structure is attached to a metallic frame of thin wires that will not be able to be tightly secured against the valve annulus. The metallic frame of this implantable valve is made of thin wires like in stents, which are implanted in vessels after balloon dilatation. Such a light stent structure is too weak to allow the implantable valve to be forcefully embedded into the aortic annulus. Moreover, there is a high risk of massive regurgitation (during the diastolic phase) through the spaces between the frame wires which is another prohibitive risk that would make this implantable valve impossible to use in clinical practice.

Furthermore, an important point in view of the development of the IV is that it is possible to maximally inflate a balloon placed inside the compressed implantable valve to expand it and insert it in the stenosed aortic valve up to about 20 to 23 mm in diameter. At the time of maximum balloon inflation, the balloon is absolutely stiff and cylindrical without any waist. At that moment, the implantable valve is squeezed and crushed between the strong aortic annulus and the rigid balloon with the risk of causing irreversible damage to the valvular structure of the implantable valve.

SUMMARY OF THE INVENTION

The invention is aimed to overcome these drawbacks and to implant an IV which will remain reliable for years.

A particular aim of the present invention is to provide an IV, especially aimed at being used in case of aortic stenosis, which structure is capable of resisting the powerful recoil force and to stand the forceful balloon inflation performed to deploy the IV and to embed it in the aortic annulus.

Another aim of the present invention is to provide an efficient prosthesic valve which can be implanted by a catheterization technique, in particular in a stenosed aortic orifice, taking advantage of the strong structure made of the distorted stenosed valve and of the large opening area produced by preliminary balloon inflation, performed as an initial step of the procedure.

A further aim of the present invention is to provide an implantable valve which would not produce any risk of fluid regurgitation.

A further aim of the present invention is to provide a valve prosthesis implantation technique using a two-balloon catheter and a two-frame device.

These aims are achieved according to the present invention which provides a valve prosthesis of the type mentioned in the introductory part and wherein said valve prosthesis comprises a collapsible continuous structure with guiding means providing stiffness and a frame to which said structure is fastened, said frame being strong enough to resist the recoil phenomenon of the fibrous tissue of the diseased valve.

The IV, which is strongly embedded, enables the implantable valve to be maintained in the right position without any risk of further displacement, which would be a catastrophic event.

More precisely, this valvular structure comprises a valvular tissue compatible with the human body and blood, which is supple and resistant to allow said valvular structure to pass from a closed state to an open state to allow a body fluid, more particularly the blood, exerting pressure on said valvular structure, to flow. The valvular tissue forms a continuous surface and is provided with guiding means formed or incorporated within, creating stiffened zones which induce the valvular structure to follow a patterned movement from its open position to its closed state and vice-versa, providing therefore a structure sufficiently rigid to prevent diversion, in particular into the left ventricle and thus preventing any regurgitation of blood into the left ventricle in case of aortic implantation.

Moreover, the guided structure of the IV of the invention allows the tissue of this structure to open and close with the same patterned movement while occupying as little space as possible in the closed state of the valve. Therefore, owing to these guiding means, the valvular structure withstands the unceasing movements under blood pressure changes during the heart beats.

More preferably, the valvular structure has a substantially truncated hyperboloidal shape in its expanded position, with a larger base and a growing closer neck, ending in a smaller extremity forming the upper part of the valvular structure. The valvular structure has a curvature at its surface that is concave towards the aortic wall. Such a shape produces a strong and efficient structure in view of the systolo-diastolic movement of the valvular tissue. Such a valvular structure with its simple and regular shape also lowers the risk of being damaged by forceful balloon inflation at the time of IV deployment.

A trunco-hyperboloidal shape with a small diameter at the upper extremity facilitates the closure of the valve at the beginning of diastole in initiating the starting of the reverse movement of the valvular tissue towards its base. Another advantage of this truncated hyperboloidal shape is that the upper extremity of the valvular structure, because of its smaller diameter, remains at a distance from the coronary ostia during systole as well as during diastole, thus offering an additional security to ensure not to impede at all the passage of blood from the aorta to the coronary ostia.

As another advantageous embodiment of the invention, the guiding means of the valvular structure are inclined strips from the base to the upper extremity of the valvular structure with regard to the central axis of the valvular structure. This inclination initiates and imparts a general helicoidal movement of the valvular structure around said central axis at the time of closure or opening of said structure, such a movement enabling to help initiate and finalize the closure of the valvular structure. In particular, this movement improves the collapse of the valvular structure towards its base at the time of diastole and during the reversal of flow at the very beginning of diastole. During diastole, the valvular structure thus fails down, folding on itself and collapses on its base, therefore closing the aortic orifice. The strips can be pleats, strengthening struts or thickened zones.

In other embodiments, said guiding means are rectilinear strips from the base to the upper extremity of the valvular structure. In this case, the guiding means can comprise pleats, struts or thickened zones. In a particular embodiment, the stiffened zones then created can be advantageously two main portions, trapezoidal in shape, formed symmetrically one to each other with regard to the central axis of the valvular structure, and two less rigid portions separating said two main portions to lead to a tight closeness in shape of a closed slot at the time of closure of the upper extremities of the main portions of the valvular structure. The thickened zones can be extended up to form the stiffened zones.

More particularly, each of said main slightly rigid portions occupy approximately one third of the circumference of the valvular structure when this latter is in its open position. The slightly rigid portions maintain the valvular structure closed during diastole by firmly applying themselves on each other.

The closure of the valvular structure at the time of diastole thus does not have any tendency to collapse too much towards the aortic annulus.

Preferably, the guiding means are a number of pleats formed within the tissue by folding, or formed by recesses or grooves made in the tissue. The shape of the pleats is adapted to achieve a global shape of the desired type for said position.

Alternatively, the guiding means are made of strengthening struts, preferably at least three, incorporated in the tissue in combination or not with said pleats.

The guiding means and, in particular, the strengthening struts, help to prevent the valvular tissue from collapsing back too much and to reverse inside the left ventricle through the base of the frame, preventing the risk of blood regurgitation.

In a preferred prosthetic valve of the invention, said valvular tissue is made of synthetic biocompatible material such as TEFLON® or DACRON®, polyethylene, polyamide. In various other preferred embodiments, the valve leaflets may be made of biological material, such as, for example, without limitation, from another human heart, a cow (bovine pericardium), a pig (porcine valve), a horse (equine pericardium) and the like. These materials are commonly used in cardiac surgery and are quite resistant, particularly to folding movements due to the increasing systolo-diastolic movements of the valvular tissue and particularly at the junction with the frame of the implantable valve.

The valvular structure is fastened along a substantial portion of an expandable frame, by sewing, by molding, by mechanical coupling, by friction fit, or by gluing to exhibit a tightness sufficiently hermetical to prevent any regurgitation of said body fluid between the frame and the valvular structure.

Preferably, an internal cover is coupled or is integral to the valvular structure and placed between said valvular structure and the internal wall of the frame to prevent any passage of the body fluid through said frame. Therefore, there is no regurgitation of blood as it would be the case if there were any space between the valvular structure fastened on the frame and the zone of application of the frame on the aortic annulus. The internal cover makes a sort of "sleeve" at least below the fastening of the valvular structure covering the internal surface of the frame and thus prevents any regurgitation of blood through the frame.

In the present invention, the frame is a substantially cylindrical structure capable of maintaining said body channel open in its expanded state and supporting said collapsible valvular structure.

In a preferred embodiment of the invention, the frame is made of a material which is distinguishable from biological tissue to be easily visible by non invasive imaging techniques.

Preferably, said frame is a stainless metal structure or a foldable plastic material, made of intercrossing, preferably with rounded and smooth linear bars. This frame is strong enough to resist the recoil phenomenon of the fibrous tissue of the diseased valve. The size of the bars and their number are determined to give both the maximal rigidity when said frame is expanded and the smallest volume when the frame is compressed.

More preferably, the frame has projecting curved extremities and presents a concave shape. This is aimed at reinforcing the embedding and the locking of the implantable valve in the distorted aortic orifice.

In a preferred embodiment of the present invention, the IV is made in two parts, a first reinforced frame coupled with a second frame which is made of thinner bars than said first frame and which is embedded inside the first frame. This second frame to which the valvular structure is fastened as described above, is preferably less bulky than the first frame to occupy as little space as possible and to be easily expanded using low pressure balloon inflation. In a variation of this embodiment, the second frame may be configured to be self-expanding such that the second frame expands within the first frame after being ejected from a sheath.

The present invention also relates to a double balloon catheter to separately position the first frame in the dilated stenosed aortic valve and place the second frame that comprises the valvular structure. This catheter comprises two balloons fixed on a catheter shaft and separated by few centimeters.

The first balloon is of the type sufficiently strong to avoid bursting even at a very high pressure inflation and is aimed at carrying, in its deflated state, a strong frame aimed at scaffolding the previously dilated stenosed aortic valve. The second balloon is aimed at carrying the second frame with the valvular structure.

An advantage of this double balloon catheter is that each balloon has an external diameter which is smaller than known balloons since each element to be expanded is smaller.

Moreover, such a double balloon catheter allows to enlarge the choice for making an efficient valvular structure enabling to overcome the following two contradictory conditions:

1) having a soft and mobile valvular structure capable of opening and closing freely in the blood stream, without risk of being damaged by balloon inflation; and

2) needing a very strong structure able to resist the recoil force of the stenosed valve and capable of resisting, without any damage, a strong pressure inflation of the expanding balloon.

Furthermore, the shaft of said double balloon catheter comprises two lumens for successive and separate inflation of each balloon. Of note, an additional lumen capable of allowing a rapid inflation takes additional room in the shaft.

The invention also relates to a method of using a two-balloon catheter with a first frame and second frame to which a valve prosthesis of the type previously described is fastened.

In another preferred embodiment of the present invention, the IV is made in two parts, a first frame configured to dilate a stenotic valve and a second frame on which the valvular structure is coupled. The first frame is preferably balloon expandable and is configured to substantially resist recoil forces of the native leaflets. The second frame is preferably smaller in diameter for deployment within the first frame. In this embodiment, the second frame is self-expanding such that the second frame radially expands within the first frame after being ejected from a sheath or otherwise released from a constriction mechanism. The second self-expanding frame may be shaped to securely seat itself within the first frame, thereby resisting migration.

The invention also relates to a method of delivering a first, balloon expandable frame to dilate the native valve and a second, self-expanding frame to provide a valvular structure, wherein the second, self-expanding frame is expanded within or adjacent to the first frame.

BRIEF DESCRIPTION OF THE DRAWINGS

The invention will now be explained and other advantages and features will appear with reference to the accompanying schematical drawings wherein:

FIGS. **1***a*, **1***b* and **1***c* illustrate, in section views, respectively, the normal aortic valve in systole, in diastole and a stenosed aortic valve;

FIGS. **2***a* and **2***b* illustrate two examples of a metallic frame which are combined to a valvular structure according to the present invention;

FIGS. **3***a* and **3***b* illustrate a frame according to the invention in its expanded position with an opening out of the extremities, respectively, with a cylindrical and a concave shape;

FIGS. **4***a* and **4***b* illustrate an IV of the invention respectively in its compressed position and in its expanded position in an open position as in systole;

FIGS. **5***a* and **5***b* illustrate respectively an IV of the invention in its closed position and a sectional view according to the central axis of such a valvular structure which is closed as in diastole;

FIGS. **6***a* to **6***d* illustrate a sectional view according to the central axis of an IV according to the present invention and showing the internal cover and the external cover of the valvular structure overlapping partially or non overlapping the frame bars;

FIG. **7** illustrates the frontal zig-zag fastening line of the valvular tissue on the frame;

FIGS. **8***a* and **8***b* illustrate, respectively, a perspective view of a valvular structure and an internal cover made all of one piece and a perspective view of the corresponding frame into which they will be inserted and fastened;

FIGS. **9***a* and **9***b* illustrate inclined strengthening struts, an example of a valvular structure according to the invention, respectively in the open position and in the closed position;

FIGS. **10***a* and **10***b* illustrate an example of a valvular structure comprising pleats, respectively in the open and in the closed position;

FIGS. **11***a* and **11***b* illustrate a valvular structure comprising two trapezoidal slightly rigid portions, respectively in the open and in the closed position;

FIGS. **11***c* to **11***e* illustrate a valvular structure comprising a rectangular stiffened zone, respectively in the open, intermediate and closed position;

FIGS. **12***a* and **12***b* illustrate, respectively, a perspective and cross sectional views of an implantable valve in its compressed presentation squeezed on a balloon catheter;

FIGS. **13***a* to **13***l* illustrate views of the successive procedure steps for the IV implantation in a stenosed aortic orifice;

FIG. **14** illustrates an implantable valve made in two parts in its compressed presentation squeezed on a two-balloon catheter with a reinforced frame on a first balloon and with the implantable valve on the second balloon;

FIGS. **15***a* to **15***f* illustrate the successive steps of the implantation of the implantation valve in two parts with a two-balloon catheter; and

FIGS. **16***a* to **16***d* illustrate a stenosed prosthetic aortic valve before and after, respectfully, implantation of an implantable valve according to another aspect of the present invention.

DETAILED DESCRIPTION OF THE PREFERRED EMBODIMENTS

In the diastole and systole illustrations of section views of FIGS. **1***a* and **1***b*, the arrows A indicates the general direction of the blood flow. The semi-lunar leaflets **1** and **2** of a native aortic valve (with only two out of three shown here) are thin, supple and move easily from the completely open position (systole) to the closed position (diastole). The leaflets originate from an aortic annulus **2***a*.

The leaflets **1'** and **2'** of a stenosed valve as illustrated in FIG. **1***c*, are thickened, distorted, calcified and more or less fused, leaving only a small hole or a narrow slit **3**, which makes the ejection of blood from the left ventricle cavity **4** into the aorta **5** difficult and limited. FIGS. **1***a* to **1***c* show also the coronary artery ostium **6***a* and **6***b* and FIG. **1** a shows, in particular, the mitral valve **7** of the left ventricle cavity **4**.

An implantable valve according to the invention essentially comprises a supple valvular structure supported by a strong frame. The positioning of the implantable valve is an important point since the expanded frame has to be positioned exactly at the level of the native valvular leaflets **1**, **2** of the native valve, the structures of which are pushed aside by the inflated balloon.

Ideally, the implantable valve is positioned with the fastening line of the valvular structure on the frame exactly on the remains of the crushed stenosed valve to prevent any regurgitation of blood. In practice, it is difficult to position the implantable valve within less than 2 or 3 mm. However, any risk of regurgitation of blood is eliminated with the presence of an internal cover, as will be described below.

The upper limit of the frame should be placed below the opening of the coronary arteries, i.e., the coronary ostia **6**, or at their level so that the frame does not impede free blood flow in the coronary arteries. This point is a delicate part of positioning an IV since the distance between the superior limit of the leaflets of the natural valve and the coronary ostia **6** is only about 5 to 6 mm. However, the ostia are located in the Valsalva sinus **8** which constitutes a hollow that are located a little out of the way. This helps to prevent from impeding the coronary blood flow by the IV.

At the time of implantation, the operator evaluates the exact positioning of the coronary ostia by looking at the image produced by a sub-valvular angiogram with contrast injection performed before the implantation procedure. This image will be fixed in the same projection on a satellite TV screen and will permit the evaluation of the level of the origin of the right and left coronary arteries. Possibly, in case the ostia are not clearly seen by sub-valvular angiography, a thin guide wire, as those used in coronary angioplasty, is positioned in each of the coronary arteries to serve as a marker of the coronary ostia.

The lower part of the frame of the IV preferably extends by 2 or 3 mm inside the left ventricle **4**, below the aortic annulus **2***a*. However, this part of the frame should not reach the insertion of the septal leaflet of the mitral valve **7**, so that it does not interfere with its movements, particularly during diastole.

FIGS. **2***a* and **2***b* show respectively an example of a cylindrical frame or stent **10** comprising intercrossing linear bars **11**, with two intersections I by bar **11**, the bars **11** being soldered or provided from a folded wire to constitute the frame, with for instance a 20 mm, 15 mm or 12 mm height, and an example with only one intersection of bars **11**. Preferably, such a frame is expandable from a size of about 4 to 5 millimeters to a size of about 20 to 25 mm in diameter, or even to about 30-35 mm (or more) in particular cases, for instance for the mitral valve. Moreover, said frame, in its fully expanded state, has a height of approximately between 10 and 15 mm, and in its fully compressed frame, a height of approximately 20 mm. The number and the size of the bars are adapted to be sufficiently strong and rigid when the frame is fully open in the aortic orifice to resist the strong recoil force exerted by the distorted stenosed aortic orifice after deflation of the balloon used in the catheterization technique which has been previously maximally inflated to enlarge the stenosed valve orifice.

The frame may have several configurations according to the number of bars **11** and intersections. This number, as well as the size and the strength of the bars **11**, are calculated

taking into account all the requirements described, i.e., a small size in its compressed form, its capacity to be enlarged up to at least 20 mm in diameter and being strong when positioned in the aortic orifice to be able to be forcefully embedded in the remains of the diseased aortic valve and to resist the recoil force of the aortic annulus. The diameter of the bars is chosen, for instance, in the range of 0.1-0.6 mm.

A frame particularly advantageous presents, when deployed in its expanded state, an opening out **12** at both extremities as shown in FIGS. **3***a* and **3***b*, the frame having a linear profile (FIG. **3***a*) or a concave shape profile (FIG. **3***b*). This is aimed at reinforcing the embedding of the IV in the aortic orifice. However, the free extremities of the openings **12** are rounded and very smooth to avoid any traumatism of the aorta or of the myocardium.

The structure of a preferred frame used in the present invention both maintains the aortic orifice fully open once dilated and produces a support for the valvular structure. The frame is also foldable. When folded by compression, the diameter of said frame is about 4 to 5 millimeters, in view of its transcutaneous introduction in the femoral artery through an arterial sheath of 14 to 16 F (F means French, a unit usually used in cardiology field) i.e., about 4.5 to 5.1 mm. Also, as described below, when positioned in the aortic orifice, the frame is able to expand under the force of an inflated balloon up to a size of 20 to 23 mm in diameter.

The frame is preferably a metallic frame, preferably made of steel. It constitutes a frame with a grate type design able to support the valvular structure and to behave as a strong scaffold for the open stenosed aortic orifice. In alternative embodiments, the frame may be provided with anchoring members of the type known in the art, such as hooks or barbs, to further enhance fixation of the frame at the treatment site. In one variation, the anchoring members may be configured to be pushed radially outward (e.g., by the balloon) during expansion of the implantable valve, thereby causing the anchoring members to penetrate the native tissue.

When the frame is fully expanded, its intercrossing bars push against the remains of the native stenosed valve that has been crushed aside against the aortic annulus by the inflated balloon. This produces a penetration and embeds the bars within the remains of the stenosed valve, in particular owing to a concave profile of the frame provided with an opening out, as illustrated in FIG. **3***b*. This embedding of the frame on the aortic annulus, or more precisely on the remains of the crushed distorted aortic valve, will be determinant for the strong fixation of the IV in the right position, without any risk of displacement. Alternatively, if a frame having a concave profile is provided with sufficient height, the central portion of the frame may be deployed along the aortic annulus while the upper and lower portions (having larger diameters) extend into the Valsalva sinus and left ventricle, respectively, thereby conforming to the shape of the aortic annulus and resisting migration without substantial penetration of the stenosed valve. In one variation, a concave shaped balloon may be used to assist in the deployment of a frame having a concave profile.

Moreover, the fact that the valve leaflets in degenerative aortic stenosis are grossly distorted and calcified, sometimes leaving only a small hole or a small slit in the middle of the orifice, has to be considered an advantage for the implantation of the valve and for its stable positioning without risk of later mobilization. The fibrous and calcified structure of the distorted valve provides a strong base for the frame of the IV and the powerful recoil phenomenon that results from elasticity of the tissues contribute to the fixation of the metallic frame.

The height of the fully expanded frame of the illustrated frames **10** is preferably between 10 and 15 mm. Indeed, since the passage from the compressed state to the expanded state results in a shortening of the metallic structure, the structure in its compressed form is a little longer, i.e., preferably about 20 mm length. This does not constitute a drawback for its transcutaneous introduction and its positioning in the aortic orifice.

As mentioned above, the frame is strong enough to be able to oppose the powerful recoil force of the distended valve and of the aortic annulus **2***a*. Preferably it does not possess any flexible properties. When the frame has reached its maximal expanded shape under the push of a forcefully inflated balloon, it remains substantially without any decrease in size and without any change of shape. The size of the bars that are the basic elements of the frame is calculated in such a way to provide a substantial rigidity when the frame is fully expanded. The size of the bars and their number are calculated to give both maximal rigidity when expanded and the smallest volume when the metallic frame is its compressed position.

At the time of making the IV, the frame is expanded by dilatation to its broadest dimension, i.e., between 20 mm and 25 mm in diameter, so as to be able to fasten the valvular structure on the inside side of its surface. This fastening is performed using the techniques in current use for the making of products such as other prosthetic heart valves or multipolars catheters etc. Afterwards, it is compressed in its minimal size, i.e., 4 or 5 mm, in diameter in view of its introduction in the femoral artery. At time of the IV positioning, the frame is expanded again by balloon inflation to its maximal size in the aortic orifice.

If the frame is built in an expanded position, it will be compressed, after fastening the valvular structure, by exerting a circular force on its periphery and/or on its total height until obtaining the smallest compressed position. If the frame is built in its compressed position, it will be first dilated, for instance, by inflation of a balloon and then compressed again as described above. By manufacturing the frame in the expanded condition and fastening the valvular structure to the expanded frame, it is only necessary for the frame to be expanded once (i.e., during deployment at treatment site). This method of manufacture advantageously reduces fatigue and improves the durability of the IV.

To help localizing the IV, the frame being the only visible component of the valve, the shaft of the balloon catheter on which will be mounted the IV before introduction in the body (see below) possesses preferentially metallic reference marks easily seen on fluoroscopy. One mark will be at level of the upper border of the frame and the other at the level of the lower border. The IV, when mounted on the catheter shaft and crimped on it, is exactly positioned taking into account these reference marks on the shaft.

Accordingly, the frame is visible during fluoroscopy when introduced in the patient's body. When the frame is positioned at the level of the aortic annulus, the upper border of the frame is placed below the coronary ostia. Furthermore, the implanting process during which the balloon inflation completely obstructs the aortic orifice, as seen below, is performed within a very short time, i.e., around 10 to 15 seconds. This also explains why the frame is clearly and easily seen, without spending time to localize it. More particularly, its upper and lower borders are clearly delineated.

FIGS. **4***a* and **4***b* show an example of a preferred IV **13** of the present invention, respectively in its compressed position, in view of its introduction and positioning in the aortic orifice, and in its expanded and opened (systole) position. FIGS. **5***a* and **5***b* show the expanded position of this example closed in

diastole, respectively in perspective and in a crossed section view along the central axis XX of the valve prosthesis.

The valvular structure **14** is compressed inside the frame **10** when this is in its compressed position (FIG. **4***a*), i.e., it fits into a 4 to 5 mm diameter space. On the other hand, the valvular structure can expand (FIG. **4***b*) and follow the frame expansion produced by the inflated balloon. It will have to be able to reach the size of the inside of the fully deployed frame.

The illustrated IV **13** is made of a combination of two main parts:

1) the expandable but substantially rigid structure made of the frame **10**, a metallic frame in the example; and

2) a soft and mobile tissue constituting the valvular structure **14** exhibiting a continuous surface truncated between a base **15** and an upper extremity **16**; the tissue is fastened to the bars **11** of the frame at its base **16** and is able to open in systole and to close in diastole at its extremity **16**, as the blood flows in a pulsatile way from the left ventricle towards the aorta.

The tissue has rectilinear struts **17** incorporated in it in plane including the central axis XX, in order to strengthen it, in particular, in its closed state with a minimal occupation of the space, and to induce a patterned movement between its open and closed state. Other examples of strengthening struts are described below. They are formed from thicker zones of the tissue or from strips of stiffening material incorporated in the tissue; they can also be glued or soldered on the valvular tissue.

These strengthening struts help to prevent the valvular tissue from collapsing back too much and to evert inside the left ventricle through the base of the frame. These reinforcements of the valvular tissue help maintain the folded tissue above the level of the orifice during diastole, prevent too much folding back and risk of inversion of the valvular structure inside the left ventricle. By also preventing too much folding, a decrease of the risk of thrombi formation can also be expected by reducing the number of folds.

The truncated shape forming a continuous surface enables to obtain a strong structure and is more efficient for the systolo-diastolic movements of the valvular tissue during heart beats. The truncoidal shape facilitates the closure of the valve structure at the beginning of diastole in facilitating the start of the reverse movement of the valvular tissue towards its base at the time of diastole, i.e., at the time of flow reversal at the very beginning of diastole. During diastole, the valvular structure **14** thus fails down, folding on itself, thereby collapsing on its base, and therefore closing the aortic orifice. In fact, the valvular structure has preferably, as illustrated, an hyperboloid shape, with a curvature on its surface concave towards the aortic wall that will contribute to initiating its closure.

Moreover, the basis of the truncated hyperboloid is fixed on the lower part of a frame and the smallest extremity of the truncated hyperboloid is free in the blood stream, during the respected closing and opening phasis.

An important advantage of this hyperboloidal shape is that the upper extremity **16** of the valvular structure **14** can remain at a distance from the coronary ostia during systole as well as during diastole, because of its smaller diameter, thus offering an additional security to make certain that the passage of blood from aorta to the coronary ostia is not impeded.

The base **15** of the truncated tissue is attached on the frame **10** along a line of coupling **18** disposed between the inferior fourth and the third fourth of the frame in the example. The upper extremity **16**, with the smaller diameter, overpasses the upper part of the frame by a few millimeters; 6 to 8 mm, for instance. This gives the valvular structure a total height of about 12 to 15 mm.

The upper extremity **16** of the truncated tissue, i.e., the smaller diameter of the hyperboloidal structure **14**, is about 17 to 18 mm in diameter (producing a 2.3 to 2.5 cm^2 area opening) for a 20 mm diameter base of the truncated structure, or 19 to 20 mm in diameter (producing a 2.8 or a 3 cm^2 area opening) for a 23 mm diameter base. An opening area around 2 cm^2 or slightly above, gives satisfactory results, particularly in elderly patients who would not reasonably need to exert high cardiac output.

For instance, in the present example, the line of fastening of the base of the truncated tissue on the frame will have to expand from a 12.5 mm perimeter (for a 4 mm external diameter of the compressed IV) to a 63 mm perimeter (for a 20 mm external diameter of the expanded IV), or to a 72 mm perimeter (for a 23 mm external diameter, in case a 23 mm balloon is used).

Another advantage of this truncated continuous shape is that it is stronger and has less risk of being destroyed or distorted by the forceful balloon inflation at the time of IV deployment. Also, if the truncated hyperboloidal shape is marked, for instance, with a 16 or 17 mm diameter of the upper extremity as compared to a 20 mm diameter of the base (or 18 to 20 mm for 23 mm), the smaller upper part is compliant during balloon inflation in order to enable the balloon to expand cylindrically to its maximal mm diameter (or 23 mm). This is made possible by using a material with some elastic or compliant properties.

The valvular structure of the invention, as shown in the illustrated example, includes advantageously a third part, i.e., the internal cover **19** to be fixed on the internal wall of the frame **10**. This internal cover prevents any passage of blood through the spaces between the bars **11** of the frame in case the implantable valve would be positioned with the fastening line of the valvular structure on the frame not exactly on the remains of the dilated aortic valve, i.e., either above or below. It also strengthens the fastening of the valvular structure **14** to the frame **10**.

In the different sectional views of the different examples of IV according to the invention, as illustrated at FIGS. **6***a* to **6***c*, the internal cover **19** covers the totality of the internal side of the frame **10** (FIG. **6***a*), only the lower part of the frame **10** (FIG. **6***b*), or it can additionally cover partially 3 to 5 mm as shown in the passage of blood from aorta to the coronary ostia FIG. **6***c*, the upper part defined above the coupling line **18** of the valvular structure.

For instance, such an extension of the internal cover **19** above the fastening line **18** of the valvular structure will give another security to avoid any risk of regurgitation through the spaces between the bars **11** in case the IV would be positioned too low with respect to the border of the native aortic valve.

The internal cover can also be molded to the valvular structure or casted to it which therefore constitutes an integral structure. The valvular structure and the internal cover are therefore strongly locked together with minimum risk of detachment of the valvular structure which is unceasingly in motion during systole and diastole. In that case, only the internal cover has to be fastened on the internal surface of the frame which renders the making of the IV easier and makes the complete device stronger and more resistant. In particular, the junction of the mobile part of the valvular structure and the fixed part being molded as one piece is stronger and capable to face the increasing movements during the systolo-diastolic displacements without any risk of detachment.

The presence of the internal cover makes an additional layer of plastic material that occupies the inside of the frame and increases the final size of the IV. Therefore, in the case in which the internal cover is limited to the inferior part of the

frame (that is, below the fastening line of the valvular structure), it does not occupy any additional space inside the frame. Here also, it is more convenient and safer to make the valvular structure and this limited internal cover in one piece.

In other aspects, to prevent any regurgitation of blood from the aorta towards the left ventricle during diastole, the base of the valvular structure is preferably positioned exactly at the level of the aortic annulus against the remains of distorted stenosed valve pushed apart by the inflated balloon. Therefore, there is no possibility of blood passage through the spaces between the metallic frame bars **11** below the attachment of the valvular structure.

However, to avoid any risk of leaks, the part of the frame below the fastening of the valvular structure (about 3 to 5 mm) is preferably covered by an internal cover which is preferably made with the same tissue as the valvular structure. Thus, there would be no regurgitation of blood which is a possibility when there is any space between the valvular structure fastened on the metallic frame and the line of application of the frame on the aortic annulus. The internal cover makes a sort of "sleeve" below the fastening of the valvular structure on the internal surface of the frame, covering the spaces between the frame bars of the frame at this level, thus preventing any regurgitation of blood through these spaces.

The internal cover can also have another function, i.e., it can be used to fasten the valvular structure inside the frame, as described below.

At FIG. **6***d*, the internal cover **19** is extended at its lower end **19'** to an external cover **19'** which is rolled up to be applied on the external wall of the stent **10**. The internal and external cover are molded, glued or soldered to the bars of the stent **10**.

The coupling process of the valvular structure on the frame is of importance since it has to be very strong without any risk of detachment of the valvular structure from the frame during millions of heart beats with pulsatile blood flow alternatively opening and closing the valvular structure.

The valvular structure of the invention folds to a very small size inside the frame in the compressed position of the valve and is expandable up to 20 to 23 mm diameter. Also, the valvular structure can resist the strong force exerted by the maximally inflated balloon that will powerfully squeeze it against the bars of the frame or against the internal cover, this one being squeezed directly against the bars of the frame. The junction zone is also particularly subjected to very strong pressure exerted by the inflated balloon. Furthermore, this junction zone must not tear or break off during expansion of the balloon. At this time, each part of the junction zone is squeezed against the bars but nonetheless follows the expansion of the frame.

As shown in FIG. **7**, the junction zone is, for example, a fastening line **20** which follows the design of a "zig-zag" line drawn by the intercrossing bars **11** of the frame on the internal cover **19**.

The fastening of the valvular structure to the frame can be made by sewing the internal and/or the external cover to the bars. To prevent any leakage of blood, stitches are preferably numerous and very close to each other, either as separated stitches or as a continuous suture line. Also, the stitches are made directly around the bars **11**. Furthermore, since the valvular structure is expanded together with the metallic frame, the stitches, if made as a continuous suture line, are also able to expand at the same time.

The fastening process can also be made by molding the base of the valvular structure on the frame. At this level, the bars **11** are imbedded in the coupling line of the valvular structure **14**. This mold way also concerns the internal cover **19**, when it goes below the coupling line **14** on the frame over few millimeters, for example, 2 to 4 mm. As mentioned above, this is intended in order to prevent any regurgitation of blood just below the lower part of the valvular structure **14** in case the frame **10** would not be exactly positioned on the aortic annulus but at few millimeters away.

The fastening process can further be made by gluing or soldering the valvular structure on the bars with sufficiently powerful biocompatible glues. The same remark can be made concerning the internal cover of the frame below the coupling line of the valvular structure.

Also, this allows the coupling line to follow the frame changes from the compressed position to its expanded one.

The fastening process can also be made by mechanically coupling the valvular structure to the frame. For example, the valvular structure may be attached using rivets, pins, screws or any other fastener suited for this purpose. In one variation, the mechanical coupling mechanism may be configured to be releasable for removing the valvular structure from the frame after deployment. This variation may be particularly advantageous for replacing a stenotic, worn or fatigued valvular structure, as will be described in more detail below.

The valvular structure can also be fastened on the internal cover previously fixed at the total length of the internal surface of the metallic frame. The internal cover constitutes therefore a surface on which any type of valvular structure be more easily sewed, molded or glued. Because it is a structure with a large surface and is not involved in the movements of the valvular tissue during systole and diastole, the internal cover is more easily fastened to the internal surface of the frame.

In the particular embodiment shown in FIGS. **8***a* and **8***b*, the internal cover **19** is fastened, after introduction (indicated by the arrow B), at the upper and lower extremities of the frame **10** on the upper and lower zig-zag lines of the intercrossing bars **11**. In fact, the fastening of the internal cover **19** on the zig-zag lines made by the intercrossing bars **11** of the frame allows an easier passage of blood from the aorta above the IV towards the coronary ostia. Indeed, the blood can find more space to flow into the coronary ostia by passing through the lowest point of each triangular space made by two intercrossing bars **11**, as indicated by the arrows A**1** (see also FIG. **1***b*).

The fastening of the internal cover **19** on the extremities can be reinforced by various points of attachment on various parts of the internal surface of the frame **10**. The internal cover **19** can be fastened by sewing, molding or gluing the bars **11** onto the frame.

Fastening the valvular tissue (and the cover tissue below) on the inside of the frame, requires work on the frame in its expanded position to have access to the inside of this cylindric frame. In a preferred embodiment the frame is expanded a first time for fastening the valvular tissue on its bars, then compressed back to a smaller size to be able to be introduced via arterial introducer and finally expanded again by the balloon inflation.

Since it is aimed at being positioned in the heart after having been introduced by a catheterization technique by a transcutaneous route in a peripheral artery, mainly the femoral artery, the IV should preferably have the smallest possible external diameter. Ideally, it should be able to be introduced in the femoral artery through a 14 F (4.5 mm) size arterial introducer which is the size of the arterial introducer commonly used to perform an aortic dilatation. However, a 16 F (5.1 mm) or even a 18 F (5.7 mm) introducer would also be acceptable.

Above this size, the introduction of the IV in the femoral artery should probably be done by a surgical technique. This

is still quite acceptable since the surgical procedure would be a very light procedure which could be done by a surgeon with a simple local anaesthesia. It has to be recalled that this technique is used to position big metallic frames, about 24 F in size (7.64 mm in diameter), in the abdominal aorta for the treatment of aneurysms of the abdominal aorta. In that situation, this necessitates surgical repair of the artery after withdrawal of the sheath (M. D. Dake, New Engl.J.Med. 1994; 331:1729-34).

Ideally, an IV should be able to last several tenths of life years without defect, like the mechanical prosthetic valves which are currently implanted by the surgeons. Nevertheless, an implantable valve that would last at least ten years without risk of deterioration would be effective for the treatment of elderly patients.

A valvular structure according to the invention is made of a supple and reinforced tissue which has a thickness to be thin enough to occupy as less as possible space in the compressed form of the valve, is pliable, and also strong enough to stand the unceasing movements under the blood pressure changes during heart beats. The valvular structure is capable of moving from its closed position to its open position under the action of the force exerted by the movements of the blood during systole and diastole, without having any significant resistance to blood displacements.

The material used for the tissue, which exhibits the above mentioned requirements, may be TEFLON® or DACRON®, which are quite resistant to folding movements, at least when they are used to repair cardiac defects such as inter-atrial or interventricular defects or when they are used to repair a valve such as the mitral valve which is subjected to high pressure changes and movements during heart beats. Also, a main point is the increasing systolo-diastolic movements of the valvular tissue, particularly at its junction with the rigid part of the IV, and it is therefore necessary to find the most possible resistant material tissue.

As mentioned previously, the valvular structure can also possibly be made with biological tissue such as the pericardium (e.g., bovine or equine), or with porcine leaflets, which are commonly used in bioprosthetic surgically implanted valves.

Moreover, the valvular prosthesis of the present invention does not induce any significant thrombosis phenomenon during its stay in the blood flow and is biologically neutral.

To prevent the risk of thrombus formation and of emboli caused by clots, a substance with anti-thrombic properties could be used, such as heparine, ticlopidine, phosphorylcholine, etc., either as a coating material or it can be incorporated into the material used for the implantable valve, in particular, for the valvular structure and/or for the internal cover.

The valvular structure of the invention can have several types of designs and shapes. Besides the example illustrated in FIGS. **4** and **5**, examples of strengthened valvular structures according to the invention are shown in FIGS. **9** to **11**, respectively in the closed (FIGS. **9***a*, **10***a*, **11***a*) and in the open state (FIGS. **9***b*, **10***b*, **11***b*) to form a prosthetic valve according to the present invention. In those figures, the frame line is simplified to clarify the drawings.

To help initiate and finalize the closure of the valvular structure, four strengthening struts **14***a* are slightly inclined from the base to the upper part as compared to the central axis XX of the structure, as shown in FIGS. **9***a* and **9***b*. Accordingly, a patterned movement of the valvular structure, during the closing and the opening phases, is initiated. This patterned movement is, in the present case, an helicoidal-type one, as suggested in FIGS. **9***b* and **10***b* by the circular arrow **21**.

FIGS. **10***a* and **10***b* illustrate another embodiment to help the closing of the valvular structure and which also involves an helicoidal movement. Represented by lines **22**, inclined pleats are formed in the tissue to impart such a movement. As illustrated, these lines have an inclination from the base to the upper part of the valvular structure tissue **14**. Pleats are formed by folding the tissue or by alternating thinner and thicker portions. The width and the number of those pleats are variable, and depend particularly on the type of material used. According to another example, these pleats **22** are combined with the above described inclined strengthening struts.

These reinforcing pleats and/or struts, rectilinear or inclined, have the advantage to impart a reproducible movement and, accordingly, to avoid the valvular structure from closing to a nonstructurized collapse on the frame base.

Another shape of the valvular structure comprises two portions: one portion being flexible but with some rigidity, having a rectangular shape, occupying about one third of the circumference of the valvular structure, and the other portion being more supple, flexible and foldable occupying the rest of the circumference at its base as well as at its upper, free border. According to FIG. **11***c*, this valve is opened, during the ejection of blood, i.e., during systol. In FIG. **1***d*, a front view of the valve is closed, during an intermediate diastole, and in FIG. **1***e* the same closed valve during diastole is shown from a side view. The semi-rigid part **24'** moves little during systole and during diastole. The foldable part **23'** moves away from the rigid part during systole to let the blood flow through the orifice thus made. This orifice, due to the diameter of the upper part which is the same as that of the open stent, is large, generally as large as that of the open stent. At the time of diastole, due to the reverse of pressure, the foldable part moves back towards the semi-rigid part and presses on it, and thus closes the orifice and prevents any regurgitation of blood.

The advantage of such a valve design is to allow a large opening of the upper part of the valvular structure, not only to permit more blood flow at time of systole after the valve has been implanted, but also at the very time of implantation, when the balloon is maximally inflated to expand the valve to imbed it in the valvular annulus. The diameter of the upper part of the valvular structure could be the same size as the balloon, so that there would be no distension of the valvular part of the valve at the time of implantation, and therefore no risk of deterioration of the valvular structure by the inflated balloon.

The foldable part of the valve could be reinforced by strengthening struts to prevent an eversion of the valve towards the left ventricle during diastole.

Another shape of the valvular structure, as illustrated in FIGS. **11***a* and **11***b* comprise four portions, alternatively a main portion **23** and a more narrow portion **24**. The main and the narrow portions are facing each other. Each portion has an isosceles trapezoidal shape. The main portions **23** are flexible but with some slight rigidity and the more narrow portions **24** are compliant, more supple and foldable. In this type of design, the two slightly rigid main portions **23** maintain the valvular structure closed during diastole by firmly applying on each other in their upper extremities, thus forming a slot-like closure **25**. This particular embodiment needs less foldable tissue than in the previous embodiments and the closure of the valvular structure at the time of early diastole does not have any tendency to collapse towards the aortic annulus.

Another design for the valvular structure is a combination of a cylindrical shape followed by a truncated shape.

This type of valvular structure is longer that the hyperboloidal type, for instance, 25 or 30 mm long, therefore exceeding out of the upper part of the metallic frame, by 10 to 20 mm.

The cylindrical part corresponds to the 10 metallic frame and remains inside it. The truncated conic shape is the upper part of the valvular structure, totally exceeding out of the upper extremity of the metallic frame. An advantage of such a design is that the balloon can be inflated only in the cylindrical part of the valvular structure, therefore without risk of stretching the truncated conical part of the upper diameter which is smaller than that of the inflated balloon.

When the upper extremity of the cylindrical part has the same size as the lower extremity, there is no difference during balloon inflation in the degree of force exerted by the balloon on the lower and on the upper extremity of the valvular structure. Preferably, rectilinear reinforcing struts are used in this embodiment, to strengthen the valve structure and aid in its shutting without collapsing and inverting inside the left ventricle through the aortic annulus under the force of the diastolic pressure.

Two different processes for implanting a valve according to the present invention are shown respectively in FIGS. **13***a* to **13***l* with a unique balloon catheter, as illustrated in FIGS. **12***a* and **12***b* and in FIGS. **15***a* to **15***f*, with a two-balloon catheter, as illustrated in FIG. **14**.

The IV positioning in the aortic orifice and its expansion can be performed with the help of a unique substantially cylindrical balloon catheter **26** in the so-called unique-balloon catheterization technique.

Preparing for its introduction by transcutaneous route in the femoral artery, the IV **13** is, as illustrated in the perspective view of FIG. **10***a* in a compressed form crimpled on the balloon catheter **26**. A central sectional view of the mounted IV **13** on the complete balloon catheter **26** is shown in FIG. **12***b*.

The shaft **27***f* of the balloon dilatation catheter **26** is as small as possible, i.e., a 7F (2.2 mm) or a 6 F (1.9 mm) size. The balloon **26** is mounted on the shaft **27** between two rings R. Moreover, the shaft **27** comprises a lumen **28** (FIG. **12***b*) as large as possible for inflation of the balloon **26** with diluted contrast to allow simple and fast inflation and deflation. It has also another lumen **29** able to accept a stiff guide wire **30**, for example 0.036 to 0.038 inches (0.97 mm), to help position the implantable valve with precision.

The balloon **26** has, for example, a 3 to 4 cm length in its cylindrical part and the smallest possible size when completely deflated so that it will be able to be placed inside the folded valve having an outside diameter which ranges between about 4 and 5 mm. Therefore, the folded balloon preferably has at the most a section diameter of about 2.5 to 3 mm.

The balloon is therefore made of a very thin plastic material. It is inflated with saline containing a small amount of contrast dye in such a way to remain very fluid and visible when using X-ray.

However, the balloon **26** has to be sufficiently strong to resist the high pressure that it has to withstand to be capable of expanding the folded valvular structure **14** and the compressed frame in the stenosed aortic orifice considering that, although pre-dilated, the aortic orifice still exerts a quite strong resistance to expansion because of the recoil phenomenon.

This procedure is shown in FIGS. **13***a* to **13***e*.

In contrast to the technique used when performing the usual aortic dilatation (without valve implantation), i.e., inflating the balloon maximally markedly above the nominal pressure, if possible, up to the bursting point (which occurs always with a longitudinal tear, without deleterious consequence, and with the advantage of both exerting a maximal dilating force and restoring blood ejection instantaneously), the balloon inflated for expansion of an implantable valve should not burst in any case. Indeed, bursting of the balloon would involve a risk of incomplete valve expansion and wrong positioning. Therefore, the balloon should be very resistant to a very high pressure inflation. Furthermore, the balloon is inflated only up to the nominal pressure indicated by the maker and the pressure is controlled during inflation by using a manometer. Such relatively low pressure should be sufficient since prior to positioning the IV, an efficacious dilatation of the stenosed aortic valve according to the usual technique with a maximally inflated balloon for example 20 mm or 25 mm in size in such a way to soften the distorted valvular tissue and facilitate the enlargement of the opening of the valve at time of IV implantation is performed.

The implantation of the aortic valve **20** can be made in two steps, as described as follows.

The first step, as shown in FIGS. **13***a* to **13***f*, consists of introducing the shaft **27** and balloon catheter **26** along the guide wire previously positioned in the ventricle **4** (FIGS. **13***a*-**13***b*). The dilatation of the stenosed aortic valve **1'**, **2'** using a regular balloon catheter, according to the commonly performed procedure, i.e., with the guide wire **30** introduced in the ventricle **4** (FIG. **13***a*) and with maximal inflation of the balloon **26** (FIGS. **13***c* to **13***d*) up to the bursting point. Dilatation is performed at least with a balloon having about 20 mm diameter, but it can be performed with a balloon having about 23 mm diameter so as to increase maximally the aortic orifice opening before implantation of the valve although the implantable valve is about 20 mm in diameter. This preliminary dilatation of the aortic orifice helps in limiting the force required to inflate the balloon used to expand the implantable valve and position it in the aortic orifice, and also in limiting the recoil of the aortic valve that occurs immediately after balloon deflation. The balloon is deflated (FIG. **13***a*) and pulled back on the wire guide **30** left inside the ventricle.

Owing to the marked recoil of the stenosed valve and also of the strong aortic annulus, the 20 mm diameter valve is forcefully maintained against the valvular remains at the level of the aortic annulus. Preliminary dilatation has another advantage in that it permits an easier expansion of the IV, having a lower pressure balloon inflation which helps prevent damage of the valvular structure of the IV. This also facilitates the accurate positioning of the prosthetic valve.

The second step corresponds to the implantation of the valve **13** is shown in FIGS. **13***g* to **13***l*. The positioning of the IV needs to be precise at a near 2 or 3 mm, since the coronary ostia **6** has to remain absolutely free of any obstruction by the valve **13** (FIGS. **13***k* and **13***l*). As mentioned above, this is, for example, performed with the help of the image of the subvalvular angiogram in the same projection fixed on an adjacent TV screen. The expansion and the positioning of the valve prosthesis **13** is performed within a few seconds (15 to 20 among at most) since during the maximal balloon inflation (which has to be maintained only a very few seconds, **3**, **4**,) the aortic orifice is obstructed by the inflated balloon **31** and the cardiac output is zero (FIG. **13***h*). As for the pre-dilatation act itself, the balloon **26** is immediately deflated within less than **5** or **6** seconds (FIG. **13***j*) and, as soon as the deflation has clearly begun, the closing and opening states of the IV are active whereas the balloon is pulled back briskly in the aorta (FIGS. **13***j* to **13***l*). In case the IV is not maximally expanded by the first inflation, it is possible to replace the balloon inside the IV and to reinflate it so as to reinforce the expansion of the IV. In one variation to the second step, the valve **13** may be expanded to a diameter greater than the aortic annulus, thereby compressing the native leaflets and/or stretching the aortic annulus during deployment. This variation enhances

the fixation of the valve within the annulus. Over-expansion of the valve also decreases residual gaps between the annulus and the outer wall of the valve, thereby reducing or eliminating undesirable leakage around the perimeter of the valve. Still further, over-expansion advantageously allows for the use of a valve with a larger flow area.

The IV **13** can also be used in aortic regurgitation. This concerns more often younger patients rather than those with aortic stenosis. The contraindication to surgical valve replacement is often not due to the old age of the patients, but stems mainly from particular cases where the general status of the patient is too weak to allow surgery, or because of associated pathological conditions. Apart from the fact that there is no need for a preliminary dilatation, the procedure of the valve implantation remains approximately the same. The balloon inflation inside the IV is chosen accordingly, taking also into account the fact that it is necessary to overdilate the aortic annulus to obtain a recoil phenomenon of the annulus after balloon deflation to help maintain the IV in position without any risk of displacement.

However, the size of the expanded implantable valve is around 25 to 30 mm in diameter, or even bigger, because the aortic annulus is usually enlarged. A preliminary measurement of the annulus will have to be performed on the subvalvular angiography and by echocardiography to determine the optimal size to choose.

The IV can be used in the mitral position, mainly in case of mitral regurgitation, but also in case of mitral stenosis. Here again, the IV **20** is only described when used only in cases of contraindication to surgical valve repair or replacement. The procedure is based on the same general principles though the route for the valve positioning is different, using the transseptal route, like the commonly performed mitral dilatation procedure in mitral stenosis. The IV size is quite larger than for the aortic localization (about 30 to 35 mm in diameter when expanded or clearly above in case of a large mitral annulus, a frequent occurrence in mitral insufficiency), to be capable of occupying the mitral area. A preliminary measurement of the mitral annulus is performed to determine the optimal implantable valve size to choose. Since the introduction of the IV is performed through a venous route, almost always through the femoral vein which is quite large and distensable, the bigger the size of the IV in its compressed position is not a drawback even if the diameter size is about 6 or 7 mm. Moreover, the problem of protection of the coronary ostia as encountered in the aortic position does not exist here which therefore makes the procedure easier to be performed.

Finally, the IV can be used to replace the tricuspid valve in patients with a tricuspid insufficiency. This procedure is simple to perform since the positioning of the IV is made by the venous route, using the shortest way to place in the right position at the level of the tricuspid orifice practically without any danger from clot migration during the procedure. A large implantable valve is used, with a diameter of about 40 mm or even larger because the tricuspid annulus is often markedly dilated in tricuspid insufficiency. Here also, as in the mitral position, the compressed IV and the catheter used can be without inconvenience, quite larger than that for the aortic position because of the venous route used.

Furthermore, it has to be noted that the IV can be used also as a first step in the treatment of patients who have contraindication to surgery, when they are examined for the first time, but who could improve later on after correction of the initial hemodynamic failure. The IV procedure can be used as a bridge towards surgery for patients in a weak general condition which are expected to improve within the following weeks or months after the IV procedure in such a way that they can be treated by open heart surgery later on. In the same vein, the IV procedure can be used as a bridge towards surgical valve replacement or repair in patients with a profoundly altered cardiac function that can improve secondarily owing to the hemodynamic improvement resulting from the correction of the initial valvular disease by the IV implantation.

Another technique for implantation of an aortic valve by transcutaneous catheterization uses a two-balloon catheter.

An example of this technique using the two parts IV with a two-balloon catheter **40** is shown in FIG. **14**.

Two-balloons **26** and **26'** are fixed on a unique catheter shaft **27**, said balloons being separated by a few millimeters. The two balloons are preferably short, i.e., about 2 to 2.5 cm long in their cylindrical part. The first balloon **26** to be used, carries a first frame **10** aimed at scaffolding the stenosed aortic orifice after initial dilatation. This first balloon **26** is positioned on the aorta side, above the second balloon **26'** which is positioned on the left ventricle side. The second balloon **26'** carries the expandable valve **13** which is of the type described above made of a second frame **10'** and a valvular structure **14** attached to said frame **10'**. The difference is that the second frame does not need to be as strong as the first frame and is easier to expand with low balloon pressure inflation which does not risk damaging the valvular structure **14**.

This enlarges the choice for making a valvular structure without having to face two contradictory conditions:

having a soft and mobile valvular structure **14** capable of opening and closing freely in the blood stream without risk of being damaged by a balloon inflation; and

needing a reinforced frame strong enough to be capable of resisting without any damage, a strong pressure inflation of the expanding balloon.

The shaft **27** of this successive two-balloon catheter **40** comprises two lumens for successive and separate inflation of each balloon. Indeed, an additional lumen capable of allowing a fast inflation occupies space in the shaft and therefore an enlargement of the shaft is necessary. However, this enlargement of the shaft stops at the level of the first balloon **26** since, further to said first balloon, only one lumen is necessary to inflate the second balloon **2**C, at the level of the IV which is the biggest part of the device.

Another advantage of this two part IV with a two-balloon catheter is that each set of implantable valve and balloon has a smaller external diameter since each element to be expanded, considered separately, is smaller than in combination. This allows obtaining more easily a final device with an external diameter 14F.

The first balloon is sufficiently strong to avoid bursting even at a very high pressure inflation. This first balloon is mounted in the frame in its deflated position, prior to its introduction by the strong frame which is aimed to scaffold the dilated stenosed aortic valve. The size and shape of said frame is comparable to what has been described previously but said frame is calculated (in particular the material, the number and diameter of its bars are chosen by the person skilled in the art) to make sure that it will resist the recoil of the dilated valve and that it will be securely embedded in the remains of the native aortic valve.

The second balloon does not need to be as strong as the first one and, therefore, can be thinner, occupying less space and being easier to expand with a lower pressure for balloon inflation. This second balloon **26'** is mounted in the valve itself which, as in the preceding description, comprises a frame to support the valvular structure and said valvular structure.

Also, the second frame **10'** does not need to be as strong as the first one. This frame can be slightly shorter, 10 mm instead of 12 mm, and its bars can be thinner. This frame can have an external surface which is a bit rough to allow better fixation on the first frame when expanded. The bars may also have some hooks to fasten to the first frame.

The valvular structure is attached on said second frame and expanded by relatively low pressure in the second balloon called hereafter the IV balloon. It does not need to be as strong as in the preceding case (IV in one part and unique balloon catheter technique) and, therefore, it occupies less space and has less risk to be damaged at the time of expansion.

This technique is shown in FIGS. **15***a* to **15***f*.

One of the problems relevant to the IV implantation procedure as described above, with the IV in one part, is the expansion at the same time by the same balloon inflation of both the frame and the valvular structure. Indeed, the frame is a solid element and the valvular structure is a relative weak one that could be damaged when squeezed by the inflated balloon.

Therefore, the valve implantation can be performed in two immediately successive steps. The first step (FIGS. **15***a*-**15***b*) corresponds to the expansion and the positioning of the first frame with the first balloon **26** wherein inflation is performed at a high pressure. The second step (FIGS. **15***d*-**15***e*) corresponds to the expansion and the positioning of the valvular structure **14** inside the frame **10'** using the second balloon **2**C. This second step follows the first one within a few seconds because, in the time interval between the two steps, there is a total aortic regurgitation towards the left ventricle which is an hemodynamic condition that cannot be maintained for more than a few heart beats, i.e., a few seconds, without inducing a massive pulmonary edema and a drop to zero of the cardiac output.

In another embodiment, the balloon catheter may be provided with one or more perfusion lumens such that some blood may be allowed to flow through the aortic annulus during expansion of the balloons. In this embodiment, entry and exit ports may be provided along the catheter at locations proximal and distal to the balloons.

In another embodiment, the first frame to be introduced comprises the valvular structure and the second frame being stronger than the first one to scaffold the previously dilated stenosed aortic valve.

The advantage of this two step procedure would be to allow expansion and positioning of the frame part **10'** of the expandable valve **13** using strong pressure inflation of the balloon **26'** without the risk of damaging the valvular structure **14** which, for its own expansion, would need only light pressure inflation.

The method is schematically detailed in FIGS. **15***a* to **15***f*. A previous dilatation of the stenosed aortic valve is performed as an initial step of the procedure to prepare the distorted valve to facilitate the following steps:

1/ positioning the double balloon catheter **40** with the first balloon **26** with the frame at the level of the aortic annulus **2***a*, the second IV balloon **26'** being inside the left ventricle beyond the aortic annulus **2***a* (FIG. **15***a*);

2/ compression of the stenosed aortic valve **1'**, **2'** with the first balloon **26** having a 20 mm, preferably with a 23 mm diameter, the balloon being inflated maximally up to the bursting point, to prepare the IV insertion (FIG. **15***b*). Inflation lasts a few seconds (preferably 10 seconds at most) with powerful pressure being used to expand the frame and forcefully embed said frame in the remains of the dilated valve;

3/ an immediate speedy deflation of said first balloon **26** follows (FIG. **15***c*); as soon as the balloon **26** is beginning to clearly deflate, the first frame **10** remaining attached to the stenosed valve **1'**, **2'**, the catheter is withdrawn to position the IV balloon **26'** inside the previously expanded frame **26** (FIG. **15***c* in which the frame **10'** is partially drawn for clarity purpose); and

4/ immediately after being well positioned, the IV balloon **26'** is promptly inflated, to expand the IV **13** (FIG. **15***c*); and/when the IV **13** is blocked inside the first frame **10**, the IV balloon **26'** is deflated (FIG. **18***f*).

Finally, the whole device has to be withdrawn to allow homeostasis of the femoral artery puncture hole.

The total duration of the successive steps, particularly the time during which the balloons are inflated, and the time during which the frame is expanded whereas the valve has not yet been positioned and expanded, is about 20 to 30 seconds. This is feasible if the balloons are inflated and deflated within very a few seconds, 6 to 8, for instance. This is permitted if the lumen of the shaft can be sufficiently large, taking into account the inescapable small diameter size of the shaft. This can also be facilitated by a device producing instantaneously a strong inflation or deflation pressure.

In a variation of the two part frame embodiment described above, the second frame may be configured to self-expand at the treatment site. In this embodiment, the first frame is expanded using a balloon, as generally shown in FIGS. **15***a* through **15***c*. The first frame provides a scaffold to hold open the stenosed native valve. The second frame, having the valvular structure attached thereto, is advanced to a location adjacent to the first frame and is allowed to self-expand, preferably within the first frame. In this embodiment, the second frame is preferably made of a shape memory material configured to be collapsed and delivered within a lumen of a sheath. An inner catheter may be used to grip the second frame such that relative movement between the sheath and inner catheter results in the ejection of the second frame from the sheath. In this embodiment, it will be appreciated that a double balloon catheter is not necessary. In one variation, a tether may be attached to the second frame such that the second frame can be withdrawn into the sheath in the event that the initial deployment is not satisfactory. Examples of self-expanding implantable valves and associated delivery methods suitable for use with the present invention can be found in Applicant's co-pending U.S. application Ser. No. 10/390,951, filed Mar. 18, 2003, which is incorporated by reference herein in its entirety.

In another embodiment, somewhat analogous to the procedures shown in FIGS. **13***a* to **13***l* and **15***a* to **15***f*, a new prosthetic valve may be implanted within a previously implanted prosthetic valve. For purposes of illustration, FIG. **16***a* illustrates a first prosthetic valve **50** that has been implanted within a stenotic aortic valve **56**. In this example, the first prosthetic valve was implanted within the native aortic valve **56** after the native leaflets **64**, **68** had become thickened, distorted and/or calcified. The first prosthetic valve generally comprises a frame portion **52** and a valvular structure **54**. FIG. **16***a* illustrates the valvular structure **54** in the fully open (i.e., dilated) condition. Additional details regarding the structure of the first prosthetic valve **50** can be found in Applicant's U.S. Pat. No. 6,893,460, which issued on May 17, 2005 and which is incorporated by reference herein. FIG. **16***a* further illustrates coronary ostia **58** and a guidewire **62** extending through the first prosthetic valve **50**, the distal end of the guidewire **62** located in left ventrical **66**.

A second prosthetic valve **70** is configured to be implanted within the first prosthetic valve **50** through the use of either of the procedures described above with respect to FIGS. **13***a* to **13***l* and **15***a* to **15***f*. It is contemplated that other endovascular

or surgical procedures may be used as well. The result would resemble the configuration shown in FIG. **16***b*, wherein the second prosthetic valve **70** has been implanted within the first, previously implanted prosthetic valve **50**. The second prosthetic valve **70** is preferably formed with a frame portion having a smaller expanded diameter, such as about 20 mm, as compared with the frame portion **52** of the first prosthetic valve **50**. Accordingly, the second prosthetic valve **70** can be fully expanded within the first prosthetic valve **50**. This procedure advantageously provides a method for replacing the function of a prosthetic valve that has calcified or has otherwise diminished in functionality due to wear or fatigue. If the first prosthetic valve has become calcified or hardened such that it has become stenotic, a balloon may be used to dilate the first prosthetic valve before implantation of the second prosthetic valve. Otherwise, it may not be necessary to dilate the first prosthetic valve before delivering the second valve.

FIGS. **16***c* and **16***d* are top cross-sectional views that further illustrate the placement of the second prosthetic valve **70** within the first prosthetic valve **50**. More particularly, FIG. **16***c* is a top cross-sectional view of the first prosthetic valve **50** implanted within a native valve **56** having leaflets **64**, **68** as described above with respect to FIG. **16***a*. It can be seen that the first prosthetic valve has a substantially cylindrical configuration wherein the frame portion **52** supports the valvular structure **54**. The valvular structure **54** is shown in the fully open (i.e., dilated) position with the guidewire **62** extending therethrough. FIG. **16***d* provides a top cross-sectional view of the second prosthetic valve **70** placed within the first prosthetic valve **50**, as described above with respect to FIG. **16***b*. It can be seen that, after expansion, the frame portion **72** of the second prosthetic valve **70** engages and holds open the valvular structure **54** of the first prosthetic valve **50** for replacing the function thereof. The valvular structure **74** of the second prosthetic valve **70** is illustrated in a substantially closed position with the guidewire extending therethrough. After the second prosthetic valve is implanted within the first prosthetic valve, the balloon catheter and guidewire **62** are removed. Although the second prosthetic valve is generally described above as being balloon expandable, in an alternative embodiment, the second prosthetic valve may be a self-expanding valve configured to be delivered within a sheath.

In a variation of the method described immediately above, the valvular structure of the original prosthetic valve may be removed before deployment of the new prosthetic valve. In one embodiment, the valvular structure is releasably coupled to the frame, such as via a releasable mechanical coupling, thereby facilitating removal. In this embodiment, the new valvular structure may be attached to the frame via a variety of known attachment mechanisms, such as, for example, crimping, locking or threadable engagement.

With reference again to FIGS. **14** and **15***a* to **15***f*, in another alternative method of replacing an existing prosthetic valve, the second frame **10'** and the valvular structure **14** of expandable valve **13** may be collapsed and removed from the first frame **10** as a unit. This may be achieved using a tool capable of providing an inward radial force for collapsing the frame. A new prosthetic valve similar to expandable valve **13** may then be deployed within the first frame **10** in general accordance with the steps shown in FIGS. **15***d* through **15***f*. Alternatively, if the second frame is a self-expanding frame, the second frame and valvular structure may be withdrawn into a sheath and a new self-expanding valve may be deployed within the first frame **10**.

For purposes of illustration, various preferred embodiments of the above devices and methods have been described wherein a prosthetic valve is advanced percutaneously through the aorta in a retrograde direction for implantation at the site of a native aortic valve. However, a variety of alternative procedures are also contemplated wherein an expandable member is used to dilate a stenotic native valve and an expandable prosthetic valve is percutaneously delivered to the treatment site and expanded to contact the native leaflets for replacing the valve function of the stenotic native valve. In one example, the expandable prosthetic valve may be advanced in an antegrade direction, such as by using a transseptal route. Furthermore, it will be appreciated that the general principles of the procedures shown in FIGS. **13***a* to **13***l* and **15***a* to **15***f* may be applied in alternative minimally invasive approaches, such as, for example, by passing the prosthetic valve through a small incision in the chest wall. In preferred embodiments, an aortic valve is treated by delivering an expandable member (e.g., dilatation balloon) and a prosthetic valve via a transapical approach. Still further, the principles of the procedures shown in FIGS. **13***a* to **13***l* and **15***a* to **15***f* may be applied in a surgical approach wherein direct access to the heart valve is provided.

The preceding specific embodiments are illustrative of the practice of the invention. It is to be understood, however, that other expedients known to those skilled in the art or disclosed herein, may be employed without departing from the spirit of the invention of the scope of the appended claims.

What is claimed is:

1. A method of implanting a prosthetic heart valve in a patient, comprising:

providing a two-part heart valve, each part being expandable from a compressed state, a first part comprising an external scaffolding frame expandable into a substantially cylindrical shape having an interior surface defining an opening, and a second part comprising a collapsible valvular structure fastened within an internal frame, the valvular structure comprising valve leaflets formed of a biological material;

delivering the external scaffolding frame in its compressed state to an annulus of a native semi-lunar heart valve in a human heart;

expanding the external scaffolding frame into an expanded state to secure the external scaffolding frame within the annulus of the native semi-lunar heart valve;

delivering the second part to within the opening of the expanded external scaffolding frame; and

expanding the internal frame against the interior surface of the external scaffolding frame such that the internal frame is fixed to the external scaffolding frame.

2. The method of claim **1**, wherein delivering the external scaffolding frame to the annulus includes advancing the external scaffolding frame via a catheter introduced into a femoral artery.

3. The method of claim **2**, further including gaining access to the femoral artery using an arterial introducer having a size of 18 F (5.7 mm) or less.

4. The method of claim **1**, wherein the external scaffolding frame is balloon-expandable.

5. The method of claim **1**, wherein both the first and second parts are expanded using separate balloons.

6. The method of claim **5**, wherein both balloons for expanding the first and second parts are located on a single catheter.

7. A method of implanting a prosthetic heart valve within a native aortic valve, comprising:

inflating a balloon to dilate the native aortic valve;

delivering a balloon-expandable external scaffolding stent in a compressed state to an annulus of the native aortic valve, the external scaffolding stent comprising a grate

shaped frame forming a substantially cylindrical structure having an interior surface defining an opening;

expanding the external scaffolding stent into an expanded state within the dilated native aortic valve for contacting the leaflets of the native aortic valve and maintaining the native aortic valve in a dilated condition;

delivering a collapsible valvular structure fastened within an internal stent to a location within the expanded external scaffolding stent, the valvular structure comprising valve leaflets formed of a biological material; and

expanding the internal stent against the interior surface of the external scaffolding stent to form the prosthetic heart valve, wherein the internal stent is fixed to the external scaffolding stent.

8. The method of claim **7**, wherein delivering the external scaffolding stent includes advancing the external scaffolding stent via a catheter introduced into a femoral artery.

9. The method of claim **7**, wherein both the external scaffolding stent and valvular structure are expanded using separate balloons.

10. The method of claim **9**, wherein the external scaffolding stent is stronger than the internal stent such that a higher balloon pressure is required to expand the external scaffolding stent than the internal stent.

11. A method of treating aortic stenosis in a human heart, comprising:

inserting a balloon catheter through an opening in a femoral artery;

percutaneously advancing the balloon catheter through an aorta in a retrograde direction to a location within a native aortic valve;

inflating a balloon disposed on the distal end portion of the balloon catheter to dilate stenosed leaflets of the native aortic valve;

deflating the balloon and withdrawing the balloon catheter from the native aortic valve;

inserting a delivery catheter through the opening in the femoral artery, the delivery catheter having a prosthetic heart valve disposed along a distal end portion thereof;

percutaneously advancing the delivery catheter through the aorta in the retrograde direction until the prosthetic heart valve is located within the native aortic valve; and

radially expanding the prosthetic heart valve such that the prosthetic heart valve contacts the stenosed leaflets of the native aortic valve;

wherein the prosthetic heart valve comprises a collapsible support structure and a collapsible valvular structure coupled to the support structure, the valvular structure comprising leaflets formed of a biological material for occluding blood flow in one direction, the prosthetic heart valve further comprising an internal cover extending at least from an inlet end of the support structure to the valvular structure, the internal cover configured for preventing regurgitation through the support structure after the prosthetic heart valve is radially expanded within the native aortic valve.

12. The method of claim **11**, wherein the support structure comprises a stent and the valvular structure is sutured to the stent.

13. The method of claim **12**, wherein the valvular structure comprises tissue from a pig heart.

14. The method of claim **12**, wherein the valvular structure comprises bovine pericardium.

15. The method of claim **12**, wherein the support structure is a stent and the internal cover is attached to the stent.

16. The method of claim **15**, wherein the internal cover and the valvular structure are integrally attached.

17. The method of claim **16**, wherein the internal cover and the valvular structure are formed of the same biological material.

18. The method of claim **17**, wherein the biological material is pericardial tissue.

19. The method of claim **18**, wherein the internal cover and the valvular structure are sutured to the stent.

20. The method of claim **11**, wherein the internal cover extends only from the inlet end of the support structure to the valvular structure.

21. The method of claim **11**, wherein the collapsible support structure is made of a metallic material.

22. The method of claim **21**, wherein the metallic material forms a grate type structure.

23. The method of claim **11**, wherein the collapsible support structure has a concave profile.

24. The method of claim **11**, wherein the prosthetic heart valve is radially expanded by inflating a balloon within the prosthetic heart valve.

25. A method of treating aortic stenosis in a human heart, comprising:

inserting a balloon catheter through an opening in a femoral artery;

percutaneously advancing the balloon catheter through an aorta in a retrograde direction to a location within a native aortic valve;

inflating a balloon disposed on the distal end portion of the balloon catheter to dilate stenosed leaflets of the native aortic valve;

deflating the balloon and withdrawing the balloon catheter from the native aortic valve;

inserting a delivery catheter through the opening in the femoral artery, the delivery catheter having a prosthetic heart valve disposed along a distal end portion thereof;

percutaneously advancing the delivery catheter through the aorta in the retrograde direction until the prosthetic heart valve is located within the native aortic valve; and

radially expanding the prosthetic heart valve such that the prosthetic heart valve contacts the stenosed leaflets of the native aortic valve;

wherein the prosthetic heart valve comprises a collapsible metallic grate type stent and a collapsible valvular structure coupled to and located within the stent, the valvular structure comprising leaflets formed of a biological material for occluding blood flow in one direction, the prosthetic heart valve further comprising an internal cover attached to an interior surface of the stent and extending from the valvular structure toward an inlet end of the stent for preventing passage of blood through spaces between bars of the stent along a lower part of the stent while allowing blood to pass through spaces between bars of the stent along an upper part of the stent after the prosthetic heart valve is radially expanded within the native aortic valve.

* * * * *

UNITED STATES PATENT AND TRADEMARK OFFICE

(12) CERTIFICATE EXTENDING PATENT TERM
UNDER 35 U.S.C. § 156

(68)	PATENT NO.	:	7,585,321
(45)	ISSUED	:	September 8, 2009
(75)	INVENTOR	:	Alain Cribier
(73)	PATENT OWNER	:	Edwards Lifesciences PVT, Inc.
(95)	PRODUCT	:	Edwards SAPIEN 3® (transcatheter heart valve)

This is to certify that an application under 35 U.S.C. § 156 has been filed in the United States Patent and Trademark Office, requesting extension of the term of U.S. Patent No. 7,585,321 based upon the regulatory review of the product Edwards SAPIEN 3® (transcatheter heart valve) by the Food and Drug Administration. According to United States Patent and Trademark Office records, the original expiration date of the patent as of the date of issuance of this certificate is July 1, 2019. Because it appears that the requirements of the law have been met, this certificate extends the term of the patent for the period of

(94) 957

subject to the payment of maintenance fees as provided by law, with all rights pertaining thereto as provided by 35 U.S.C. § 156.

I have caused the seal of the United States Patent and Trademark Office to be affixed this 17th day of December 2019.

Andrei Iancu
Under Secretary of Commerce for Intellectual Property and
Director of the United States Patent and Trademark Office