US 20110098802A1

(19) United States

(12) Patent Application Publication

Braido et al.

(10) Pub. No.: US 2011/0098802 A1

(43) Pub. Date: Apr. 28, 2011

(54) **COLLAPSIBLE AND RE-EXPANDABLE PROSTHETIC HEART VALVE CUFF DESIGNS AND COMPLEMENTARY TECHNOLOGICAL APPLICATIONS**

(75) Inventors: **Peter N. Braido**, Wyoming, MN (US); **Paul E. Ashworth**, Wyoming, MN (US); **Julia A. Neuman**, Minneapolis, MN (US)

(73) Assignee: **St. Jude Medical, Inc.**

(21) Appl. No.: **12/737,256**

(22) PCT Filed: **Jul. 15, 2009**

(86) PCT No.: **PCT/US09/04094**

§ 371 (c)(1), (2), (4) Date: **Dec. 22, 2010**

Related U.S. Application Data

(60) Provisional application No. 61/134,995, filed on Jul. 15, 2008.

Publication Classification

(51) **Int. Cl.**
A61F 2/82 (2006.01)
A61F 2/24 (2006.01)

(52) **U.S. Cl.** **623/1.26**; 623/2.17; 623/2.11

(57) **ABSTRACT**

A prosthetic heart valve is provided with a cuff (**85**, **285**, **400**) having features which promote sealing with the native tissues even where the native tissues are irregular. The cuff may include a portion (**90**) adapted to bear native aortic valve. The valve may include elements (**210**, **211**, **230**, **252**, **253**) for biasing the cuff outwardly with respect to the stent body when the stent body is in an expanded condition. The cuff may have portions of different thickness (**280**) distributed around the circumference of the valve in a pattern matching the shape of the opening defined by the native tissue. All or part (**402**) of the cuff may be movable relative to the stent during implantation.

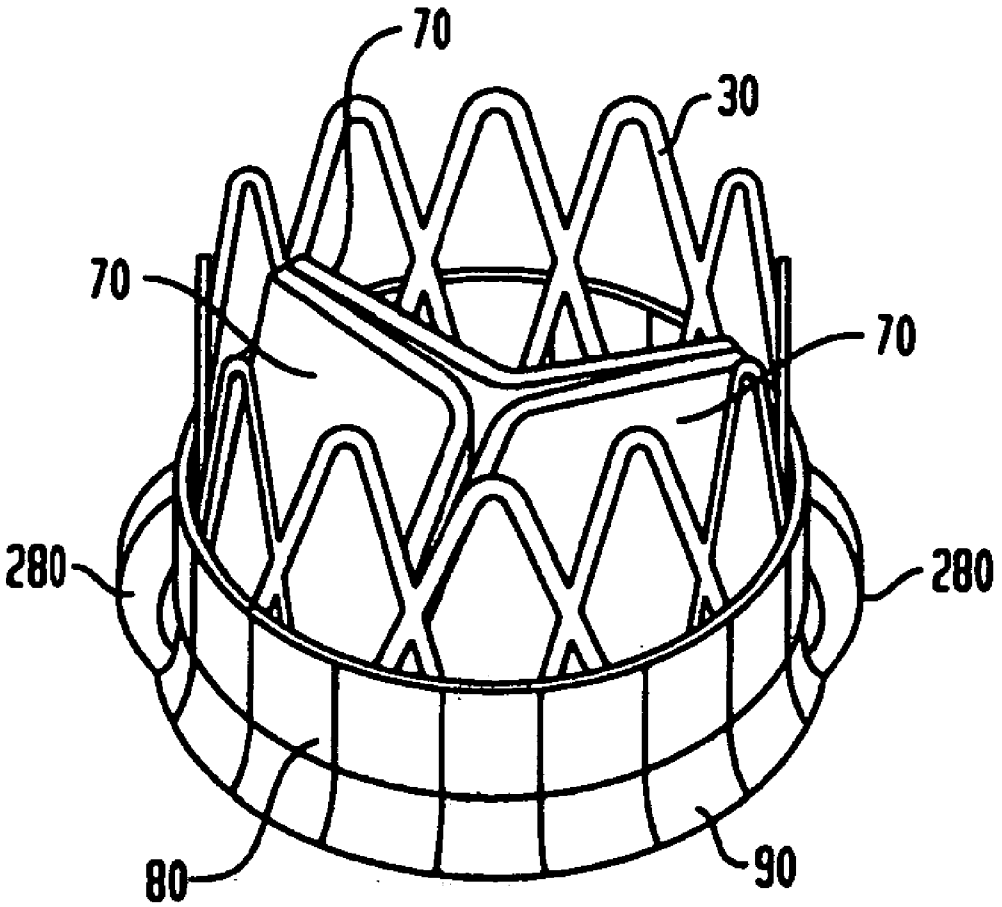

Edwards v. Aortic Innovations
U.S. Patent 11,491,033
Edwards Ex. 1054

FIG. 1

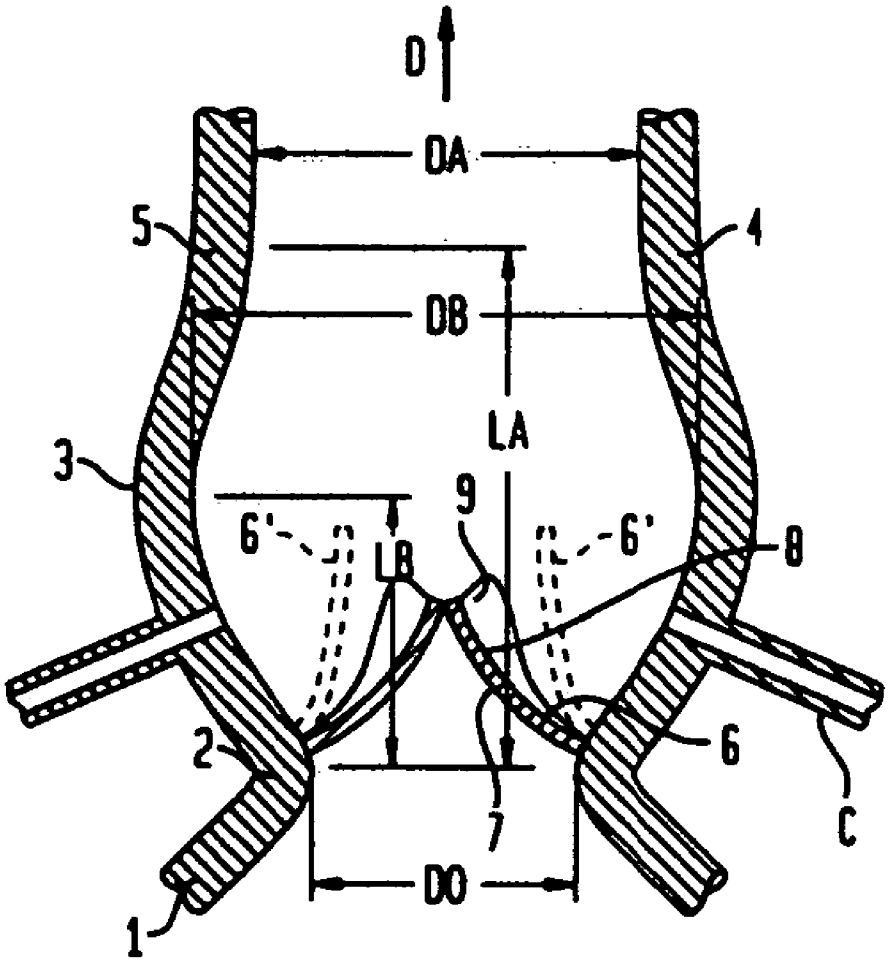

FIG. 2

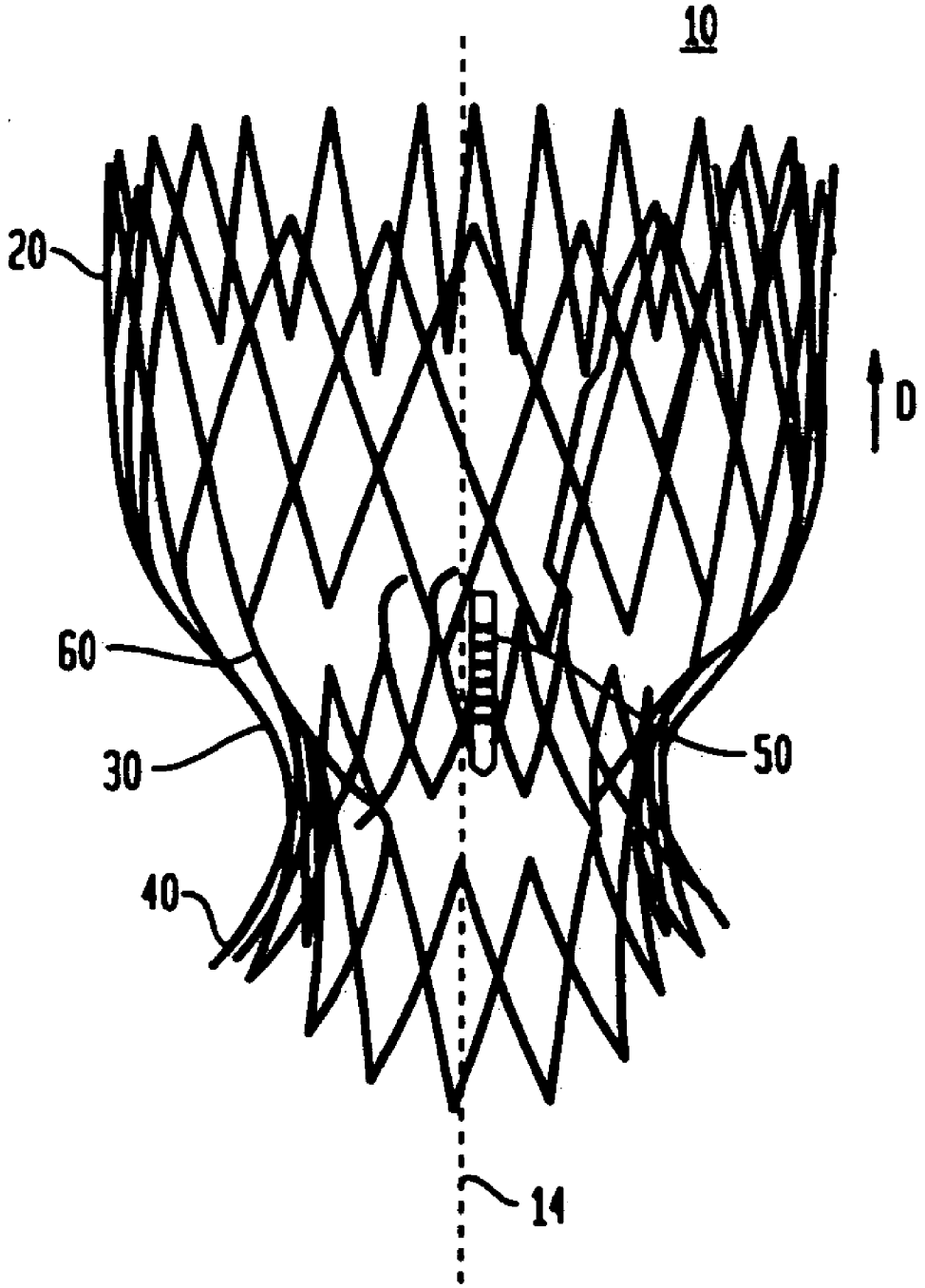

FIG. 3

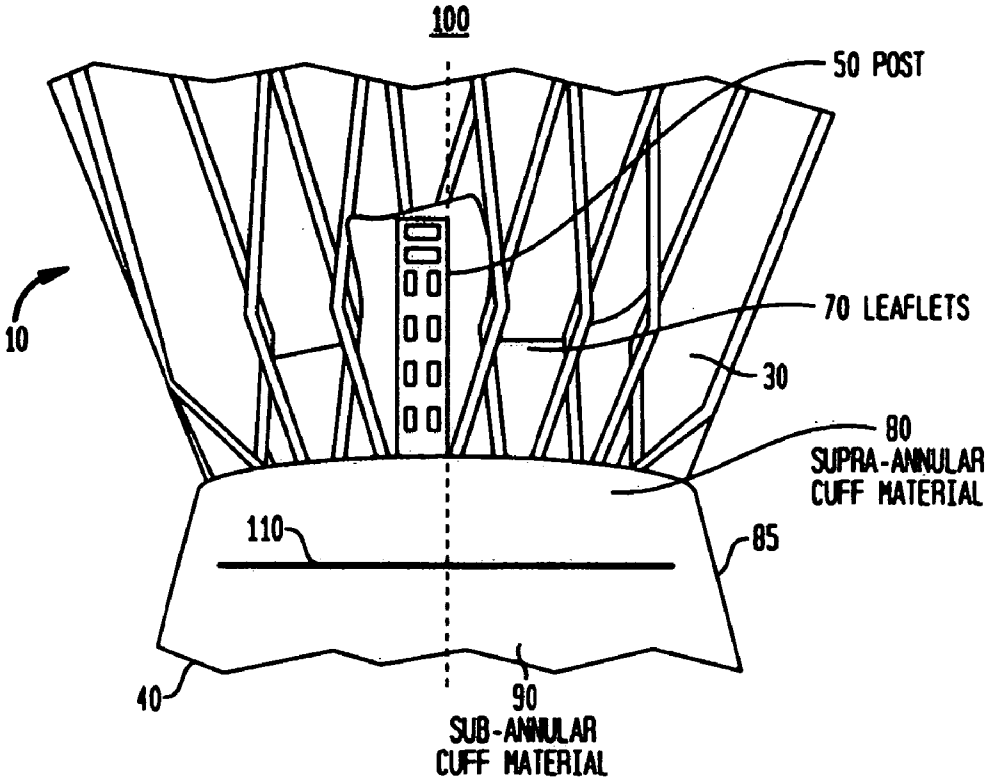
100
50 POST
70 LEAFLETS
10
30
80
SUPRA-ANNULAR
CUFF MATERIAL
110
85
40
90
SUB-ANNULAR
CUFF MATERIAL

FIG. 4

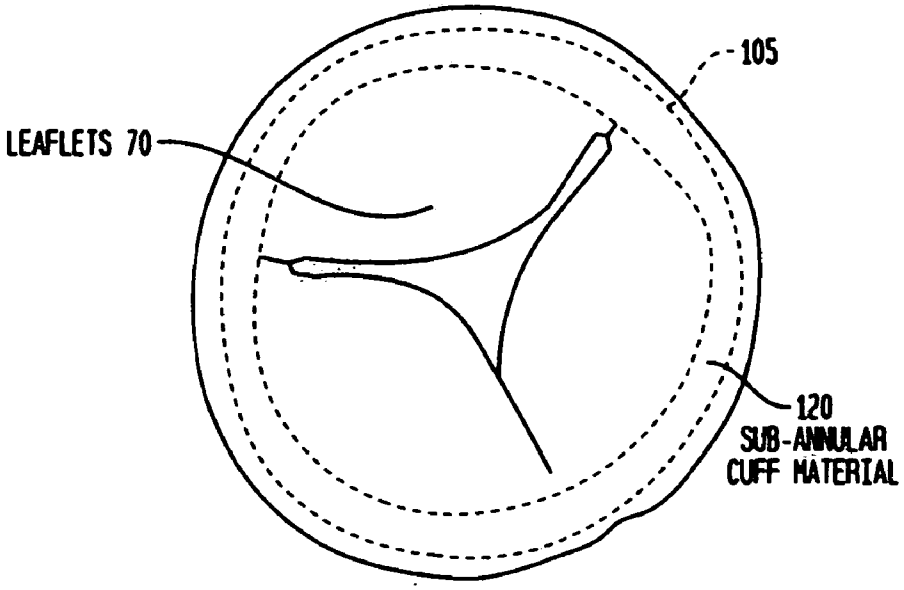
105
LEAFLETS 70
120
SUB-ANNULAR
CUFF MATERIAL

FIG. 5

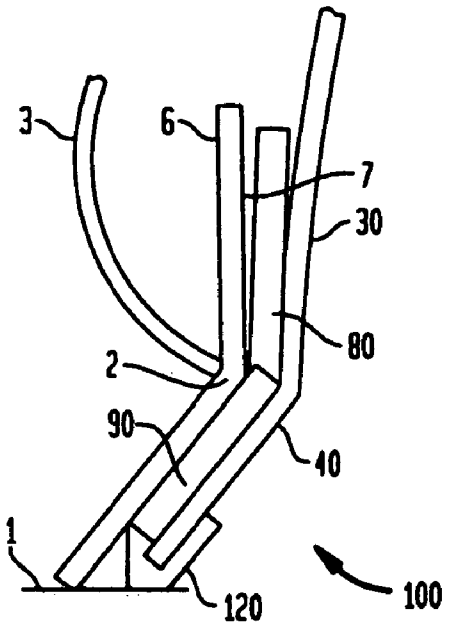

FIG. 6

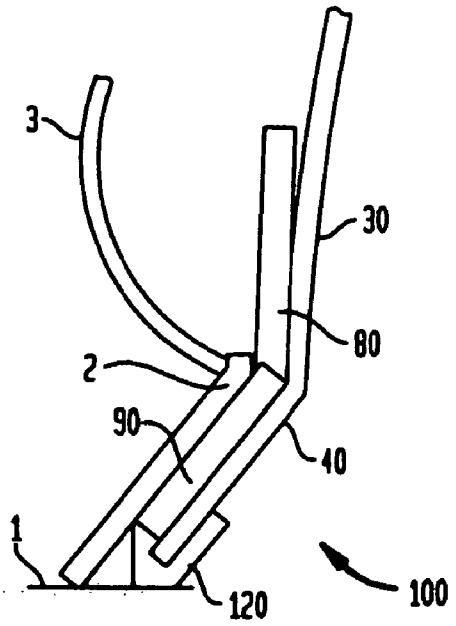

FIG. 7

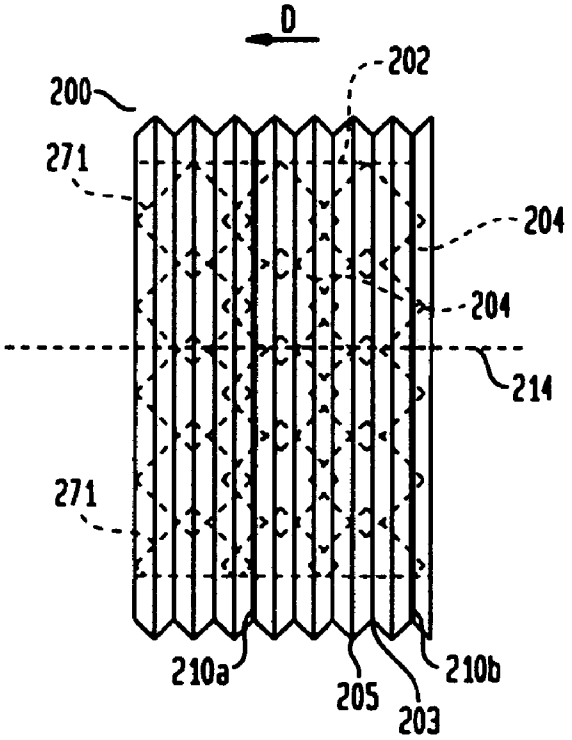

FIG. 8

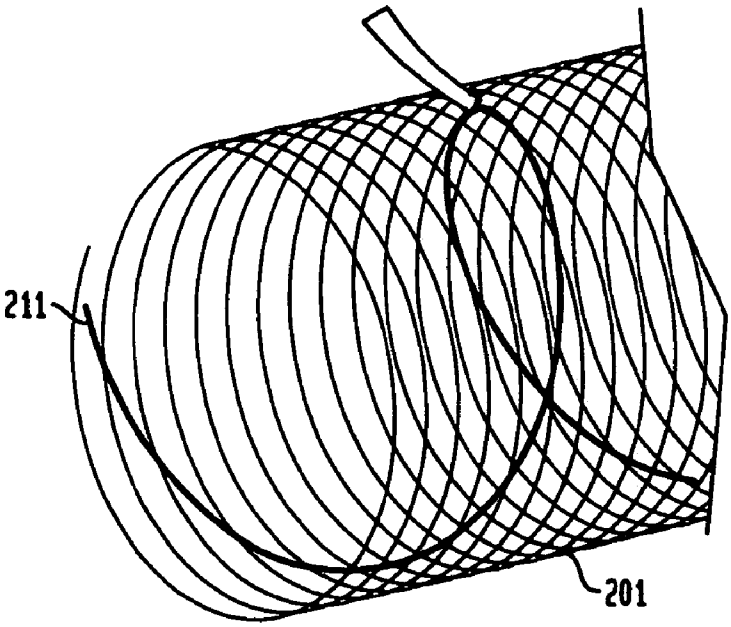

FIG. 9

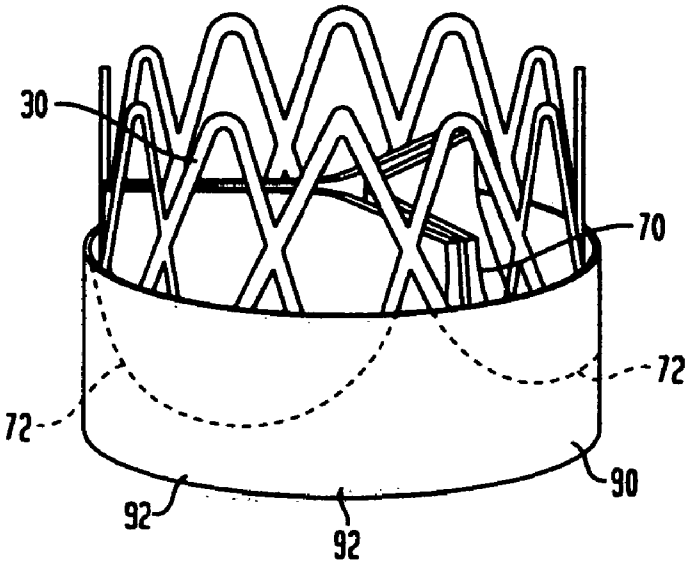

FIG. 10

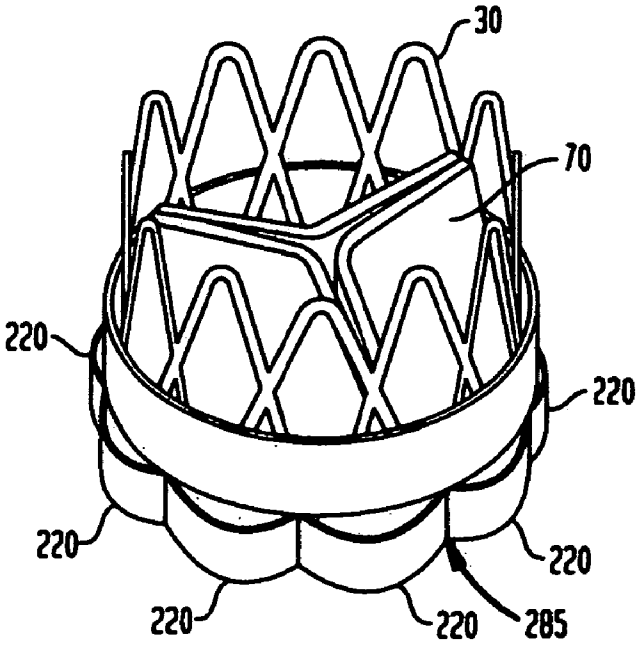

FIG. 11

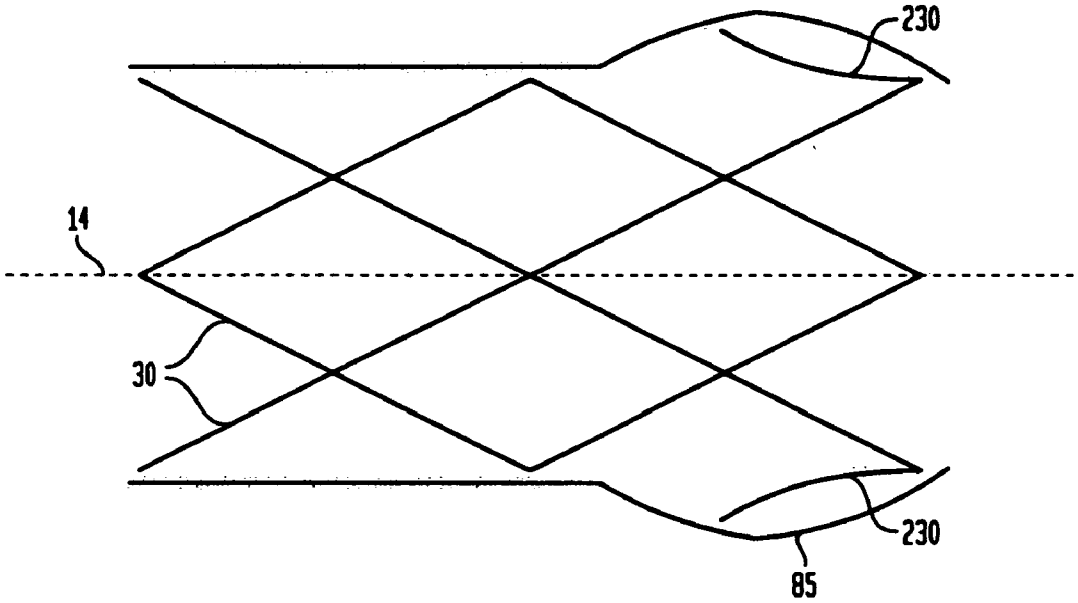

FIG. 12A

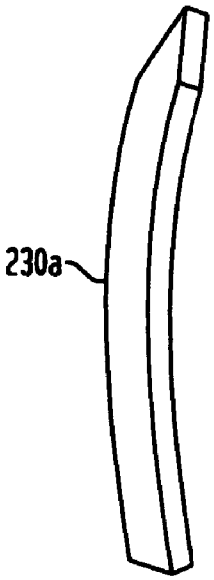

FIG. 12B

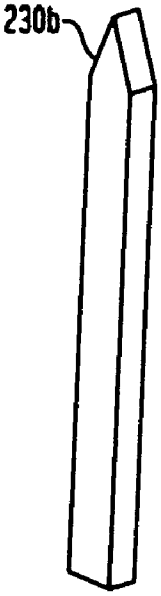

FIG. 12C

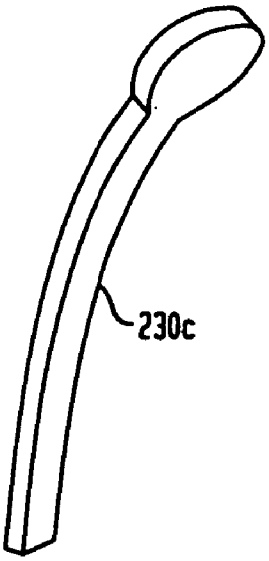

FIG. 12D

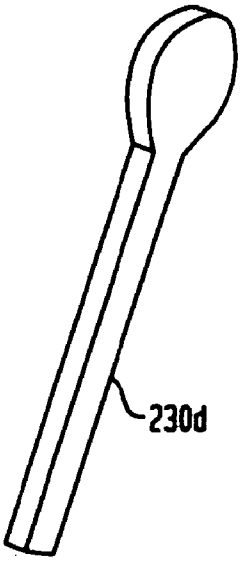

FIG. 13

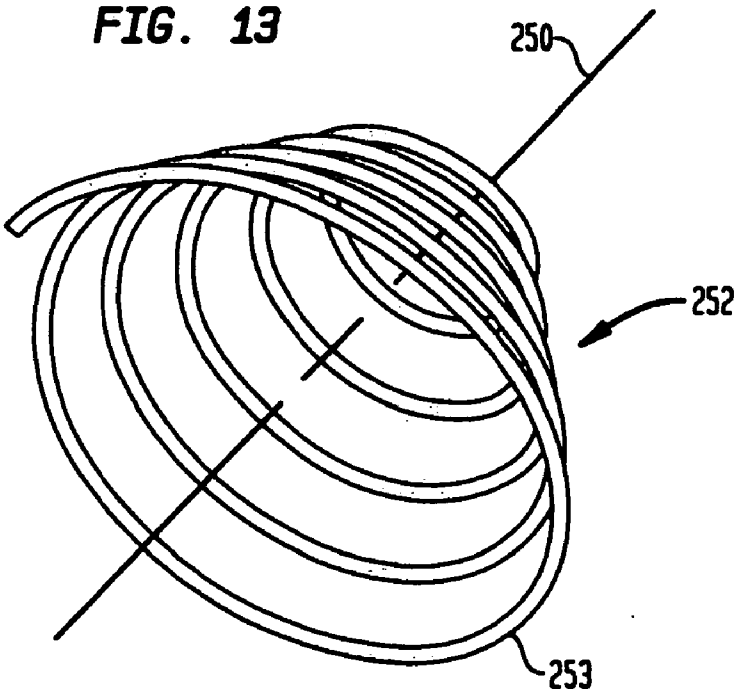

FIG. 14

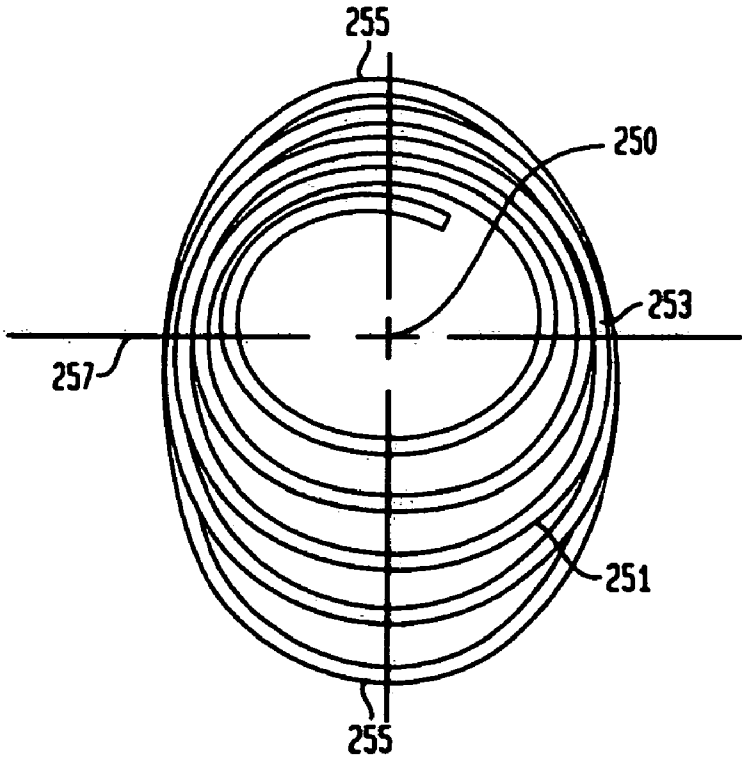

FIG. 15

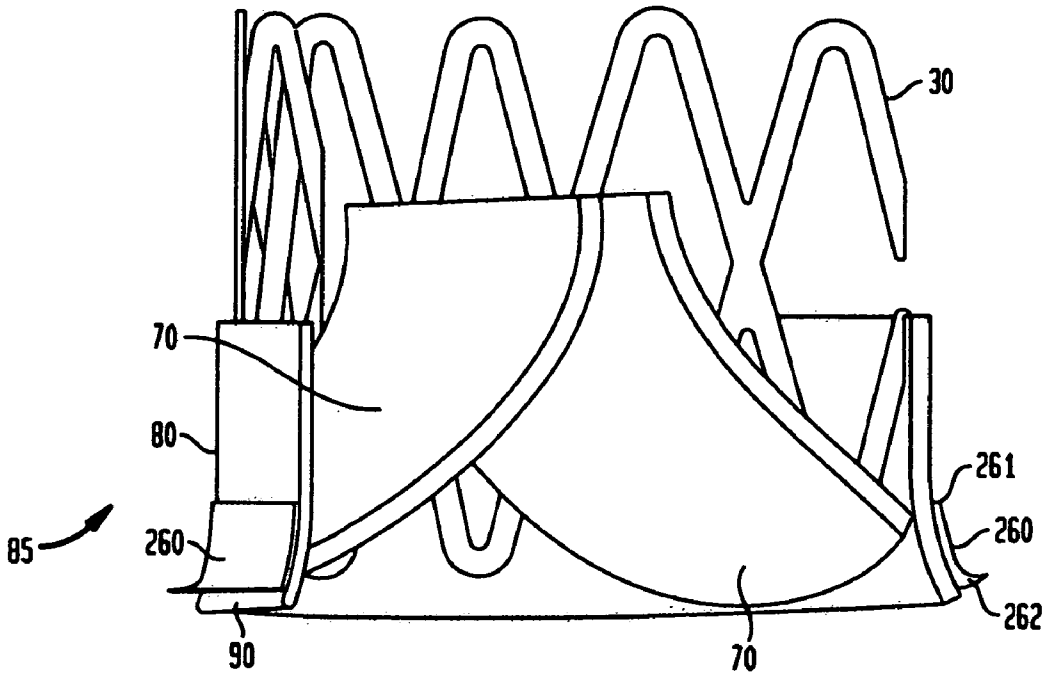

FIG. 16

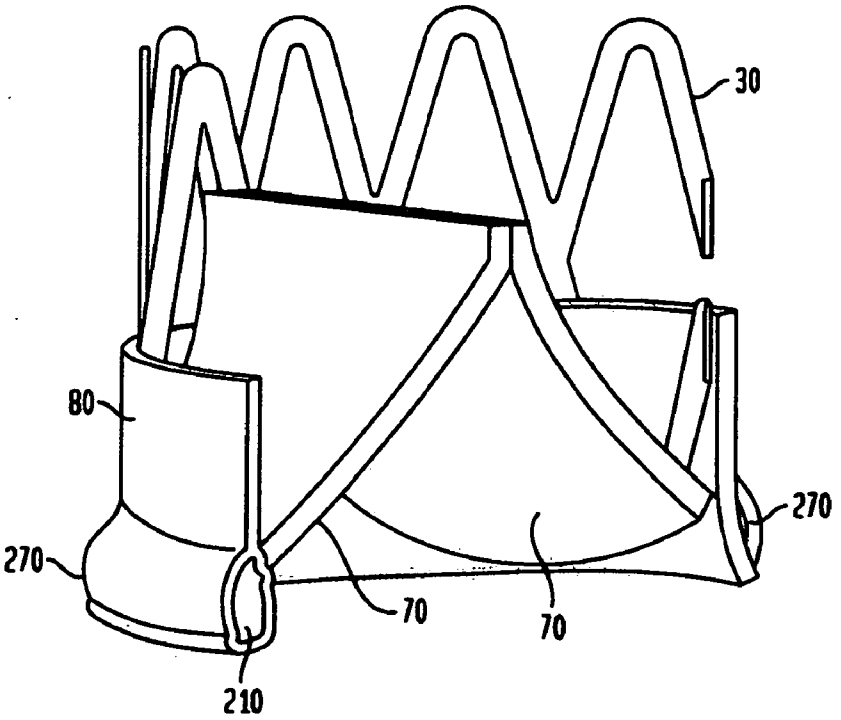

FIG. 17

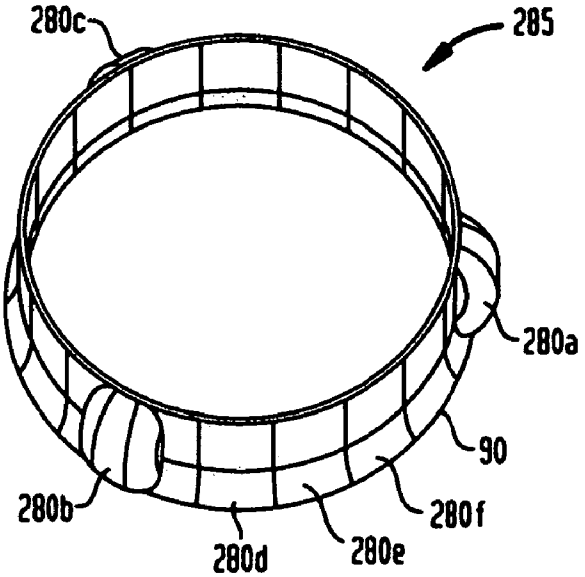
280c
285
280a
90
280b
280f
280d
280e

FIG. 18

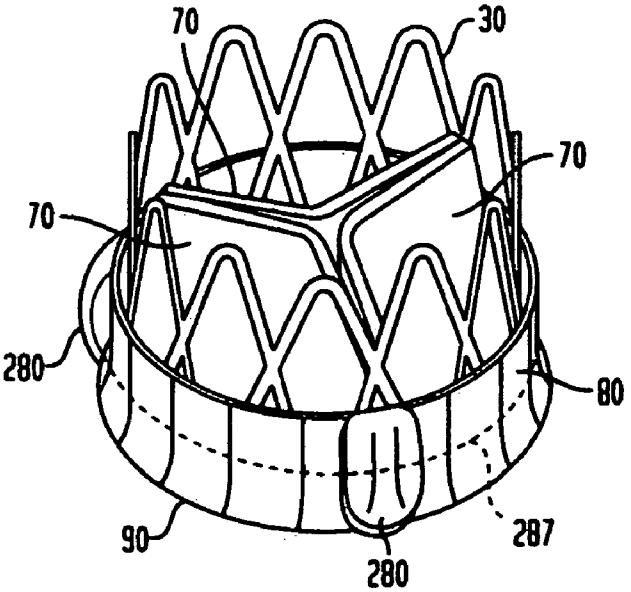
70
30
70
70
280
80
90
287
280

FIG. 19

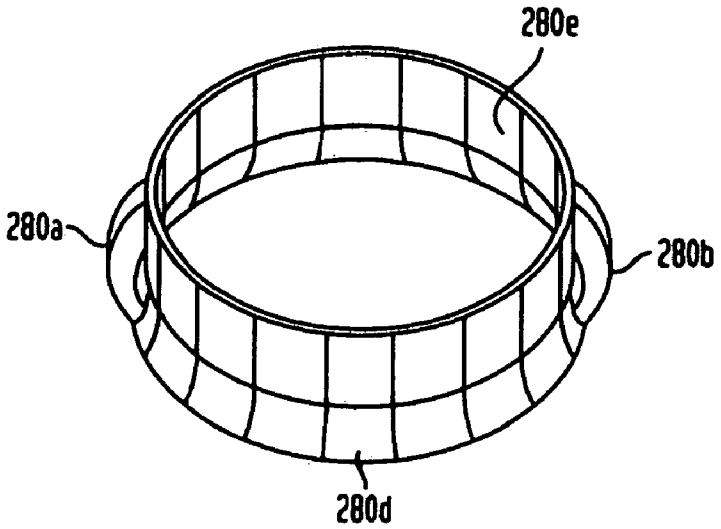

FIG. 20

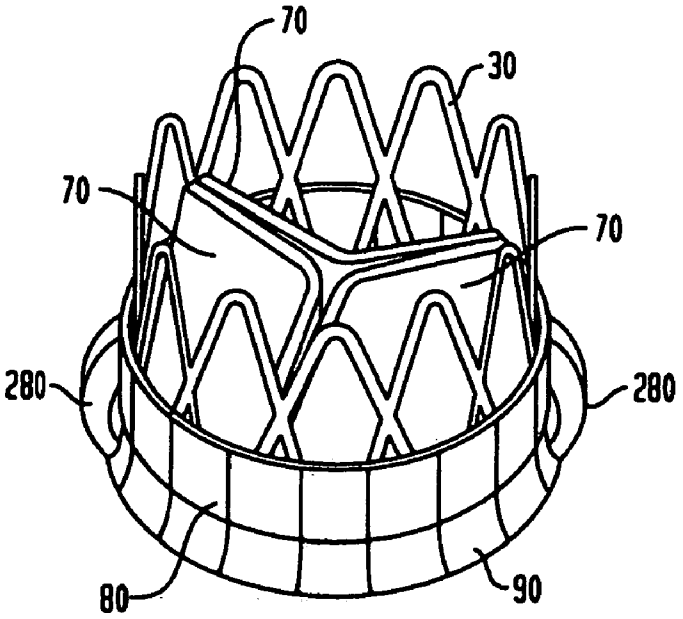

FIG. 21

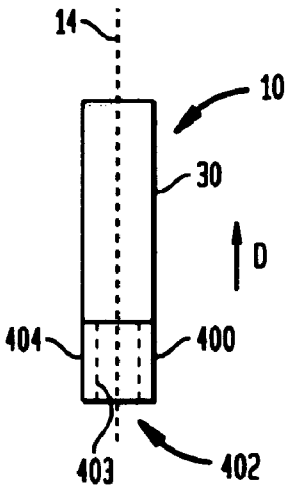

FIG. 22

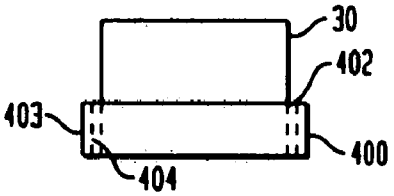

FIG. 23

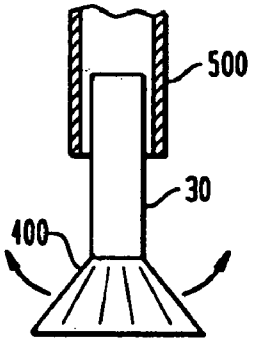

FIG. 24

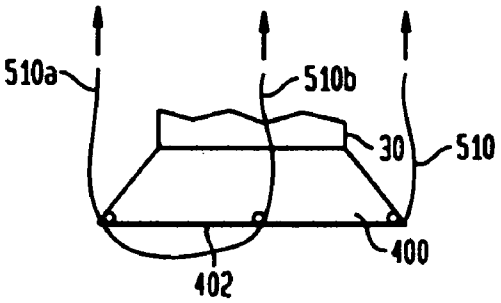

FIG. 25

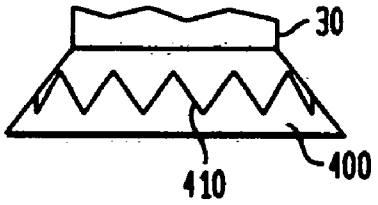

FIG. 26

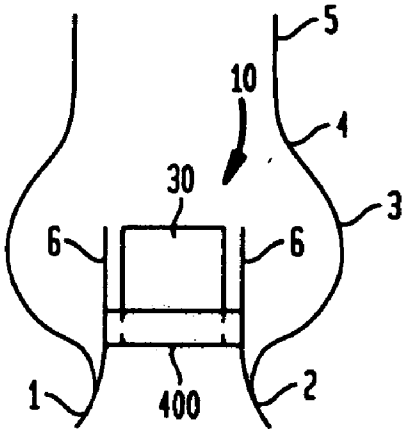

FIG. 27

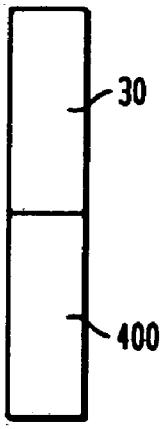

FIG. 28

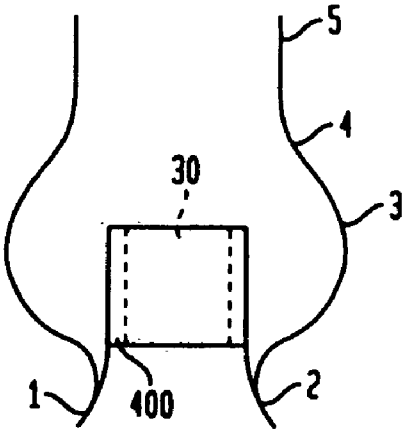

FIG. 29

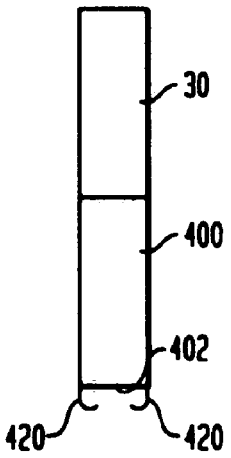

FIG. 30

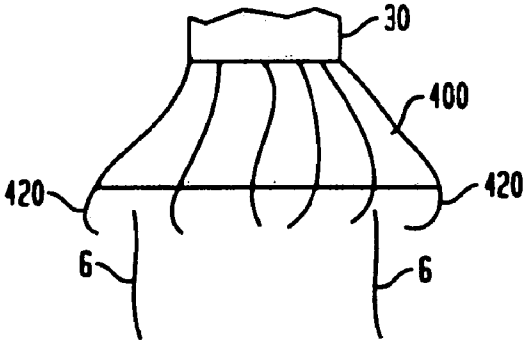

FIG. 31

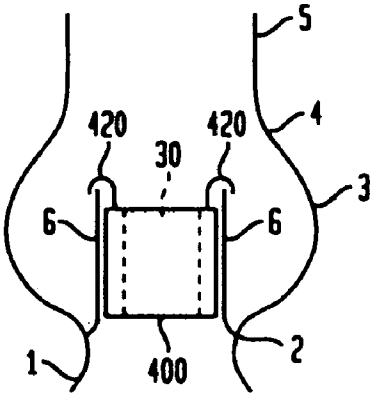

FIG. 32

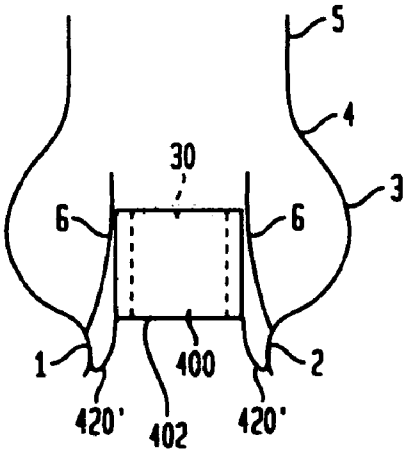

FIG. 33

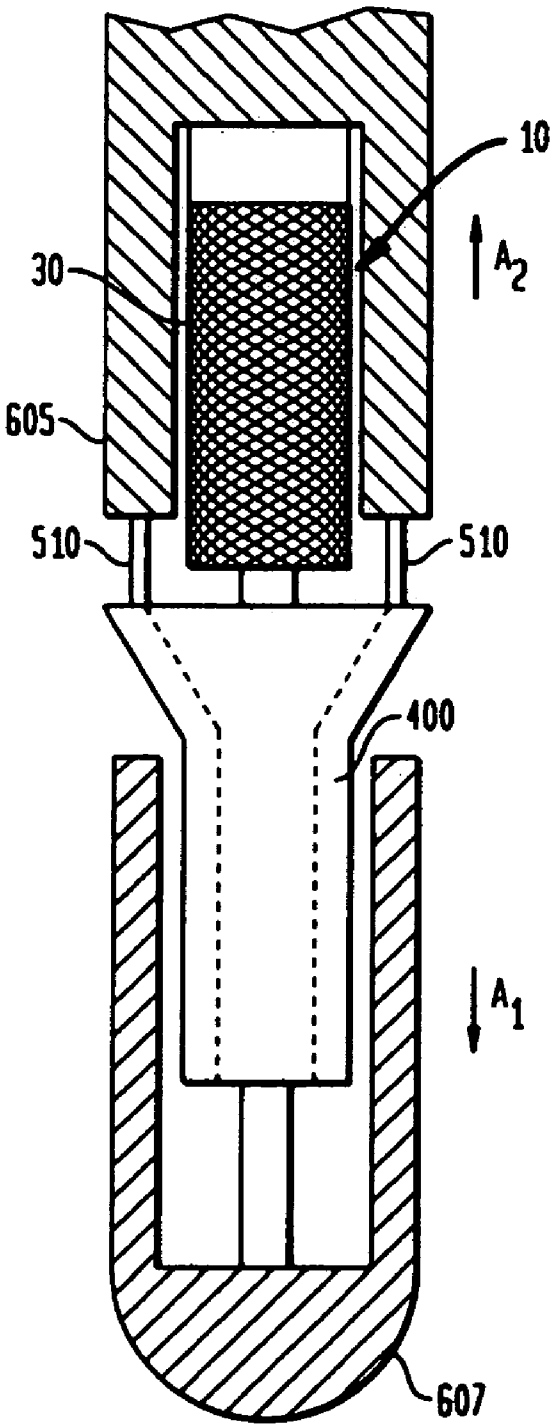

FIG. 34

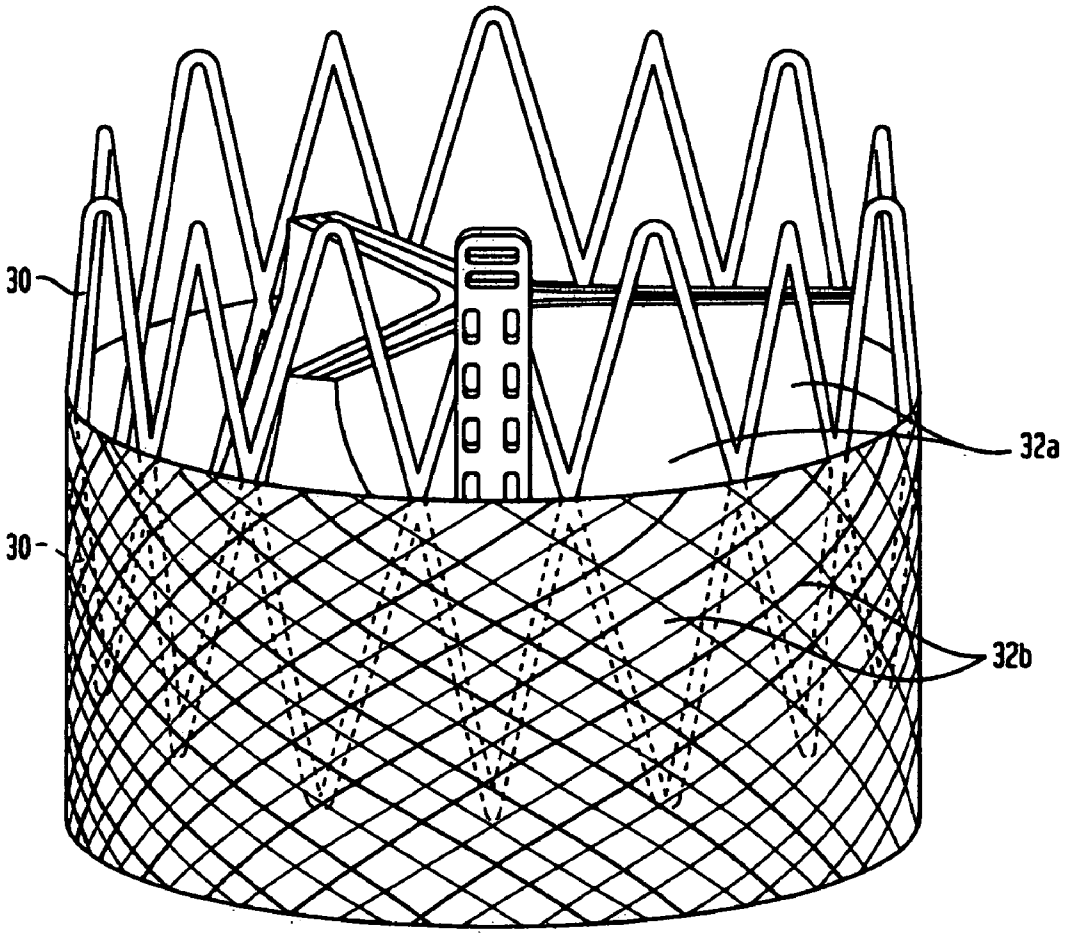

COLLAPSIBLE AND RE-EXPANDABLE PROSTHETIC HEART VALVE CUFF DESIGNS AND COMPLEMENTARY TECHNOLOGICAL APPLICATIONS

CROSS-REFERENCE TO RELATED APPLICATIONS

[0001] This application claims the benefit of the filing date of U.S. Provisional Patent Application No. 61/134,995 filed Jul. 15, 2008, the disclosure of which is hereby incorporated herein by reference.

FIELD OF THE INVENTION

[0002] The present invention is directed to prosthetic heart valves for replacement of native heart valves, to components for use in such prosthetic heart valves, and to methods of treating patients with such prosthetic heart valves.

BACKGROUND OF THE INVENTION

[0003] Certain prosthetic heart valves incorporate an expandable stent body and valve elements such as prosthetic valve leaflets mounted to the stent body. The prosthetic valve may also include a cuff including one or more layers of materials such as fabric or animal tissue. Valves of this type may be implanted in the heart by advancing the valve into the body of the patient with the stent body and cuff in a collapsed condition in which the stent body and cuff has a relatively small diameter. Once the valve is positioned at the desired implantation site, the stent body is brought to an expanded condition in which a portion of the stent body has a generally tubular shape. This portion engages the surrounding native tissue and holds the valve in place. The cuff forms a lining covering all or part of the tubular stent body. The valve acts as a functional replacement for the diseased native valve. Thus, the valve elements inside the stent body permit blood flow in the antegrade direction but substantially block flow in the opposite, retrograde direction. For example, a prosthetic valve may be advanced to a site within a diseased native aortic valve percutaneously through the arterial system and into the aorta to the native aortic valve. In a transapical placement, a prosthetic valve may be advanced through an incision in the apex of the heart and through the left ventricle to the native aortic valve. Other approaches through other access sites can be used. Once the prosthetic valve is in place, it permits flow from the left ventricle into the aorta when the left ventricle contracts during systole, but substantially blocks retrograde flow from the aorta into the left ventricle during diastole.

[0004] There are significant challenges in design of an expandable valve. For example, the valve desirably can be collapsed to a relatively small diameter to facilitate advancement into the body. This imposes significant limitations on the design of the cuff as, for example, the thickness of the material which can be incorporated in the cuff. However, the stent body must be capable of expanding to an operative, expanded condition in which the stent body securely engages the surrounding native tissues to hold the valve in place. The stent body and the cuff carried on the stent body should form a good seal with the surrounding native tissues to prevent leakage around the outside of the prosthetic valve, commonly referred to as perivalvular leakage. However, the stent body and cuff should not apply excessive forces to the annulus of the native valve. Excessive forces on the annulus of the native aortic valve can disrupt the electrical conduction system of the heart and also can impair the functioning of the mitral valve. These issues are complicated by the fact that the diseased native valve leaflets and other diseased tissues may present an implantation site which is irregular. For example, patients with calcified or stenotic aortic valves may not be treated well with the current collapsible valve designs, and may encounter problems such as (1) perivalvular leakage (PV leak), (2) valve migration, (3) mitral valve impingement, (4) conduction system disruption, etc., all of which can lead to adverse clinical outcomes. To reduce these adverse events, the optimal valve would seal and anchor adequately without the need for excessive radial force that could harm nearby anatomy and physiology.

[0005] Numerous prosthetic valve and stent body designs have been proposed. However, despite all of the attention devoted to such designs, still further improvements would be desirable.

BRIEF SUMMARY OF THE INVENTION

[0006] One aspect of the present invention provides a prosthetic heart valve. The valve according to this aspect of the invention desirably includes a stent body having a generally tubular annulus region. The stent body, and particularly the annulus region, has a proximal-to-distal axis. The stent body has a radially collapsed condition and a radially expanded condition, the annulus region increasing in diameter during transition from the radially collapsed condition to the radially expanded condition. The valve according to this aspect of the invention desirably includes one or more prosthetic valve elements as, for example, prosthetic valve leaflets. The prosthetic valve elements are mounted to the stent body and are operative to allow flow in the proximal direction through the annulus region but to substantially block flow in the proximal direction through the annulus region when the stent body is in the radially expanded condition.

[0007] The valve according to this aspect of the invention most preferably includes a cuff secured to the stent body. The cuff may include a first cuff portion covering at least a portion of the annulus region for disposition at said native valve annulus, the first cuff portion having a first diameter when the annulus region is in the radially expanded condition. In this aspect of the invention, the cuff desirably also includes a second cuff portion proximal to the first cuff portion, the second cuff portion having a second diameter when the annulus region is in the radially expanded condition, the second diameter being greater than the first diameter. The second cuff portion preferably is adapted for engagement with native tissue proximal to the native valve annulus. For example, where the prosthetic valve is implanted in a diseased native aortic valve, the second cuff portion may engage the left ventricular outflow tract or LVOT.

[0008] A further aspect of the invention provides a prosthetic valve which may have a stent body and valve element as discussed above. A valve according to this aspect of the invention desirably includes a cuff secured to the stent body and surrounding the annulus region, the cuff having one or more pleats adapted to collapse in axial directions and expand in radial directions upon transition of the stent body from the radially collapsed condition to the radially expanded condition. As further discussed below, the pleats can promote effective sealing with the surrounding native structures.

[0009] A valve according to yet another aspect of the invention desirably includes a stent body with a generally tubular annulus region having a proximal-to-distal axis, and desir-

ably also includes prosthetic valve elements mounted to the stent body as discussed above. The valve according to this aspect of the invention most preferably has a cuff secured to the stent body and surrounding the annulus region; and also has one or more biasing elements separate from the cuff. The biasing elements are mechanically connected to the stent body and to the cuff, and are adapted to bias at least a portion of the cuff outwardly with respect to the stent body. Merely by way of example, the biasing elements may include springs formed separately from the stent body or integral with the stent body, and may also include a hygroscopic, water-swellable material disposed between the cuff and the stent body. By biasing the cuff outwardly from the stent body, the biasing elements tend to promote intimate engagement between the cuff and the surrounding tissues, even where then surrounding tissues are irregular.

[0010] A still further aspect of the invention provides a prosthetic valve which includes an expansible stent body and valve elements, and which also includes a cuff secured to the stent body. The cuff desirably has a mobile portion movable in an axial direction with respect to the stent body so that when the stent body is in the radially collapsed condition, the mobile portion of the cuff is axially offset from the annulus region of the stent body. Most preferably, the mobile portion of the cuff can be displaced to an operative position in which the mobile portion of the cuff extends around the annulus section. For example, the cuff may have a generally tubular wall with a fixed end attached to stent body and a free end projecting axially away from the annulus section when the stent body is in the radially collapsed condition. In this arrangement, the mobile portion of the cuff includes the free end of the tubular wall. The tubular wall desirably is constructed and arranged so that the tubular wall may be turned inside-out so as to bring the free end of the tubular wall into the operative position. Thus, the free end of the tubular wall extends around the annulus region when the cuff is in the operative position.

[0011] Still another aspect of the invention provides a valve with a stent body and valve elements. The valve further includes a cuff having pockets with open sides. The open sides face in an axial direction, such as in the distal direction, so that flow of blood will tend to expand the pockets and bring the cuff into tighter engagement with the surrounding tissues.

[0012] Yet another aspect of the invention provides a valve having a stent body, valve elements, and a cuff having a plurality of regions arranged around the circumference of the stent body. In an operative, implanted condition, the regions of the cuff have differing radial thickness. For example, the cuff may include plural bulge regions separated from one another by intermediate regions having lesser radial thickness than the bulge regions. For example, a valve implanted in a generally triangular opening in a stenosed tricuspid arterial valve may have three bulge regions. The bulge regions may be lodged in the corners of the triangular opening. The various regions of the cuff may be provided with individual inflatable chambers, so that bulge regions and intermediate regions can be formed as required for an individual patient.

[0013] Still other aspects of the invention provide methods of implanting a valve such as those discussed above, and kits for performing such methods.

BRIEF DESCRIPTION OF THE DRAWINGS

[0014] The present invention may be more fully appreciated with reference to the following detailed description, which in turn refers to the drawings, wherein:

[0015] FIG. **1** is a schematic sectional representation of an aortic root anatomy;

[0016] FIG. **2** is a perspective view of a portion of a stent body used in one embodiment of the present invention;

[0017] FIG. **3** is a partial elevational view of a valve in accordance with one embodiment of the present invention;

[0018] FIG. **4** is an end view of the valve depicted in FIG. **3**;

[0019] FIG. **5** is a fragmentary, diagrammatic sectional view depicting portions of the valve of FIGS. **3** and **4** in an implanted condition, in conjunction with portions of the native tissue;

[0020] FIG. **6** is a view similar to FIG. **5** depicting the valve of FIGS. **3** and **4** in a different implanted condition;

[0021] FIG. **7** is a fragmentary, a diagrammatic elevational view of a portion a valve according to a further embodiment of the invention;

[0022] FIG. **8** is a fragmentary, diagrammatic perspective view depicting portions of a valve in accordance with yet another embodiment of the present the invention;

[0023] FIG. **9** is a diagrammatic perspective view of a valve according to another embodiment of the invention;

[0024] FIG. **10** is a diagrammatic perspective view of a valve according to a further embodiment of the invention;

[0025] FIG. **11** is a diagrammatic sectional view depicting portions of a valve according to yet another embodiment of the invention;

[0026] FIG. **12** is a fragmentary perspective view depicting elements of the valve depicted in FIG. **11**;

[0027] FIG. **13** is a diagrammatic perspective view of an element for use in a further embodiment of the present invention;

[0028] FIG. **14** is a diagrammatic end view of a structure used in yet another embodiment of the present invention;

[0029] FIG. **15** is a partially sectional view of a valve according to yet another embodiment of the present invention;

[0030] FIG. **16** is a view similar to FIG. **15** but depicting a valve according to a still further embodiment of the present invention;

[0031] FIG. **17** is a perspective view of a cuff for use in a valve according to a further embodiment of the present invention;

[0032] FIG. **18** is a perspective view of a valve incorporating the cuff of FIG. **17**;

[0033] FIG. **19** is a perspective view of another cuff for use in a valve according to yet another embodiment of the present invention;

[0034] FIG. **20** is a perspective view of a valve invention utilizing the cuff of FIG. **19**;

[0035] FIG. **21** is an fragmentary diagrammatic elevational view of a collapsed configuration of a valve in accordance with a further embodiment of the present invention;

[0036] FIG. **22** is a diagrammatic view of the valve of FIG. **21** in a different operating condition;

[0037] FIG. **23** is a partially sectional diagrammatic view of a valve according to another embodiment of the present invention;

[0038] FIG. **24** is a fragmentary schematic view of a valve according to another embodiment of the present invention;

[0039] FIG. **25** is a partial, elevational, schematic view of a valve according to a still further embodiment of the present invention;

[0040] FIG. **26** is a schematic view of the a valve according to an embodiment of the present invention in an implanted condition, in conjunction with native tissues;

[0041] FIG. **27** is a fragmentary, diagrammatic elevational, schematic view of a valve in accordance with yet another embodiment of the present invention;

[0042] FIG. **28** is a schematic view of the valve of FIG. **27** in an implanted condition, in conjunction with native tissue;

[0043] FIG. **29** is a fragmentary, diagrammatic elevational view of a valve according to a still further embodiment of the present invention;

[0044] FIG. **30** is a fragmentary schematic view of a portion of the valve of FIG. **30** in a different operating condition;

[0045] FIG. **31** is a schematic view of the valve of FIGS. **29** and **30** in an implanted condition, in conjunction with native tissue;

[0046] FIG. **32** is a view similar to FIG. **31** but depicting a valve according to a further embodiment of the present invention;

[0047] FIG. **33** is a fragmentary, diagrammatic sectional view depicting a valve according to yet another embodiment of the present invention; and

[0048] FIG. **34** is a partial, side, elevational view of a valve according to a further embodiment of the present invention.

DETAILED DESCRIPTION

[0049] FIG. **1** is a simplified view of the geometry or anatomy of the aortic root tissue in a typical human heart. The left ventricular outflow tract (LVOT) **1** communicates with the ascending aorta **5** through the annulus **2** of the native aortic valve and the Valsalva sinus **3**. The sinus joins the aorta at the sinotubular junction (STJ) **4**. The native aortic valve typically includes three native valve leaflets **6**, of which only two are visible in FIG. **1**. As the left ventricle contracts during systole, blood is forced from the LVOT **1** through the native valve and sinus and into the aorta **5**, moving generally in the downstream or antegrade flow direction indicated by arrow D. Each native valve leaflet has an interior surface **7** facing generally proximally and generally inwardly, toward the other native valve leaflets, and has an opposite-facing exterior surface **8**. In a healthy individual, the native valve leaflets **6** open away from one another and move to the position schematically shown in broken lines at **6'** to permit flow in this direction. During diastole, when the ventricle is not contracting, the native valve leaflets **6** move back to the position indicated in solid lines in FIG. **1**, where they abut one another or "coapt" so as to substantially block flow in the upstream or retrograde direction, opposite to arrow D. The direction "distal" as used herein with reference to a feature of the native circulatory system refers to the direction of antegrade flow, i.e., the predominant direction of blood flow through such feature, as indicated by arrow D. The direction "proximal" as used herein with reference to a feature of the native circulatory system is the opposite direction.

[0050] The parameters identified in FIG. **1** are as follows: DO=orifice diameter, i.e., the interior diameter of native annulus **2**; DA=the diameter of the aorta just distal to the sinus; DB=maximum projected sinus diameter (this sinus is sometimes known as the Valsalva sinus); LA=length of the sinus, i.e., the dimension in the distal direction from the annulus **2** to the sinotubular junction **4**; and LB=distance in the distal direction between DO and DB.

[0051] The leaflets **6** have distal edges **9** remote from the annulus **2**. Each native leaflet **6** has a surface **7**, referred to herein as the "interior" surface of the leaflet, facing generally towards the other leaflets. Each native leaflet **6** also has a surface **8**, referred to herein as the "exterior" surface of the leaflet, facing outwardly, away from the other leaflets and toward the wall of the sinus **3**. The cross sectional shape of such a native valve varies somewhat from individual to individual, and this variation can be increased by various types of disease. For example, disease can reshape the cross section of a patient's valve to a circular, triangular, or elliptical shape, depending on the disease state.

[0052] An expandable stent body **10** (FIG. **2**) for a prosthetic heart valve in accordance with one embodiment of the present invention is formed as a unitary structure as, for example, by laser cutting or etching a tube of a super elastic metal alloy such as a nickel-titanium alloy of the type sold under the designation NITINOL. Such a unitary structure can also be referred to as a "non-woven" structure, in that it is not formed by weaving or winding one or more filaments. In the fully-expanded, unconstrained configuration depicted in FIG. **2**, stent body **10** includes an annulus section **30**, an aorta section **20** and support struts **60** extending between the annulus section and the aorta section. The annulus section **30** in the expanded configuration is generally in the form of a cylindrical tube having a central axis **14**, whereas aorta section **20** is generally in the form of a hoop coaxial with the annulus section. In the expanded configuration, the annulus section is of substantially constant diameter except that the annulus section has a flared region **40** at one end. The tubular annulus section **30** has a wall formed by numerous cell struts interconnected to form a plurality of cells. The aorta section **20** is defined by a similar wall formed of multiple cells, each of which includes a plurality of interconnected cell struts.

[0053] The stent body is adapted for installation in the body of a patient with the annulus section adjacent the annulus **2** (FIG. **1**) and with the aorta section **20** adjacent the sinotubular junction **4** and aorta **5**. Thus, when the valve incorporating the stent body is placed in the patient, the aorta section **20** will be disposed distal to the annulus section **30** in the frame of reference of the patient's circulatory system. Accordingly, as used with reference to features of the stent body and valve, the direction D (FIG. **2**) along axis **14** from the flared region **40** of the annulus section **30** through the annulus section and from the annulus section towards the aorta section **20** is referred to as the distal direction, and the opposite direction is taken as the proximal direction. Stated another way, the distal direction along the stent body is the direction from the end of the stent which is intended for disposition at a proximal location in the frame of reference of the circulatory system to the end of the stent which is intended for disposition at a more distal location in the frame of reference of the circulatory system. The "axial" directions as referred to herein are the proximal and distal directions. Also, the outward direction as used with reference to the valve is the direction away from the proximal-to-distal axis **14**. As used with reference to features of the valve, the "circumferential" directions are the directions around axis **14**.

[0054] Stent body **10** include features which facilitate attachment of valve leaflets as discussed further below. In this particular stent body, the leaflet attachment features include three commissure posts **50** formed integrally with the remainder of the stent and extending axially in the annulus section **30**. The commissure posts are connected to the cell struts of the annulus section are and spaced equidistantly around the annulus section **30**.

[0055] The particular construction of stent body **10** that is shown in FIG. **2** (and subsequent figures) is only an example. Numerous other collapsible and expandable stent bodies can be used. Merely by way of example, the annulus region may include multiple rows of cells; leaflet attachment features other than the axially-extensive posts can be used; and the aorta section **20** and struts **60** may be omitted. As one example, FIG. **33** shows a stent variation with multiple rows of circumferentially collapsible/expandable cells in the annular valve section **30** of the stent body **10**. Referring to FIG. **34**, a few representative cells in the more distal or downstream row are numbered **32***a*, while a few representative cells in the more proximal or upstream row are numbered **32***b*, The locations of some of the cells that are otherwise obscured by cuff material in FIG. **34** are enhanced by the addition of dotted lines.

[0056] A valve **100** (FIG. **3**) incorporating a stent body **10** similar to that discussed above with reference to FIG. **2** shows includes three flexible prosthetic leaflets **70** formed from a biocompatible material such as an animal tissue as, for example, pericardial tissue or a synthetic polymeric material such as a silicone-polyurethane polymer. The leaflets are mounted to the stent body as, for example, by suturing the leaflets to posts **50**, so that when the valve and stent body are in an expanded condition as depicted in FIG. **3**, the leaflets are disposed in whole or in part within the annulus section **30** of the stent body.

[0057] The valve also includes a cuff **85**. The cuff includes a first cuff portion **80**, also referred to herein as a supra-annular cuff portion, extending over a region of the tubular wall of the annulus section **30** remote from the proximal end of the annulus section and distal to the flared region **40** of the annulus section. The cuff also includes a second portion, also referred to herein as the sub-annular cuff portion **90**, proximal to the first portion **80**. A line **110** is shown in FIG. **3** as a boundary between these two cuff portions for clarity of illustration. In actual practice, there may or may not be a visible demarcation between these portions. Line **110** is approximately at the bottom of commissure posts **50**. Stated another way, in this embodiment, the second cuff portion **90** is disposed proximal to the commissure posts and proximal to the prosthetic leaflets **70**. In the embodiment shown in FIG. **3**, both first cuff portion **80** and the second cuff portion **90** extend over the exterior surface of the stent body, i.e., the surface facing outwardly away from axis **14**. The second or sub-annular cuff portion **90** also includes a layer of material **120** (FIG. **4**) on the interior surface of the flared portion **40** of the stent. Thus, the second or sub-annular portion **90** of the cuff is thicker than the first or supra-annular portion **80**. A broken line **105** is shown in FIG. **4** for clarity of illustration at the juncture of inner layer **120** and the layer on the exterior surface, i.e., at the proximal edge of the stent body. In actual practice there may be no visible boundary at this location. In the particular embodiment depicted in FIG. **4**, the entire cuff **85** is formed from a unitary sheet of material. Layer **120** is integral with the cuff material on the exterior of the stent, and is formed by folding the unitary sheet around the proximal edge of the stent. The material on the interior and exterior of the stent may be sutured together.

[0058] This particular embodiment is only illustrative; in other arrangements, the cuff portions **80** and **90** may be formed as separate pieces of the same or different materials. Either or both cuff portions may include one or more layers on the inside of the stent body, one or more layers on the outside of the stent body, or both. The layers on the inside and outside of the cuff may be formed separately from one another or integrally with one another. The cuff desirably is attached to the stent as, for example, by suturing to the cell struts, to the junctures between the cell struts, or both. The cuff may be formed from materials such as animal tissues as, for example, porcine, ovine and bovine pericardium, porcine sub-mucosa, and synthetic fabrics such as knit or woven polyester, and non-woven fabrics. Collagen-impregnated fabrics may be used. Also, bio-absorbable materials such as polyglactin, copolymers of lactide and caprolactone, and polylactides can be used.

[0059] FIG. **4** shows valve **100** (FIG. **3**) as seen in axial view, looking distally from the proximal end of the valve. The three flexible leaflets **70** can be seen in FIG. **4** in their nearly closed condition (i.e., upper "free" edges of the leaflets coming together in approximately a Y pattern). The valve is preferably designed to close with fully redundant coaptation when under diastolic back-pressure.

[0060] In operation, the valve is brought to a collapsed condition and mounted on a delivery device (not shown) such as an elongated probe having a sheath adapted to retain the stent body in the collapsed condition. The delivery device may include a mechanical or other arrangement for releasing the stent body from the sheath once the valve has been advanced to the desired location within the body. For example, the delivery device may be arranged to move the sheath with respect to the stent body in response to a manipulation by the operator. In the collapsed condition, the stent body, including the annulus section **30** and aorta section **20** are radially compressed. The prosthetic valve leaflets **70** and folded within the stent body. Because the thick second or sub-annular portion **90** of the cuff is disposed proximal to the valve leaflets, it does not impede collapse of the valve to a relatively small diameter.

[0061] The delivery device is advanced into the patient's body until the valve is aligned with the native aortic valve, with the annulus section **30** adjacent the annulus of the aorta. The valve is released from the sheath and stent body **10** expands under its own resilience. The resilient expansion may occur solely as a result of release of mechanical constraint of the stent body, or may include expansion resulting from the effects of temperature change on the material of the stent body. In this embodiment, the entire expansion of the stent body from its collapsed condition to its expanded, operative condition is brought about by the stent body itself. Stated another way, the stent body desirably is fully self-expanding and does not require a balloon or mechanical movement device to bring about any part of the expansion. As best seen in FIG. **5**, the annulus section **30** brings the supra-annular or first section **80** of the cuff into engagement with engages the annulus **2** of the native aortic valve, and into engagement with the interior surfaces **7** of the native valve leaflets. Expansion of the annulus section **30**, and particularly expansion of the flared portion **40** brings the second or sub-annular section **90** of the cuff into engagement with the LVOT proximal to the annulus **2**. The cuff forms a seal with the native anatomy. Depending on the anatomy of the particular patient, the seal may be formed with one or more of the interior surfaces **7** of the native valve leaflets, the annulus and the LVOT. The aorta section **20** (FIG. **1**) engages the native anatomy at or near the sinotubular junction **4**.

[0062] Although the stent reaches an expanded configuration, it typically does not reach its fully-expanded, uncon-

strained configuration. Thus, the resilience of the stent body typically causes the aortic section **20** to bear on the sinotubular junction and also causes the annulus section **30** to bear on the annulus and on the interior surfaces of the leaflets, which helps to maintain the sealing engagement of the cuff with the native anatomy. The prosthetic valve leaflets **70** open to allow distal or antegrade flow of blood during systole, and close to block proximal or retrograde flow during diastole. The sealing engagement of the cuff with the native anatomy helps to block retrograde flow around the outside of the stent body, commonly referred to as perivalvular leakage. The valve does not block flow to the coronary arteries. For example, the support struts **60** may extend across the Valsalva sinus, so that blood can flow to the coronary arteries through spaces between the support struts.

[0063] FIG. **6** is similar to FIG. **5**, but shows the valve used in an alternative implantation procedure. In this procedure, the patient's native aortic valve leaflets have been resected (removed), typically prior to implanting prosthetic valve **100** in the patient as shown. In this embodiment as well, the first or supra-annular portion **80** of the cuff is engaged with the native valve annulus **2**, whereas the second cuff portion **90** is in contact with the native anatomy proximal to annulus **2**, i.e., with the distal end of the left ventricular outflow tract (LVOT).

[0064] The embodiment discussed above can be varied in many ways. For example, FIGS. **5** and **6** depict the cuff disposed only on the outside of the annulus region **30** and flare portion **40** of the stent body. However, the cuff may be disposed only on the inside or on both the inside and outside. Also, the stent body may not be entirely or even partially self-expanding. The stent body may be brought from its collapsed condition to an expanded, operative condition by one or more inflatable balloons or mechanical elements incorporated in the delivery device.

[0065] A valve according to a further embodiment includes a cuff **200** (FIG. **7**) formed extending around the exterior of the annulus section **202** of the stent. In the radially expanded condition of the stent body, the material of the cuff is pleated. In this embodiment as well, the stent is a radially collapsible structure, and may be similar to the stent body discussed above. For example, the annulus section may include numerous cells which cooperatively define a tubular wall, each such cell being formed from interconnected cell struts **204**. In the radially collapsed condition (not shown), the cell struts are oriented more nearly parallel to the proximal-to-distal axis **214** of the stent body. Thus, as the stent is transformed from the radially expanded condition depicted in FIG. **7** to the radially collapsed condition, the annulus section tends to elongate in the axial direction. In the reverse transition, from the radially collapsed condition to the radially expanded condition, the annulus region decreases in axial length as it increases in diameter. The pleats in the cuff define a plurality of valley regions **203** and ridge regions **205** extending generally in the circumferential direction. As the stent decreases in axial length during transition to the radially expanded condition, the adjacent valley regions move toward one another. This facilitates radial expansion of the ridge regions. Optionally, the cuff may be attached to the stent body only in the valley regions. The pleats may or may not be present in the radially collapsed condition of the stent body. Stated another way, the axial extension of the stent body during radial collapse may collapse ridge regions **205** inwardly to the same diameter as the valley regions **203**. In the radially expanded condition of the stent body, the pleats help to form an effective seal with the native tissue. Pleated cuffs according to this embodiment may be formed from the cuff materials discussed above. The pleats need not be exactly circumferential. For example, there may be one or more helical valley region and one or more helical ridge region, so that the valley and ridge regions cooperatively define a form generally like a screw thread.

[0066] The valve of FIG. **7** also includes biasing elements in the form of bands **210** of hygroscopic, sponge-like material that collapses easily and fills to a larger volume when the stent is expanded after implantation. Merely by way of example, the hygroscopic material may be a collagen foam or sponge similar to the material commercially available under the trademark Angioseal which is used to plug arteries, and to the similar material currently used for embolic protection. The biasing elements or bands **210** are formed separately from the cuff and are engaged between the ridge regions **205** of the cuff and the exterior surface of the annulus portion **203** of the stent. Thus, the biasing elements are mechanically engaged with the cuff and stent body. When the valve is implanted and the material of bands **210** swells, the biasing elements urge the ridge regions of the cuff outwardly with respect to the annulus region **202** of the stent body. In the embodiment of FIG. **7**, the bands of hygroscopic material are disposed proximal to the prosthetic valve leaflets **271**, and hence are axially offset from the leaflets. This facilitates collapse of the valve to a small diameter. In a valve according to yet another embodiment (FIG. **8**), the biasing element includes a helical band **211** of hygroscopic material disposed inside the cuff **201**.

[0067] Biasing elements such as hygroscopic material can be used with cuffs other than the pleated cuffs shown in FIGS. **7** and **8**. Bands of hygroscopic material can be integrated into the valve to take advantage of specific geometry in order to increase the sealing ability thereof, while not compromising (i.e., unduly increasing) the collapsed valve diameter. For example, in a valve which includes a cuff having a sub-annular portion as discussed above with reference to FIGS. **3** and **4**, the biasing element can be located to expand the sub-annular cuff portion (i.e., on the upstream side of the patient's native valve annulus). Here again, because the biasing element is axially offset from the prosthetic valve elements, it does not add to the cross section of the prosthetic valve where the leaflets are when the valve is collapsed. In the collapsed condition, the bulk of the biasing element is not superimposed on the bulk of the leaflets. This helps make it possible to collapse the valve to a smaller circumferential size than would be possible if both the leaflets and biasing element were in the same cross sectional area of the valve.

[0068] In a further variant, a biasing element such as a water-absorbing polymer may be placed between layers of cuff material, so that the biasing element will urge the outer layer away from the stent body. In a further embodiment, the cuff material may be impregnated with such a polymer. When allowed to expand as a result of implantation in a patient and consequent absorption of water from the patient's tissue and/or blood, these materials can fill any gaps in the cuff material and can also fill gaps between the cuff material and the native tissue to reduce PV leakage.

[0069] Staples and/or sutures can be used to secure the valve to the patient's native valve annulus using elongated instruments introduced trans-apically or percutaneously. The valve depicted in FIG. **9** has a stent body which has an annulus section **30** similar to the annulus section of the valve dis-

cussed above with reference to FIGS. **2-4**. This particular valve body does not have an aortic section as used in the valve body of FIGS. **2-4**. The annulus section **30** has a flared portion (not shown) at its proximal end, i.e., at the bottom of the drawing as seen in FIG. **9**. In this embodiment as well, the cuff includes a second or sub-annular cuff portion **90**. Cuff portion **90** can be sutured or stapled to the patient's native tissue because the bases or proximal edges of the prosthetic valve leaflets **70** are downstream from cuff portion **90**. Dotted lines **72** in FIG. **9** indicate the approximate locations of the leaflet bases. Areas **92** of the second cuff portion **90** are thus available for stapling or suturing through cuff **90** into the patient's native tissue without interfering with prosthetic leaflets **70**.

[0070] The valve of FIG. **10** includes a cuff **285** defining multiple pockets **220**. Each cuff has an open side **221** facing in the distal direction. The other sides of each cuff are substantially closed. When the valve is implanted, these pockets will impede perivalvular leakage or retrograde blood flow around the outside of the stent body. Retrograde flow will tend to fill each pocket with blood and thus bias the outer surface of the pocket outwardly, into engagement with the native tissue as, for example, into engagement with the annulus or native valve leaflets. Stated another way, the pockets acting like miniature parachutes around the periphery of the valve. It is expected that pockets **220** will eventually have tissue ingrowth to eliminate the long-term need for their PV leak prevention function. In FIG. **10** the mini-pockets **220** of the cuff are constructed to impede retrograde flow. It will be appreciated, however, that the pockets can be oriented in the opposite direction (i.e., to prevent forward blood flow), with their open sides facing generally proximally. The pockets can be provided in any number, size, and/or shape to minimize leakage. Pockets **220** can be made of the same cuff materials as discussed above.

[0071] A valve according to a further embodiment of the invention (FIG. **11**) incorporates biasing elements in the form of springs **230** formed integrally with the stent body. In the expanded condition of the stent body, portions of the springs project outwardly from the tubular wall of the annulus section **30**. The cuff, or the outermost layer of the cuff, is disposed outward of the tubular wall and outward of the springs, so that the springs tend to bias the cuff **85** outwardly with respect to the wall of the annulus section. Biasing elements of this type can be provided at any location along the cuff. The springs **230** may be axially-extensive fingers as depicted in FIG. **12**, or may have other configurations. For example, springs in the form of fingers may be directed generally circumferentially. The fingers may have blunt ends for engagement with the cuff, as depicted at **230***c* and **230***d* in FIG. **12**. Alternatively, the fingers may have sharp ends as depicted in FIGS. **12** at **230***a* and **230***b*. Fingers with sharp ends may pierce the cuff and also may pierce the native tissue.

[0072] The biasing elements may also include coil springs. As shown in FIG. **13** a conical coil spring **250** has a spring axis **251** and a spring member such disposed in a helix around the spring axis so that the spring member defines a plurality of turns of progressively increasing diameter. The largest turn **253** defines a base surface of the spring. A plurality of such springs can be mounted between the stent body and the cuff, with base surface facing inwardly toward the stent body, and with the spring axis extending generally in a radial or outward direction. Here again, the spring will tend to bias the cuff outwardly with respect to the stent body. Where the stent includes cells formed from cell struts, the base surface of each spring may bear on a juncture between struts. Also, where the stent includes commissure posts such as the posts **50** depicted in FIG. **2**, the springs may bear on the commissure posts. In a further arrangement, springs may be provided between layers of a multi-layer cuff. Each spring **250** can be cut from a flat sheet in a coil (spiral) pattern and shaped into a cone. The material can be a shape-memory/super-elastic material such as Nitinol. Depending on the size of the base of the spring, each turn of the spiral could even be saddle-shaped to enable the spring to conform to the curvature of the portion of the stent that the spring is sitting on (FIG. **14**).

[0073] In a further embodiment (FIG. **14**), the turns **251** are generally elliptical as seen in end view, looking along the spring axis **250**. Also, in this embodiment, the base surface defined by the largest turn **253** is curved around an axis **257** transverse to the spring axis **250**. Thus, portions **255** of turn **253** remote from axis **257** project in directions parallel to the spring axis **250**, out of the plane of the drawing, toward the viewer as seen in FIG. **13**. The other turns desirably have a similar curvature. Thus, when the spring is fully collapsed, it has the shape of a portion of a cylinder, with axis **257** being the axis of the cylinder. A spring according to this embodiment may be mounted to the stent body, with the transverse axis **257** oriented generally parallel to the axis of the cylindrical surface, and desirably coaxial with such cylindrical surface. Stated another way, the spring in its collapsed or compressed condition may match the curvature of the stent body in its radially collapsed condition. This design has the ability of being low-profile, with minimum radial extent when collapsed and the ability to push radially outwardly when deployed.

[0074] Coil springs as shown in FIGS. **13** and **14** can be cut from a flat sheet, and then heat set or formed on mandrels to make them obtain the characteristics of a spring. They can be attached by means of sutures, welds, locking mechanisms, etc. to the stent body or placed within the appropriate cuff portion. The coil springs also may be formed integrally with the stent body.

[0075] A valve according to yet another embodiment of the invention includes a cuff **85** similar to the cuffs discussed above. However, in this embodiment, the cuff is provided with a thin ring **260** formed from a resilient material such as silicone rubber. Ring **260** extends circumferentially around the remainder of the cuff and around the annulus section **30** of the stent body. The ring has a main portion **261** bearing on the stent body through the other layers of the cuff, and has a free edge **262** axially offset from the main portion. When the stent body is in its radially collapsed condition, the free edge of the ring lies flat against the other structures of the stent. When the internal diameter of the ring is forcibly expanded by transition of the annulus section **30** of the stent body from a the free edge **262** of the ring tends to flip up and thus tends to project outwardly relative to the main portion **261** and relative to the stent body. This causes the free edge **261** of the ring to seal against the surrounding native tissue, even where the native tissue is irregular. The ring has a low enough profile to be collapsed during delivery of the prosthetic valve into the patient. The ring can be placed anywhere along the axial extent of the annulus section. If it is axially offset from the prosthetic valve leaflets **70**, as by placing it in the area of the second sub-annular cuff portion **90** this will minimize the material of the valve in the cross section of the leaflets.

[0076] A ring such as that discussed above with reference to FIG. **15** also can be used as a biasing element, so as to bias

another portion of the cuff outwardly with respect to the stent body. For example, in the embodiment of FIG. **16**, a ring **260** similar to that discussed above is disposed between the stent body and an overlying portion **270** of cuff material. The free edge of the ring bears on this portion **270** and urges it outwardly with respect to the stent body. The cuff bulge shown in FIG. **16** is thus caused by the free edge of the silicone ring flipping up.

[0077] Because the features as discussed above with reference to FIGS. **7-16** provide an outward bias to portions of the cuff, they tend to promote effective sealing between the cuff and the surrounding native tissue even where the native tissue is irregular. While these features have been discussed above in connection with an expansible stent body, they can be used with other types of stents. For example, a valve intended for implantation in an open surgical technique may include a non-expandable, substantially rigid stent. The biasing features may be employed with stents of this type as well.

[0078] The calcific patterns of aortic stenosis can occur in a variety of distribution patterns, which can have a direct effect on PV leak between the stenotic leaflets and an implanted collapsible valve. In many cases, PV leak is most likely to occur at the location of the commissures between the stenotic native leaflets (R. Zegdi et al., "Is It Reasonable to Treat All Calcified Stenotic Aortic Valves With a Valved Stent?", Valvular Heart Disease, Vol. 51, No. 5, pp. 579-84, Feb. 5, 2008). Stated another way, the native valve annulus, and the space defined by the interior surfaces of the native valve leaflets, do not have circular cross-sectional shape. A valve according to a further embodiment includes a cuff **285** (FIG. **17**) which includes a plurality of regions **280** distributed around the circumference of the cuff. In the operative, implanted configuration shown, some of these regions **280***a*, **280***b* and **280***c*, referred to herein as "bulge" regions, have radial thickness R greater than the radial thickness of other regions, such as regions **280***d*, **280***e* and **280***f*, referred to herein as "intermediate" regions. In the particular example of FIGS. **17** and **18**, there are three bulge regions spaced circumferentially from one another and intermediate regions between the bulge regions. In another example, there are two bulge regions **280***a* and **280***b* spaced from one another and intermediate regions such as **280***e* and **280***d* between the bulge regions. The number and location of the bulge regions desirably is selected to match the configuration of the native tissue of the particular patient. Therefore, in order to tailor the valve cuff specifically to a particular patient, each region **280** incorporates a separate chamber **287**, (FIG. **18**). Each chamber can be inflated to provide a bulge region or left deflated to provide an intermediate region. This arrangement can provide sufficient sealing against PV leak without adding additional, unnecessary cuff material. The configuration of FIGS. **17** and **18** can be used, for example, in a patient having a typical tricuspid native aortic valve with stenotic native leaflets. The configuration of FIGS. **19** and **20** can be used in a patient having a stenotic bicuspid native aortic valve.

[0079] The chambers can be inflated either before implantation or after the valve has been expanded into the stenotic native valve. Inflation can be achieved intra-procedurally with material such as liquid collagen or RTV silicone, or prior to the procedure with similar or other materials. This cuff construction offers the potential for a single collapsible valve design to be used in a variety of stenotic aortic valve sizes and calcific distribution patterns, whereas some of the previously known designs can only be used with uniform calcific distribution patterns. This cuff design may also be used in aortic insufficient (leaking) valves because of its ability to fill PV-leaks and gaps. Other possible uses of this cuff design are in other valve positions. For example, a configuration such as that shown in FIGS. **19** and **20** may be particularly well suited for the mitral valve, which is naturally elliptical and often insufficient (leaking).

[0080] As further discussed below, certain techniques which can be employed in prosthetic heart valve procedures may best be applied while the regions treated by these techniques are temporarily isolated from direct blood flow. A device that isolates a working chamber may be beneficial. One such device is disclosed in R. Quaden et al., "Percutaneous Aortic Valve Replacement: Resection Before Implantation," European Journal of Cardio-thoracic Surgery, Vol. 27, 2005, pp. 836-40, the disclosure of which is hereby incorporated by reference herein. As disclosed in the Quaden et al. article, an aortic valve resection chamber is sealed by polyethylene balloons. The surgical instruments are inserted through an instrument channel. Two catheters with small sealing balloons provide the coronaries with cardioplegia and prevent coronary embolization during the resection process. A working chamber of this type may also be beneficial (although not necessary in all cases) for application of some techniques such as those described later in this specification.

[0081] Lasers have long been used to coagulate tissue in the medical industry. An example is the Laserscope system used for cauterizing tissue (available from Laserscope, 3052 Orchard Drive, San Jose, Calif. 95134-2011). A low power laser that can minimize tissue vaporization, yet bond tissue together, is optimal. Other energy sources such as ultrasound, cryogenics, an electrical resistance or other heating element can be used as alternatives. The cuff of a prosthetic valve can be made to be bonded to native tissue as, for example, to the stenotic leaflets (or to the native valve annulus if leaflets are resected) during or after implantation. For example, a porcine pericardial strip on the outside of the cuff can be used to bond a tissue-to-tissue joint. Probes of various shapes (toroid, pointed, etc.) can be used to directionally apply the energy to the desired locations.

[0082] Biocompatible adhesives, such as epoxy amines, have been applied in certain medical applications. (See, for example, U.S. Pat. Nos. 6,780,510 and 6,468,660.) Such adhesives can be applied around the perimeter of the cuff of a prosthetic valve to bond to stenotic leaflets (or annulus if leaflets are resected) during or after implantation. Other silicone materials can be used as a "caulk" in certain situations. The adhesive can be injected internally or externally through ports in the valve cuff itself and/or the cuff can have pockets to allow for injection (see FIGS. **10**, **12**, and **16**.

[0083] A valve according to a further embodiment of the invention (FIG. **21**) includes an expandable stent body **10** having an annulus section **30** with a proximal-to-distal axis **14**. The valve also includes a cuff **400** having a generally tubular wall with a free end **402** and with surfaces **403** and **404**. In the collapsed condition shown, surface **403** is the inner surface of the tube and surface **404** is the outer surface. In the radially collapsed condition of the stent body **10**, the tubular wall projects from the proximal end of the stent so that the free end **402** of the tubular wall is proximal to the annulus section **30**. Stated another way, in this condition, the free end **402** of the tubular wall is axially offset from the annulus section and is axially offset from the stent body. Thus FIG. **21** shows crimped or collapsed stent **30** and crimped or collapsed

cuff **400** at different, substantially non-overlapping locations along the proximal-to-distal axis of the valve. Elements **30** and **400** may be connected to one another, e.g., at an interface between them. But they preferably do not overlap, at least not to a great extent. Thus, in this condition the thickness of the tubular wall **400** does not adding to the diameter of the stent. This is desirable for keeping the outer diameter, and hence the circumferential size of the valve as small as possible for less invasive delivery into the patient.

[0084] FIG. **22** shows the structure of FIG. **21** when implanted in the patient. In particular, FIG. **22** shows annulus section **30** in a radially expanded condition. Cuff **400** is also radially expanded and has been flipped up or turned inside-out (everted) so that it is now disposed around the outside of at least a portion of the annulus section **30** of the stent body. Note that surface **403** is now on the outside of the tube. In conversion from the collapsed condition to the operative condition, the free end **402** of the tube moves with respect to the stent body. Accordingly, the free end **402** is referred to herein as a "mobile" portion of the cuff. In the operative condition depicted in FIG. **22**, the free end or mobile portion is axially aligned with part of the annulus section **30**. In this condition cuff **400** helps ensure proper sealing of the valve to the patient's surrounding native tissue.

[0085] Tubular cuff **400** can be flipped up during delivery of the valve into the patient but before the valve is fully seated at the valve implant site in the patient. Depending upon the resilient properties of the tubular cuff **400**, radial expansion of the stent body may cause the tubular cuff to evert as shown. Alternatively or additionally, the tubular cuff may have a free or undistorted shape such that it naturally tends to evert as shown in FIG. **22** when unconstrained. The tubular cuff may be forcibly distorted to the condition depicted in FIG. **21**, and constrained in that position by a sheath or other element of a delivery device. Thus, as shown in FIG. **23**, after cuff **400** has emerged from the distal end of a delivery sheath **500**, the cuff tends to resiliently flip up around the outside of stent body **10**. FIG. **24** shows an alternative or addition in which sutures or wires **510** are used to pull the mobile element or end **402** of cuff **400** up and around the outside of stent body **10**. This movement may be preformed before, during, or after expansion of the stent body. Merely by way of example, where the delivery device includes an elongated probe, the sutures or wires **510** may extend along the delivery device to a handle or other element accessible to the operator. Also, the sutures may be provided as loops which can be removed from the cuff by selectively pulling one end of the loop. For example, sutures **510***a* and **510***b* are parts of a unitary loop extending through holes in the cuff. Pulling both ends of the loop simultaneously tends to pull the free edge or mobile portion **402**. Pulling one end of the loop will remove the suture from the cuff. FIG. **25** shows still another alternative or addition in which shape-memory alloy (e.g., nitinol) members **410** in or on cuff **400** cause the cuff to flip up when the cuff is released from delivery system constraint inside the patient at or near the valve implant site.

[0086] A cuff with a mobile portion may be arranged to form a seal with any portion of the native anatomy. For example, FIG. **26** shows a prosthetic valve **10** fully implanted in a patient, with cuff **400** flipped up around the outside of stent body **10** and pressed radially outwardly against the patient's native, stenotic, heart valve leaflets **6** to seal the prosthetic valve against PV leak.

[0087] FIG. **27** is generally like FIG. **21**, but in FIG. **27**, cuff **400** is longer than in FIG. **21**. FIG. **28** is generally like FIG. **23**, but shows the FIG. **28** structure after it has been implanted in a patient. In the structure of FIGS. **27** and **28**, cuff **400** has an axial extent that is about the same as the axial extent of the annulus portion **20** of the stent body. In this embodiment, the proximal end of the stent may be disposed proximal to the native valve annulus **2**, and yet a portion of cuff **400** will still reach and seal against native structures such as annulus **2** and stenotic leaflets **6**. The structure of FIGS. **27** and **28** incorporates a balloon **601** disposed on the delivery device inside the stent body, such as within the annulus region **30** of the stent body, for forcibly expanding the stent body. This structure also includes a further balloon **603** which is disposed within the cuff when the stent is in the radially collapsed condition. The cuff **400** can be turned inside-out by inflating balloon **603** before or during expansion of the stent body. In further variants, the balloon may be arranged to expand progressively, beginning at the free end **402**, to help turn the stent inside out. Merely by way of example, balloon **603** may include a plurality of chambers disposed along the axis of the structure, so that these balloons can be inflated in sequence.

[0088] In other embodiments, the mobile portion of the cuff may be moved relative to the stent body by engagement with native anatomical structures. For example, the cuff can be constructed and delivered so that it latches on the patient's native stenotic heart valve leaflets during delivery. FIGS. **29-31** show one examples of this action. The valve of FIG. **30** is generally similar to the valves of FIGS. **22** and **28**, but shows the addition of engagement elements in the form of hooks **420** on the free end **402** of cuff **400** remote from stent **30**. FIG. **30** shows the structure of FIG. **29** in a stage of deployment. In this stage, the tubular cuff has deformed to a configuration where the latch members or hooks **420** they can engage (latch onto) the distal edges of the patient's native stenotic leaflets **6**. Once the latch members have been engaged, the stent body is moved in the proximal direction relative to the native anatomy. As shown in FIG. **31**, the proximal movement of stent body **10** into the space bounded by native leaflets **6** causes cuff **400** to evert around the outside of stent **10**. This is aided by the fact that hooks **420** secure the free end of **402** cuff **400** to the distal edges of leaflets **6**. Ultimately (as shown in FIG. **31**), cuff **400** is sandwiched between stent body **10** and native leaflets **6**. The presence of hooks **420** over native leaflets **6** helps cuff **400** seal the prosthetic valve against PV leak, and also helps to anchor the valve in place in the patient.

[0089] The engagement elements or hooks **420** can be of any suitable material. One possibility is for hooks **420** to be made of nitinol and to extend through the fabric or other material of cuff **400**. Hooks **420** may be connected to the annulus section **30** or other portions of the stent body, and may be formed integrally with the stent body.

[0090] In the procedure of FIGS. **29-31**, the mobile element is moved during proximal movement of the valve, from the aorta **5** towards the left ventricle **1**. In a further variant, the mobile element is deployed by movement in the opposite, distal direction relative to the native anatomy. In such a case, hooks **420'** can be arranged to latch into annulus **2** as shown in FIG. **32**. In this arrangement, the tubular cuff element initially projects from the distal end of the annulus section **30**. The latch members **420'** engage native anatomical structures such as the LVOT. The free end or mobile element moves proxi-

mally with respect to the annulus section **30** of the stent body as the stent body moves distally relative to the native anatomy.

[0091] The mobile portion of the cuff may include the entire cuff or any part of the cuff. Also, motion of the mobile portion of the cuff can occur in ways other than turning the cuff inside out. For example, the structure of FIG. **33** incorporates a cuff **400** and a stent body **10** having an annulus region **30**. During advancement of the valve into the patient, the stent is constrained in its radially collapsed condition by a sheath **605**. The cuff **400** includes a resilient tube having an unconstrained internal diameter approximately equal to, or greater than the external diameter of the annulus region **30** in its radially collapsed condition. During advancement into the patient, the cuff is retained in a collapsed condition by a further sheath **607** separate from sheath **605**. During deployment, sheath **607** is moved in axial direction A**1** relative to the sheath, so as to free at least the part of cuff **400** closest to the stent body and allow it to expand. While moving sheath **605** axially in direction A**2** relative to the stent body, the cuff is also moved axially relative to the stent body before the stent body expands fully to its operative, radially expanded state. For example, the delivery device may include sutures **510** similar to those discussed above with reference to FIG. **24** for moving the cuff. As the stent body expands, it engages the inside of the cuff. Where the stent body is forcibly expanded by a balloon or mechanical element, the cuff can be slipped over the exterior of the stent body so as to pull the cuff around the outside of the stent body before or during operation of the expansion device.

[0092] Although the valves have been discussed above with reference to implantation of the valves in naturally-occuring native valves of a patient, the valves also can be implanted within previously-implanted prosthetic valves. In such a procedure, the previously-implanted prosthetic valve constitutes the native valve. For example, the cuff will seal against structures of the previously-implanted prosthetic valve as, for example, against the interior of the previously-implanted stent body and cuff, or the interior surfaces of previously-implanted prosthetic valve leaflets.

[0093] Although the invention herein has been described with reference to particular embodiments, it is to be understood that these embodiments are merely illustrative of the principles and applications of the present invention. It is therefore to be understood that numerous modifications may be made to the illustrative embodiments and that other arrangements may be devised without departing from the spirit and scope of the present invention as defined by the appended claims.

1. A prosthetic heart valve for replacement of a native heart valve having a native valve annulus comprising:

(a) a stent body including a generally tubular annulus region having a proximal-to-distal axis and having a radially collapsed condition a radially expanded condition, the annulus region increasing in diameter during transition from the radially collapsed condition to the radially expanded condition;

(b) one or more prosthetic valve elements mounted to the stent body and operative to allow flow in the proximal direction through the annulus region but to substantially block flow in the proximal direction through the annulus region; and

(c) a cuff secured to the stent body, the cuff comprising

(i) a first cuff portion covering at least a portion of the annulus region for disposition at said native valve annulus, the first cuff portion having a first diameter when the annulus region is in the radially expanded condition and

(ii) a second cuff portion proximal to the first cuff portion, the second cuff portion having a second diameter when the annulus region is in the radially expanded condition, the second diameter being greater than the first diameter, the second cuff portion being adapted for engagement with native tissue proximal to the native valve annulus.

2. A valve as claimed in claim **1** wherein the stent body includes a flare section proximal to the annulus region, the flare section having a greater diameter than the annulus region when the stent body is in the expanded configuration, at least a part of the second cuff portion extending along the flare section of the stent body.

3. A prosthetic heart valve comprising:

(a) a stent body including a generally tubular annulus region having a proximal-to-distal axis and having a radially collapsed condition a radially expanded condition, the annulus region increasing in diameter and decreasing in axial length during transition from the radially collapsed condition to the radially expanded condition;

(b) one or more prosthetic valve elements mounted to the stent body and operative to allow flow in the proximal direction through the annulus region but to substantially block flow in the proximal direction through the annulus region; and

(c) a cuff secured to the stent body and surrounding the annulus region, the cuff having one or more pleats adapted to collapse in axial directions and expand in radial directions upon transition of the stent body from the radially collapsed condition to the radially expanded condition.

4. A prosthetic heart valve comprising:

(a) a stent body including a generally tubular annulus region having a proximal-to-distal axis;

(b) one or more prosthetic valve elements mounted to the stent body and operative to allow flow in the proximal direction through the annulus region but to substantially block flow in the proximal direction through the annulus region; and

(c) a cuff secured to the stent body and surrounding the annulus region; and

(d) one or more biasing elements separate from the cuff mechanically connected to the stent body and to the cuff, the one or more biasing elements being adapted to bias at least a portion of the cuff outwardly with respect to the stent body.

5. A valve as claimed in claim **6** wherein the stent body is an expandable metallic stent body having a radially collapsed condition a radially expanded condition, the annulus region increasing in diameter during transition from the radially collapsed condition to the radially expanded condition.

6. A valve as claimed in claim **5** wherein the one or more biasing elements include one or more springs.

7. A valve as claimed in claim **6** wherein the springs are formed integrally with the stent body.

8. A valve as claimed in claim **6** wherein the springs include a plurality of coil springs, each of the coil springs having a spring axis and an elongated member extending in a plurality of turns around the spring axis.

9. A valve as claimed in claim **8** wherein the turns of each spring are curved about an axis transverse to the spring axis and parallel to the proximal-to-distal axis of the stent body.

10. A valve as claimed in claim **5** wherein the one or more biasing elements include a hygroscopic material.

11. A valve as claimed in claim **10** wherein the one or more valve elements include a plurality of prosthetic valve leaflets disposed at least partially within the annulus region and the hygroscopic material is offset in the proximal or distal direction from the valve leaflets at least when the stent body is in the radially collapsed condition.

12. A valve as claimed in claim **10** wherein the hygroscopic material includes a helical hygroscopic element extending around the annulus region.

13. A valve as claimed in claim **5** wherein the one or more biasing elements include a resilient ring extending circumferentially around the annulus region, the ring having a main portion bearing on the stent body and a free edge unattached to the stent body, the ring being constructed and arranged so that upon radial expansion of the ring, the ring deforms and such deformation biases the free edge outwardly with respect to the main portion and the stent body.

14. A prosthetic heart valve comprising:

(a) a stent body including a generally tubular annulus region having a proximal-to-distal axis and having a radially collapsed condition a radially expanded condition, the annulus region increasing in diameter during transition from the radially collapsed condition to the radially expanded condition;

(b) one or more prosthetic valve elements mounted to the stent body and operative to allow flow in the proximal direction through the annulus region but to substantially block flow in the proximal direction through the annulus region; and

(c) a cuff secured to the stent body extending around the annulus region, the cuff including a ring extending circumferentially around the stent body, the ring having a main portion bearing on the stent body and a free edge unattached to the stent body, the ring being constructed and arranged so that upon radial expansion of the ring, the ring deforms and such deformation biases the free edge outwardly with respect to the main portion and the stent body.

15. A prosthetic heart valve comprising:

(a) a stent body including a generally tubular annulus region having a proximal-to-distal axis and having a radially collapsed condition a radially expanded condition, the annulus region increasing in diameter during transition from the radially collapsed condition to the radially expanded condition;

(b) one or more prosthetic valve elements mounted to the stent body and operative to allow flow in the proximal direction through the annulus region but to substantially block flow in the proximal direction through the annulus region; and

(c) a cuff secured to the stent body, the cuff having a mobile portion movable in an axial direction with respect to the stent body so that when the stent body is in the radially collapsed condition, the mobile portion of the cuff is axially offset from the annulus region of the stent body and the mobile portion of the cuff can be displaced to an operative position in which the mobile portion of the cuff extends around the annulus section.

16. A valve as claimed in claim **15** wherein the cuff has a generally tubular wall with a fixed end attached to stent body and a free end projecting axially away from the annulus section when the stent body is in the radially collapsed condition, the mobile portion of the cuff including the free end of the tubular wall, the tubular wall being constructed and arranged so that the tubular wall may be turned inside-out so as to bring the free end of the tubular wall into the operative position, the free end of the tubular wall extending around the annulus region when the cuff is in the operative position.

17. A valve as claimed in claim **16** wherein the cuff is constructed and arranged to turn inside-out so as to bring the free end of the tubular wall into the operative position at least in part in response to transition of the annulus region from the radially collapsed condition to the radially expanded condition.

18. A valve as claimed in claim **16** further comprising cuff engagement elements connected to the free end of the cuff, the cuff engagement elements being constructed and arranged to engage one or more features of the native anatomy so that the cuff may be turned inside out at least in part by axial movement of the stent body relative to the engaged features of the native anatomy.

19. A valve as claimed in claim **18** wherein the free end of the cuff projects proximally from the annulus region of the stent body and wherein the engagement features are adapted to engage native valve leaflets.

20. A prosthetic heart valve comprising:

(a) a stent body including a generally tubular annulus region having a proximal-to-distal axis;

(b) one or more prosthetic valve elements mounted to the stent body and operative to allow flow in the proximal direction through the annulus region but to substantially block flow in the proximal direction through the annulus region; and

(c) a cuff defining one or more pockets outside of the annulus region, each such pocket having an outer wall, an open side facing in a first axial direction and having a closed side facing in a second axial direction opposite to the first axial direction so that flow of blood in the second axial direction will tend to force blood into the pocket and bias the outer of the pocket outwardly relative to the stent body.

21. A valve as claimed in claim **20** wherein one or more pockets include a plurality of pockets having open sides facing in the distal direction.

22. A prosthetic heart valve comprising:

(a) a stent body including a generally tubular annulus region having a proximal-to-distal axis;

(b) one or more prosthetic valve elements mounted to the stent body and operative to allow flow in the proximal direction through the annulus region but to substantially block flow in the proximal direction through the annulus region; and

(c) a cuff extending around the annulus region, the cuff having a plurality of regions spaced circumferentially from one another, each region having a radial thickness, the radial thicknesses of at least one of the regions being different from the radial thickness of at least one other one of the regions when the cuff is in an operative configuration.

23. A valve as claimed in claim **22** wherein at least some of the regions include hollow chambers so that the cuff may be brought to the operative configuration by inflating the hollow chambers.

24. A valve as claimed in claim **23** wherein the hollow chambers are constructed and arranged so that one or more of the hollow chambers can be inflated independently of one or more other ones of the hollow chambers.

25. A valve as claimed in claim **22** wherein the plurality of regions includes three bulge regions circumferentially spaced from one another and intermediate regions disposed between the bulge regions, the bulge regions having greater radial thickness than the intermediate regions.

26. A valve as claimed in claim **22** wherein the plurality, of regions includes two bulge regions circumferentially spaced from one another and intermediate regions disposed between the bulge regions, the bulge regions having greater radial thickness than the intermediate regions.

27. A valve as claimed in any of the preceding claims in which said one or more valve elements include a plurality of flexible prosthetic valve leaflets disposed at least partially within said annulus region.

28. A method of treating a patient comprising the steps of:

(a) inserting a prosthetic valve including a stent body, one or more prosthetic valve elements connected to the stent body and a cuff extending over at least a portion of the stent body into the patient while the stent body and cuff are in a radially collapsed condition;

(b) bringing the stent body and cuff to a radially expanded condition and positioning the stent body and cuff so that a first portion of the cuff engages a native valve annulus and a second portion of the cuff engages native tissue adjacent the annulus; and

(c) affixing the second portion of the cuff to the native tissue.

29. The method of claim **28** wherein said second portion of said cuff is affixed to said native tissue by means of sutures or staples.

30. The method of claim **28** wherein said affixing step include applying energy to said second portion of said cuff to form a bond with the native tissue.

31. The method of claim **28** wherein the native valve annulus is the annulus of the native aortic valve and wherein the second portion of the cuff engages the native left ventricular outlet tract.

32. A kit for performing a method as claimed in any of claims **38-31** including (i) a prosthetic valve including a stent body, one or more prosthetic valve elements connected to the stent body and a cuff extending over at least a portion of the stent body; and (ii) at least one affixing tool adapted to affix the cuff to native tissue.

* * * * *