Fabrics

Frank K. Ko
Fibrous Materials Laboratory, Department of Materials Science and Engineering, Drexel University, Philadelphia, Pennsylvania, U.S.A.

F

INTRODUCTION

Fabrics are fibrous structures manufactured by the interlacing, interlooping, intertwining, or direct bonding of oriented or random, discrete or continuous, fibers into 2-D or 3-D textile assemblies. Textile surgical implants are fibrous structures placed into the human body for a period of time to perform a specific clinical function. Surgical implants can be classified according to their end uses or by their functions. Based on the location of use in the body, surgical implants can be categorized as cardiovascular and thoracic implants, orthopaedic implants, or implants for plastic and constructive surgery. The functions of these implants can include replacement of parts of the anatomy, such as hip and joints; simulation of a congenitally absent portion of the anatomy, such as facial prostheses; correction of congenital, traumatic, or pathological deformity (spinal plates); and rectifying an organ's mode of operation (pacemaker), as well as therapeutic functions and drug delivery.

In this article, the wealth of fiber architecture in fabric forms and their characteristics, which are critical for the selection and design of implants for surgery, are introduced. A review of the basic components of fabrics and the various classes of fabric structures is provided. The characteristics of the various fabrics are illustrated in performance maps, and potential applications of fabrics for tissue engineering scaffolds are illustrated.

OVERVIEW

Even though the use of surgical implants dates back to ancient Egyptian days, the modern use of surgical implants did not begin until the 19th century. The use of textile- and fabric-based surgical implants has greatly expanded since the development of synthetic fibers in the 1940s and 1950s. Some well-established textile surgical implants include artificial arteries, hernia mesh, sutures, bone fixation plates, hip joints,[1,2] and more recently, material for the regeneration of tissues and organs.[3,4]

It is well established that the fundamental building blocks of living systems are fibrous in nature. From the 1.5-nm double-helix strand of DNA molecules (including cytoskeleton filaments with diameters around 30 nm) to sensory cells such as hair cells and the rod cells of the eyes, fibers form the extracellular matrices—the multifunctional structural backbone—for tissues and organs.[5] Whereas collagen fibrils constitute the structural backbone of connective tissues such as tendons and ligaments, specific junctions between various cells conduct electrical and chemical signals that result from various kinds of stimulation. The signals direct normal functions of the cells such as energy storage, information storage and retrieval, tissue regeneration, and sensing. Figure 1 illustrates the hierarchical fibrous nature of biological tissues.[5] The architecture of these natural fibrous structures is a blueprint for the design and fabrication of replacement body parts and the creation of scaffolds for tissue regeneration.

Man-made or regenerated fibrous structures in fabric form are attractive candidates for surgical implants. Because of their large length-to-diameter ratio and flexibility, metallic, ceramic and polymeric materials in fibrous form can be organized into textile structures in linear, two-dimensional, and three-dimensional structures. The enormous possibilities of combinations of material properties and structural geometry can result in structures exhibiting one or more of the following characteristics:

- High strength-to-weight ratio.
- High voluminosity.
- Controlled modulus, extensibility, flexibility, pliability.
- Conforming behavior.
- Reactive or nonreactive to body environment.
- Controlled porosity and permeability.
- Ease of suturing, clamping, or joining.
- Compatible surface texture for tissue adhesion.
- Structural similarity to body tissues and organs.

Available fibers can range from the very strong aramid or gel-spun polyethylene to the extremely extensible elastomers. The properties of some of the candidate fibers are shown in Table 1.[6] The stress-strain behavior of a wide range of fibers tested in ambient and physiological conditions is shown in Fig. 2.[7,10] As a result of their higher molecular orientation, the tensile

Encyclopedia of Biomaterials and Biomedical Engineering DOI:10.3109/E-EBBE-120007294
Copyright © 2008 by Informa Healthcare USA, Inc. All rights reserved.

Edwards v. Aortic Innovations
U.S. Patent 11,491,033
Edwards Ex. 1109

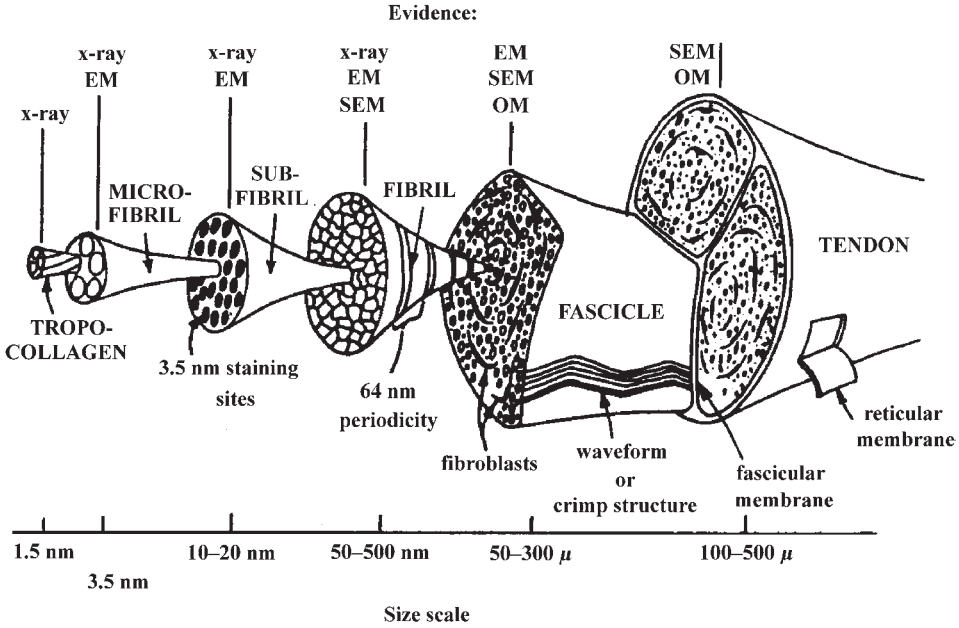

Fig. 1 Hierarchical organization of fibrous structures of biological tissues. (From Ref. [5].)

properties of the high-tenacity fibers are quite insensitive to the physiological environment.

Although biomaterials that are nonreactive to body environment are desirable for some surgical applications, the emergence of tissue engineering has resulted in a trend in surgical implants toward materials that respond to the body environment in a programmable manner. A large number of absorbable polymers have been developed in recent years. These absorbable polymers serve a temporary purpose: Once the wound or fracture heals, the implant, suture, or other structure disappears. Table 2[8] gives a summary of some of the synthetic absorbable polymers and their applications.

The various fibers can exist in monofilament, multifilament (with or without twist), textured, and staple fiber forms to create a wide variety of surface geometries and extensibilities. Figure 3a illustrates the different types of linear fibrous assemblies available for use. In Fig. 3b, the stress-strain behavior of the various linear fiber assemblies is illustrated.[9]

The fibers or yarns can be converted into a tremendous array of 2-D and 3-D fabric structures, as shown in Fig. 4.[10] An implant designer can utilize, for example: 1) highly covered and bulky nonwoven structures; 2) dimensionally stable plain-weave fabrics; 3) weft-and-warp-insertion warp knits (warp-knitted structures with inserted linear yarns integrated into the fabric during fabric formation, along the machine direction (warp) and across the machine direction (weft), respectively); and 4) highly conformable weft knits and braids, as well as net-shaped three-dimensional fabrics, which provide a means to organize fibrous networks similar to the structural features of various body parts.

STRUCTURAL COMPONENTS OF FABRICS

Textile Units

Fabrics are characterized by fiber material (polyester or polylacticglycoic [PLAGA]), fiber geometry (crimp,

Table 1 Properties of candidate materials for prostheses

Fiber	Tenacity (g/denier)	Breaking elongation	Young's modulus (g/denier)
Polytetraflouride (Teflon)	1	45%	5
Polyester (Dacron 55)	6	30%	30
Polyamide (Nylon 65)	6	45%	20
Aramid (Kevlar 29,49)	22	3–6%	450–1000
Acrylic (Orlon)	2.5	25%	10
Stainless steel (315 L)	3	1%	300
Polypropylene (Olefin)	5	50%	30

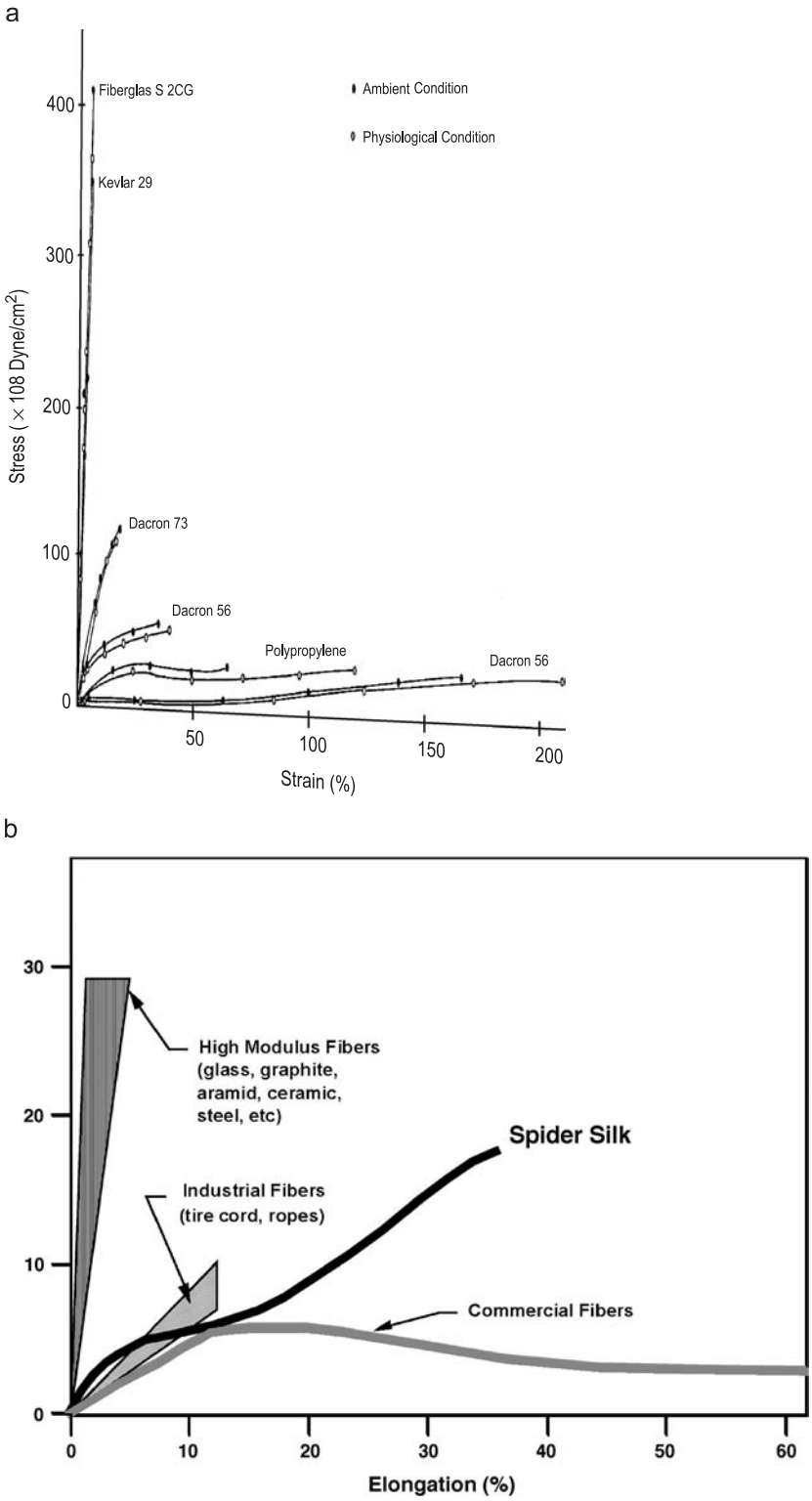

Fig. 2 a. Stress-strain behavior of a wide range of fibers tested in ambient and physiological conditions.[7] b. Stress-strain properties of various groups of fibers. (From Ref. [10].)

cross-sectional shape, fineness), yarn geometry (monofilament or textured multifilament), fabric construction (woven, knit, braid), and fabric weight (mass per unit area). Similar to soft biological tissues, the compressible nature of fibrous assemblies makes it difficult, if not impossible, to precisely measure the dimension of fibrous materials. The cross-sectional area of fibers and linear fiber assemblies are more conveniently expressed in terms of the traditional textile unit of linear density: the denier. One denier is the thickness of a fiber with mass of one gram per 9000 meters. Alternatively, the linear density can be expressed as the SI unit kg/m, or

Table 2 Absorbable Fibers

Polymer	Product
Polylactic acid (PLA)	Suture
	Maxillofacial surgery
	Controlled-release device
Polyglycolic acid (PGA) (DEXON)	Suture
	Bone plate, pins, screws
	Gauzes, sponge
PLA/PGA copolymer (Vicryl)	Suture
Polycaprslactone and copolymer	Hernia
Polydioaxone (DDS)	Suture
Composite-PLA/PGA, ceramic and carbon fibers	Bone fixation
	Bone repair
Polyester-amides	Suture
Isomorphic copalyoxalates and polyalkylene oxalates	Suture
	Controlled-release device
	Surgical aid
Polyethylene oxide–polyethylene telepthalate copolymers	Artificial artery
	Tendon

tex. The equivalent cross-sectional area or specific cross-sectional area has the following expression:[11]

$$A_{sp} = \frac{\text{tex}}{10^5 \times \text{density}}\text{cm}^2 = \frac{\text{denier}}{9 \times 10^5 \times \text{density}}\text{cm}^2 \quad (1)$$

With the specific cross-sectional area expressed in terms of linear density, one can obtain the specific stress and other quantities in mechanics by normalizing of force by A_{sp} (to obtain force/area [MPa or psi]) or by linear density, such as force/linear density (g/denier; g/tex; N/tex). For fabric structures (planar and 3-D assemblies), the normalization of properties can be carried out using the following relationships for specific stress:[12]

$$\frac{\text{N}}{\text{tex}} = \frac{\dfrac{\text{force (N)}}{\text{width (mm)}}}{\text{fabric areal density(g/m}^2)} \quad (2)$$

$$1\ \text{N/tex} = 1\ \text{GPa/density(g/cc)}.$$

Fibers

A textile fiber is an entity of matter that is processable in a textile manufacturing process and characterized by slenderness, flexibility, and a high length-to-diameter ratio greater than 1000:1. Beside flexibility, the unique characteristic of textile fibers is a combination of strength, light weight, and toughness. As shown in Fig. 2, the strength of fibers ranges from 1 g/den* to 40 g/den for super-high-strength fibers, with elongation ranging from 1% to several hundred percent for elastomers.

Depending on chemical composition and internal structure, fibers have different stress-strain properties. The stress-strain curves of natural and man-made fibers

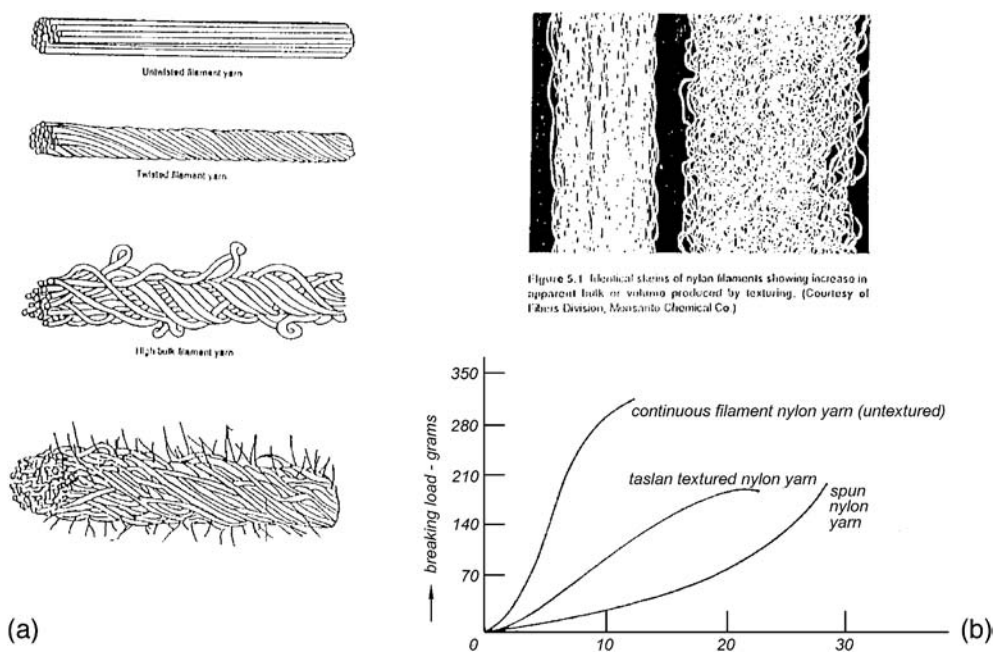

Fig. 3 Linear fiber assemblies and textured yarns. (From Ref. [9].)

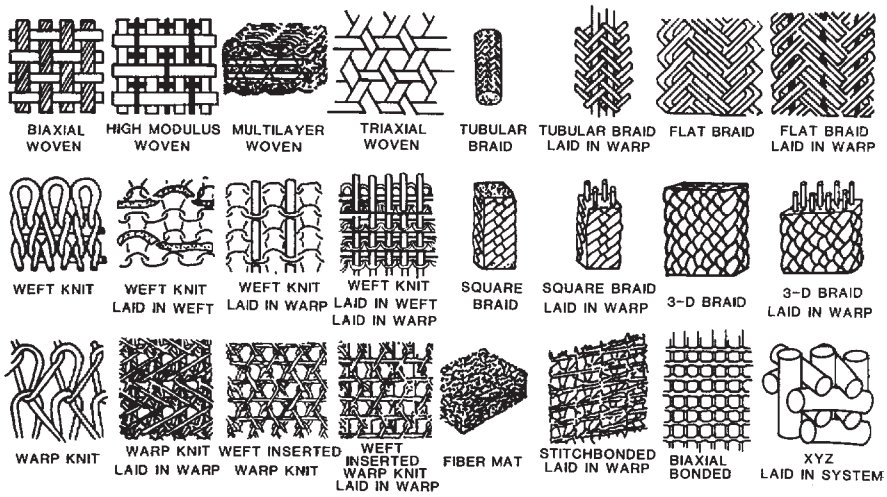

Fig. 4 Fiber architecture for surgical implants. (From Ref. [16].)

shown in Fig. 2 exhibit the wide range of material properties available at our disposal.[10] It is of interest to observe that the fiber with the best combination of strength and toughness is spider silk.[13]

Yarns

A yarn is a linear assembly of discrete textile fibers or continuous filaments in a form suitable for knitting, weaving, or intertwining in order to form textile fabrics. Depending upon the nature of the fiber (natural or man-made, long or short, fine or coarse) and the end-use requirements, various yarn formation systems are used. The fiber material properties and the resulting yarn geometry (twist, denier, etc.) determine the performance properties of a yarn and, consequently, dictate the processing methods and the intended applications.

Yarns can be classified according to their form, by the formation system, and by physical properties and performance characteristics (Fig. 3). The three basic forms of yarns are:

- Monofilament, a solid, single strand of unlimited length.
- Multifilament, a multitude of continuous-filament fibers twisted or textured together.
- Staple (spun), a yarn made from staple (discrete-length) fibers; spun yarn.

Table 3 provides a summary of the various types of yarns produced by different yarn formation systems. For more information on the manufacturing technology of yarns, readers are referred to the texts by Goswami et al.[14] and Kaswell.[15]

FABRIC STRUCTURES AND PROPERTIES

There is a large family of fiber architectures available for surgical implants (Fig. 4).[16] The design and selection of these fiber architectures for surgical

Table 3 Classification of yarns based on yarn formation systems

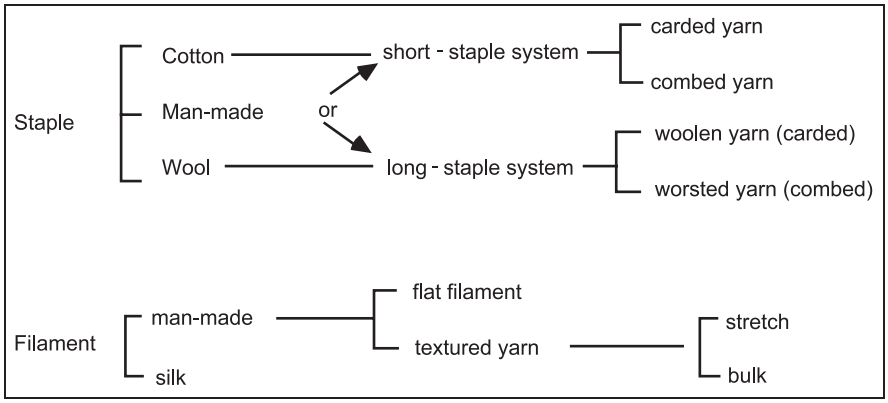

implants or tissue engineering scaffolds can be carried out on the fiber level as well as on the fabric structure level. These fabrics can be made from yarns (yarn-to-fabric structures) or directly from fibers (fiber-to-fabric structures), resulting in a wide range of dimensional scale, fiber tortuosity, and fabric porosity as characterized by the fiber volume fraction-orientation map described in the section on fabric performance characteristics.

Yarn-to-Fabric Structures

In the family of yarn-to-fabric structures, it can be seen that interlooped structures such as weft knits tend to be more porous, more voluminous, and bulkier and thicker. Interlaced structures such as woven fabrics tend to be less porous, less bulky, and thinner. The performance of these fabrics is determined to a great extent by the linearity and interlacing density of the yarns in the fabrics. For example, the weft knits have high extensibility and are extremely comfortable and compressible. As a result of the openness of the loop geometry to a knitted structure, weft knits are highly permeable. The high linearity of the multiaxial (non-crimped) warp knit structure allows only limited extensibility and low toughness. The permeability of woven and multiaxial warp knit fabrics is lower than that of weft knit fabrics because of the high coverage. In general, based on structural geometry, the family of yarn-to-fabric structures can be classified into two major groups: 2-D planar fabrics and 3-D fabrics (wherein more than two yarns are placed in the through-thickness direction).

Structural Geometry of 2-D Fabrics

Woven fabrics

Fabricated by the interlacing of yarns, woven fabrics can be produced in hundreds of possible combinations. From the in-plane fiber orientation point of view, woven fabrics can be divided into biaxial and triaxial woven structures. Biaxial weaves consist of 0° and 90° yarns interlaced in various repeating patterns or topological unit cells. The three basic weave geometries from which many other patterns evolve are the plane, satin, and twill weaves. A schematic diagram for the various views of these three basic weaves is shown in Fig. 5. These three fabrics are distinguished by the frequency of yarn interlacing and the linearity of the yarn segments. The plane weave has the greatest number of interlacing yarns and the satin weave has the least number of yarns interlacing, with the twill weave somewhere in between. Accordingly, the plane weave has a higher level of structural integrity and

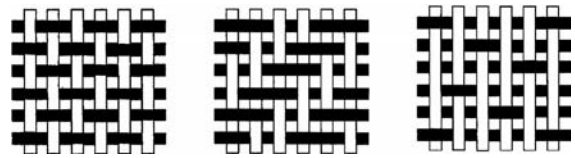

Fig. 5 Three basic weaves.

greater ductility as a result of the crimp geometry produced by yarn interlacing. On the other hand, the satin weave has the highest level of fiber-to-fabric strength and modulus translation efficiency due to the low level of yarn interlacing and high level of yarn linearity. The low level of yarn integration in the satin weave also allows freedom of yarn mobility, which contributes to higher fiber packing density and consequently to higher fiber volume fraction.

Although cane weaving for cane chairs has been known for a long time, a machine-made triaxial weave wasn't available until Norris Dow's development of triaxial machine weaving in the early 1970s.[17] The unique feature of triaxial weave is the $90 \pm 60°$ hexagonal yarn orientation in one plane, resulting in a high level of in-plane shear resistance. High levels of isotropy and dimensional stability can be achieved with triaxial weave at very low fiber volume fraction. Figure 6 shows a schematic diagram of two triaxial-weave geometries.

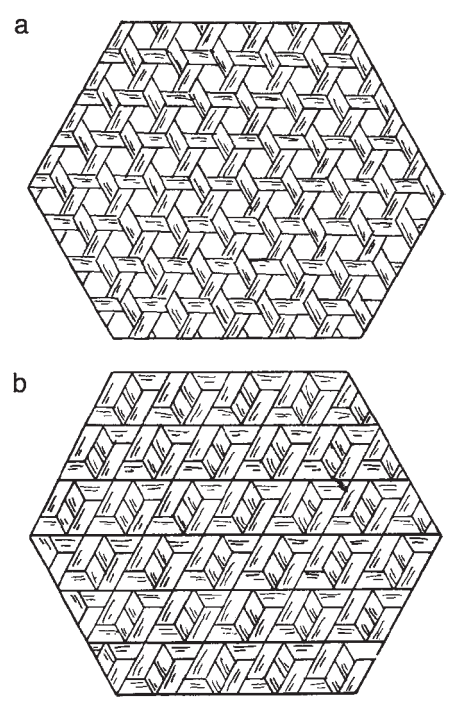

Fig. 6 a. Structural geometry of triaxially woven fabrics (basic weave). b. Structural geometry of triaxially woven fabrics (biplane weave).

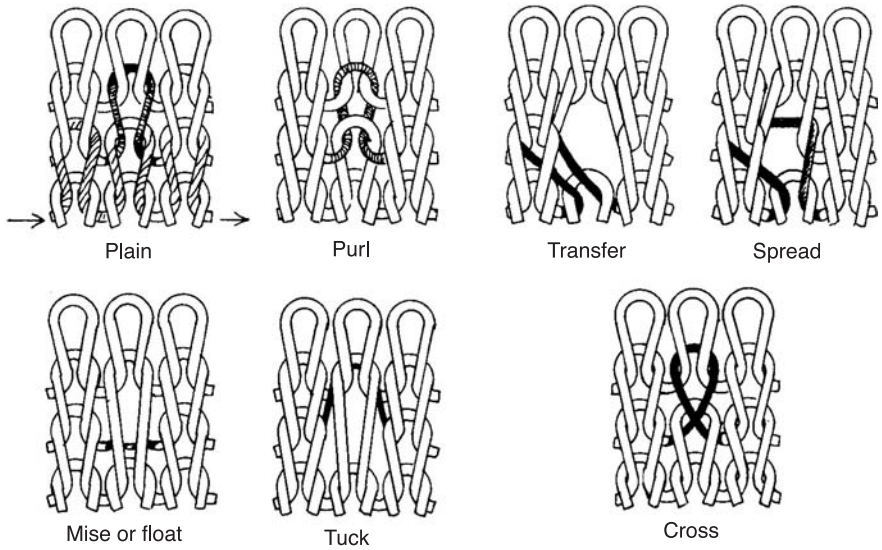

Fig. 7 Weft-knitted structures.

Knitted fabrics

Knitted fabrics are interlooped structures wherein the knitting loops are produced by the introduction of the knitting yarn either in the cross-machine direction (weft knit), as in Fig. 7, or along the machine direction (warp knit), as in Fig. 8, producing a large number of stitch geometries. By controlling the stitch (loop) density, a wide range of pore geometries can be generated. Because of their interlooped nature, the maximum fiber packing density of knitted structures is lower than that of the woven fabrics. The high level of conformability and porosity of weft-knitted fabrics makes them ideal candidates for vascular implants.

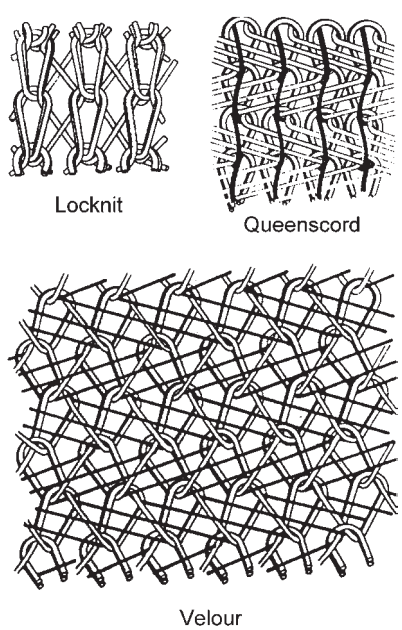

Fig. 8 Warp-knitted structures.

Braided fabrics

By intertwining three or more yarn systems together, braided fabrics can be produced in flat or tubular form (Fig. 9). The bias-interlacing nature of the braided fabrics make them highly conformable and shear resistant. To enhance reinforcement in the 0° direction, triaxial braiding can be employed to introduce $0 \pm \theta$ yarns, as shown in Fig. 10. Because of the torque-free nature of braided fabrics, they are used extensively for sutures and are increasingly being considered for orthopaedic applications, such as ligaments and tendons.

Structural Geometry of 3-D Fabrics

The structural geometry of the 3-D fabrics will be discussed according to the four basic methods of textile

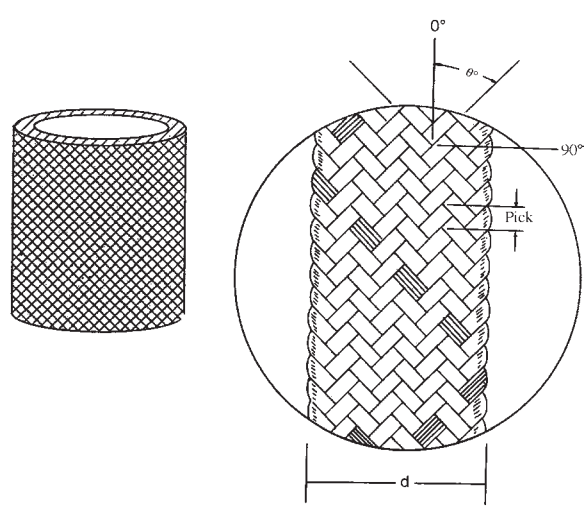

Fig. 9 2-D braided structures.

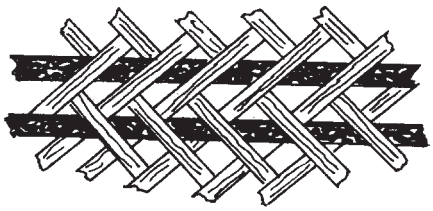

Fig. 10 Triaxially braided structure.

manufacturing: weaving, orthogonal, knitting, and braiding.

Woven 3-D fabrics

Three-dimensional woven fabrics are produced using the multiple-warp weaving method, which has long been used to manufacture double and triple cloth for bags, webbings, and carpets. Fabrics have been successfully woven with as many as 17 layers. Various fiber architectures can be produced by the weaving method, including solid orthogonal panels (Fig. 11a), variable-thickness solid panels (Fig. 11b), and core structures simulating a box-beam (Fig. 11c) or trusslike structure (Fig. 11d). Furthermore, by proper manipulation of the warp yarns, as exemplified by the angle-interlock structure (Fig. 11e), the through-thickness yarns can be organized into a diagonal pattern. To provide in-plane reinforcement in the bias direction, a new process was developed by Dow[17] as an extension to the triaxial weaving technology, producing multilayer triaxial fabrics as shown in Fig. 12.

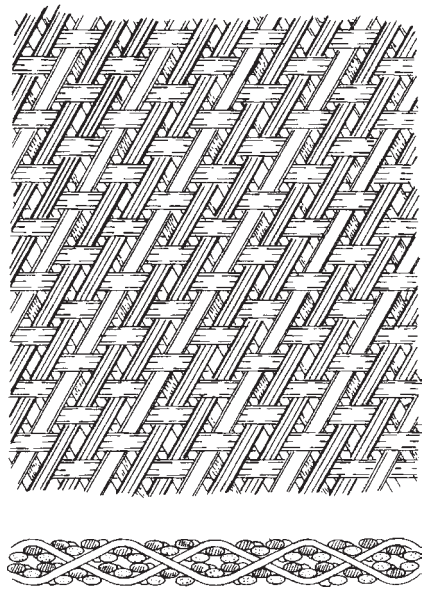

Fig. 12 3-D triaxial weaves (dow).

Orthogonal 3-D fabrics

Pioneered by aerospace companies such as General Electric,[18] the orthogonal 3-D fabric technology was developed further by Fiber Materials Incorporated.[19] Progress in automation of the orthogonal 3-D fabric manufacturing process has been made in France by Aerospatiale[20,21] and SEP,[22] and in Japan by Fukuta at the Research Institute for Polymers and Textiles.[23,24] The structural geometries resulting from the various processing techniques are shown in Fig. 13.[16] Figures. 13a and 13b show the single-bundle

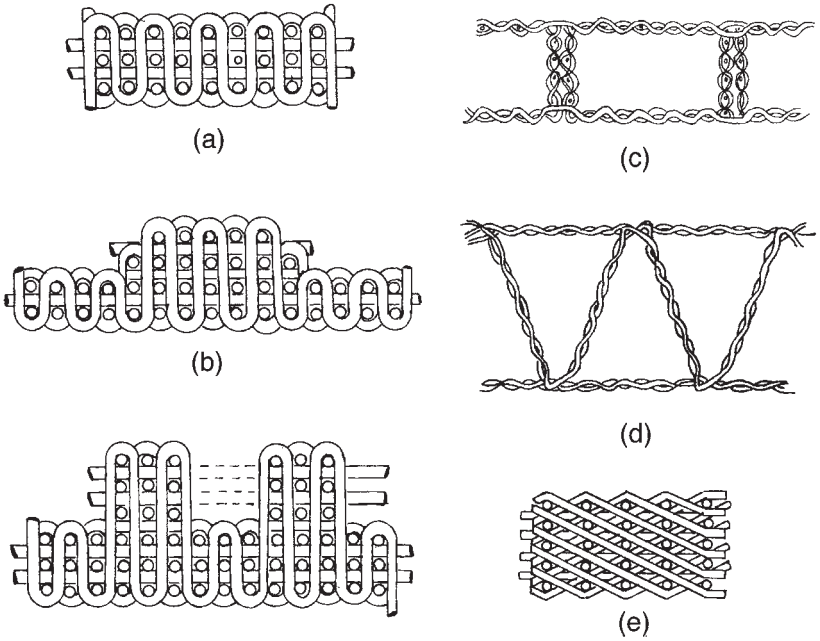

Fig. 11 3-D woven fabrics. (a) Solid shape; (b) variable thickness panel; (c) Box beam; (d) Truss structure; (e) Angle interlock.

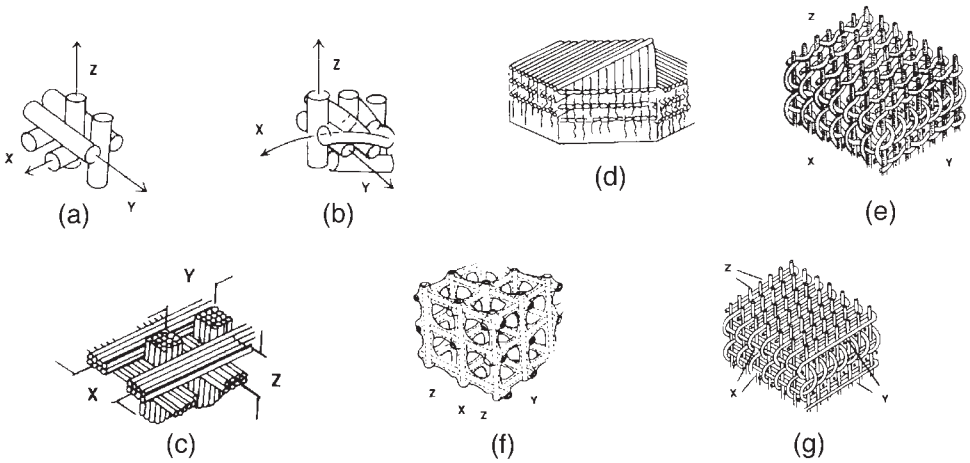

Fig. 13 3-D orthogonal fabrics. (a) Rectangular single bundle shape; (b) Cylindrical single bundle shape; (c) Rectangular multiple bundle shape; (d) Multidirectional 3-D fiber placement; (e) Flexible structure; (f) Open lattice structure; (g) Rigid structure.

XYZ fabrics in a rectangular and cylindrical shape. Figure 13c demonstrates the multiple-yarn bundle possibilities in the various directions. In Fig. 13d the multidirectional fiber placement in the plane of the 3-D structure is shown. Although most of the orthogonal 3-D structures consist of linear yarn in all of the directions, introduction of the planar yarns in a nonlinear manner, as shown in Fig. 13e, f, and g can result in an open lattice, or a flexible and conformable structure. Some of these 3-D lattice structures have been used for producing scaffolds for composite bone implants.[24]

Knitted 3-D fabrics

Three-dimensional knitted fabrics are produced by either warp knitting or weft knitting. An example of a weft knit is the nearly net-shaped structure knitted under computer control by the Pressure Foot® process[25] (Fig. 14). In a collapsed form, this preform has been used for carbon-to-carbon structures. The unique feature of the weft-knit structures is their conformability and their highly porous nature. When additional reinforcement is needed in the 0° and 90° directions, linear laid-in yarns can be placed inside the knitting loops, as shown in Fig. 14.

Multiaxial warp (MWK) fabric

MWK systems consist of warp (0°), weft (90°), and bias ($\pm\theta$) yarns held together by a chain or tricot stitch through the thickness of the fabric, as illustrated in Fig. 15.[26] The major distinctions of these fabrics are the linearity of the bias yarns, the number of axes, and the precision of the stitching process. Depending on the number of guidebars available and the yarn insertion mechanism, the warp-knit fabric can consist of predominantly uniaxial, biaxial, triaxial, or quadraxial yarns. The Mayer Textile Corporation, utilizing a multiaxial magazine weft insertion mechanism, produces the latest commercial nonimpaled MWK fabric. The attractive feature of this system is precision yarn placement, with four layers of linear or nonlinear bias yarns plus a short fiber mat arranged in a wide range of orientations. Furthermore, stitches are formed without piercing through the reinforcement yarns (hence the term, nonimpaled) at a production rate of 100 meters per hour. Another MWK is the impaled LIBA system shown in Fig. 16. This fabric has six layers of linear yarns assembled in various stacking sequences and

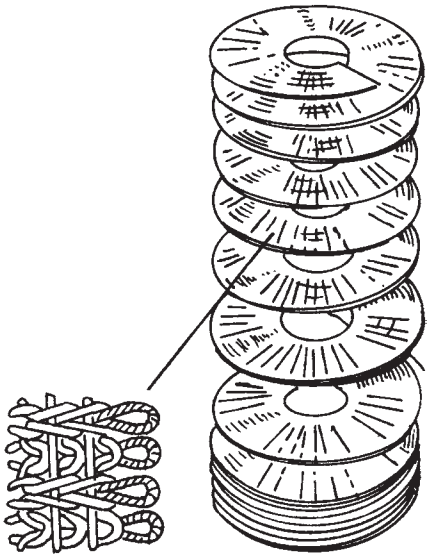

Fig. 14 3-D knitted fabrics (pressure foot®).

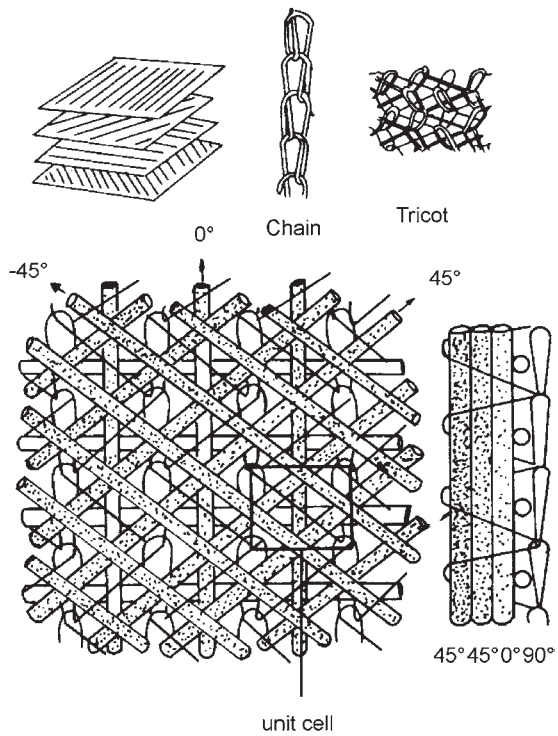

Fig. 15 Multiaxial warp knit (MWK).

stitched together by knitting needles piercing through the yarn layers.

3-D braided fabrics

Three-dimensional braiding technology is an extension of the well-established 2D braiding technology, wherein the fabric is constructed by the intertwining or orthogonal interlacing of two or more yarn systems to form an integral structure. A wide variety of solid, complex structural shapes can be produced in this manner, resulting in 3-D interconnected fibrous structures.[27] Figure 17 shows two basic loom setups in circular and rectangular configurations. The 3D braids are produced by a number of processes, including the track and column method (Fig. 18), the 2-step method (Fig. 19), and a variety of displacement braiding techniques. The basic braiding motion includes the alternate X and Y displacement of yarn carriers, followed by a compacting motion. Formation of shapes is accomplished by properly positioning the carriers and joining various rectangular groups through selected carrier movements. The 3-D braided structure has been used for various orthopaedic implants, and more recently for tissue-engineered ligament scaffolds.[28]

Fiber-to-Fabric Structures

Fiber-to-fabric structures are generally known as nonwoven fabrics. The simplicity of the manufacturing process—by direct conversion of fibers to fabrics, thus bypassing the yarn formation stage—has great appeal to the apparel and medical textile industries because of the high productivity and cost savings. A majority of surgical gowns are made from nonwoven fabrics. One of the obstacles preventing more extensive use of nonwovens for primary garment applications is the lack of drapability/conformability, or the paperlike nature, of nonwoven fabrics. There is an increasing variety of fabrication processes for nonwoven fabrics. Of the two major classes of nonwovens, chemically and mechanically bonded nonwovens, the mechanically bonded systems (such as needled felts) and spunlaced systems tend to be more voluminous, bulkier, thicker, and nonporous. The chemically bonded nonwovens tend to be more paperlike, thin, low in bulk, and less porous. As a result, the mechanically bonded nonwovens are more permeable, more compressible, and have higher extensibility. The toughness of nonwoven felts is a complex interaction of bonding density, fiber tenacity, and fiber orientation. Because of the high strength of the continuous filaments and the strength of the bonds, a spunbonded system features high levels of shear resistance, tear resistance, and toughness. Needled felt made from strong fibers (e.g., Kevlar), on the other hand, can be quite tough and capable of

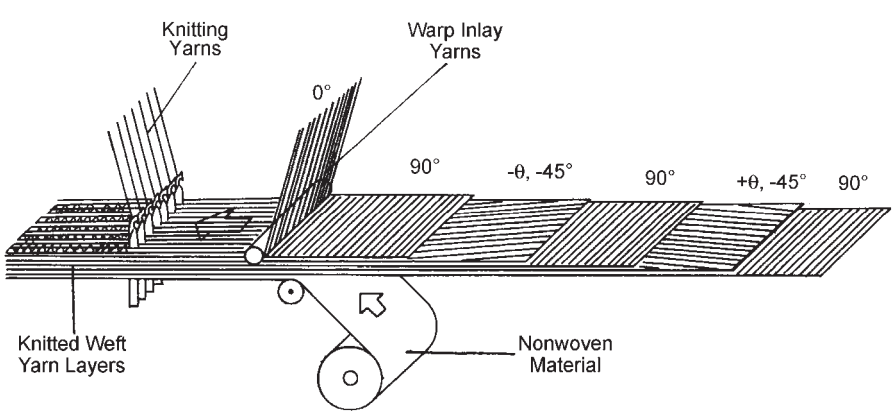

Fig. 16 Multiaxial warp knit (MWK): LIBA system.

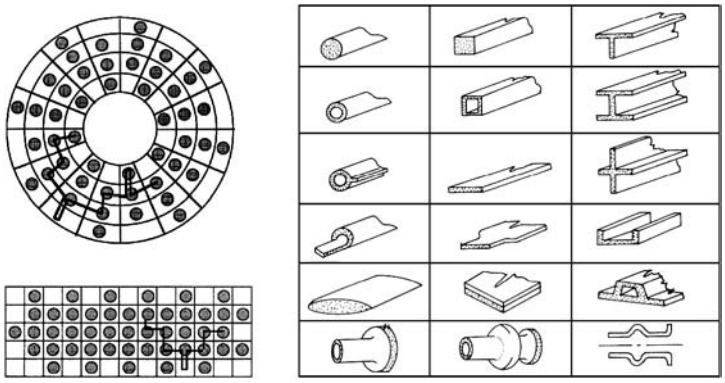

Fig. 17 3-D braiding equipment and net-shaped structures.

arresting fragments from a ballistic projectile when a sufficient level of entanglement is created in the manufacturing process.

Since the 1950s, many of the textile structures illustrated in Fig. 3 have been used for surgical implants, with considerable success. Some of the structures and their respective applications are summarized in Table 4. These fibrous structures are mostly from nonabsorbable polymers consisting of fibers larger than 10 μm in diameter, although some microfibers are increasingly being used. Unfortunately, these fibers are developed primarily for clothing rather than for medical applications. Recently, with the rediscovery of the electrostatic spinning process, a new family of nonwovens and yarns consisting of ultrafine fibrils have been fabricated, with fiber diameters ranging from a few nanometers to a few micrometers. The extension of the basic building block of a fabric to the nanoscale has created new design options for numerous medical fabrics. One method that is capable of direct formation of nanofiber-based yarns and fabrics is the electrospinning process. Electrospinning technology has been detailed in numerous publications,[29] and a brief description is provided here.

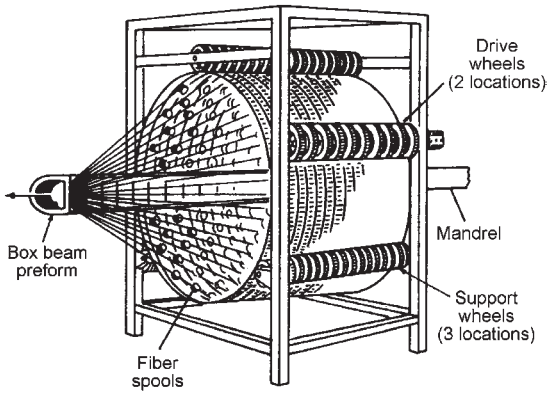

Fig. 18 Track and column 3-D braiding.

Electrospun yarns and fabrics

The electrostatic spinning (electrospinning) process is a simple, nonmechanical process developed over sixty years ago.[30] Because of its simplicity and its capability of generating nanoscale fibers from polymer solutions and melts under ambient conditions, there has been a revival of interest in the electrospinning process to create structures that have ultrahigh surface

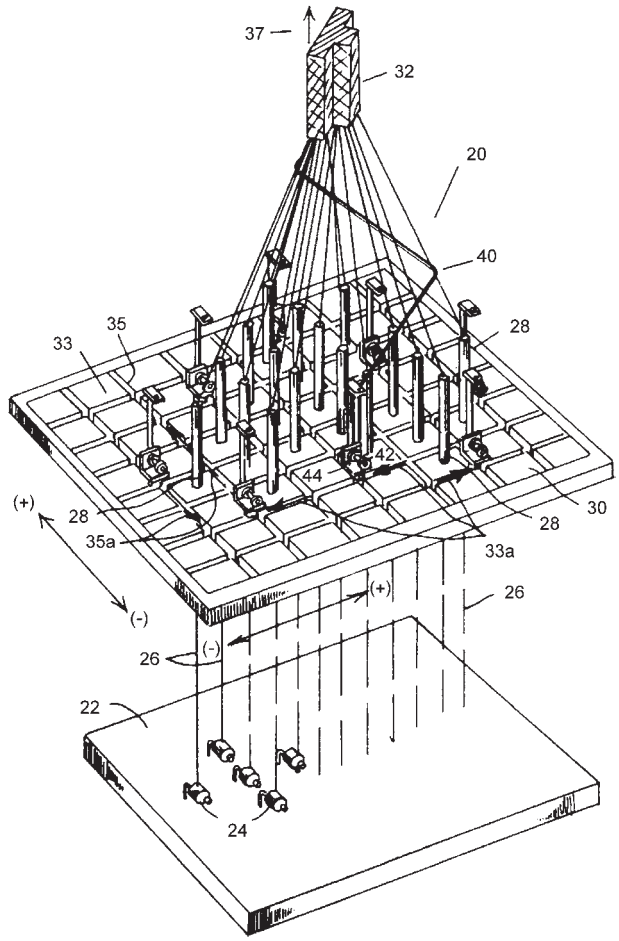

Fig. 19 Two-step 3-D braiding method.

Table 4 Textile structures for surgical implants

Application	Material	Structure	
		Yarn	Fabric
Arteries	Polyester	Textured	Weft/warp knit
	Dacron 56		Straight tube bifurcation
	Teflon		Plain-woven
			Straight tube, nonwoven
Tendon	Polyester	Low-twist filament	Plain-woven narrow tape coated with silicon rubber
	Dacron 56		
	Kevlar		
Hernia repair	Polypropylene	Monofilament	Tricot jersey knit
Esophagus	Regenerated collagen	Multifilament	Plain weave
Heart valve	Polyester	Multifilament	Plain weave
	Dacron 56		Knit
Patches	Polyester	Textured	Knitted velour
	Dacron 56		
Sutures	Polyester	Monofilament	Braid
	Nylon	Multifilament	Woven tapes
	Regenerated collagen		
	Silk		
Ligament	Polyester	Multifilament	Braid
	Teflon		
	Polyethylene		
Bone and joints	Carbon in thermoset or thermoplastic matrix	Multifilament	Woven
			Braid

areas.[31–33] In the electrospinning process, as illustrated in Fig. 20, an electric field is generated between an oppositely charged polymer fluid and a collection screen. A polymer solution is added to a glass syringe that has a capillary tip, and an electrode is placed in the solution, with another connection made to a ground-fiber-collecting metal screen. As the electrical potential is increased, the charged polymer solution is attracted to the screen. When the voltage reaches a critical value, the electric field overcomes the surface tension of the polymer cone formed on the capillary tip of the syringe and a jet of ultrafine fibers with diameters ranging from 2–500 nm is produced. As the charged polymer jets are splayed, the solvent in the fiber quickly evaporates and the fibers are accumulated randomly, or laid parallel on the surface of the collection screen. This results in a porous, nonwoven film, or a yarn composed of nano- to micron-scale fibers. Varying electric field strength, polymer solution concentration, and duration of electrospinning can control fiber diameter and film thickness. In addition, coelectrospinning can be carried out by mixing one or more kinds of functional nanoparticles, nanoplatelets, or nanotubes during solution preparation, resulting in ultrafine nanocomposite fibers that have a multitude of electronic and structural functions.[34]

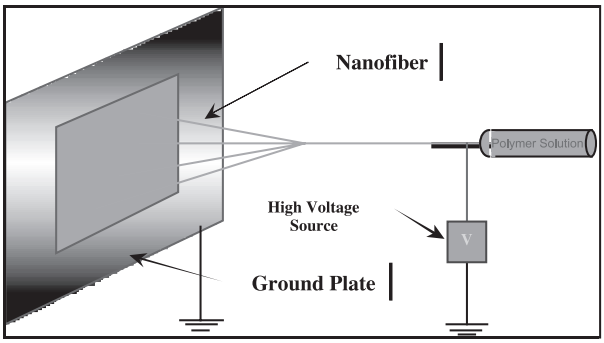

Fig. 20 The electrospinning process.

FABRIC PERFORMANCE CHARACTERISTICS

Fabric performance characteristics are a result of the interaction between fiber (material properties), yarn and fabric geometry, and finishing treatment. As outlined earlier, textile structures in fabric form can be characterized in terms of geometric and performance properties. The performance maps provide an overview of the range of behavior of various fabrics as a function of four geometric parameters and four performance parameters.

The geometric parameters include:

1. Porosity: the amount of open space in a unit volume of the fabric. As the fiber diameter and yarn diameter increase, the structure tends to be porous. The porosity of a fabric is inversely proportional to the areal coverage, or cover factor, of a fabric. A porous fabric tends to be lighter and more permeable.
2. Surface texture: the surface geometry of a fabric, characterized by the smoothness of the surface, which in turn is governed by fiber and yarn diameter. Modular fiber or yarn lengths are the geometric repeating units of the fabric.
3. Voluminosity: a reflection of the bulkiness of a fabric for a given areal density (mass per unit area). A fabric tends to be more voluminous if the fiber and yarn diameter is larger and the freedom of fiber mobility in the geometric repeating unit is high. Voluminosity is directly related to fiber thickness, in that a voluminous fabric tends to be thick.
4. Thickness of the fabric: similar to voluminosity and related to fiber and yarn diameter. The larger the fiber and yarn diameter, the thicker and bulkier is the fabric.

The performance parameters include:

1. Permeability: the ease of air or liquid flow through a fabric. The permeability of a fabric is higher when the porosity of the fabric is high. Porosity and fiber volume fraction (1-porosity) are related to packing efficiency, which is influenced by fiber diameter and fiber cross-sectional geometry. Permeability is a strong function of fiber or yarn diameter for a given fiber architecture (fiber orientation).
2. Compressibility: the ability of a fabric to resist transverse (through the thickness) compression. A voluminous fabric tends to be more compressible. On the other hand, compressibility decreases with the stiffness of fiber and yarn, which is significantly influenced by fiber diameter. As fiber diameter increases, the bending stiffness and longitudinal compressive stiffness of the fiber increases geometrically.
3. Extensibility: a measure of the ability of a fabric to stretch and conform. Fabric extensibility is affected by fabric geometry and inherent fiber-bending elongation. A yarn that consists of finer fibers tends to have a higher potential for fabric extensibility.
4. Toughness: a measure of the durability of a fabric. As reflected in the areas under the stress-strain curve of a fabric, a high-strength fabric with high elongation at break usually produces high toughness. Fabrics having high compliance and extensibility are usually tougher.

Summaries of the geometric and performance properties of the yarn-to-fabric structures, and the fiber-to-fabric structures in the form of performance maps, are shown in Figs. 21–24. These performance

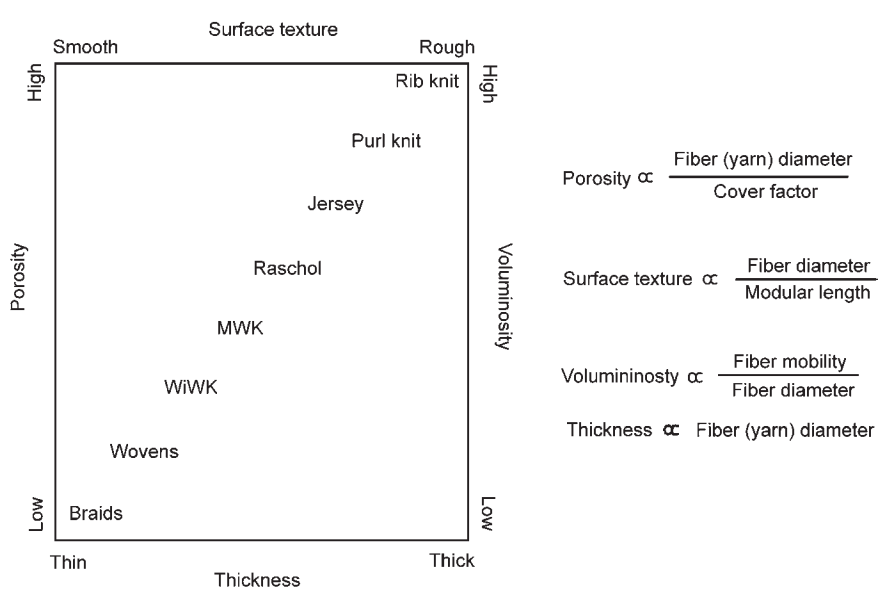

Fig. 21 Geometric properties of yarn-to-fabric structures.

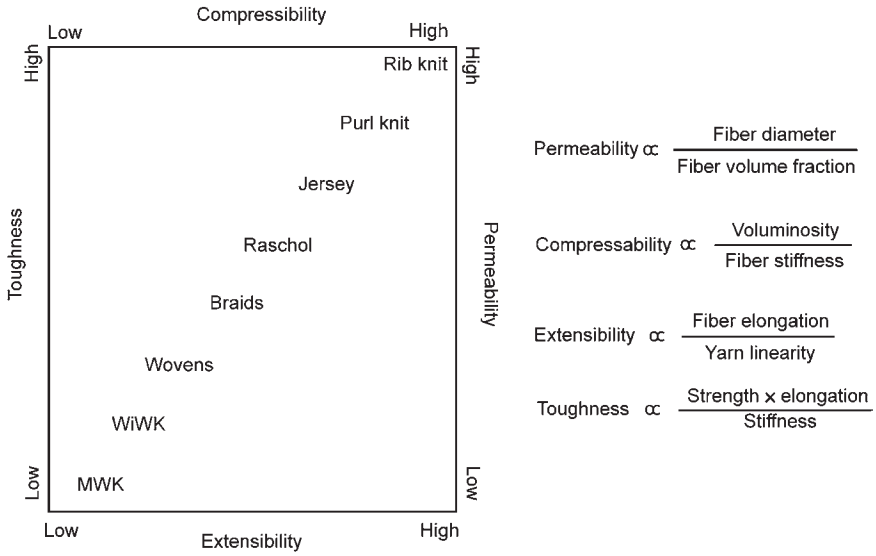

Fig. 22 Performance properties of yarn-to-fabric structures.

maps show that the geometric parameters play an important role in the structural and physical properties of fabrics. One key geometric factor is the fineness of the component fiber.

FABRIC SCAFFOLDS FOR TISSUE ENGINEERING

In addition to traditional applications for surgical implant development, fabric structures are excellent candidates for the emerging field of tissue engineering, or regenerative engineering. As articulated succinctly by Vacanti and Mikos,[36] the key challenges in tissue engineering are: 1) the synthesis of new cell adhesion-specific materials; and 2) development of fabrication methods for the manufacturing of reproducible three-dimensional synthetic or natural biodegradable polymer scaffolds, with tailored properties. These properties include dimensional porosity, pore size distribution, and connectivity; mechanical properties for load-bearing applications; and rate of degradation. In this article, we introduce the large family of three-dimensional fiber architectures, as well as the range of fiber-size scales available for tissue engineering.

The geometry and size scale effect and their potential for tissue-engineering scaffolds are demonstrated through various fibrous structures.[37] Specifically, experiments were carried out using osteoblasts isolated from neonatal rat calvaria and grown to confluence in Ham's F-12 medium (GIBCO), supplemented with 12% Sigma fetal bovine on polylacticglycoic acid (PLAGA) sintered spheres, 3-D braided 20 mm filament bundles, and nanofibrils.

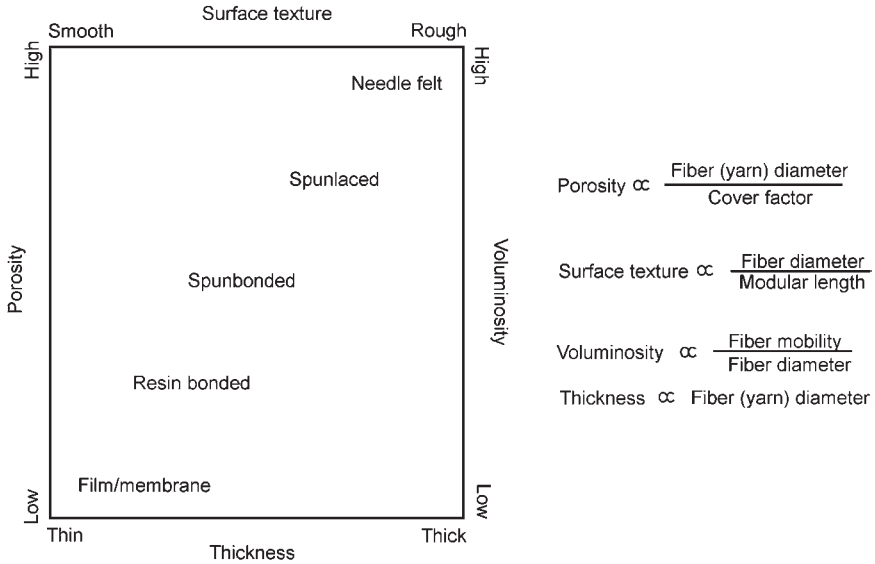

Fig. 23 Geometric properties of fiber-to-fabric structures (nonwoven fabrics).

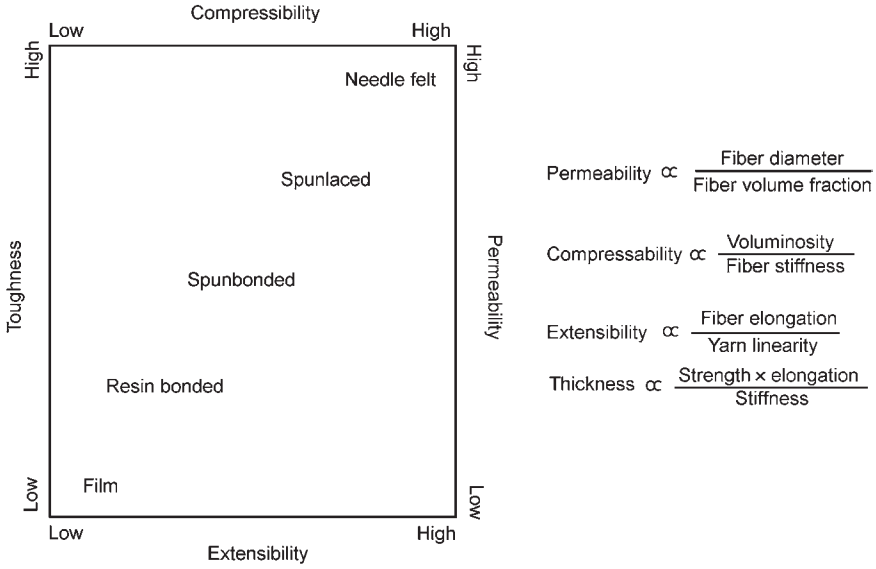

Fig. 24 Performance properties of fiber-to-fabric structures (nonwoven fabrics).

Four matrices were fabricated for the cell culture experiments:

1. 150–300 mm PLAGA sintered spheres.
2. Unidirectional bundles of 20 mm filaments.
3. 3-D braided structure consisting of 20 bundles of 20 mm filaments.
4. Nonwoven structure consisting of nanofibrils.

The porosity of the microsphere structure, the nanofibrous specimens, and the 3-D braided structures were characterized by mercury porosimetry measurement to determine their pore size distributions. Cells were seeded on the UV sterilized PLAGA matrices at a density of 100,000 cells per cm^2. The osteoblasts were cultured on the matrices for durations ranging from one day to 21 days. These specimens were prepared according to established procedures by fixing in gluteraldehyde and dehydrating through a series of ethanol dilutions. The seeded cells were labeled with [^{3}H]-thymidine, and the thymidine uptake was measured at 1, 3, 7, 10, and 11-day intervals.

Pore Size Distribution

The pore size and distribution of the various specimens were characterized using a Micrometrics Autopore III porosimeter. As shown in Fig. 25, a bimodal distribution of pores was observed for the 3-D braided structures, showing the existence of large interstitial pores on the order of 250 μm and interfiber pores having a diameter on the order of 30 μm. At the other extreme, as shown in Fig. 26, the nanofiber structures show a predominant concentration of pores with an average pore size of 14 μm. The pore surface of the nanofibrous structures was 0.823 m^2/g, an order of magnitude greater than that in the 3-D braided structure at 0.0045 m^2/g. The sintered spheres show a single-mode pore diameter distribution over the range

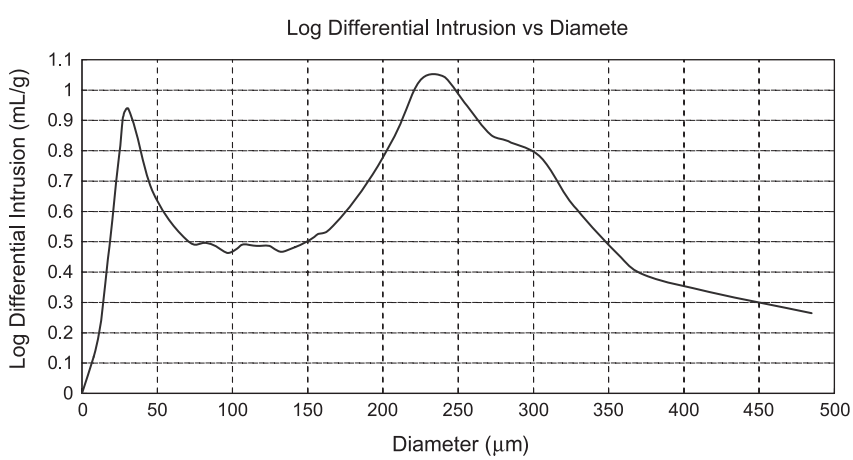

Fig. 25 Pore size distribution of braided structure.

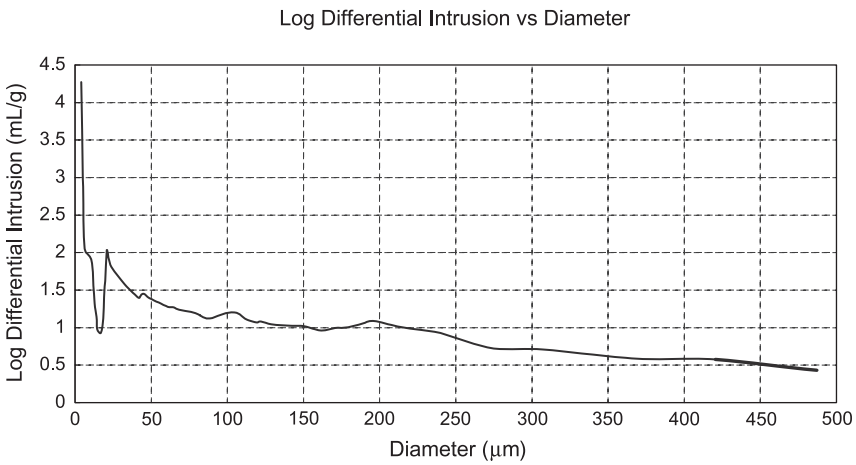

Fig. 26 Pore size distribution of nanofibrous nonwoven structure.

of 200–600 μm, depending on the sphere diameter, as shown in Fig. 27.

Cell Proliferation

Cell proliferation was quantitatively measured by uptake of radio-labeled methyl [^{3}H] thymidine (Sigma, St. Louis MO). During the last 6 hours of cell incubation, 10 μCi of [^{3}H]-thymidine was added to each sample well. Incubation was terminated by removal of the radioactive media. Cells were fixed to the matrices by soaking in methanol for 10 minutes. Samples were then rinsed twice with Hank's Balanced Salt Solution (HBSS). Uptake of [^{3}H] thymidine into cellular DNA was assessed by dissolution of the material in 2N perchloric acid. Uptake was measured using an EC&G–Wallac 1027 Beta scintillation counter.

The cell proliferation, as shown in Fig. 28, is expressed in terms of the amount of [^{3}H]-thymidine uptake as a function of time. It can be seen that there is a consistent increase of cell population with time. The nanofibrous structure demonstrated the most proliferate cell growth whereas the tightly woven 3-D braided structure showed the least proliferation. On the other hand, the cell growth, in fused microsphere structures is between that of the 3-D braid and the nanofibrous structures, showing a surprising drop after the 10th day.

Cell–Scaffold Architecture Interaction

Experimental results show that cell growth pattern is related to the relative dimensions between the components in the scaffold and the cells. Scanning electron microscopy pictures were taken from the cell–matrix systems, which were prepared in a series of Freon 113 dilutions (25%, 50%, 75%, and 100%). The SEM samples were sputter-coated with gold (Denton Desk-1 Sputter Coater). An Amray 3000 SEM using an accelerating voltage of 20 kV was employed to take the SEM photographs shown in Fig. 29. It can be seen that in responding to the large spheres, wherein the cells are more than 10 × smaller than the spheres (Fig. 29a), the cells tend to spread over the surface of the sphere before connecting to the adjacent spheres and eventually forming an interconnected cellular network. In the case

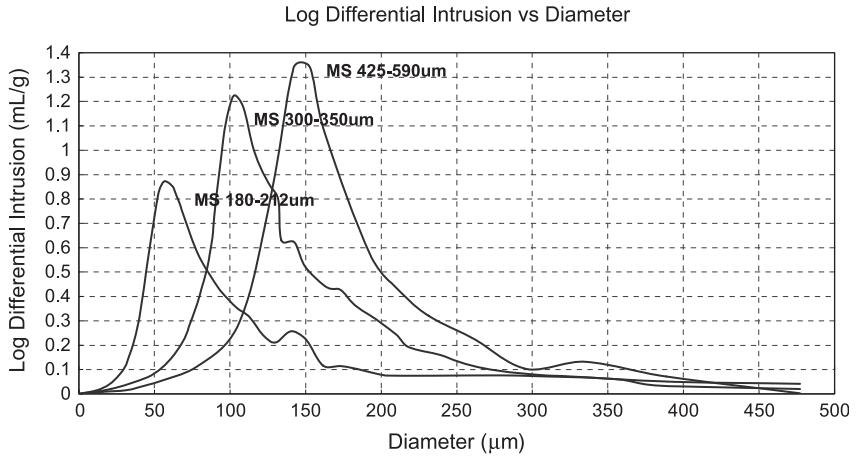

Fig. 27 Pore size distribution of sintered spheres.

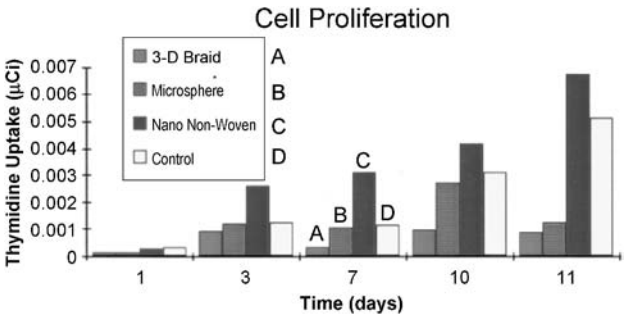

Fig. 28 Cell proliferation of fibrous scaffolding.

of 20 μm filaments in unidirectional bundles and 3-D braid (Fig. 29b), wherein the cells are about the same order of magnitude in dimension, the cell–matrix interactions appear to be similar. The cells tend to slide off the matrix at the moment of seeding. For those cells remain on the surface of the substrates they tend to grow around the filaments and bridge onto the adjacent filaments along the length of the fibers. The most intensive cell deposition was seen in the nanofibril nonwoven structure (Fig. 29c), wherein the cells are more than an order of magnitude larger than the individual fibrils. Extensive cell spreading was observed along the length of the fibrils and through the thickness. This suggests the feasibility of organizational cell growth.

This study showed that fiber-based scaffolds are capable of supporting cell attachment and proliferation. The use of fiber technology in tissue engineering holds several advantages over a number of nonfibrous 3-D structures. Mainly, the ability to impart high levels of structural organization to the matrix may allow for precise control of matrix structure. The 3-D braided and nonwoven matrices demonstrate a range of 3-D fiber architectures that can be designed and produced. The braided matrix consisted of highly organized PLAGA yarns woven into a 3-D structure. Although the nonwoven matrix was the result of randomly oriented microfibers, the structure was highly uniform. Both the four-step, 3-D braiding technique and the electrospinning process are promising fabrication methods showing high levels of versatility. The use of hierarchical fiber architecture-based design enables the tailoring of a broad spectrum of substrates with a wide range of mechanical properties, and the creation of structures capable of supporting cell proliferation, as well as the microdiffusion of nutrients throughout the structure.

The ability to manufacture a variety of different matrices/scaffolds and the ability to maintain precise control over matrix fabrication are extremely important factors in the design of a tissue-engineered scaffold. Based on the results of the study reported in this article and in an increasing body of work,[28,38] it seems that fiber-based scaffolds show promise as replacements for orthopaedic tissues, as well as for a broad range of biological tissues such as skin, arteries, muscles, and others.

SUMMARY AND CONCLUSIONS

This article provides an overview of the structural components of fabrics and a description of the various 2-D and 3-D fabrics, along with a gallery of the various fabric structures. The potential application of fabrics for scaffolds in the emerging field of tissue engineering is also reviewed in light of the development of nanofibers and nanofiber-based fabric structures.

Fibrous materials in fabric forms are an important structural backbone for surgical implants and tissue-engineering scaffolds. Analogous to natural tissues and organs, the fabric structures are organized into hierarchical fiber architecture, thus forming a scaffold for cell adhesion, migration, and proliferation.

Successful development of surgical implants and medical textiles requires a thorough knowledge of the structure and properties of fabrics. In addition to their use as surgical implants for the replacement or regeneration of body parts, fabrics are also important

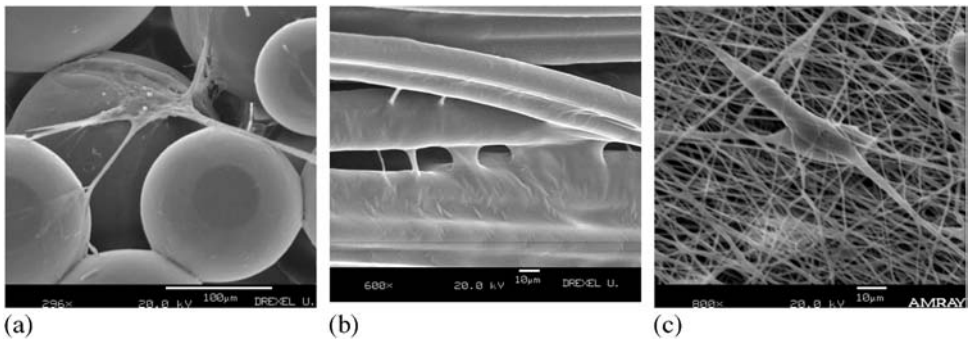

Fig. 29 Cell-fiber architecture interaction: a, sphere; b, braid; c, nonwoven.

substrates for drug delivery and a wide range of medical textiles, including numerous hospital supplies ranging from nurses' uniforms to surgical gowns, drapes, and masks.

ARTICLES OF FURTHER INTEREST

Biocompatibility Testing; *Collagen*; *Electrospinning*; *Poly(Glycolic Acid)*; *Poly(lactic acid)s*; *Polymers*; *Tissue Engineering Scaffolds*; *Vascular Grafts*

REFERENCES

1. Williams, D.F.; Roaf, R. *Implants in Surgery*; W.B. Saunders Company: Philadelphia, 1973.
2. Lee, H.; Neville, K. *Handbook of Biomedical Plastics*; Pasadena Technology Press, 1971.
3. Nerem, R.; Sambanis, A. Tissue engineering: From biology to biological substitutes. Tissue Eng. **1995**, *1* (1).
4. *Principles of Tissue Engineering*; Lanza, R.P., Langer, R., Chick, W.L., Eds.; R.G. Landes Company and Academic Press, Inc., 1997.
5. Baer, E.; Kastelic, J.; Galeski, A.J. Connect. Tissue Res. **1978**, *6*, 11.
6. Ko, F.K. Fiber Reinforced Composites in Medical Applications. Proceedings of the Fiber Producer Conference, Clemson University, Oct. 24, 1984; 30–33.
7. Winston, S.M. Viscoelastic Behavior of Fibers under Physiological Conditions. M.S. Thesis; Cornell University, 1978.
8. Ozer, Z. Synthetic Absorbable Polymers for Implantation. Textile Engineering Seminar, Philadelphia College of Textiles and Science, October, 1982.
9. Piller, B. *Bulk Yarns—Production, Processing and Applications*; SNTL: Prague, 1973.
10. Ko, F.K. Medical applications for textile structures. Text. Asia **April, 1997**, *4*.
11. *Mechanics of Flexible Fiber Assemblies*; Hearle, J.W.S., Thwaites, J.J., Amirbayyat, J., Eds.; NATO ASI, Ser. E Appl. Sci., Sijthoff & Noordhoff 1980; Vol. 38.
12. Hearle, J.W.S.; Grosberg, P.; Backer, S. *Structural Mechanics of Fibers, Yarns, and Fabrics*; Wiley-Interscience, 1969; Vol. 1.
13. Ko, F.K. Engineering Properties of Spider Silk Fibers. In *Natural Fibers, Plastics, and Composites*; Wallenberger, F.T., Weston, N., Eds.; Kluwer Academic, 2000.
14. Goswami, B.G.; Martindale, J.G.; Scardino, F.L. *Textile Yarns, Technology, Structure and Applications*; John Wiley and Sons: New York, 1977; 273–337.
15. Kaswell, E.R. *Wellington-Sears Handbook of Industrial Textiles*; Wellington-Sears: New York, 1963.
16. Ko, F.K. Preform architecture for ceramic matrix composites. Ceram. Bull. February, **1989**, *68* (2).
17. Dow, N.F.; Tranfield, G. Preliminary investigations of feasibility of weaving triaxial fabrics (Dow weave). Tex. Res. J. **1970**, 986–998.
18. Stover, E.R.; Mark, W.C.; Marfowitz, I.; Mueller, W. Preparation of an Omniweave-Reinforced Carbon-Carbon Cylinder as a Candidate for Evaluation in the Advanced Heat Shield Screening Program. AFML TR-70283, Mar. 1979.
19. Herrick, J.W. Multidimensional Advanced Composites for Improved Impact Resistance. 10th National SAMPE Technical Conference, Oct. 17–19, 1977.
20. Pastenbaugh, J. Aerospatiale Technology. 3rd Textile Structural Composites Symposium, Philadelphia, PA, June 1–2, 1988.
21. Bruno, P.S.; Keith, D.O.; Vicario, A.A., Jr. Automatically woven three dimensional composite structures. SAMPE Q. **July 1986**, *17* (4), 10–16.
22. O'Shea, J. Autoweave : A Unique Automated 3-D Weaving Technology. 3rd Textile Structural Composites Symposium, Philadelphia, PA, June 1–2, 1988.
23. Fukuta, K.; Aoki, E. 3-D Fabrics for Structural Composites. 15th Textile Research Symposium, 1986.
24. Fukuta, K.; Aoki, E.; Onooka, R.; Magatsuka, Y. Application of latticed structural composite materials with three dimensional fabrics to artificial bones. Bull. Res. Inst. Polym. Tex. **1982-2**, *131*, 151–159.
25. Williams, D.J. New knitting methods offer continuous structures. Adv. Compos. Eng. Summer **1978**, 12–13.
26. Ko, F.K.; Pastore, C.M.; Yang, J.M.; Chou, T.W. Structure and Properties of Multidirectional Warp Knit Fabric Reinforced Composites. In *Composites '86: Recent Advances in Japan and the United States*, Proceedings, Japan-U.S. CCM-III, Tokyo, Kawata, K., Umekawa, S., Kobayashi, A., Eds.; 1986; 21–28.
27. Ko, F.K.; Pastore, C.; Head, A. *Atkins and Pearce Handbook of Industrial Braids*; Drexel University, 1989.
28. Cooper, J.A. Design, Optimization and In Vivo Evaluation of a Tissue Engineered Anterior Crucitae Ligament Replacement. In *Ph.D. Thesis*; Drexel University, 2002.
29. Lyons, J.; Ko, F. Nanofiber Technology. In *Encyclopedia of Nanoscience and Nanotechnology*; Nalwa, H.S., Ed.; American Scientific, 2004; Vol. 1–10.
30. Formhals, A. US Patent 1,975,504, Oct. 2, 1934.
31. Reneker, D.H.; Chun, I. Nanometre diameter fibres of polymer, produced by electrospinning. Nanotechnology **1996**, *7*, 216–223.
32. Norris, I.D; Shaker, M.M.; Ko, F.K.; MacDiarmid, A.G. Electrostatic Fabrication of Ultrafine Conducting Fibers: Polyaniline/Polyethylene Oxide Blends. In *Synthetic Metals*; Elsevier, 2001.
33. MacDiarmid, A.G.; Jones, We., Jr.; Norris, I.D.; Gao, J.; Johnson, A.T., Jr.; Pinto, N.J.; Hone, J.; Han, B.; Ko, F.K.; Okusaki, H.; Llanguno, M. Electrostatically-Generated Nanofibers of Electronic Polymers. In *Synthetic Metals 10*; Elsevier, 2002.
34. Ko, F.; Gogotsi, Y.; Ali, A.; Naguib, N.; Ye, H.; yang, G.; Li, C.; Willis, P. Electrospinning of continuous carbon nanotube-filled nanofiber yarns. Adv. Mater. **July 17, 2003**, *15* (14).
35. Li, W.J.; Laurencin, C.T.; Caterson, E.J; Tuan, R.S.; Ko, F.K. Electrospun nanofibrous structure: A novel

scaffold for bioengineering. J. Biomed. Mater. Res. **March 25, 2002**, *58*, 613–621. Wiley Interscience
36. Sukigara, S.; Gandhi, M.; Ayutsede, J.; Micklus, M.; Ko, F. Regeneration of Bombyx mori silk by electrospinning- Part 1: Processing parameters and geometric properties. Polymer **2003**, *44*, 5721–5727.
37. Vacanti, C.A.; Mikos, A.G. Letter from the Editors. Tissue Eng. **1995**, *1* (1).
38. In Ko, F.K.; Laurencin, C.T.; Borden, M.D.; Reneker, D. In *The Dynamics of Cell-Fiber Architecture Interaction*, Proceedings, Annual Meeting, Biomaterials Research Society: San Diego, April 1998.
39. Fertala, A.; Han, W.B.; Ko, F.K. Mapping critical sites in collagen II for rational design of gene-engineered proteins for cell-supporting materials. J. Biomed. Mater. Res. **2001**, *57*, 48–51.
40. Boland, E.D.; Simpson, D.G.; Wnek, G.E.; Bowlin, G.L. Electrospinning of biopolymers for tissue engineering scaffolds. Polym. Prepr. **2003**, *44* (2), 92.