Trials@uspto.gov
Tel: 571-272-7822

Paper 50
Entered: March 28, 2023

UNITED STATES PATENT AND TRADEMARK OFFICE

BEFORE THE PATENT TRIAL AND APPEAL BOARD

EDWARDS LIFESCIENCES CORPORATION AND
EDWARDS LIFESCIENCES LLC,
Petitioners,

v.

AORTIC INNOVATIONS, LLC,
Patent Owner.

IPR2021-01584
Patent 10,857,011 B2

Before JOHN G. NEW, JASON W. MELVIN, and RYAN H. FLAX,
Administrative Patent Judges.

NEW, *Administrative Patent Judge*

JUDGMENT
Final Written Decision
Determining All Challenged Claims Unpatentable
35 U.S.C. § 318(a)

Edwards v. Aortic Innovations
U.S. Patent 11,491,033
Edwards Ex. 1118

I. INTRODUCTION

We have jurisdiction to hear this *inter partes* review under 35 U.S.C. § 6, and this Final Written Decision is issued pursuant to 35 U.S.C. § 318(a) and 37 C.F.R. § 42.73. For the reasons set forth below, we determine that Petitioners Edwards Lifesciences Corporation and Edwards Lifesciences LLC (collectively "Petitioner") have established by a preponderance of the evidence that challenged claims 7 and 12 of Patent Owner Aortic Innovations, LLC ("Patent Owner") U.S. Patent No. 10,857,011 B2 (Ex. 1001, "'011 patent") are unpatentable.

A. Procedural History

On September 28, 2021, Petitioner filed its Petition (Paper 1, "Petition") seeking *inter partes* review of claims 1–12 of the '011 patent. Patent Owner timely filed a Preliminary Response. (Paper 7 "Preliminary Response"). Together with its Preliminary Response, Patent Owner filed a Statutory Disclaimer of claims 1–6 and 8–11 of the '011 patent. Prelim. Resp. 1, n.1, 80–81; *see also* Ex. 2011. With our authorization, Petitioner filed a Preliminary Reply and Patent Owner filed a Preliminary Sur-Reply. Paper 10 ("Prelim. Reply"); Paper 12 ("Prelim. Sur-Reply"). On April 1, 2021, and pursuant to 35 U.S.C. § 314, we instituted *inter partes* review of challenged claims 7 and 12 of the '011 patent (Paper 15, "Institution Decision" or "Dec.").

After institution of trial, Patent Owner filed a Response (Paper 23, "PO Resp."), to which Petitioner filed a Reply (Paper 27, "Pet. Reply"), and Patent Owner, in turn, filed a Sur-Reply (Paper 35, "Sur-Reply").

Oral argument was held on December 15, 2022. A transcript of the oral argument is included in the record. (Paper 47, "Hearing Trans.").[1]

B. Related Proceedings

Petitioner identifies as a related matter *Edwards Lifesciences Corp. v. Aortic Innovations LLC*, IPR2021-01527, challenging claims of US 10,792,172 B2 (the "'172 patent"). The '011 patent is a continuation of the '172 patent. Pet. 113–14. We note that two additional *inter partes* review proceedings concerning related patents filed by Petitioner that were conducted in parallel with this *inter partes* review, *Edwards Lifesciences Corp. v. Aortic Innovations LLC*, IPR2022-00034 (over US 10,966,846 B2) and *Edwards Lifesciences Corp. v. Aortic Innovations LLC*, IPR2022-00193 (over US 10,881,538 B2). We also note that an additional *inter partes* review of a related patent has been instituted in *Edwards Lifesciences Corp. v. Aortic Innovations LLC*, IPR2022-00556 (over US 10,987,236 B2).

---

[1] Oral argument was simultaneously heard in this *inter partes* review and in *Edwards Lifesciences Corporation and Edwards Lifesciences LLC v. Aortic Innovations, LLC*, IPR2021-01584, IPR2022-00034 and IPR2022-00193, all of which were conducted in parallel, but not consolidated, with the present proceeding.

C. Real Parties-in-Interest

Petitioner identifies Edwards Lifesciences Corp. and Edwards Lifesciences LLC, as the real parties-in-interest. Pet. 113. Patent Owner identifies Aortic Innovations, LLC as the real party-in-interest. Paper 4, 1. There is no dispute over the real parties-in-interest in this proceeding.

D. The Instituted Grounds of Unpatentability

Petitioner contends that challenged claims 7 and 12 of the ’011 patent are unpatentable, based upon the following grounds, all of which have been instituted in this proceeding:

Ground	Claim(s) Challenged	35 U.S.C. §	Reference(s)/Basis
I	7, 12	103[2]	Spenser[3], Walther
II	7, 12	103	Spenser, Spenser II[4]

[2] The Leahy-Smith America Invents Act, Pub. L. No. 112-29, 125 Stat. 284 (2011) (“AIA”), amended 35 U.S.C. §§ 102 and 103. Because the challenged claims of the ’011 patent have an effective filing date before the effective date of the applicable AIA amendments, we refer to the pre-AIA versions of 35 U.S.C. §§ 102 and 103 this Decision.

[3] Spenser et al. (US 7,510,575 B2, March 31, 2009) (“Spenser”) Ex. 1010.

[4] Spenser et al. (WO 2006/005015 A2, January 12, 2006) (“Spenser II”) Ex. 1028.

Ground	Claim(s) Challenged	35 U.S.C. §	Reference(s)/Basis
III	7, 12	103	Cribier '321[5], Walther[6]
IV	7, 12	103	Cribier '321, Spenser II
V	7, 12	102(e)	Levi[7]
VI	7, 12	103	Levi
VII	7, 12	103	Levi, Walther
VIII	7, 12	103	Levi, Spenser II
IX	7, 12	103	Levi, Cribier '321
X	7, 12	103	Levi, Spenser
XI	7, 12	103	Levi, Cribier '321, Walther
XII	7, 12	103	Levi, Cribier '321, Spenser II
XIII	7, 12	103	Levi, Spenser, Walther
XIV	7, 12	103	Levi, Spenser, Spenser II

Petitioner relies on the Declaration of Nigel Buller, M.D. (Ex. 1003). Patent Owner relies on the Declarations of Stephen J.D. Brecker, M.D.

---

[5] Cribier, (US 7,585,321 B2, September 8, 2009) ("Cribier '321") Ex. 1045.

[6] T. Walther et al., Trans-catheter valve-in-valve implantation: in vitro hydrodynamic performance of the SAPIEN + cloth trans-catheter heart valve in the Carpentier-Edwards Perimount valves, 40 EUR. J. CARDIO-THORACIC SURGERY 1120–26 (2011) ("Walther") Ex. 1007.

[7] Levi et al. (US 9,393,110 B2, July 19, 2016) ("Levi") Ex. 1008.

(Ex. 2002; Ex. 2051). We have reviewed the credentials of Petitioners' declarant, Dr. Buller, and Patent Owner's declarant, Dr. Brecker, and consider both to be qualified to provide the opinions for which their testimony has been submitted. *See* Section II.D.6.a below.

E. The '011 Patent

The '011 patent is entitled "Device for Endovascular Aortic Repair and Method of Using the Same." Ex. 1001, code (54). The '011 patent issued from Appl. No. 16/910,189, which claims priority through a series of continuation and divisional applications to Appl. No. 13/706,896, filed on December 6, 2012. *Id.* at codes (21), (60). The '011 patent also claims priority to Provisional Appl. No. 61/723,446, filed on Nov. 7, 2012, and Provisional Appl. No. 61/567,458, filed on December 6, 2011. *Id.* at code (60).[8]

The '011 patent discloses an endograft device, i.e., a transcatheter heart valve, used for endovascular repair of ascending aortic aneurysms.

---

[8] According to Petitioner, "[d]uring prosecution, Patent Owner stated that the application's 'effective filing date . . . is believed to be based on Provisional Patent Application No. 61/723,446, filed on November 7, 2012.'" Pet. 21 (quoting Ex. 1002, 274). Petitioner asserts that "the '011 patent is not entitled to a priority date of December 6, 2011 because the '458 provisional does not adequately support or enable the '011 patent's claims." *Id.* Because all the asserted references bear a publication or filing date that antedates the earlier priority date of the'458 provisional, we need not address whether the '011 patent claims are entitled to claim priority to

Ex. 1001, col. 2, ll. 43–45. According to the Specification, none of the devices in clinical use for endovascular repair of ascending aortic aneurysms "have been designed with the purpose of endovascular repair of multiple types of ascending aortic aneurysms." *Id.* at col. 2, ll. 28–30. The Specification describes a need for a device "that can treat different anatomical variations of ascending aortic aneurysms, create effective proximal and distal seal zones within the aorta, and have a durable valve component, but that also allows for future valve re-interventions." *Id.* at col. 2, ll. 31–35. The '011 patent states that "[a] device is also needed that would allow for treatment of different coronary anatomical variations among the patient population, allow future coronary re-intervention, but that also avoids coronary compression, and enables treatment of possible paravalvular leaks." *Id.* at col. 2, ll. 35–39.

Both parties agree that the challenged claims in this *inter partes* review relate only to the heart-valve component of the device disclosed by the Specification of the '011 patent. *See* Pet. 2.

---

the '458 provisional. There is no dispute that the asserted references are prior art. *See generally* PO Resp.

Figure 11 of the ’011 patent is reproduced below:

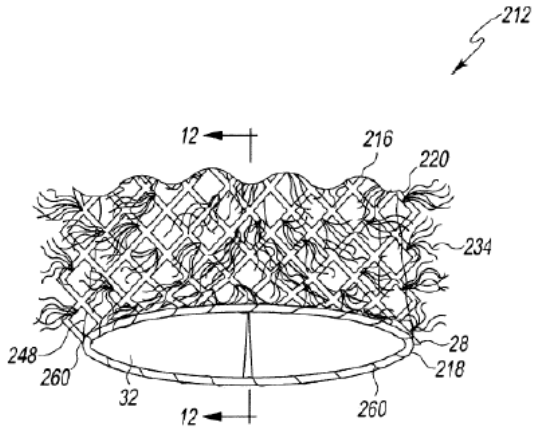

Fig. 11

Figure 11 of the ’011 patent is a perspective view of a proximal end of a prosthetic component 212.

Component 212 includes a dual-frame structure with a circular inner frame 218 secured to circular outer frame 216 (also referred to as “the self-expanding frame 216”) *via* a plurality of stitches 260 (or other fasteners). Ex. 1001, cols. 13–14, ll. 61–6. As depicted above, outer frame 216 is a grid with diagonally oriented lines as compared to the proximal end of the device. The Specification also identifies outer surface 248 of the stent 244, spaced apart from fibers 234, which are attached to outer frame 216. *Id.*

Figure 13 of the ’011 patent is reproduced below:

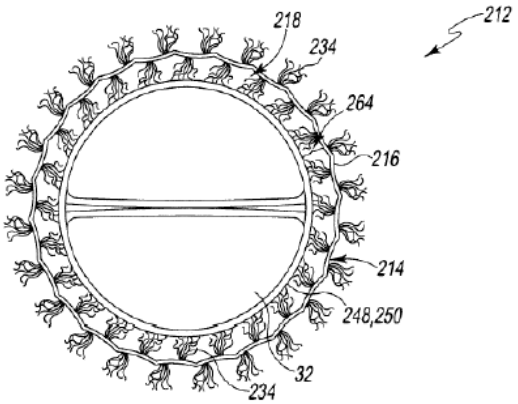

Fig. 13

Figure 13 of the ’011 depicts a plan view of the prosthetic device 212

As illustrated in Figure 13, which is another view of component 212 from a perspective down the barrel of the device, circular dual frame component 214 includes outer frame 216 secured to balloon-expandable inner frame 218. Ex. 1001, col. 13, ll. 26–28. Furthermore, the inner frame 218 houses valve 32. *Id.* at col. 13, ll. 28–29. Fibers 234 extend outwardly and inwardly from outer frame 216. *Id.* at col. 12, ll. 31–41. The Specification states the illustrated embodiment has gap 264 (2–3 mm) between inner 218 and outer 216 frame/outer surface 248 (gap 264 is closed when component 212 is implanted and fibers 234 create a seal between inner 218 and outer frame 216). *Id.* at col. 14, ll. 4–20.

Figures 11 and 13 further illustrate fibers 234 extending outwardly from proximal section 220 and inwardly into the passageway formed by the stent. Ex. 1001, col. 12, ll. 31–36. According to the Specification, these collagen fibers 234 “aid in preventing paravalvular leaks and migration of

the proximal component 212 within the aortic walls." *Id.* at col. 12, ll. 31–34.

The Specification further describes "[b]alloon-expandable frame 218 … as a balloon-expandable tubular stent 244." Ex. 1001, col. 13, ll. 29–31. "[S]tent 244 is tubular and is constructed of a metallic material, such as, nitinol, stainless steel, or other implant grade metallic material, in an open-cell configuration." *Id.* at col. 13, ll. 34–36. "When the inner frame 218 is unexpanded, the outer surface 248 of the stent 244 is spaced apart from the fibers 234 attached to the outer frame 216." *Id.* at col. 14, ll. 1–4, Fig. 13. When inner frame 218 is expanded, outer surface 248 of stent 244 engages fibers 234 through covering material 250, thereby closing gap 264 so that fibers 234 and covering material 250 create a seal between inner frame 218 and outer frame 216. *Id.* at col. 14, ll. 7–20.

F. Representative Claim

Independent claim 12 is representative of the challenged claims and recites:

> 12. An endovascularly deployed heart valve assembly comprising:
>
> an outer frame, wherein the outer frame is formed from a metallic material and defines an open cell configuration;
>
> an inner frame that engages a prosthetic heart valve having prosthetic leaflets, wherein the inner frame includes a cylindrically extending graft covering extending at least partially radially outwardly of the prosthetic

heart valve and radially inwardly of the outer frame for providing sealing to the prosthetic heart valve,

wherein the outer frame is secured to the graft covering by stitching at a proximal end of the graft covering and at a proximal end of the outer frame,

wherein the graft covering extends beyond the proximal end of the outer frame and over the proximal end thereof to cover the proximal end of the outer frame;

a sealing material positioned externally to the outer frame for providing sealing between the outer frame and a patient's anatomical wall to treat paravalvular leaks, wherein the sealing material includes a plurality of radially extending fibers that form a circumferential surface that extends outwardly of the outer frame,

wherein the fibers cover at least two circumferentially extending rows of grids formed in the open cell configuration and the at least two circumferentially extending rows radially overlap with the prosthetic leaflets,

wherein the valve assembly is balloon expandable during endovascular deployment,

wherein expansion of the valve assembly presses the sealing material against native valve leaflets of the patient.

Ex. 1001, col. 22, ll. 12–44.

II. ANALYSIS

A. Level of Ordinary Skill in the Art

Petitioner contends that a person of ordinary skill in the art in November 2012 would have been an interventional cardiologist with a working knowledge of heart valve designs and endovascular prostheses.

Pet. 24. Petitioner asserts that such a skilled artisan would, where necessary, work with a medical device engineer to experiment with or manufacture a prosthetic heart valve. *Id.* (citing Ex. 1003 ¶ 45).

Patent Owner does not expressly challenge Petitioner's definition. We consequently adopt Petitioner's definition of a person of ordinary skill in the art as an interventional cardiologist with a working knowledge of heart valve designs and endovascular prostheses, that would, where necessary, work with a medical device engineer to experiment with or manufacture a prosthetic heart valve. We also find that Petitioner's definition is commensurate with the level of skill reflected in the prior art. *See, e.g.*, Exs. 1006, 1010, 1030, 1033; *see also Okajima v. Bourdeau*, 261 F.3d 1350, 1355 (Fed. Cir. 2001).

B. Claim construction

The Board applies the same claim construction standard that would be used to construe the claim in a civil action under 35 U.S.C. § 282(b). *See* 37 C.F.R. § 100(b) (2020). Under that standard, claim terms "are generally given their ordinary and customary meaning" as understood by a person of ordinary skill in the art at the time of the invention. *Phillips v. AWH Corp.*, 415 F.3d 1303, 1312–13 (Fed. Cir. 2005) (en banc). "In determining the meaning of the disputed claim limitation, we look principally to the intrinsic evidence of record, examining the claim language itself, the written description, and the prosecution history, if in evidence." *DePuy Spine, Inc. v. Medtronic Sofamor Danek, Inc.*, 469 F.3d 1005, 1014 (Fed. Cir. 2006)

(citing *Phillips*, 415 F.3d at 1312–17). Extrinsic evidence is "less significant than the intrinsic record in determining 'the legally operative meaning of claim language.'" *Phillips*, 415 F.3d at 1317 (quoting *C.R. Bard, Inc. v. U.S. Surgical Corp.*, 388 F.3d 858, 862 (Fed. Cir. 2004)).

Petitioner argues that no claim terms require additional construction beyond the *Phillips* "ordinary and customary meaning" standard enunciated above. Pet. 23–24 (citing 37 C.F.R. § 42.100(b); *Phillips*, 415 F.3d 1312–13). Patent Owner does not dispute Petitioner's assertion and we consequently apply the claim terms according to their plain and ordinary meaning without express construction. Should any interpretation of claim meaning or scope be required in analyzing the patentability challenges, we discuss it in the related patentability analysis below.

C. Patentability: Principles of Law

To prevail in its challenges to the patentability of claims 7 and 12 of the '011 patent, Petitioners must demonstrate by a preponderance of the evidence that the claims are unpatentable. 35 U.S.C. § 316(e); 37 C.F.R. § 42.1(d) (2019). "In an [*inter partes* review], the petitioner has the burden from the onset to show with particularity why the patent it challenges is unpatentable." *Harmonic Inc. v. Avid. Tech., Inc.*, 815 F.3d 1356, 1363 (Fed. Cir. 2016); *see also* 35 U.S.C. § 312(a)(3) (2012) (requiring inter partes review petitions to identify "with particularity . . . the evidence that supports the grounds for the challenge to each claim"). That burden of persuasion never shifts to Patent Owner. *Dynamic Drinkware, LLC v. Nat'l*

Graphics, Inc., 800 F.3d 1375, 1378 (Fed. Cir. 2015); *see also In re Magnum Oil Tools Int'l, Ltd.*, 829 F.3d 1364, 1375–78 (Fed. Cir. 2016) (discussing the burden of proof in *inter partes* review).[9]

A claim is unpatentable under 35 U.S.C. § 103 as being obvious if the differences between the claimed subject matter and the prior art are such that the subject matter, as a whole, would have been obvious at the time the invention was made to a person having ordinary skill in the art to which said subject matter pertains. *See KSR Int'l Co. v. Teleflex Inc.*, 550 U.S. 398, 406 (2007). The question of obviousness is resolved on the basis of underlying factual determinations, including (1) the scope and content of the prior art; (2) any differences between the claimed subject matter and the prior art; (3) the level of skill in the art; and (4) where in evidence, so-called secondary considerations. *See Graham v. John Deere Co.*, 383 U.S. 1, 17–18 (1966). We also recognize that prior art references must be "considered together with the knowledge of one of ordinary skill in the pertinent art." *In re Paulsen*, 30 F.3d 1475, 1480 (Fed. Cir. 1994) (citing *In re Samour*, 571 F.2d 559, 562 (C.C.P.A. 1978)).

---

[9] We address certain of Patent Owner's positions in this proceeding as not persuasive. However, we do not shift the ultimate burden of proof from Petitioner and such lack of persuasiveness is in the context of Petitioner's assertions and the evidence of record.

D. Ground II: Obviousness of claims 7 and 12 over Spenser and Spenser II

Ground II of the Petition argues that challenged claims 7[10] and 12 are obvious over Spenser and Spenser II. Pet. 68–17. In our Decision instituting this *inter partes* review, we determined that Petitioner had demonstrated a reasonable likelihood of success in demonstrating that the challenged claims are obvious over these references. *See* Dec. 56.

In its Response, Patent Owner contends, with respect to Ground II, that the claims are not obvious over Spenser and Spenser II because Petitioner fails to demonstrate that any of its proposed prior art combinations disclose or render obvious a valve with a "sealing material" that is delivered "endovascularly." PO Resp. 11. Patent Owner also argues that objective indicia of non-obviousness (also called secondary considerations) support a conclusion that the challenged claims are nonobvious. *Id.* at 1. Finally, Patent Owner contends that the testimony of Petitioner's expert, Dr. Buller, should be given little or no weight, because, Patent Owner argues, he has no expertise in the issues at hand. *Id.* at 70.

---

[10] Claim 7 depends from independent claim 1, which has been disclaimed by Patent Owner. *See* Ex. 2011. We treat claim 7 as incorporating all of the limitations of disclaimed claim 1. *See Monsanto Co. v. Syngenta Seeds, Inc.*, 503 F.3d 1352, 1357 (Fed. Cir. 2007) (holding that "[a] claim in dependent form shall be construed to incorporate by reference all the limitations of the claim to which it refers" (quoting 35 U.S.C § 112, ¶ 4 (2000)).

1. Overview of Spenser (Ex. 1010)

Spenser is a U.S. patent that issued on March 31, 2009. Ex. 1010, codes (10), (12), (45). On its face, Spenser therefore qualifies as prior art under pre-AIA 35 U.S.C. § 102(b) and this is not in dispute in this proceeding. *See generally* PO Resp.

Spenser is directed to a prosthetic valve for cardiac implantation. Ex. 1010, col. 1, ll. 13–15. Figure 44a of Spenser is reproduced below:

FIG. 44a

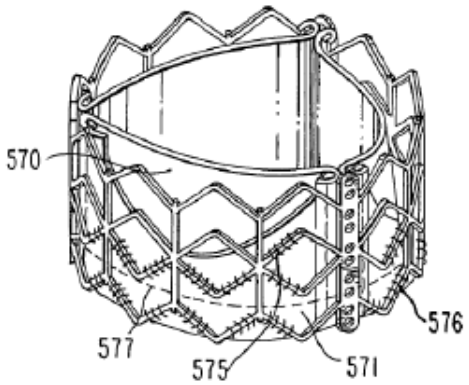

Spenser's Figure 44a illustrates an isometric view of an implantable prosthetic valve with additional pieces of PET used for sealing and protecting the pericardium. *Id.* at col. 11, ll. 32–35. Specifically, Figure 44a illustrates an implantable valve with three pericardial leaflets 570, located within a gridded circular frame 575. *Id.* at col. 26, ll. 30–37.

Figure 44b of Spenser is reproduced below:

FIG. 44b

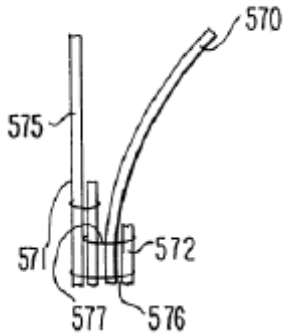

Spenser's Figure 44b illustrates a view of an implantable prosthetic valve including a pre-shaped PET tube and leaflet-tube attachments. Ex. 1010, col. 11, ll. 36–40. Figure 44b illustrates four layers from left to right, including frame 575, PET layer 571, valve leaflet 570, and PET 572. *Id.* at Fig. 44b, col. 26, ll. 40–42. Spenser teaches that:

> PET **571** and **572** are used for connecting pericardial leaflets **570** to frame **575**, while they are assembled in between the leaflets and the frame. A suture **577** connects pericardium leaflet **570** in between two layers of PET, while the inner layer of PET **572** is short and the outer layer is longer. Bottom attachment suture **576**, connects the three layers, the leaflet and both PET layers to the frame and forms a strong sealing line. An upper suture **578** connects the outer PET layer **571** to frame **575**.

Id. at col. 26, ll. 40–48.

2. Overview of Spenser II (Ex. 1011)

Spenser II is a PCT Publication that published on January 12, 2006. Ex. 1011, codes (10), (43). On its face, therefore, Spenser II qualifies as

prior art under pre-AIA 35 U.S.C. § 102(b). This is not disputed. *See generally* PO Resp.

Spenser II is directed to "the prevention, detection, and repair of paravalvular leaks around cardiac valve prostheses." Ex. 1011 ¶ 1. Spenser II teaches that prosthetic valves may be implanted "either through open heart surgery or by use of newer percutaneous methods," but with both methods paravalvular leaks are a known side effect." *Id.* ¶ 11; *see also id.* ¶ 9 (discussing another Spencer reference teaching "crimped devices suitable for catheterization through a body duct to a target location and adapted to be deployed."); *see also* Ex. 1010, Abstract (stating the same for its disclosed invention). Spenser II further notes that "[p]ercutaneous introduction of medical devices is a preferred surgical procedure" and "considered safer and less invasive." Ex. 1011 ¶ 12.

Figure 22 of Spenser II is reproduced below:

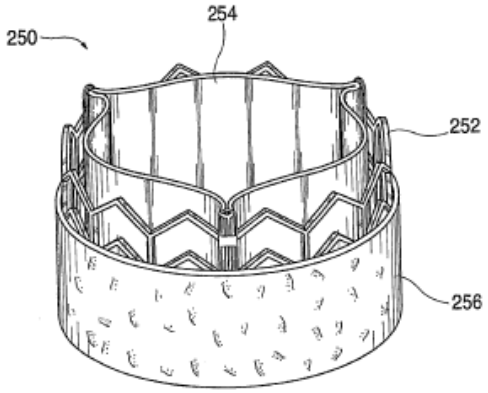

FIG. 22

Spenser II's Figure 22 shows an embodiment including a layer of compressible material, such as a cloth material, along an exterior surface of a stented valve. Ex. 1011 ¶ 85; *see also id.* ¶ 55 (disclosing a preferred

embodiment where a compressible material/fabric of PET is provided with fibers around a stent configured to fill gaps, encourage coagulation of blood, and prevent leakage). Specifically, Figure 22 illustrates stented valve 250 including a circular stent structure 252 surrounding a valvular structure 254. *Id.* at Fig. 22, ¶ 144. "[S]tent structure 252 is preferably made of a deformable material, such as stainless steel, adapted for radial expansion using a balloon catheter. The valvular structure 254 forms three leaflets and is illustrated in the open configuration." *Id.* at ¶ 145. The device further includes circular layer of compressible material 256 surrounding the outside of stent structure 252. *Id.* at Fig. 22, ¶ 145. "The material may extend partially around the stent structure or may extend entirely around the stent structure, such as in the form of a sleeve," and may be formed of PET. *Id.* "[T]he compressible material 256 may resemble a cloth or fabric having small fibers extending from the surface of the material." *Id.* This "compressible material expands after deployment at a treatment site" and "fills the gaps between the stented valve and the surrounding tissue," which "creates a mechanical seal that prevents paravalvular leakage." *Id.* "In one preferred embodiment, the compressible material is formed of polyethylene terephthalate (PET) and has a thickness ranging from about 1 to 5 mm." *Id.*

3. Petitioner's arguments

a. Claim 12

i. Preamble: "An endovascularly deployed heart valve assembly comprising"

Petitioner argues that Spenser discloses a "heart valve assembly" that is endovascularly deployable. Pet. 75 (citing Ex. 1010, col. 1, ll. 13–15, cols. 17–18, ll. 19–43; Ex. 1003 ¶¶ 164–165).

ii. "an outer frame, wherein the outer frame is formed from a metallic material and defines an open cell configuration"

Petitioner, points to Figure 44a of Spenser, reproduced above, arguing that Frame 575 is an outer frame and defines a gridded configuration. Pet. 75 (citing Ex, 1010, col. 19, ll. 5–13, col. 26, ll. 30–34; Ex. 1003 ¶ 168). Petitioner contends that Spenser further discloses that the frame may be made from metallic materials such as "nickel titanium," and that it is an outer frame because it surrounds the prosthetic leaflets and inner graft covering. *Id.* (citing Ex. 1010, col. 12, ll. 28–31; Ex. 1003 ¶ 99).

iii. "an inner frame that engages a prosthetic heart valve having prosthetic leaflets, wherein the inner frame includes a cylindrically extending graft covering extending at least partially radially outwardly of the prosthetic heart valve and radially inwardly of the

outer frame for providing sealing to the prosthetic heart valve"

Petitioner argues that Spenser's Figure 44a (reproduced above) includes an additional piece of PET 571 for "sealing and protecting the pericardium." Pet. 75 (citing Ex. 1010, col. 26, ll. 30–34, Figs. 44a–44c). According to Petitioner, the "pericardium" refers to the prosthetic pericardial leaflets 570, and PET is "polyester" and a "polymer." *Id.* (citing Ex. 1010, col. 26, ll. 30–54, Figs. 44a–b; Ex. 1003 ¶ 170). Petitioner contends that, because Spenser teaches that an inner frame can be a graft covering, Spenser's PET 571 is an inner frame that is a graft covering. *Id.* at 54 (citing Ex. 1003 ¶ 171).

Pointing again to Figure 44a of Spenser, Petitioner asserts that the PET 571 extends around and houses the pericardial leaflets 570 (i.e., prosthetic heart valve) for providing sealing to the heart valve (i.e., pericardium). Pet. 75 (citing Ex. 1010, col. 26, ll. 30–34, Fig. 44a; Ex. 1003 ¶ 172).

Petitioner contends that Spenser's Figure 44a also includes pericardial leaflets 570, which are prosthetic leaflets. Pet. 75 (citing Ex. 1010, col. 26, ll. 30–54; Ex. 1003 ¶ 184). Petitioner also notes that claim 12 requires an inner frame that "*includes* a cylindrically extending graft covering," whereas claim 1 recites that the inner frame "*is* a cylindrically extending graft covering." *Id.* at 75–76. Petitioner points out that Patent Owner added claim 12 near the end of prosecution, so there is little discussion of the change from "is" to "includes." *Id.* at 76. Petitioner asserts that Patent

Owner did not identify the change as introducing any "further limitations," as it did with other limitations. *Id.* (citing Ex. 1002, 96.)

iv. "wherein the outer frame is secured to the graft covering by stitching at a proximal end of the graft covering and at a proximal end of the outer frame"

Spenser discloses that a "[b]ottom attachment suture 576, connects the three layers, the leaflet and both PET layers [571, 572] to the frame and forms a strong sealing line." Pet. 76 (citing Ex. 1010, col. 26, ll. 45–47, Figs. 44a–44c; claims 10, 30). Petitioner points to Figure 44a as disclosing that the sutures secure the PET (graft covering) to the outer frame with a plurality of stitches. *Id.* (citing Ex, 1010 Fig. 44a-44b; Ex. 1003, ¶¶ 173–175).

v. "wherein the graft covering extends beyond the proximal end of the outer frame and over the proximal end thereof to cover the proximal end of the outer frame"

Petitioner contends that Spenser discloses that a "portion of the valve assembly 34 at an inlet zone 45 is optionally rolled over support stent 32 at the inlet, making up a rolled sleeve, which enhances the sealing of the device at the valve inlet." Pet. 77 (Ex. 1010, col. 14, ll. 6–9, Fig. 2; col. 12, ll. 5–53). Petitioner argues that a person of ordinary skill in the art would have found it obvious to apply this feature to Figure 44a of Spenser and extend Figure 44a's inner PET 571 over the proximal end of the frame 575. *Id.*

(Ex. 1003 ¶ 111). Furthermore, argues Petitioner, a skilled artisan would have been motivated to extend PET 571 to further "enhance[] the sealing of the device at the valve inlet," and would have understood that extending th inner PET fabric over the proximal end of the frame 575 would prevent blood from leaking between the inner PET 571 and the frame 575. *Id.* (citing Ex. 1003 ¶ 111).

vi. "a sealing material positioned externally to the outer frame for providing sealing between the outer frame and a patient's anatomical wall to treat paravalvular leaks, wherein the sealing material includes a plurality of radially extending fibers that form a circumferential surface that extends outwardly of the outer frame"

Petitioner relies upon Spenser II as teaching this limitation. Pet. 44 (citing (Ex. 1003 ¶ 133). Pointing to Figure 22 of Spenser II, Petitioner argues that Spenser II teaches that "[t]o reduce or prevent paravalvular leakage, a layer of compressible material 256 is disposed along an outer surface of the stent structure 252." *Id.* (citing (Ex. 1011 ¶ 145, Fig. 22). Figure 22 of Spenser II is again reproduced below:

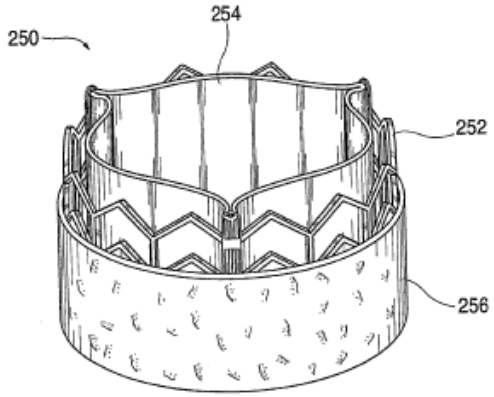

FIG. 22

Figure 22 depicts a perspective view of Spenser II's TAVR with an out covering of compressible cloth

Petitioner argues that Spenser II's compressible material "may resemble a cloth or fabric having small fibers extending from the surface of the material." Pet. 44–46, 77 (citing Ex. 1011 ¶ 145, Fig. 22; Ex. 1003 ¶¶ 133, 136–137). Petitioner contends that Spenser II further discloses that the compressible material expands upon implantation and "fills the gaps between the stented valve and the surrounding tissue," which "creates a mechanical seal that prevents paravalvular leakage." *Id.* (citing Ex. 1003 ¶ 133).

According to Petitioner, a person of ordinary skill in the art would have been motivated to combine Spenser II's compressible material with Spenser's Figure 44a because: (1) Spenser and Spenser II are from the same field of endeavor and teach prosthetic valves suitable for transcatheter delivery; (2) the references share three common inventors, and Spenser II expressly cites Spenser's parent application; and (3) a skilled artisan would have been motivated to combine Spenser II's compressible material with

Figure 44a to "address leaks that can occur around the implanted valve" and "to encourage coagulation of blood to further fill the gaps and prevent leakage." Pet. 45–46, 59 (citing Ex. 1010, Abstr., col. 2, ll. 5–15; Ex. 1011, Abstr., ¶¶ 1, 9, 10–14, 145; Ex. 1003 ¶¶ 136–137, 185–186).

Additionally, Petitioner notes that Spenser and Spenser II are closely related patents, sharing three common inventors, and Spenser II explicitly references Spenser's parent application, U.S. Appl. Ser. No. 2003/0153974 Pet. 45–46, 77 (citing Ex. 1015; Ex. 1011 ¶ 9; Ex. 1003 ¶¶ 135–137). Given the close relationship, argues Petitioner, a person of skill in the art would have reasonably expected that features described in one patent would apply to the other. *Id.* (citing Ex. 1003 ¶ 135).

vii. "wherein the fibers cover at least two circumferentially extending rows of grids formed in the open cell configuration and the at least two circumferentially extending rows radially overlap with the prosthetic leaflets"

Petitioner contends that Spenser II's compressible material, when added to the valve in Spenser, would cover the bottom two rows of grids. Pet. 48. Petitioner points to Figure 22 of Spenser II, in which the compressible material is depicted as covering the bottom two rows of cells formed by stent structure 252:

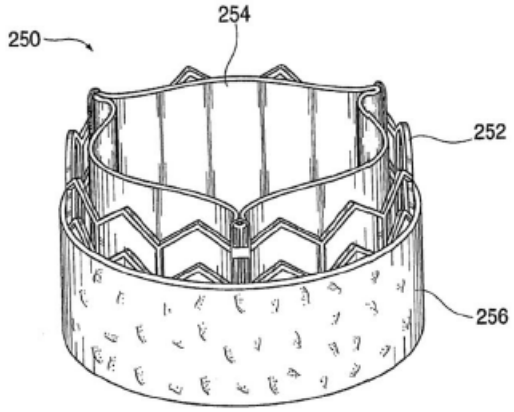

FIG. 22

Id. at 48–49 (citing Ex. 1003 ¶ 142). Petitioner argues that, if this limitation should be construed as requiring the fibers to *entirely* cover two rows of grids, a person of ordinary skill in the art would have found it obvious to increase the height of Spenser II's compressible material. *Id.* at 49 (citing Ex. 1003 ¶ 144).

Additionally, argues Petitioner, the two circumferentially extending rows covered by the cloth/material would radially overlap with the prosthetic leaflets. Pet. 77 (Ex. 1003 ¶¶191, 265). Petitioner points to Spenser's Figure 44a, which depicts the bottom two rows of the frame radially overlapping with the prosthetic leaflets:

FIG. 44a

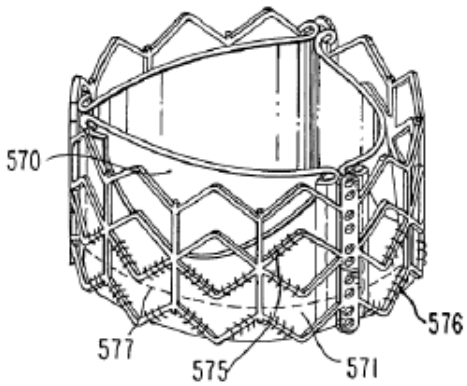

Id.

viii. "wherein the valve assembly is balloon expandable during endovascular deployment"

Petitioner argues that Spenser discloses that the valve shown in Figure 44a "resembles the valve shown in Fig. 43." Pet. 79 (citing Ex. 1010, col. 26, ll. 34–35). Petitioner notes that Spenser teaches that the valve shown in Figure 43 may be "inflated by a balloon[.]" *Id.* (citing Ex.1010, col. 26, ll. 19–22). Therefore, Petitioner asserts, the valve depicted in Spenser's Figure 44a is balloon expandable. *Id.* (citing Ex. 1003 ¶ 146).

ix. "wherein expansion of the valve assembly presses the sealing material against native valve leaflets of the patient"

Petitioner argues that Spenser's Figure 4 illustrates the valve deployed "in a natural aortic valve position in accordance with the present invention." Pet. 79. Figure 4 of Spenser is reproduced below:

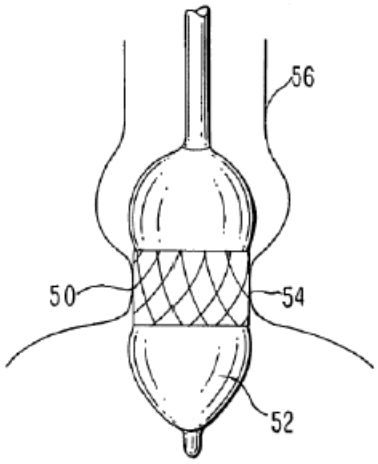

Figure 4 of Spenser depicts a TAVR deployed valve deployment in a natural aortic valve position

Id. (citing Ex. 1010, col. 8, ll. 66–67, col. 14, ll. 15–20, cols. 5–6, ll. 17–36, cols. 17–18:19–43, Figs. 17a–17b). According to Petitioner, Figure 4 shows the valve pressing against the patient's aortic annulus. *Id.* Petitioner contends that, although not shown in Figure 4, a person of ordinary skill in the art would have understood that the valve also presses against the patient's native aortic leaflets, which are attached to the annulus and extend distally. *Id.* (citing Ex. 1003 ¶¶ 48–51, 178).

Petitioner contends that Spenser II's compressible material would cover at least the two proximal rows of Figure 44's outer frame. Pet. 79 (citing Section II.D.3.vii above). Petitioner argues that expanding Figure 44a of Spenser would cause at least a portion of the proximal two rows to press against the patient's native aortic leaflets. *Id.* (citing Ex. 1003 ¶ 179). Therefore, reasons Petitioner, expansion of Figure 44a would press Spenser II's compressible material against the patient's native aortic leaflets. *Id.*

Based on Petitioner's assertions discussed above we find Petitioner has accounted for each element of claim 12 in the asserted prior art.

b. Claim 7

Challenged claim 7 of the '011 patent depends from disclaimed claim 1, which recites limitations that are substantially the same as limitations i–vii of claim 12, as described in the preceding section. *See generally* Pet. 60–64.Petitioner points to the same evidence to support its arguments that these limitations are taught by the combination of Spencer and Spencer II. *See* Pet. If so we should note that here Claim 7 incorporates the limitations of claim 1, and recites: "The valve assembly of claim 1, wherein the valve assembly is delivered endovascularly." Ex. 1001, col. 21, ll. 42–43.

Petitioner points to Spenser's disclosure that:

> An aspect of the present invention deals with the possibility of implanting the valve percutaneously, i.e., inserting the valve assembly on a delivery device similar to a catheter, then implanting the valve at the desired location *via a large blood vessel such as the femoral artery*, in a procedure similar to other known interventional cardiovascular procedures.

Pet. 60 (quoting Ex. 1010, col. 2, ll. 6–12) (emphases added).

Petitioner contends that Spenser also teaches endovascular implantation of the prosthetic valve in a patient's native aortic valve using a balloon catheter that is guided through the patient's vasculature to the patient's native aortic valve. Pet. 60–61 (citing Ex. 1010, cols. 5–6, ll. 17–36, cols. 17–18, ll. 19–43; Ex. 1003 ¶ 207).

Petitioner contends that a person of ordinary skill in the art would have understood and been aware that Petitioner's SAPIEN valve (a commercial embodiment of a TAVR) had been successfully delivered through at least the common iliac and femoral arteries.[11] Pet. 61 (citing Ex. 1043, 273). According to Petitioner, the common iliac artery provided an alternative to the femoral artery in cases where the femoral artery was too small or calcified for safe delivery. *Id.* (citing Ex. 1043, 275; Ex. 1003 ¶¶ 165, 243).

Petitioner argues that a person of ordinary skill in the art would have had a reasonable expectation that the prosthetic heart valves taught by Spenser, combined with Spenser II's compressible material, would be suitable for endovascular delivery. Pet. 61 (citing Ex. 1003 ¶¶ 165, 243). According to Petitioner, it had been demonstrated by 2012 that devices not suitable for delivery through smaller blood vessels could still be endovascularly delivered to the heart through the common iliac artery. *Id.* (citing Ex. 1043; Ex. 1003 ¶¶ 165, 243). Petitioner also contends that a skilled artisan would have reasonably expected that the prosthetic heart valve depicted in Spenser's Figure 44a, and having Spenser II's compressible material would have been deliverable through this route. *Id.* (citing Ex. 1003 ¶ 165).

---

[11] Petitioner also identifies that Patent Owner has asserted that the SAPIEN 3 Ultra product is "covered by the claimed invention," i.e., it infringes the claims. *See* Pet. 76; *see also* PO Resp. 5 (indicating the same).

Similarly, Petitioner asserts, those of skill in the art would have had access to a range of suitable cloths having varying thicknesses and densities, and would have been able to select an appropriately dimensioned cloth for delivery through a selected blood vessel. *Id.* (citing Ex. 1003 ¶¶ 166, 244). Petitioner contends that, by 2012, Petitioner had developed delivery systems having smaller diameters than those initially used with Petitioner's SAPIEN valve. *Id.* (citing Ex. 1036, 295–97; Ex. 1037 ¶¶ 5–6). At the same time, argues Petitioner, it had developed a variety of ways to adapt a heart valve's outer frame and leaflets to create additional space for an outer cloth. *Id.* (citing, e.g., Ex. 1008, col. 6, ll. 31–49, cols. 16–17, ll. 24–18; Ex 1003 ¶¶ 166, 244). According to Petitioner, if a procedure required a smaller valve, persons of ordinary skill in the art would have found it obvious to utilize one or more of these known techniques to combine Spenser II's compressible material with the prosthetic heart valve of Spenser for endovascular delivery. *Id.* (citing Ex. 1003 ¶¶ 166, 244).

Finally, argues Petitioner, Spenser teaches that the "maximal size of a catheter inserted into the femoral artery should be no more than 8 mm in diameter," and that its prosthetic heart valve "has the ability to change its diameter from about 4 mm to about 25 mm." Pet. 63 (quoting Ex. 1010, col. 27–28, ll. 65–2). Petitioner also points to Spenser II's teaching that the compressible material can have "a thickness ranging from about 1 to 5 mm." *Id.* (citing Ex. 1011 ¶ 145). Petitioner asserts that a skilled artisan would have reasonably expected that adding a compressible material 1 mm thick to

Spenser's 4 mm valve would have resulted in a device suitable for endovascular delivery through the femoral artery. *Id.* (Ex. 1003 ¶ 167).

4. Patent Owner's Response

In its Response, Patent Owner argues that Petitioner has failed to demonstrate that any of its proposed combinations disclose or render obvious a valve with a "sealing material" that is delivered "endovascularly." PO Resp. 11. Patent Owner asserts that the '011 patent teaches a solution to this problem by disclosing a relatively sparse distribution of radially extending fibers engaged with the outer frame, allowing for a small crimp profile while still creating a seal. *Id.* (citing Ex. 1001, col. 12, ll. 31–34).

Patent Owner contends that Petitioner has failed to prove that Spenser II's outer covering would be endovascularly-deliverable when combined with Spenser. PO Resp. 13. Further, argues Patent Owner, even if Petitioner's combinations could be endovascularly-deliverable, Petitioner fails to prove that a person of ordinary skill in the art would have been motivated to make them. *Id.* Patent Owner also urges us to discount the testimony of Petitioner's expert, Dr. Buller, because he allegedly failed to recognize the obvious distinctions between the Patent's sealing material and Spenser II's covering. *Id.* Patent Owner also argues that evidence of objective indicia supports a finding that the challenged claims are not obvious over the cited prior art. *Id.* at 1.

a. "Endovascularly deliverable"

First, Patent Owner argues Petitioner fails to prove that the combined invention of Spenser and Spenser II could be endovascularly delivered, noting that Petitioner does not provide a crimp profile for the resulting device of its combination. PO Resp. 14 (citing Pet. 39–42, 68–71, 96–98). Acknowledging that Petitioner argues the notion of delivery *via* the common iliac artery, Patent Owner asserts that Petitioner nevertheless fails to prove that even the common iliac artery in patients who need TAVR[12], many of whom suffer from vascular disease, could accommodate a larger delivery sheath. *Id.* at 14–15.

Patent Owner argues further that there is no reason to assume that Petitioner's combination incorporating Spenser II's thick outer covering onto Spenser's TAVR could be endovascularly delivered. PO Resp. 15. According to Patent Owner, there is no evidence that the common iliac artery would accommodate the combination of Spenser and Spenser II. *Id.* at 15–16.

Patent Owner next points to the prior art Walther reference, which also teaches an outer cloth covering for a TAVR. *See* Ex. 1007, 1020–21. Patent Owner argues that the evidence shows that a TAVR with a Walther-

---

[12] Throughout this Decision, we use TAVR to refer to both the procedure and to the prosthetic heart valve replacement device.

like outer cloth would require a 33F sheath, which exceeds the 24F[13] maximum diameter required for transfemoral delivery. PO Resp. 16. Patent Owner asserts that there is no evidence that any such large sheath could be delivered endovascularly by any route. *Id.* Patent Owner also points to Cheung,[14] which, Dr. Brecker testifies, teaches transapical delivery (i.e., non-endovascular delivery[15]) of a Spenser-like device with a Walther-like outer covering, and which required a 33F catheter for delivery. *Id.* at 18–19 (citing Ex. 2051 ¶ 91–92). Dr. Brecker further opines that: "Given the manifest similarities between Walther, Cheung, and Spenser-II, a POSITA would expect Spenser-II's Figure 22 to also have a large crimp profile." *Id.* at 19 (quoting Ex. 2051 ¶ 93). Patent Owner also notes that Petitioner's expert, Dr. Buller, acknowledged at his deposition that he was not aware of any TAVR with an outer cloth like the ones seen in Walther or Spenser II's

---

[13] "F" or "French" is a universal measure of catheter gauge or diameter. 1F = 1/3 mm. *See, e.g.*, 180° Medical, *Figuring Out French Sizes: Urinary Catheter Sizes*, *available at*: https://www.180medical.com/blog/ figuring-out-french-sizes/ (last visited March 21, 2022).

[14] A. Cheung et al., *Transapical Transcatheter Mitral Valve-in-Valve Implantation in a Human*, 87 ANN. THORAC. SURG. e18–20 (2009) ("Cheung") Ex. 1017.

[15] In a transapical approach, a small incision is made in the apex (ventral tip) of the heart and the valve is inserted upwards through the ventricular and atrial chambers into the aortic valve. *See* Ex. 1017, Fig. 1. Because this approach does not require passage of the TAVR through the lumen of any blood vessel, it is not considered "endovascular."

Figure 22 being delivered transfemorally or *via* the common iliac. *Id.* at 20 (citing Ex. 2052, 105, 107–08).

Patent Owner further argues that Petitioner also fails to account for bunching of the material. PO Resp. 21. Petitioner asserts that Dr. Buller did not know whether Walther would bunch, and contends that his speculation that Walther's cloth would have minimal bunching is insufficient as evidence to support a conclusion of obviousness. *Id.* (citing Ex. 2052, 104). Patent Owner contends that Dr. Brecker takes a contrary position, opining that it was well-known in the art that the Walther cloth would "bunch" significantly, which would substantially impact Spenser II's crimp profile. *Id.* at 21–26. According to Patent Owner, Spenser II describes a compressible material that is 1–5 mm thick, and Spenser teaches a valve that has a diameter of 25–26 mm when expanded. *Id.* at 26 (citing Ex. 1011 ¶ 145; Ex. 1010, col. 27–28, ll. 67–2). Dr. Brecker accordingly calculates that:

> Spenser's valve with Spenser-II's outer cloth would have a diameter of at least 10.96 mm (when the valve is crimped and the cloth uncompressed)—similar to Walther's 11 mm delivery—over 36% too large for transfemoral delivery and endovascular delivery more generally … this is a rough conservative estimate that likely underestimates the effects of the bulging shown in

> Russell[16]. This effect therefore will counteract the effect of compressibility.

Id. (quoting Ex. 2051 ¶¶ 97, 60–63 (citations omitted)). Dr. Brecker calculates that, because the crimp profile of the valve without the cloth is 4 mm, Spenser II's 1 mm thick cloth (in its expanded state) would add approximately 7 mm (10.96 mm minus 4 mm) to the crimped diameter, without accounting for bunching, bulging, and compression. *Id.* (citing Ex. 2051 ¶ 98). Patent Owner asserts that both Petitioner's and Patent Owner's experts agree that Spenser II's 1–5 mm range is in the expanded state, which is consistent with Dr. Brecker's calculations. *Id.* at 27 (citing Ex. 2051 ¶¶ 99–100; Ex. 2052, 217–18; Ex. 1011 ¶ 145).

Patent Owner argues that the only endovascularly-deliverable TAVR with an outer covering that Petitioner has identified in the prior art is Levi. PO Resp. 28 (citing Ex. 2052, 19, 225). Dr. Brecker calculates that Levi's outer skirt is roughly approximately 10–52x thinner than Spenser II's compressible material and approximately 21x thinner than Walther's outer cloth. *Id.* (citing Ex. 2051 ¶¶ 101–104). This, according to Patent Owner, confirms that a TAVR with a thick, bulky Spenser II-like outer covering could not be endovascularly-delivered. *Id.*

---

[16] H.M. Russell et al., *Open Atrial Transcatheter Mitral Valve Replacement in Patients With Mitral Annular Calcification*, 72(13) J AMER. COLL. CARDIOL. 1437–48 (2018) ("Russell") Ex. 2009.

Patent Owner disputes Petitioner's argument that a person of ordinary skill in the art would have been able to deliver a TAVR covered in Spenser II's outer covering *via* the common iliac artery. PO Resp. 30 (citing, e.g., Pet. 39–40, 68–69, 96–97). Patent Owner asserts that Petitioner relies principally upon Kainuma as evidence of a TAVR ever being delivered endovascularly *via* the common iliac. *Id.* (citing Ex. 1043; Ex. 2052, 57). However, Patent Owner argues, Kainuma provides no support for Petitioner's position that the common iliac could accommodate delivery of a TAVR with a Spenser II-like outer cloth. *Id.* Patent Owner notes that Kainuma teaches the use of a 22F arterial sheath, less than the 24F limit for transfemoral delivery. *Id.* at 30–31 (citing Ex. 1043, 274; Ex. 2052, 31). Patent Owner asserts that Kainuma does not suggest a larger sheath would be appropriate and notes that the 22F delivery sheath used for the common iliac is the same sheath Kainuma recommends for transfemoral delivery. *Id.* at 31 (citing Ex. 2052, 32, 34; Ex. 1043, 275).

Patent Owner also notes that Petitioner's expert, Dr. Buller, cites to Criado,[17] which teaches a TEVAR ("thoracic endovascular aortic repair"), and not a TAVR ("transcatheter aortic valve replacement") which Patent Owner contends is a distinct procedure. PO Resp. 31 (citing Ex. 1044; Ex. 1003 ¶ 125). According to Patent Owner, Criado teaches introduction of

---

[17] F.J. Criado, *Iliac Arterial Conduits for Endovascular Access: Technical Considerations*, 14 J. ENDOVASC. THER. 347–51 (2007) ("Criado") Ex. 1044.

a Gore TAG endograft which has a delivery profile of 20–24F, and notes that any sheath at or above 22F is a "large-bore sheath." *Id.* (citing Ex. 1044, 347; Ex. 2065). Criado, argues Patent Owner, therefore does not concern TAVRs and does not teach or suggest the 24F upper limit for transfemoral delivery may be exceeded *via* the common iliac. *Id.*

Patent Owner contends that Petitioner does not present evidence that it ever sought approval to deliver a SAPIEN (or other TAVR) *via* the common iliac. PO Resp. 33 (citing Ex. 2052, 27). Patent Owner asserts that delivery *via* the common iliac is significantly more invasive than transfemoral delivery, and that both experts agree that a surgery to access the common iliac carries risks of vascular injury, infection, vessel rupture, bleeding, renal failure and more. *Id.* (citing Ex. 2051 ¶ 69; Ex. 2052, 27–28, 44, 57, 59, 61–62, 69). By contrast, Patent Owner argues, a transfemoral delivery does not require surgery and can be performed with a simple incision under local anesthesia. *Id.* (citing Ex. 2052, 13–14, 203; Ex. 2051 ¶ 105).

b. Motivation to combine

Patent Owner also disputes Petitioner's position that a person of ordinary skill in the art would be motivated and able to modify Spenser II's outer cloth to arrive at an endovascularly-deliverable combination. PO Resp. 34. Patent Owner argues that there was a long-felt need for an endovascularly-deliverable TAVR that had sealing material that adequately addressed paravalvular leakage ("PVL"). *Id.* (*see* Section II.D.4.c below). Patent Owner asserts that Petitioner's unspecified modifications are

unproven, hindsight-driven, and are not shown to satisfy the claims as a whole. *Id.*

Furthermore, argues Patent Owner, even if Petitioner's position could be accepted, Petitioner has not explained why the resulting, unspecified modification, would meet the claim as a whole. *Id.* at 37. Patent Owner argues further that Petitioner fails to prove that its modifications could be made with a reasonable likelihood of success. *Id.* at 38. Patent Owner points to Dr. Buller's testimony that it was known since the early 1990s that a seal could address PVL. *Id.* at 38 (citing Ex. 2052, 20). However, Patent Owner argues, Petitioner does not identify one instance of an endovascularly-deliverable TAVR with an outer cloth like that of Spenser II. *Id.*

To the contrary, Patent Owner argues, a skilled artisan would not have been motivated to add Spenser II's outer cloth to a TAVR meant for endovascular delivery. PO Resp. 38. Patent Owner points to Dr. Brecker's testimony that:

> Even if a TAVR with Walther's or Spenser-II's outer cloth could, somehow, be endovascularly delivered, I do not believe a POSITA would have been motivated to make such a combination in 2012, as by any measure this would have significantly increased the crimp profile. The entire premise of TAVR was to make a percutaneous procedure that was minimally invasive and would provide a life-saving alternative for inoperable patients.
>
> In 2012, POSITAs were interested in decreasing the crimp profile as much as possible, and a major thrust of design development was with this intention. Edwards' second-generation device, the SAPIEN XT (available in Europe in 2010)

> reduced the delivery profile from SAPIEN's 22-24F to 16-18F (interior diameter), as a large crimp profile was "one of the major concerns regarding vascular related complications." The notion that a design development which substantially increased crimp profile (using Walther or Spenser II outer cloth, even if it could be at the limits of endovascular delivery), would gain traction, is fanciful.
>
> ….
>
> Petitioner and Dr. Buller do not explain why a POSITA would add Walther or Spenser II's bulky outer cloth to a TAVR meant to be endovascularly deliverable. Even if we assume these combinations were, somehow, endovascularly-deliverable, they would be just barely so and, if Petitioner's arguments are to be believed, may have to be made via an invasive common iliac surgery—the very thing TAVR sought to avoid. Petitioner, quite simply, does not explain why a POSITA would take this route. Petitioner does not argue that adding Walther's or Spenser-II's outer cloth would somehow improve the crimp profile or better reduce PVL over Levi's solution. I do not see why a POSITA would be motivated to do such a thing. As someone who was actively undertaking TAVR procedures in 2012, I can state as a fact that any new device which had a substantially increased profile, would be regarded negatively. The combinations seem driven by hindsight.

Id. at 38–40 (quoting Ex. 2051 ¶¶ 107-110).

c. Objective indicia of nonobviousness

Finally, Patent Owner argues that, as it pointed out during prosecution of related US patent 10,966,846 B2 (the "'846 patent"), TAVR design is subject to competing requirements: "The TAVR must ... provide sealing characteristics to reduce PVL and PVR, yet, must maintain a small overall

crimped profile as the compressed TAVR must be delivered endovascularly." PO Resp. 2 (quoting Ex. 2076, 133, 134). Patent Owner asserts that Edwards' second-generation TAVR product (SAPIEN XT), with no outer covering, had a delivery diameter (i.e., in its crimped configuration) of 16–18F, less than the maximum permissible diameter of 24F for transfemoral insertion. *Id.* at 3.

At the same time, relates Patent Owner, concerns over PVL became significantly more pronounced. PO Resp. 3 (citing Ex. 2068, 859; Ex. 2069 1; Ex. 2052, 231). There was, Patent Owner argues, therefore a "long-felt need" to reduce PVL while maintaining a small valve profile. *Id.* (citing Ex. 2076, 135, 136, Ex. 2052 178–179, 180–181). Patent Owner acknowledges that some outer sealing materials were known, but contends they were inadequate. *Id.* at 4. Patent Owner contends that the "thick outer cloth" taught by Walther, Cheung, and Spenser II had a thick outer cloth unsuitable for endovascular delivery, requiring a 33F sheath. *Id.* Patent Owner contends that the increased diameter of sheaths used to introduce devices like Walther, which were used in transapical approaches, represented a major limitation. *Id.* at 5 (citing Ex. 2058, 217; Ex. 2049, 278; Ex. 2052, 82).

Patent Owner argues that its claimed device provided a solution to this intractable problem through a combination of features. PO Resp. 6 (citing Ex. 1002, 277). Patent Owner points to the testimony of Dr. Brecker, who states that:

> The specification discloses an outer frame that has … sealing material comprised of radially or outwardly extending fibers. The fibers are sparsely distributed.… The fibers form a seal upon compression in *in vivo* implantation.
>
> …
>
> It is counter-intuitive that a sparse distribution of fibers as taught could create a seal. I had not seen any prior art TAVR with this arrangement of fibers. Similarly, Dr. Buller was unaware of any stent with fibers like those present in the Patent's figures.

Id. at 7–11 (quoting Ex. 2052 ¶ 37–40).

d. The weight accorded Dr. Buller's testimony

Patent Owner argues that the testimony of Petitioner's expert, Dr. Buller, should be discounted because his deposition testimony was allegedly implausible on significant matters. PO Resp. 48. Patent Owner asserts that, although Dr. Buller conceded that he had not seen a TAVR or stent with a distribution of fibers like those depicted in the '011 Patent, he refused to acknowledge that the sealing material depicted in the Patent's Figures are distinct from the outer coverings shown in Spenser II. *Id.* at 49. Patent Owner argues that Dr. Buller's testimony in this respect is not credible. *Id.*

Patent Owner notes that both parties' experts agree that the Specification of the '011 patent discloses sealing material formed of relatively sparse distribution of radially extending fibers that was unlike any they had seen in the prior art. PO Resp. 49 (citing Ex. 2051 ¶ 39; Ex. 2052, 167–69. Patent Owner specifically points to Dr. Buller's testimony that "I

can't think of a diagram in a patent that looks like [Fig. 9 of the '011 patent]" and "I don't remember" any patent, reference, product, or prototype "that looks like Figure 9, no." *Id.* (quoting Ex. 2052, 167–69). According to Patent Owner, Dr. Buller thus admits that the distribution of fibers in the Patent's figures, like Figure 9, was novel. *Id.*

Patent Owner asserts that the sparse distribution of fibers in Figure 9 of the '011 patent, through which the outer frame is visible, looks nothing like the thick, opaque outer coverings Spenser II or Cheung, and that these differences are material when the crimp profile is in question. PO Resp. 51. Patent Owner contends, however, that Dr. Buller refused to admit that the prior art outer coverings are opaque relative to the frame. *Id.* at 51 (citing Ex. 2052, 155, 156–57, 160).

Furthermore, argues Patent Owner, Dr. Buller then testified that Figure 22 of Spenser II "shows exactly the same thing" as depicted in Figure 9, and that the two are "conceptually the same." *Id.* at 52 (quoting Ex. 2052, 157–59). For the reader's convenience, a side-by-side comparison of Figure 9 of the '011 patent and Figure 22 of Spenser II is reproduced below:

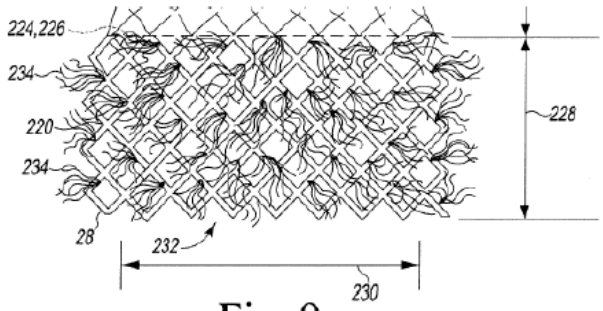

Fig. 9

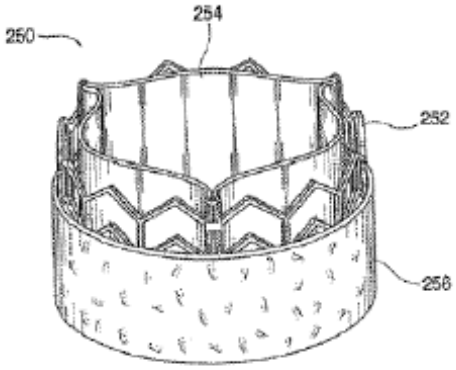

FIG. 22

Figure 9 of the ’011 patent (left) and Figure 22 of Spenser II (right) depict embodiments of their respectively claimed inventions

Patent Owner asserts that Dr. Buller’s testimony is therefore not credible in this respect.

Patent Owner argues further that Dr. Buller is not qualified to opine as an expert with respect to TAVR. PO Resp. 72. According to Patent Owner, Dr. Buller has never: (1) implanted a TAVR in a human being or animal; (2) conducted research or published a paper on TAVR; (3) designed a TAVR or a covering therefor; (4) retired from performing surgical procedures in 2008, and has not since implanted any stent. *Id.* at 72–73 (citing Ex. 2052, 248–250). Patent Owner alleges that Dr. Buller therefore had no understanding of the issues confronting those who design and/or implant TAVRs during the relevant time. *Id.* at 73 (citing Ex. 2052, 74–76). Patent Owner contrasts Dr. Buller with its own expert, Dr. Brecker, whom Patent Owner argues has performed over 1,300 TAVR procedures, and had published over a dozen TAVR-related articles by 2012. *Id.* at 73 (citing Ex. 2051 ¶¶ 8, 11; Ex. 2052, 46–47).

Patent Owner further contends that Dr. Buller is not a person of ordinary skill in the art, and his testimony, therefore, should not be given any weight. PO Resp. 74 (citing *Kyocera Senco Indus. Tools, Inc. v. ITC*, 22 F.4th 1369, 1376–77 (Fed. Cir. 2022). Pointing to Petitioner’s definition of a person of ordinary skill in the art, Patent Owner points out that Dr. Buller retired from undertaking procedures in 2008 and was not therefore a

practicing interventional cardiologist or a person of ordinary skill in the art. *Id.* at 77.

5. Petitioner's Reply

a. "Sparse fibers"

In response, Petitioner argues that Patent Owner's arguments improperly rely on unclaimed and undisclosed features that cannot form the basis for finding the '011 patent nonobvious. Pet. Reply (citing *Smith & Nephew, Inc. v. Rea*, 721 F.3d 1371, 1381 (Fed. Cir. 2013)). According to Petitioner, Patent Owner contends that endovascularly-deliverable THVs with outer seals comprised of outwardly extending fibers to prevent PVL were unknown in the prior art, and that combinations of prior art seals and THVs would have been inoperable for endovascular delivery. *Id.* at 2–3 (citing PO Resp. 11–14). Petitioner argues that Patent Owner contends that an endovascularly-deliverable valve was only possible by using an outer seal with a "sparse distribution of fibers." *Id.* at 3 (citing PO Resp. 1, 6–12, 49–50; Ex. 2051 ¶ 39).

Petitioner, however, points out that the '011 patent neither claims nor discloses an outer seal with a "sparse distribution of fibers," and in fact, does not claim or disclose any sizing, density, or arrangement of fibers. Pet. Reply 3. Rather, argues Petitioner, even the '011 Specification describes only that the fibers are "attached" to the frame. *Id.* (citing Ex. 1001, col. 18, ll. 10–20). Petitioner notes that Dr. Brecker confirmed this: when asked to further define a "sparse distribution of fibers," Dr. Brecker merely

referenced drawings in the patent and argued that the fibers appeared "countable." *Id.* (citing Ex. 1073 315–319). Furthermore, notes Petitioner, Further, Patent Owner has never requested a claim construction for "fibers" or "endovascularly" that includes fiber density or sparsity as a part of the definition. *Id.* at 4.

Petitioner argues that Figures in the '011 patent cannot alone support the importation of a "sparse distribution" of fibers into the claims, because nothing in the patent indicates that the figures are to scale or accurately represent the arrangement of fibers necessary to enable endovascular delivery. Pet. Reply 5 (citing *Hockerson-Halberstadt, Inc. v. Avia Grp. Int'l*, *Inc.*, 222 F.3d 951, 956 (Fed. Cir. 2000)).

b. Compressibility of Spenser II's cloth

Petitioner next argues that Patent Owner's reliance upon Dr. Brecker's calculations is misplaced. Pet. Reply 8. Petitioner contends that Dr. Brecker, in his "rough estimate" of the crimped profile of Spenser II's compressible material, relied on the "uncompressed Spenser II outer cloth." *Id.* (citing Ex. 2051 ¶ 63; Ex. 1073, 350). Petitioner also notes Dr. Brecker testified he did not conduct any research on the compressibility of PET fabrics. *Id.* (*see* Ex. 1072, 191–192).

Petitioner asserts that Spenser II expressly discloses that its outer seal is "compressible" and teaches that its solutions are intended for percutaneously delivered valves. Pet. Reply 8 (citing Ex. 1011, Abstr., ¶ 145). Petitioner also points to Dr. Buller's testimony that persons of

ordinary skill in the art would have understood that Walther's outer cloth was "very compressible" and that its compressible material would result in much thinner profiles when the valve is compressed for delivery. *Id.* at 8–9 (citing Ex. 2052, 102–104, 123, 181).

Petitioner argues further that Dr. Buller's testimony is corroborated not only by Spenser II, but also by other prior art evidence. Pet. Reply 9. As evidence, Petitioner points to Norris[18], which discloses a "compressible resilient fabric" that can be used "in vascular and endovascular implants such as stents, stent-grafts, and heart valves." *Id.* (citing Ex. 1074, col. 10, ll. 45–49). According to Petitioner, Norris evidences that in some embodiments, its fabric can have a non-compressed thickness of about 1–5 mm (the same dimensions as Spenser II's compressible material), and when compressed, the fabric can have a thickness of about 0.004–0.008 inches (i.e., 0.1–0.2 mm), roughly 10–25 times thinner than its uncompressed thickness. *Id.* (citing Ex. 1074, col. 4, ll. 54–58). Petitioner asserts that, because Norris describes fabrics intended for use with endovascularly-deliverable heart valves, Norris teaches, and would have reinforced a skilled artisan's reasonable expectation, that Spenser II's compressible material would be compatible with an endovascularly-delivered TAVR. *Id.*

---

[18] Norris et al. (US 7, 921,678 B2, April 12, 2011) ("Norris") Ex. 1074.

Petitioner also disputes Patent Owner's argument that the outer cloth of Spenser II would "bunch," rendering it unusable for endovascular delivery. Pet. Reply 9. Petitioner contends that Patent Owner's and Dr. Brecker's reliance on Russell is misplaced, because: (1) Russell is not prior art; and (2) Russell's outer cloth is not a compressible PET fabric, rather, it is a dense, matted felt material. *Id.* at 9–10 (citing Ex. 2009, 1440; Ex. 1076). Furthermore, argues Petitioner, Russell's felt material was not meant to compress and expand to fill gaps between the valve and the native tissue like the outer cloth of Spenser II, but instead serves to provide a sturdy base for suturing the Russell valve to the patient's native mitral valve. *Id.* at 10 (citing Ex. 2009, 1443, Fig. 4F; Ex. 1072, 197–98; Ex. 1076).

Petitioner also notes that, contrary to Patent Owner's assertion that Spenser II's cloths would deform the struts of the frame or prevent uniform crimping, Dr. Buller explained that, during crimping of the valves, the apices of the frame would extend farther than the cloth, preventing deformation of the struts of the frame and permitting uniform crimping. Pet. Reply 11 (citing Ex. 1083 ¶ 152).

Petitioner also points out that Patent Owner's arguments seem to erroneously rely upon bodily incorporating Spenser II's compressible material onto the valves taught by Spenser. Pet. Reply 11. Petitioner argues that persons of skill in the art would have had knowledge of a range of suitable cloths, and could have selected an appropriately dimensioned cloth for endovascular delivery. *Id.* (citing Pet. 40, 69, 97; Ex. 1003 ¶¶ 69, 130, 298). In support of this, Petitioner points to prior art that demonstrates the

known range of cloths and outer sealing materials, including fabrics that are highly compressible to minimize valve profile. *Id.* at 12 (citing, e.g., Ex. 1011 ¶¶ 55, 145; Ex. 1008, 13; Ex. 1007, 1021; Ex. 1017, 1–2; Ex. 1074, col. 4, ll. 54–58, col. 10, ll. 45–49; Ex. 2056, 33–34).

Similarly, Petitioner disputes Patent Owner's allegations of impermissible hindsight analysis. Pet. Reply 13. Petitioner asserts the prior art expressly disclosed using fibrous outer sealing materials in THVs to reduce PVL and promote tissue ingrowth, and further taught adding sealing materials to valves intended for endovascular delivery. *Id.* (citing Ex. 1003 ¶¶ 63–74, 123–131, 206–214, 266, 293–299).

c. Iliac artery delivery

Petitioner notes that the '011 patent expressly teaches delivery of its TAVR through the "iliac arteries or an iliac conduit," and that the feasibility of such an approach is confirmed as known in the prior art by Kainuma. Pet. Reply 14 (quoting Ex. 1001, col. 10, ll. 34–35; Ex. 1043, 2; also citing Ex. 1077, 465–67). Petitioner contends that transiliac insertion of the TAVR could provide a preferable alternative for patients in whom the transfemoral approach is unfeasible. *Id.* Petitioner argues, *contra* Patent Owner, that although Kainuma employed a 22F sheath to deliver the TAVR (which was the standard diameter for a SAPIEN valve), a skilled artisan would have been aware that the common iliac artery has a generally larger diameter than the common femoral artery and could therefore accommodate a device with

a larger crimped diameter. *Id.* (citing Ex. 1003 ¶¶ 110, 125–28, 131, 210, 213, 296–298; Ex. 1078, 602–03).

Similarly, Petitioner contends that Craido expressly teaches that:

> Iliac access conduits are valuable tools to facilitate endovascular arterial access in a number of clinical situations that tend to share 2 things in common: the presence of small and/or diseased (calcified) femoral and external iliac arteries (EIA) and the need for introduction of a large-bore sheath or catheter, size ≥ 22-F, in the majority of cases.… [and that] the basic procedural requirements [for access via the iliac artery] tend to be straightforward from a surgical perspective.

Pet. Reply 15 (citing Ex. 1044, 347, 348).

Finally, Petitioner notes that Dr. Brecker's characterization of delivery through the common iliac artery as "perverse" is contradicted by his own articles. Pet. Reply 15 (citing Ex. 2051 ¶ 69). Petitioner points to Linke,[19] a prior art publication co-authored by Dr. Brecker, which expressly teaches TAVR implantations "via the iliac approach." *Id.* (citing Ex. 1101, 2674). Petitioner adds that the article does not include any teaching that transiliac implantations were unsafe. *Id.*

---

[19] A. Linke et al., *Treatment of Aortic Stenosis with a Self-Expanding Transcatheter Valve: the International Multi-centre ADVANCE Study*, 3S Euro. Heart J. 2672–84 (2014) ("Linke") Ex. 1101.

d. Objective indicia of nonobviousness

Petitioner argues that Patent owner has not provided any actual objective indicia evidence that the ’011 patent solved a long-felt need. Pet. Reply. 20. Petitioner argues that, as in the related IPR2022-00556 (the “’556 IPR”) proceeding, Patent Owner has not identified any evidence that the claimed TAVR device requiring sparsely distributed fibers (again, this is not expressly claimed) attached to the outside of the frame would reduce or prevent PVL, and argues that Dr. Brecker’s conclusion that the sparsely distributed fibers allegedly illustrated in the ’011 patent’s figures addresses PVL is wholly conclusory and without objective supporting evidence. *Id.* at 21 (citing *Perfect Web Techs., Inc. v. InfoUSA, Inc.,* 587 F.3d 1324, 1333 (Fed. Cir. 2009); Ex. 2051 ¶ 38). Patent Owner argues that Dr. Brecker in fact testified that he had never seen, or implanted, any valve that is designed like the valves disclosed in the ’011 patent. *Id.* (citing Ex. 1073, 308–309, 312).

Petitioner further contends that Patent Owner cites data relating to a comparison between the mild PVL rates for Petitioner’s SAPIEN 3 and SAPIEN 3 Ultra THVs. Pet. Reply 22 (citing PO Response 5). However, argues Petitioner, Patent Owner provides no objective evidentiary support for the alleged PVL rates, citing to no publications disclosing the mild PVL rates, but rather relies upon attorney argument made during prosecution of the related ’846 patent. *Id.* Petitioner relates that, during that prosecution, Patent Owner asserted that SAPIEN 3 had “mild PVL in 22.3% of cases, whereas, the Ultra had in only 7.2%.” *Id.* (quoting Ex. 2076, 145–146).

However, argues Petitioner, the article relied upon for this statement does not disclose the cited PVL numbers, and it does not even mention the SAPIEN 3 Ultra TAVR. *Id.* (citing Ex. 1081). The article in question teaches that "trace and mild PVL after TAVI is often considered to be acceptable and benign." *Id.* (quoting Ex. 2076, 210). Petitioner alleges that Patent Owner has not explained how reduction in an "acceptable and benign" level of PVL demonstrates that the '011 patent solved a long-felt but unmet need. *Id.* (citing Ex. 1072, 224, 231–232).

Petitioner summarizes the evidence as reflecting that addressing PVL was more complex than adding "outwardly extending fibers" to the outside of the valve; Petitioner contends that it required a multitude of design changes and considerations that are not claimed in the '011 patent and were not novel in 2012. Pet. Reply 23.

Finally, Petitioner argues that Patent Owner has not attempted to prove (here) that SAPIEN 3 Ultra embodies the claimed features of the '172 patent and is coextensive with them, so that Patent Owner is not entitled to a presumption of nexus. Pet. Reply (citing *Polaris Indus., Inc. v. Arctic Cat, Inc.*, 882 F.3d 1056, 1072 (Fed. Cir. 2018)).

e. Dr. Buller's testimony

Petitioner disputes Patent Owner's allegation that Dr. Buller's testimony was "implausible on significant matters." Pet. Reply 16 (quoting PO Resp. 48). According to Petitioner, Dr. Buller repeatedly explained that he does not interpret a patent drawing of a single embodiment to limit the

dimensions of an outer seal, such as those disclosed in Spenser II or the challenged patents. *Id.* (citing Ex. 2052, 156, 160, 168, 174). Furthermore, argues Petitioner, Dr. Buller explained correctly that "[t]here is no requirement on the exact density and how opaque or ... not opaque these things are in either of the[] teachings" of Spenser II or the challenged patent. *Id.* (citing Ex. 2052, 158,160, 161, 167, 168). Petitioner also notes that Dr. Buller also explained that Spenser II's "compressible material" in Figure 22 teaches the same concept as the figures of the challenged patents, as the Figures teach fibers disposed on the outside of the frame and do not otherwise limit the fiber arrangement or density. *Id.* at 16–17 (citing Ex. 2052, 158).

Petitioner also argues that, contrary to Patent Owner's assertions, Dr. Buller repeatedly explained that a person of ordinary skill in the art could not have drawn limiting conclusions regarding the dimensions of fibers from a drawing of a single embodiment in the '011 patent. Pet. Reply 17 (citing Ex. 2052, 156, 160, 168). Petitioner also notes that Dr. Buller also explained that the challenged patents fail to inform a skilled artisan on the "density of the fibers, the width of the fibers, [or] the length of the fibers," and that there is therefore "no teaching that allows you to come to any real conclusion about what [the valve] would collapse down to." *Id.* (citing Ex. 2052, 173, 174).

As noted above, we have adopted Petitioner's unopposed definition of a person of ordinary skill in the art. Pet. Reply 18. Petitioner points out that the Board has previously rejected similar attacks against Dr. Buller's

qualifications and found him qualified to provide opinions regarding similar subject matter. *Id.* (citing *Edwards Lifesciences Corp. v Boston Scientific*, IPR2017-00060, Paper 64, at 4 (the "'060 IPR")). Petitioner argues that the '060 IPR involved a patent directed to "methods and apparatus for endovascularly replacing a patient's heart valve," and Drs. Buller and Brecker were experts on opposite sides of that case, as they are here. *Id.* at 18–19. Petitioner contends that the Patent Owner in the '060 IPR similarly argued that Dr. Buller lacked "experience in the relevant technologies" because "he has never performed valve replacement procedure and has never implanted stent grafts." *Id.* at 19 (citing '060 IPR, Paper 64, at 10). Petitioner notes that the Board rejected these arguments, noting that the patentee "fail[ed] to provide a persuasive justification for why the fact that Dr. Buller has never performed a valve replacement procedure and has never implanted stent grafts matters, such that Dr. Buller's testimony should be given 'little or no weight.'" *Id.*

Petitioner insists that Dr. Buller is a highly-respected cardiologist with over 25 years of practice and has conducted or directly supervised more than 8,000 diagnostic and therapeutic non-surgical catheterization procedures. Pet. Reply 19 (citing Ex. 1003 ¶ 6). Petitioner argues that, given his extensive qualifications, the Board has already found Dr. Buller qualified to offer expert opinions on nearly identical subject matter and should do so again. *Id.* (citing '060 IPR, Paper 64, at 11).

6. Analysis

Excepting the limitation reciting "endovascularly delivering a heart valve through the access artery into an area proximal a native heart valve of the patient," Patent Owner does not contest Petitioner's arguments with respect to how the prior art teaches the limitations of claims 7 and 12. *See* PO Resp. 11–67. Therefore, having considered Petitioner's arguments above, and the evidence of record, we conclude that Petitioner has demonstrated by a preponderance of the evidence, that the challenged claims are obvious over Spenser and Spenser II. We explain further below.

Patent Owner's arguments focus on the "endovascular delivery" limitation and the motivation to combine the prior art. Therefore, this is also the focus of our analysis. Patent Owner also argues that we should afford the opinions of Petitioner's expert, Dr. Buller, little probative weight. *See* PO Resp. 1–10, 69–76. We consequently focus our analysis upon these arguments.

a. Dr. Buller

As an initial matter, we begin with our analysis of Dr. Buller's professional qualification as at least a person of ordinary skill in the art, an expert witness, and the weight to be given to his testimony.

Dr. Buller is a retired consultant cardiologist, with a medical degree[20] from University College London. Ex. 1003 ¶ 5. He is formerly the "Head of Interventional Cardiology at the Queen Elizabeth Hospital, Birmingham and the Lead Clinician for the Cardiac Catheterization Laboratories." *Id.* at ¶ 6. He has extensive experience in cardiac catheterization and cardiac stent implantation. *Id.* at ¶ 18, 20–24. Dr. Buller attests that he has had a close working relationship with the research and development departments in the medical device and pharmaceutical industries, and has served on the advisory boards for many of the major medical device manufacturers, including SCIMED, Boston Scientific, Medtronic, Cordis and Guidant/Abbott. *Id.* at ¶ 24.

We conclude that Dr. Buller has sufficient experience to qualify as an expert and to testify as to the perspective of a person of ordinary skill in the art. We find that Dr. Buller has experience as an interventional cardiologist with a working knowledge of heart valve designs and endovascular prostheses, as required by our definition of one of skill in the art. *See* Section II.A above. We find this particularly so in view of Dr. Buller's

---

[20] Dr. Buller was awarded a B.Sc. in 1977 and a M.B. B.S. in 1980. M.B. B.S. (Bachelor of Medicine, Bachelor of Surgery) is the primary medical schools in the United Kingdom. *See* MBBS (Bachelor of Medicine & Bachelor of Surgery), *available at*: https://scholar.harvard.edu/narender/classes/mbbs-bachelor-medicine-bachelor-surgery (last visited January 30, 2023). It is the professional equivalent of an M.D. in the United States.

extensive experience with endovascular catherization and stent implantation, which relate intimately to a central issue of this *inter partes* review, *viz.*, whether the device claimed in the ’011 patent can be delivered endovascularly. We acknowledge that Dr. Buller appears never to have personally performed a TAVR, but his knowledge of the device and the procedures appears to be intimate and thorough.

As Petitioner points out, the same arguments presented by Patent Owner here have been previously considered by the Board in the ’060 IPR. In that related proceeding, we found that the Patent Owner had failed to sufficiently demonstrate why Dr. Buller should not be considered to qualify as an expert or to testify as to the perspective of a person of ordinary skill in the art. *See* ’060 IPR, Paper 64 at 10–11. We find the same reasoning applies in the present proceeding.

Furthermore, with respect to the weight we should accord Dr. Buller’s opinion testimony, we have considered the opinions expressed by each of the experts in this case and accord the appropriate weight to each of their opinions based on whether the opinion is credible and whether it is supported by credible evidence. *See, e.g.*, *Velander v. Garner*, 348 F.3d 1359, 1371 (Fed. Cir. 2003) (“It is within the discretion of the trier of fact to give each item of evidence such weight as it feels appropriate.”).

b. “Delivered endovascularly”

As an initial matter, the claims of the ’011 patent do not require transfemoral insertion of the crimped valve, but rather only that the TAVR

be delivered "endovascularly," meaning only that the valve be delivered through the lumen of a blood vessel. *See, e.g.*, Ex. 1001, col. 6, ll. 33–35, col. 10, ll. 32–35. Spenser expressly teaches that its prosthetic heart valves can be delivered endovascularly:

> An aspect of the present invention deals with the possibility of implanting the valve percutaneously, i.e., inserting the valve assembly on a delivery device similar to a catheter, then implanting the valve at the desired location *via a large blood vessel* such as the femoral artery, in a procedure similar to other known interventional cardiovascular procedures.

Ex. 1010, col. 2, ll. 6–12 (emphasis added). Specifically, Spenser teaches that:

> A typical size of an aortic prosthetic valve is from about 19 to about 25 mm in diameter. A maximal size of a catheter inserted into the femoral artery should be no more than 8 mm [i.e., 24F] in diameter. The present invention introduces a device, which has the ability to change its diameter from about 4 mm [12F] to about 25 mm [75F]. Artificial valves are not new; however, artificial valves in accordance with the present invention posses [*sic*] the ability to change shape and size for the purpose of delivery and as such are novel. These newly designed valves require new manufacturing methods and technical inventions and improvements, some of which were described herein.

Id. at cols. 27–28, ll. 64–7. Spenser thus teaches that, in its crimped, deployment conformation, its valve has a diameter of approximately 12F, which is well within the maximum allowable diameter of 24F for transfemoral insertion.

Similarly, whether or not the "sparse fibers," argued by Patent Owner as attached to the outer surface of the invention as depicted in the '011

patent's figures are novel, we find Patent Owner's arguments with respect to this feature irrelevant to the issues at hand. None of the challenged claims of the '011 patent require that the fibers be sparse, or otherwise specifies a requisite density of the fibers. Rather, the claims require merely: "a plurality of radially extending fibers that extend outwardly of the outer frame" (claim 1 (incorporated into challenged claim 8) and claim 13). We will not import unrecited limitations from the '011 Specification into the challenged claims absent some reason to do so, and we find none. *CollegeNet, Inc. v. ApplyYourself, Inc.*, 418 F.3d 1225, 1231 (Fed. Cir. 2005).

Patent Owner does not contest that embodiments of the TAVR taught by Spenser teach all of the elements of the TAVR recited in the challenged claims, with the exception of the "sealing material … includ[ing] a plurality of radially extending fibers that extend outwardly of the outer frame" of disclaimed independent claim 1 (incorporated into challenged dependent claim 8) or the "sealing material … includ[ing] a plurality of radially extending fibers that extend outwardly of the outer frame, wherein the fibers include strands of fibers that terminate in an end thereof outwardly of the outer frame" of claim 13. For such limitations, Petitioner relies (in Ground III) upon the teachings of Spenser II, and particularly Figure 22 and its associated disclosures in its Specification. For the reader's convenience, Figure 22 of Spenser is again reproduced below:

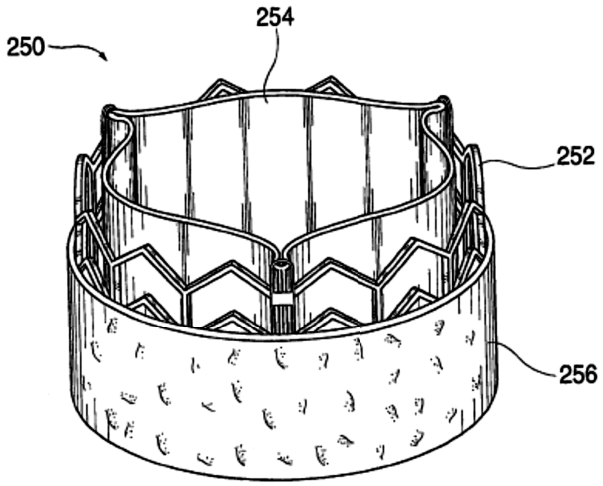

FIG. 22

Concerning Figure 22, Spenser II teaches that "Figure 22 illustrates a valve device, in accordance with another preferred embodiment of the present invention, wherein a layer of compressible material, such as a cloth material, is provided along an exterior surface of a stented valve." Ex. 1011 ¶ 85. More specifically, Spenser II teaches that:

> To reduce or prevent paravalvular leakage, a layer of compressible material 256 is disposed along an outer surface of the stent structure 252. The material may extend partially around the stent structure or may extend entirely around the stent structure, such as in the form of a sleeve. In one preferred embodiment, the compressible material is formed of polyethylene terephthalate (PET) and has a thickness ranging from about 1 to 5 mm. In certain configurations, the compressible material 256 may resemble *a cloth or fabric having small fibers extending from the surface of the material*. In various embodiments, *the fibers may be straight, curved or hook-shaped*. The compressible material expands after deployment at a treatment site. As the compressible material expands, *it fills the gaps between the stented valve and the surrounding tissue*.

> Accordingly, the compressible material creates a mechanical seal that prevents paravalvular leakage. In addition, the compressible material, and especially the fibers, may be adapted to encourage coagulation of blood to further fill the gaps and prevent leakage. In an alternative configuration, a tissue growth factor may be applied to the compressible material for promoting the growth of tissue into the material, thereby further sealing the gaps.

Id. at ¶ 145 (emphasis added). This teaches the claimed subject matter.

Spenser II also teaches that "the present invention provides new concepts of *percutaneous paravalvular repair*, including means for identifying the leak location, repair techniques, and *means for leak prevention that can be engineered into the prosthesis valve itself*." Ex. 1011 ¶ 14 (emphasis added). Such means include:

> [A] compressible material, such as *a clot[h] or fabric, extends around an exterior portion of the stent*. The compressible material may be formed of polyethylene terephthalate (PET) and is configured to expand into the gaps. Furthermore, *fibers on the material may be configured to encourage coagulation of blood to further fills the gaps and prevent leakage*. In one variation, a tissue growth factor.

Id. at ¶ 55 (emphasis added).

Spenser and Spenser II both expressly teach that their TAVRs are meant to be capable of being delivered endovascularly, as recited in the claims. *See, e.g.*, Ex. 1010, col. 2, ll. 6–15; Ex. 1011 ¶¶ 11–13, 90. Indeed, the 12F diameter of the valve taught by Spenser II is well within the maximum allowable diameter of 24F, such that a person of ordinary skill in the art could reasonable understand that there would be sufficient additional

space to accommodate the "compressible … cloth or fabric," which Spenser II teaches can also be delivered endovascularly.

This becomes particularly evident when one looks to the teachings of Petitioner's evidentiary reference Norris. Norris is prior art to the '011 patent, having been published on April 12, 2011.[21] Norris is directed to:

> A compressible resilient fabric [that] can include a ground layer of knitted yarn, and a loop layer comprising a plurality of loops, each loop having a point knit into the ground layer. The fabric can be compressible from a[] non-compressed configuration, in which each loop has an apex extending substantially perpendicularly outward from the ground layer, into a compressed configuration, in which each loop is collapsed onto the ground layer.

Ex. 1074 Abstr. Figure 4 of Norris is reproduced below:

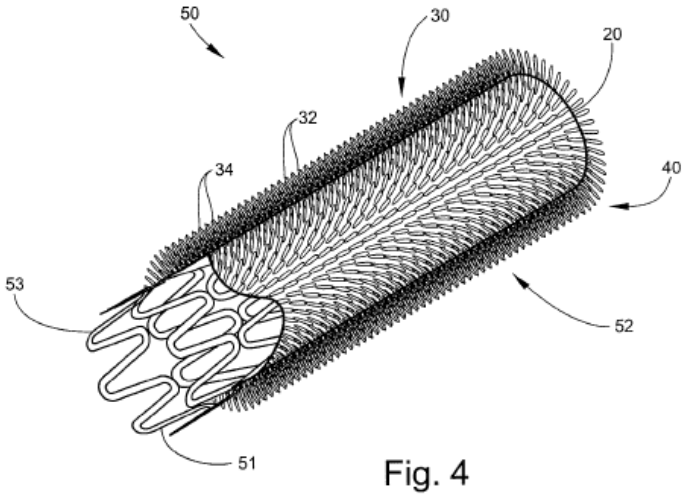

Fig. 4

[21] The '011 patent claims the priority benefit of US. Prov. Appl. Ser. No. No. 61/567,458 (the '458 application"), filed on December 6, 2011.

Figure 4 of Norris is a diagrammatic perspective view of a partially cut-away intraluminal sealing member on the exterior of a stent.

Figure 3 of Norris is reproduced below:

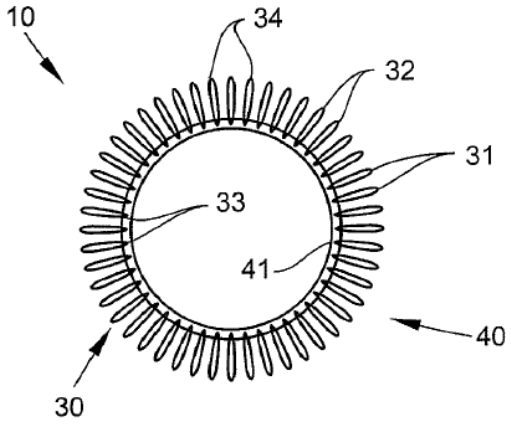

Fig. 3

Figure 3 of Norris depicts a cross-sectional view of a tubular-shaped compressible resilient fabric in a non-compressed configuration

Norris teaches that:

> Medical devices such as vascular and endovascular grafts and stent-grafts can include fabric components that *function to promote sealing of the device to the lumen or structure in which it is implanted*. Insertion of such devices and fabric components into target sites can require that *the fabric be compressed and collapsed so as to be placed inside a delivery catheter or cannula*. When such a device having a fabric component is inserted to a target site and the delivery catheter is removed, at least the fabric component is often expected to rebound to approximately its original shape, structure, and dimensions.

Ex. 1074, col. 1, ll. 20–30 (emphasis added). In particular, with reference to Figures 3 and 4, Norris teaches that:

> [T]he implantable device **50** and the inner member **51** can be tubular in shape. Such tubular embodiments can be utilized in cardiovascular applications, *such as with a heart valve or stent-graft.* In such applications, the intraluminal sealing member **52** can be formed, wrapped, or attached about the radially expanding inner member **51**. In this manner, *when the device **50** is implanted in a target location, flow of blood between the exterior of the device **50** and the wall of the vessel can be restricted and/or prevented*.

Ex. 1074, col. 9, ll. 18–26 (emphases added).

To satisfy this implantation and blood-flow restriction requirement, Norris evidences that "embodiments of the compressible resilient fabric 10, device 50, system, kit, and method as described herein can be utilized in medical applications, including, for example, in vascular and *endovascular implants such as stents, stent grafts, and heart valves*." *Id.* at col. 10, ll. 45–49 (emphasis added). Specifically, Norris is evidence that it was known in the art that compressible cloth can be used to seal an endovascularly-delivered device, such as a heart valve:

> The compressibility and/or resiliency in the compressible resilient fabric **10** needed for particular applications can vary. For example, in some clinical situations, compressibility may be of greater concern in order *to compress the fabric 10 or device 50 comprising such fabric **10** into a small enough delivery catheter to reach a target implant site*.... Such balanced loop density and height **43** can be optimized for particular applications, for example, *a heart valve* or for a stent-graft for an aneurysm.

Id. at col. 8, ll. 23–39 (emphases added).

Figure 3 of Norris, reproduced above, teaches that "a plurality of radially extending fibers that extend outwardly of the outer frame," as recited in claim 13, was known, even if it is debatable whether the radially-extending loops of Norris can be said to "terminate in an end thereof outwardly of the outer frame." However, we need not resolve this issue because Spenser II teaches that "[i]n certain configurations, the compressible material 256 may resemble a cloth or fabric having small fibers extending from the surface of the material. In various embodiments, the fibers may be straight, curved or hook-shaped." Ex. 1011 ¶ 145. A person skilled in the art would likely realize that such a modification would not render the compressible cloth of Norris non-functional, or change its operating principle, because Spenser II teaches that its compressible cloths are used to prevent leakage (i.e., PVL) around the implanted TAVR. *See, e.g.*, Ex. 1011 ¶ 145; Ex. 1074, col. 8, ll. 23–55.

Similarly, the disclaimed independent claim 1 (incorporated into challenged dependent claim 8, merely requires that the "sealing material includes a plurality of radially extending fibers that extend outwardly of the outer frame." Ex. 1001, col. 21, ll. 22–24. We find, for the reasons explained above, that Spenser II, particularly as further evidenced by Norris, meets this limitation.

Patent Owner points to the calculations of Dr. Brecker, and the potential "bunching" of the sealing cloth to argue that the addition of an outer cloth, as taught by Spenser II and evidenced by Norris, would render the TAVR of Spenser incapable of being inserted transfemorally, or

otherwise endovascularly. We do not find these arguments persuasive. First of all, both Spenser II and Norris expressly teach that their TAVRs, with an outer compressible cloth sealing layer, are intended for endovascular delivery. *See* Ex. 1011 ¶¶ 13, 14, 19; Ex. 1074, col. 10, ll. 45–49.

Secondly, Dr. Brecker calculates that:

> Spenser II provides that its cloth "has a thickness ranging from about 1 to 5 mm." Spenser and Levi both teach a valve that has a diameter of 25 mm and 26 mm respectively when fully expanded. Accordingly, even if we were to assume a POSITA used the thinnest possible cloth in Spenser II, Petitioner's proposed combination using the smaller Spenser 25 mm diameter (12.5 mm radius) expanded valve covered by a 1 mm cloth resulting in a 27 mm diameter (13.5 mm radius) valve…. From this we can conservatively estimate how much cloth is required for a cross-section of the proposed device (A_{cloth}) by calculating the total area of a cross-section of the cloth-covered valve ($\pi*(13.5\text{ mm})^2$) and subtracting the area of a cross-section of just the valve ($\pi*(12.5\text{ mm})^2$).
>
> $A_{cloth} = \pi*(13.5\text{ mm})^2 - \pi*(12.5\text{ mm})^2 = 81.68\text{ mm}^2$
>
> Accordingly, Petitioner's proposed combination requires 81.68 mm^2 of outer cloth in a given cross-section of the device.
>
> Petitioner asserts that Spenser's device, when crimped—without the cloth—would have a diameter of about 4 mm. The cross-section area of the crimped valve would therefore have an area of 12.57 mm^2 (A crimped = $\pi*(2\text{ mm})^2 = 12.57\text{ mm}^2$). If the 81.68 mm^2 cloth were added to the 12.57 mm^2 of crimped valve, the cloth-covered crimped valve would have a total area of 94.25 mm^2. Even if we were to assume that the cloth would form a perfect circle around the crimped valve, and no portions of the cloth would bulge more in certain areas (as Russell indicates)—two assumptions that artificially reduce the diameter significantly—this would mean that the radius of the crimped

> Spenser valve with the uncompressed Spenser II outer cloth would be at a minimum 5.48 mm.
>
> $$\text{Radius}_{\text{crimped}} = \sqrt{(94.25/\pi)}$$
>
> Accordingly, using conservative estimates, Petitioner's proposed combination of Spenser's valve with the Spenser II's outer cloth would have a diameter of at least 10.96 mm (when the valve is crimped and the cloth uncompressed) … over 36% too large for transfemoral delivery and endovascular delivery more generally. While Spencer II describes its cloth as "compressible material," there is no information or data presented on how compressible the cloth is. Furthermore, in my clinical experience of compressing such devices, pressure on one area of the cloth leads to bunching and expansion in another and therefore it is unlikely there would be a large reduction in the achieved caliber of the device (and a large reduction would be required to achieve 8 mm).…
>
> Thus, adding Spenser II's cloth to either Spenser or Levi would render the resulting device inappropriate for endovascular delivery.

Ex. 2051 ¶¶ 62–64 (citations and illustration omitted).

We agree with Dr. Brecker that Spenser II does not expressly address the magnitude of compressibility of its "compressible material, such as a clot[h] or fabric," nevertheless, the reference expressly teaches that its cloth or fabric *is* compressible; a factor which does not enter into Dr. Brecker's calculations. Moreover, a person of skill in the art would have known of Norris' teaching of a compressible material, the compressibility of which expressly renders it suitable for endovascular delivery of heart valves. *See* Ex. 1074, col. 9, ll. 18–21; *see also Standard Oil Co. v. American Cyanamid Co.*, 774 F.2d 448, 454 (Fed. Cir. 1985) (holding that a person of ordinary

skill in the art is "presumed to be aware of all the pertinent prior art"). Specifically, Norris teaches that:

> In the compressed configuration **41**, the fabric **10** can have a thickness **44** in the range of about 0.004–0.008 inches [0.102–0.203 mm]. Such a thin compressed configuration **41** can allow the fabric **10** to be easily inserted into a delivery catheter along with an intraluminal medical device, such as the device **50**.

Ex. 1074 cols. 7–8, ll. 66–3. The compressible cloth taught by Norris as suitable for endovascularly-delivered TAVRs is thus approximately an order of magnitude thinner than estimated by Dr. Brecker. Given this discrepancy, we can discount Dr. Brecker's calculations.

c. Motivation to combine the references

Patent Owner also argues that a person of ordinary skill in the art would not have been motivated to combine the teachings of Spenser and Spenser II. *See* PO Resp. 38–41. Patent Owner argues that: (1) A person of ordinary skill in the art would not be motivated to add Spenser II's outer cloths to Spenser's TAVR, which is meant for endovascular delivery. *Id.*

We disagree. Both Spenser II and the evidentiary prior art reference Norris provide ample motivation for combining Spencer II's compressible cloth, as a sealing material, to the TAVR disclosed by Spenser. For example, Spenser II teaches (and Patent Owner concedes) that the problem of PVL was well known in the art at the time of invention: "Cardiac valve implantation is well known in the art. Less well addressed is how to detect possible leaks between the valve and surrounding blood vessel, how to seal

such leaks, or how to design the valve such that it automatically seals the leaks." Ex. 1011 ¶ 2. Figure 22 depicts Spenser II's compressible cloth, which, added to the external surface of a TAVR, acts "to reduce or prevent paravalvular leaks." *Id.* at ¶ 144; *see also id.* at ¶¶ 55, 145 ("To reduce or prevent paravalvular leakage, a layer of compressible material 256 is disposed along an outer surface of the stent 15 structure 252).

Similarly, Norris also provides motivation to a skilled artisan to add a compressible outer cloth to a TAVR in expressly stating:

> Medical devices such as vascular and endovascular grafts and stent-grafts can include fabric components that function to promote sealing of the device to the lumen or structure in which it is implanted.… Regaining its [i.e., the fabric's] original shape, structure, and dimensions [once implanted] is important to achieve an adequate seal between the exterior of the device and the lumen or structure in which it is implanted. This is critical because any gaps or voids between the device and the implant site can prevent a reliable seal, which can lead to complications and/or device failure.

Ex. 1074, col. 1, ll. 20–35. We conclude that both Spenser II and the prior art Norris reference show there would have been motivation for a person of ordinary skill in the art to combine the compressible outer cloth of Spenser II with the TAVR disclosed by Spenser so as to reduce PVL and its associated serious problems.

Patent Owner also alleges that Petitioner has employed impermissible hindsight reconstruction in combining the teachings of Spenser and Spenser II. We do not find this argument persuasive.

> Any judgment on obviousness is in a sense necessarily a reconstruction based upon hindsight reasoning, but so long as it takes into account only knowledge which was within the level of ordinary skill at the time the claimed invention was made and does not include knowledge gleaned only from applicant's disclosure, such a reconstruction is proper.

In re McLaughlin, 443 F.2d 1392, 1395 (C.C.P.A. 1971). As we have explained above, both Spenser II and the prior art Norris reference expressly teach the combination of a compressible outer cloth with a TAVR for heart valve replacement procedures, with the explicit purpose of reducing or eliminating PVL. *See, e.g.*, Ex. 1011 ¶¶ 55, 145, 155; Ex. 1074, col. 9, ll. 18–26. Furthermore, Norris teaches that it was well known in the art, at the time of invention, that "[m]edical devices such as vascular and endovascular grafts and stent-grafts can include fabric components that function to promote sealing of the device to the lumen or structure in which it is implanted." Ex. 1011, col. 1, ll. 20–23. Norris further teaches that a compressible cloth was known to be used with endovascularly-delivered "cardiovascular applications, such as with a heart valve or stent-graft." *Id.* at col. 9, ll. 20–21.

In short, Patent Owner points to no requisite knowledge on the part of a skilled artisan that could have been gleaned *only* from the disclosures of the '011 patent's Specification or claims. *McLaughlin*, 443 F.2d at 1395. We consequently conclude that Patent Owner's arguments in this respect are without merit.

d. Objective indicia of nonobviousness

We have also considered that Patent Owner argues that evidence of objective indicia of nonobviousness supports a conclusion that the challenge claims are nonobviousness over the prior art. Specifically, Patent Owner argues that the invention disclosed by the ’011 patent met a long-felt need for a TAVR that reduces or eliminates the problem of PVL present in heart valve replacement. *See, e.g.*, PO Resp. 4 (quoting Ex. 2076, 135 (Statement by Patent Owner during prosecution of the related ’846 patent: “A long-felt need existed to reduce PVL while maintaining small valve profile, and multiple attempts to do so were not leading towards the claimed invention”)).

However, Patent Owner does not point to any objective evidence to support its contention that its invention specifically addressed and solved a long-felt need in the filed of TAVR. *See generally* PO Resp. Rather, Patent Owner relies primarily upon attorney statements made during the prosecution of this family of patents, and the conclusory opinion testimony of its expert, Dr. Brecker. As we stated in our Decision to institute *inter partes* review in related IPR2022-00556:

> Virtually all of Patent Owner’s arguments with respect to its meeting a long-felt unmet need derive support from arguments made by Patent Owner (the then-Applicant) during the prosecution of the ’236 patent, arguments which are necessarily, of their very nature, self-serving. Patent Owner points to little objective evidence that its invention was recognized as having met a long-felt need, rather, its arguments were directed to showing only that a putative need existed and had not yet been met. Patent Owner presents no evidence that its valve met a need

> that had not been previously met by the prior art (i.e., by the art upon which Grounds 1–6 are based, particularly Walther and Spenser II.).

IPR2022-00556, Paper 10 at 55.

In his Second Declaration, Dr, Brecker notes that TAVR was a revolutionary advance in treating heart disease, but that paravalvular leakage was a significant problem. *See* Ex. 2051 ¶¶ 42–43. But Dr. Brecker points to no evidence to show a nexus between the alleged long-felt need to address the issue of paravalular leakage and the claimed invention. *Id.* ¶¶ 36–44.

To be accorded substantial weight in an obviousness analysis, the evidence of objective indicia of nonobviousness must have a "nexus" to the claims, i.e., there must be "a legally and factually sufficient connection" between the evidence and the patented invention. *Henny Penny Corp. v. Frymaster LLC*, 938 F.3d 1324, 1332 (Fed. Cir. 2019) (citing *Demaco Corp. v. F. Von Langsdorff Licensing Ltd.*, 851 F.2d 1387, 1392 (Fed. Cir. 1988)). The correspondence between the objective evidence and the claim scope is part of determining if there is a nexus, not something that follows once a nexus is established (or presumed) on the basis that the asserted objective evidence is tied to a specific product and that product embodies the claimed features and is coextensive with them. *Id.*; *see also WMS Gaming Inc. v. Int'l Game Tech.*, 184 F.3d 1339, 1359 (Fed. Cir. 1999). If "the asserted objective evidence is tied to a specific product and that product 'embodies the claimed features, and is co-extensive with them,'" then the objective evidence is entitled to a rebuttable presumption of nexus. *Id.* (quoting *Polaris Indus., Inc. v. Arctic Cat, Inc.*, 882 F.3d 1056, 1072 (Fed. Cir. 2018);

see also Fox Factory, Inc. v. SRAM, LLC, 944 F.3d 1366, 1375 (Fed. Cir. 2019)).

Our analysis begins with a first step of establishing whether a nexus between the evidence and the claimed invention exists, and then analyzing the strength of the evidence. *See, e.g., Henny Penny*, 938 F.3d at 1332–33 (addressing first the existence of a nexus and then turning to analysis of the evidence of secondary considerations). Patent Owner's argument fails at the first step of this analysis for the simple reason that Patent Owner has failed to adduce any *objective* evidence of a long-felt need for its specific invention, or that the specific claimed invention met that long-felt need. The evidence of record demonstrates that the problem of PVL was one of considerable concern to the field of heart-valve replacement. *See, e.g.*, Ex. 1074, col. 1, ll. 33–35 ("This [i.e., sealing gaps between valve and vessel lumen] is critical because any gaps or voids between the device and the implant site can prevent a reliable seal, which can lead to complications and/or device failure").

Patent Owner points to Petitioner's SAPIEN Ultra 3 TAVR product as embodying the invention claimed in the '011 patent. *See* PO Resp. 5–6. However, Patent Owner has failed to provide any objective evidence, beyond its own statements made during prosecution and the opinion of its expert, to demonstrate that any such long-felt need was alleviated *specifically* by the invention claimed in the '011 patent. We consequently conclude that Patent Owner has failed to adduce objective evidence sufficient to establish a nexus between the long-felt need and Appellant's

claimed invention. Absent any such evidence, Patent Owner's argument that objective indicia render the claims of the '011 patent nonobvious must fail. *See Perfect Web Techs., Inc. v. InfoUSA, Inc.*, 587 F.3d 1324, 1332–33 (Fed, Cir. 2009).

e. Summary for Ground II

We conclude that Petitioner has established, by a preponderance of the evidence, that challenged claims 7 and 12 of the'011 patent are unpatentable under 35 U.S.C. § 103 as being obvious over the combination of Spenser and Spenser II, and that Patent Owner has failed to overcome Petitioner's arguments and evidence.

E. Grounds I and III–XIV

Because we find that Petitioner has demonstrated, by a preponderance of the evidence, that all of the challenged claims are unpatentable over Spenser and Spenser II upon Ground II, we need not address whether the challenge claims are unpatentable upon remaining Grounds I and III–XIV. *See SAS Inst. Inc. v. Iancu*, 138 S. Ct. 1348, 1359 (2018) (holding that a petitioner "is entitled to a final written decision addressing all of the claims it has challenged"); *Boston Sci. Scimed, Inc. v. Cook Grp. Inc.*, 809 F. App'x 984, 990 (Fed. Cir. 2020) (nonprecedential) (recognizing that the "Board need not address issues that are not necessary to the resolution of the proceeding" and therefore agreeing that the Board has "discretion to decline

to decide additional instituted grounds once the petitioner has prevailed on all its challenged claims").

III. CONCLUSION

For the reasons we have set forth above, and after having analyzed the entirety of the record and assigning appropriate weight to the cited supporting evidence, we determine that Petitioner has established, by a preponderance of the evidence, that claims 7 and 12 of the '011 patent are unpatentable.

IV. ORDER

Accordingly, it is

ORDERED that Petitioner has shown by a preponderance of the evidence that claims 7 and 12 of the '011 patent are unpatentable;[22]

---

[22] Should Patent Owner wish to pursue amendment of the challenged claims in a reissue or reexamination proceeding subsequent to the issuance of this decision, we draw Patent Owner's attention to the April 2019 *Notice Regarding Options for Amendments by Patent Owner Through Reissue or Reexamination During a Pending AIA Trial Proceeding*. *See* 84 Fed. Reg. 16,654 (Apr. 22, 2019). If Patent Owner chooses to file a reissue application or a request for reexamination of the challenged patent, we remind Patent Owner of its continuing

FURTHER ORDERED that, because this is a Final Written Decision, parties to the proceeding seeking judicial review of the decision must comply with the notice and service requirements of 37 C.F.R. § 90.2.

Claims	35 U.S.C. §	Reference(s) /Basis	Claims Shown Unpatentable	Claims Not Shown Unpatentable
7, 12	103[23]	Spenser, Walther		
7, 12	103	Spenser, Spenser II	7, 12	
7, 12	103[24]	Cribier '321, Walther		
7, 12	103[25]	Cribier '321, Spenser II		
7, 12	102(e)[26]	Levi		
7, 12	103[27]	Levi,		
7, 12	103[28]	Levi, Walther		
7, 12	103[29]	Levi, Spenser II		
7, 12	103[30]	Levi, Cribier '321		

---

obligation to notify the Board of any such related matters in updated mandatory notices. *See* 37 C.F.R. § 42.8(a)(3), (b)(2).

[23–35] For each of these Grounds, a decision was not reached because we determined the Petitioner's arguments with respect to the ground based on Spenser and Spenser II (Ground III) was dispositive of this case. See Boston Sci., 809 F. App'x at 990.

Claims	35 U.S.C. §	Reference(s) /Basis	Claims Shown Unpatentable	Claims Not Shown Unpatentable
7, 12	103[31]	Levi, Spenser		
7, 12	103[32]	Levi, Cribier '321, Walther		
7, 12	103[33]	Levi, Cribier '321, Spenser II		
7, 12	103[34]	Levi. Spenser, Walther		
7, 12	103[35]	Levi, Spenser, Walther II		
Overall Outcome			7, 12	

PETITIONER:

Craig Summers
Joshua Stowell
Brian Barnes
KNOBBE, MARTENS, OLSON & BEAR, LLP
2css@knobbe.com
2jys@knobbe.com
Brian.barnes@knobbe.com

PATENT OWNER:

Kenneth Weatherwax
Nathan Lowenstein
Edward Hsieh
LOWENSTEIN & WEATHERWAX LLP
weatherwax@lowensteinweatherwax.com
lowenstein@lowensteinweatherwax.com
hsieh@lowensteinweatherwax.com

From: PTACTS_System@uspto.gov <PTACTS_System@uspto.gov>
Sent: Tuesday, March 28, 2023 6:15 AM
To: weatherwax@lowensteinweatherwax.com; 2css <2css@knobbe.com>
Cc: 2Jys <2Jys@knobbe.com>; lowenstein@lowensteinweatherwax.com; hsieh@lowensteinweatherwax.com; Brian Barnes <Brian.Barnes@knobbe.com>
Subject: IPR2021-01584: Final Written Decision - Edwards Lifesciences Corp. v. Aortic Innovations LLC

UNITED STATES PATENT AND TRADEMARK OFFICE
PATENT TRIAL AND APPEAL BOARD

Final Written Decision Notice

AIA Review No.: IPR2021-01584
Petitioner: Edwards Lifesciences Corp.
Patent Owner: Aortic Innovations LLC of Hillsboro Beach, FL
Patent No.: 10857011
Decision Date: 03/28/2023
Submitted By: PTAB, Trials@uspto.gov

A Final Written Decision has been entered in the above case.

Questions regarding this receipt should be directed to the Patent Trial and Appeal Board at 571-272-7822 or e-mail to Trials@uspto.gov.

This e-mail is computer-generated. Do not reply to this e-mail because the e-mail box is not monitored.