OPAP IAP23 AUG 0 1 2011 PATENT & TRADEMARK OFFICE

PTO/SB/122 (11-08)
Approved for use through 11/30/2011. OMB 0651-0035
U.S. Patent and Trademark Office; U.S. DEPARTMENT OF COMMERCE
Under the Paperwork Reduction Act of 1995, no persons are required to respond to a collection of information unless it displays a valid OMB control number.

CHANGE OF CORRESPONDENCE ADDRESS
Application

Address to:
Commissioner for Patents
P.O. Box 1450
Alexandria, VA 22313-1450

Application Number	10/018,164
Filing Date	May 20, 2002
First Named Inventor	Timothy A.M. Chuter
Art Unit	3773
Examiner Name	J.W. Woo
Attorney Docket Number	C010-1001A-US/67113-0027

Please change the Correspondence Address for the above-identified patent application to:

☑ The address associated with Customer Number: 47902

OR

☐ Firm or Individual Name

Address

City | State | Zip

Country

Telephone | Email

This form cannot be used to change the data associated with a Customer Number. To change the data associated with an existing Customer Number use "Request for Customer Number Data Change" (PTO/SB/124).

I am the:

☐ Applicant/Inventor

☐ Assignee of record of the entire interest.
Statement under 37 CFR 3.73(b) is enclosed. (Form PTO/SB/96).

☑ Attorney or agent of record. Registration Number 24,761.

☐ Registered practitioner named in the application transmittal letter in an application without an executed oath or declaration. See 37 CFR 1.33(a)(1). Registration Number_____.

Signature

Typed or Printed Name William G. Lane

Date July 26, 2011 | Telephone 949.585.0348

NOTE: Signatures of all the inventors or assignees of record of the entire interest or their representative(s) are required. Submit multiple forms if more than one signature is required, see below*.

☑ *Total of 1 forms are submitted.

This collection of information is required by 37 CFR 1.33. The information is required to obtain or retain a benefit by the public which is to file (and by the USPTO to process) an application. Confidentiality is governed by 35 U.S.C. 122 and 37 CFR 1.11 and 1.14. This collection is estimated to take 3 minutes to complete, including gathering, preparing, and submitting the completed application form to the USPTO. Time will vary depending upon the individual case. Any comments on the amount of time you require to complete this form and/or suggestions for reducing this burden, should be sent to the Chief Information Officer, U.S. Patent and Trademark Office, U.S. Department of Commerce, P.O. Box 1450, Alexandria, VA 22313-1450. DO NOT SEND FEES OR COMPLETED FORMS TO THIS ADDRESS. **SEND TO: Commissioner for Patents, P.O. Box 1450, Alexandria, VA 22313-1450.**

If you need assistance in completing the form, call 1-800-PTO-9199 and select option 2.

Change of Address of Attorney
I hereby certify that this paper (along with any paper referred to as being attached or enclosed) is being transmitted via the Office electronic filing system in accordance with § 1.6(a)(4).

Dated: July 1, 2011
Electronic Signature for Michael B. Stewart: /Michael B. Stewart/

Docket No.: 67113-0027
(PATENT)

IN THE UNITED STATES PATENT AND TRADEMARK OFFICE

In re Patent Application of:
Timothy A.M. Chuter

Application No.: 10/018,164 | Confirmation No.: 8768

Filed: May 20, 2002 | Art Unit: 3773

For: LARGE VESSEL STENTS AND OCCLUDERS | Examiner: J. W. Woo

CHANGE OF CORRESPONDENCE ADDRESS

Commissioner for Patents
P.O. Box 1450
Alexandria, VA 22313-1450

Dear Sir:

In accordance with the Manual of Patent Examining Procedures, Section 601.03, please change the mailing address for all correspondence in the above-identified patent application to:

William G. Lane, Esq.
80776 Corte Santa Carmela
Indio, CA 92203

Phone: (949) 585-0348 Email: GregLanepat@msn.com

Please direct all further communications to the above-identified address.

Applicant believes no fee is due with this response. However, if a fee is due, please charge our Deposit Account No. 18-0013, under Order No. 67113-0027 from which the undersigned is authorized to draw.

Dated: July 1, 2011

Respectfully submitted,

Electronic signature: /Michael B. Stewart/
Michael B. Stewart
Registration No.: 36,018

Correspondence Customer Number: 10291
Attorney for Applicant

Electronic Acknowledgement Receipt

EFS ID:	10443247
Application Number:	10018164
International Application Number:	
Confirmation Number:	8768
Title of Invention:	Large vessel stents and occluders
First Named Inventor/Applicant Name:	Timothy A.M. Chuter
Customer Number:	10291
Filer:	Michael Stewart/Diane Jerome
Filer Authorized By:	Michael Stewart
Attorney Docket Number:	C010-1001A-US
Receipt Date:	01-JUL-2011
Filing Date:	20-MAY-2002
Time Stamp:	17:42:58
Application Type:	U.S. National Stage under 35 USC 371

Payment information:

Submitted with Payment	no

File Listing:

Document Number	Document Description	File Name	File Size(Bytes)/ Message Digest	Multi Part /.zip	Pages (if appl.)
1	Change of Address	Change_of_Correspondence_Address.pdf	77708 12eb8e3c5ecf1dac89698c3e91236e50f149ac08	no	1

Warnings:

Information:

Total Files Size (in bytes):	77708

This Acknowledgement Receipt evidences receipt on the noted date by the USPTO of the indicated documents, characterized by the applicant, and including page counts, where applicable. It serves as evidence of receipt similar to a Post Card, as described in MPEP 503.

New Applications Under 35 U.S.C. 111
If a new application is being filed and the application includes the necessary components for a filing date (see 37 CFR 1.53(b)-(d) and MPEP 506), a Filing Receipt (37 CFR 1.54) will be issued in due course and the date shown on this Acknowledgement Receipt will establish the filing date of the application.

National Stage of an International Application under 35 U.S.C. 371
If a timely submission to enter the national stage of an international application is compliant with the conditions of 35 U.S.C. 371 and other applicable requirements a Form PCT/DO/EO/903 indicating acceptance of the application as a national stage submission under 35 U.S.C. 371 will be issued in addition to the Filing Receipt, in due course.

New International Application Filed with the USPTO as a Receiving Office
If a new international application is being filed and the international application includes the necessary components for an international filing date (see PCT Article 11 and MPEP 1810), a Notification of the International Application Number and of the International Filing Date (Form PCT/RO/105) will be issued in due course, subject to prescriptions concerning national security, and the date shown on this Acknowledgement Receipt will establish the international filing date of the application.

UNITED STATES PATENT AND TRADEMARK OFFICE

Commissioner for Patents
United States Patent and Trademark Office
P.O. Box 1450
Alexandria, VA 22313-1450
www.uspto.gov

MAILED

JAN 21 2011

OFFICE OF PETITIONS

RADER, FISHMAN & GRAUER PLLC
39533 WOODWARD AVENUE
SUITE 140
BLOOMFIELD HILLS MI 48304-0610

In re Application of :
Chuter :
Application No. 10/018,164 : ON PETITION
Filed: May 20, 2002 :
Attorney Dkt. No. C010-1001A-US :

This is a decision on the petition under the unintentional provisions of 37 CFR 1.137(b), filed November 12, 2010, to revive the above-identified application.

The petition is **GRANTED**.

This above-identified application became abandoned for failure to timely file a reply to a final Office action mailed January 13, 2009. The Office Action set a three (3) month shortened statutory period for reply. No extension of time was requested under the provisions of 37 CFR 1.136(a). Accordingly, this application became abandoned on April 14, 2009. A Notice of Abandonment was mailed on August 8, 2010.

The petition satisfies the requirements of 37 CFR 1.137(b) in that petitioner has supplied (1) the reply in the form of a continuing application under 37 CFR 1.53(b); (2) the petition fee of $810; and (3) a proper statement of unintentional delay.

This application is being revived solely for purposes of continuity. As continuity has been established by this decision, the application is again abandoned in favor of continuation application No. 12/945,679.

Telephone inquiries concerning this decision should be directed to the undersigned at (571) 272-3215.

Charlema Grant
Petitions Attorney
Office of Petitions

PTO/SB/122 (11-08)
Approved for use through 11/30/2011. OMB 0651-0035
U.S. Patent and Trademark Office; U.S. DEPARTMENT OF COMMERCE
Under the Paperwork Reduction Act of 1995, no persons are required to respond to a collection of information unless it displays a valid OMB control number.

CHANGE OF CORRESPONDENCE ADDRESS
Application

Address to: Commissioner for Patents
P.O. Box 1450
Alexandria, VA 22313-1450

Application Number	10/018,164-Conf. #8768
Filing Date	May 20, 2002
First Named Inventor	Timothy A.M. Chuter
Art Unit	3773
Examiner Name	J. W. Woo
Attorney Docket No.	67113-0027

Please change the Correspondence Address for the above-identified application to:

[x] The address associated with Customer Number: 10291

OR

[ ] Firm or Individual Name	William G. Lane RADER, FISHMAN & GRAUER PLLC				
Address	39533 Woodward Avenue Suite 140				
City	Bloomfield Hills	State	MI	Zip	48304
Country	US				
Telephone	949.585.0348	Email	wgl@raderfishman.com		

This form cannot be used to change the data associated with a Customer Number. To change the data associated with an existing Customer Number use "Request for Customer Number Data Change" (PTO/SB/124).

I am the:

[ ] Applicant/Inventor

[ ] Assignee of record of the entire interest.
Statement under 37 CFR 3.73(b) is enclosed. (Form PTO/SB/96).

[x] Attorney or agent of record. Registration Number 24,761 .

[ ] Registered practitioner named in the application transmittal letter in an application without an executed oath or declaration. See 37 CFR 1.33(a)(1). Registration Number _____ .

Signature	/William G. Lane/		
Typed or Printed Name	William G. Lane		
Date	November 15, 2010	Telephone	(949) 585-0348

NOTE: Signatures of all the inventors or assignees of record of the entire interest or their representative(s) are required. Submit multiple forms if more than one signature is required, see below*.

[ ] *Total of 1 forms are submitted.

Change of Correspondence Address
I hereby certify that this paper (along with any paper referred to as being attached or enclosed) is being transmitted via the Office electronic filing system in accordance with § 1.6(a)(4).

Dated: November 15, 2010 Electronic Signature for Susan L. Dunlap: /Susan L. Dunlap/

Electronic Acknowledgement Receipt

EFS ID:	8832943
Application Number:	10018164
International Application Number:	
Confirmation Number:	8768
Title of Invention:	Large vessel stents and occluders
First Named Inventor/Applicant Name:	Timothy A.M. Chuter
Correspondence Address:	William G Lane - 16485 Lagna Canyon Road #250 - Irvine CA 92618 US - -
Filer:	William Gregory Lane/Susan Dunlap
Filer Authorized By:	William Gregory Lane
Attorney Docket Number:	C010-1001A-US
Receipt Date:	15-NOV-2010
Filing Date:	20-MAY-2002
Time Stamp:	09:37:55
Application Type:	U.S. National Stage under 35 USC 371

Payment information:

Submitted with Payment	no

File Listing:

Document Number	Document Description	File Name	File Size(Bytes)/ Message Digest	Multi Part /.zip	Pages (if appl.)
1	Change of Address	R0820053.PDF	76344 99d0b8c06aeb00f32974d677cd0437872e232f2e	no	1
Warnings:					
Information:					
			Total Files Size (in bytes):	76344	

This Acknowledgement Receipt evidences receipt on the noted date by the USPTO of the indicated documents, characterized by the applicant, and including page counts, where applicable. It serves as evidence of receipt similar to a Post Card, as described in MPEP 503.

<u>New Applications Under 35 U.S.C. 111</u>
If a new application is being filed and the application includes the necessary components for a filing date (see 37 CFR 1.53(b)-(d) and MPEP 506), a Filing Receipt (37 CFR 1.54) will be issued in due course and the date shown on this Acknowledgement Receipt will establish the filing date of the application.

<u>National Stage of an International Application under 35 U.S.C. 371</u>
If a timely submission to enter the national stage of an international application is compliant with the conditions of 35 U.S.C. 371 and other applicable requirements a Form PCT/DO/EO/903 indicating acceptance of the application as a national stage submission under 35 U.S.C. 371 will be issued in addition to the Filing Receipt, in due course.

<u>New International Application Filed with the USPTO as a Receiving Office</u>
If a new international application is being filed and the international application includes the necessary components for an international filing date (see PCT Article 11 and MPEP 1810), a Notification of the International Application Number and of the International Filing Date (Form PCT/RO/105) will be issued in due course, subject to prescriptions concerning national security, and the date shown on this Acknowledgement Receipt will establish the international filing date of the application.

PTO/SB/64 (07-09)
Approved for use through 07/31/2012. OMB 0651-0031
U.S. Patent and Trademark Office; U.S. DEPARTMENT OF COMMERCE
Under the Paperwork Reduction Act of 1995, no persons are required to respond to a collection of information unless it displays a valid OMB control number.

PETITION FOR REVIVAL OF AN APPLICATION FOR PATENT ABANDONED UNINTENTIONALLY UNDER 37 CFR 1.137(b)	Docket Number (Optional) 67113-0027

First named inventor: Timothy A.M. Chuter

Application No: 10/018,164 Art Unit: 3773

Filed: 05/20/2002 Examiner: J. W. Woo

Title: LARGE VESSEL STENTS AND OCCLUDERS

Attention: Office of Petitions
Mail Stop Petition
Commissioner for Patents
P.O. Box 1450
Alexandria, VA 22313-1450
FAX (571) 273-8300

NOTE: If information or assistance is needed in completing this form, please contact Petitions Information at (571) 272-3282.

The above-identified application became abandoned for failure to file a timely and proper reply to a notice or action by the United States Patent and Trademark Office. The date of abandonment is the day after the expiration date of the period set for reply in the office notice or action plus an extensions of time actually obtained.

APPLICANT HEREBY PETITIONS FOR REVIVAL OF THIS APPLICATION

NOTE: A grantable petition requires the following items:
(1) Petition fee;
(2) Reply and/or issue fee;
(3) Terminal disclaimer with disclaimer fee – required for all utility and plant applications filed before June 8, 1995; and for all design applications; and
(4) Statement that the entire delay was unintentional.

1. Petition fee

[X] Small entity – fee $ 810.00 (37 CFR 1.17(m)). Applicant claims small entity status. See 37 CFR 1.27.

[ ] Other than small entity – fee $ _____ (37 CFR 1.17(m))

2. Reply and/or fee

A. The reply and/or fee to the above-noted Office action in the form of a Continuation Application (identify type of reply):

[X] has been filed on Today's date .

[ ] is enclosed herewith.

B. The issue fee and publication fee (if applicable) of $ _____ .

[ ] has been paid previously on _____ .

[ ] is enclosed herewith.

Under the Paperwork Reduction Act of 1995, no persons are required to respond to a collection of information unless it displays a valid OMB control number.

3. Terminal disclaimer with disclaimer fee

[X] Since this utility/plant application was filed on or after June 8, 1995, no terminal disclaimer is required.

[ ] A terminal disclaimer (and disclaimer fee (37 CFR 1.20(d)) of $ _____ for a small entity or $ _____ for other than a small entity) disclaiming the required period of time is enclosed herewith (see PTO/SB/63).

4. STATEMENT: The entire delay in filing the required reply from the due date for the required reply until the filing of a grantable petition under 37 CFR 1.137(b) was unintentional. [NOTE: The United States Patent and Trademark Office may require additional information if there is a question as to whether either the abandonment or the delay in filing a petition under 37 CFR 1.137(b) was unintentional (MPEP 711.03(c), subsections (III)(C) and (D)).]

WARNING:

Petitioner/applicant is cautioned to avoid submitting personal information in documents filed in a patent application that may contribute to identity theft. Personal information such as social security numbers, bank account numbers, or credit card numbers (other than a check or credit card authorization form PTO-2038 submitted for payment purposes) is never required by the USPTO to support a petition or an application. If this type of personal information is included in documents submitted to the USPTO, petitioners/applicants should consider redacting such personal information from the documents before submitting them to the USPTO. Petitioner/applicant is advised that the record of a patent application is available to the public after publication of the application (unless a non-publication request in compliance with 37 CFR 1.213(a) is made in the application) or issuance of a patent. Furthermore, the record from an abandoned application may also be available to the public if the application is referenced in a published application or an issued patent (see 37 CFR 1.14). Checks and credit card authorization forms PTO-2038 submitted for payment purposes are not retained in the application file and therefore are not publicly available.

/William G. Lane/	November 12, 2010
Signature	Date
William G. Lane	24,761
Typed or printed name	Registration Number, if applicable
RADER, FISHMAN & GRAUER PLLC 39533 Woodward Avenue Suite 140 Bloomfield Hills, Michigan 48304	(949) 585-0348
Address	Telephone Number

Enclosures:
- [X] Fee Payment
- [ ] Reply
- [ ] Terminal Disclaimer Form
- [ ] Additional sheets containing statements establishing unintentional delay
- [X] Other: Continuation application has been filed on today's date in a separate communication.

Petition to Revive Application Unintentionally Abandoned

I hereby certify that this paper (along with any paper referred to as being attached or enclosed) is being transmitted via the Office electronic filing system in accordance with § 1.6(a)(4).

Dated: November 12, 2010 Electronic Signature for William G. Lane: /William G. Lane/

Notification of Filing of Continuing, Divisional Or Continued Prosecution Application
I hereby certify that this paper (along with any paper referred to as being attached or enclosed) is being transmitted via the Office electronic filing system in accordance with § 1.6(a)(4).

Dated: November 12, 2010
Electronic Signature for William G. Lane: /William G. Lane/

Docket No.: 67113-0027
(PATENT)

IN THE UNITED STATES PATENT AND TRADEMARK OFFICE

In re Patent Application of:
Timothy A.M. Chuter

Application No.: 10/018,164 | Confirmation No.: 8768

Filed: 05/20/2002 | Art Unit: 3773

For: LARGE VESSEL STENTS AND OCCLUDERS | Examiner: J. W. Woo

NOTIFICATION OF FILING OF CONTINUING, DIVISIONAL OR CONTINUED PROSECUTION APPLICATION

MS Issue Fee
Commissioner for Patents
P.O. Box 1450
Alexandria, VA 22313-1450

Dear Sir:

Notification is hereby being made of the filing of continuing application (Attorney Docket No. 67113-0027).

Applicant believes no fee is due with this response. However, if a fee is due, please charge our Deposit Account No. 18-0013, under Order No. 67113-0027 from which the undersigned is authorized to draw.

Dated: November 12, 2010

Respectfully submitted,

Electronic signature: /William G. Lane/
William G. Lane
Registration No.: 24,761
RADER, FISHMAN & GRAUER PLLC
Correspondence Customer Number: 10291
Attorney for Applicant

Electronic Patent Application Fee Transmittal

Application Number:	10018164
Filing Date:	20-May-2002
Title of Invention:	Large vessel stents and occluders
First Named Inventor/Applicant Name:	Timothy A.M. Chuter
Filer:	William Gregory Lane
Attorney Docket Number:	C010-1001A-US

Filed as Small Entity

U.S. National Stage under 35 USC 371 Filing Fees

Description	Fee Code	Quantity	Amount	Sub-Total in USD($)
Basic Filing:				
Pages:				
Claims:				
Miscellaneous-Filing:				
Petition:				
Petition-revive unintent. abandoned appl	2453	1	810	810
Patent-Appeals-and-Interference:				
Post-Allowance-and-Post-Issuance:				
Extension-of-Time:				

Description	Fee Code	Quantity	Amount	Sub-Total in USD($)
Miscellaneous:				
			Total in USD ($)	**810**

Electronic Acknowledgement Receipt

EFS ID:	8830851
Application Number:	10018164
International Application Number:	
Confirmation Number:	8768
Title of Invention:	Large vessel stents and occluders
First Named Inventor/Applicant Name:	Timothy A.M. Chuter
Correspondence Address:	William G Lane - 16485 Lagna Canyon Road #250 - Irvine CA 92618 US - -
Filer:	William Gregory Lane
Filer Authorized By:	
Attorney Docket Number:	C010-1001A-US
Receipt Date:	12-NOV-2010
Filing Date:	20-MAY-2002
Time Stamp:	18:38:00
Application Type:	U.S. National Stage under 35 USC 371

Payment information:

Submitted with Payment	yes
Payment Type	Deposit Account
Payment was successfully received in RAM	$810

RAM confirmation Number	5242
Deposit Account	180013
Authorized User	

The Director of the USPTO is hereby authorized to charge indicated fees and credit any overpayment as follows:

Charge any Additional Fees required under 37 C.F.R. Section 1.17 (Patent application and reexamination processing fees)

Charge any Additional Fees required under 37 C.F.R. Section 1.21 (Miscellaneous fees and charges)

File Listing:

Document Number	Document Description	File Name	File Size(Bytes)/ Message Digest	Multi Part /.zip	Pages (if appl.)
1		R0819986.PDF	488477 48359db3aa52feec97074bf60836bbef413a0c17	yes	5
	Multipart Description/PDF files in .zip description				
	Document Description		**Start**	**End**	
	Miscellaneous Incoming Letter		1	1	
	Fee Worksheet (PTO-875)		2	2	
	Petition for review by the Office of Petitions.		3	4	
	Miscellaneous Incoming Letter		5	5	
Warnings:					
Information:					
2	Fee Worksheet (PTO-875)	fee-info.pdf	29949 604d656a7bd33d58e04982621f522b73e3adc283	no	2
Warnings:					
Information:					
		Total Files Size (in bytes):	518426		

This Acknowledgement Receipt evidences receipt on the noted date by the USPTO of the indicated documents, characterized by the applicant, and including page counts, where applicable. It serves as evidence of receipt similar to a Post Card, as described in MPEP 503.

New Applications Under 35 U.S.C. 111
If a new application is being filed and the application includes the necessary components for a filing date (see 37 CFR 1.53(b)-(d) and MPEP 506), a Filing Receipt (37 CFR 1.54) will be issued in due course and the date shown on this Acknowledgement Receipt will establish the filing date of the application.

National Stage of an International Application under 35 U.S.C. 371
If a timely submission to enter the national stage of an international application is compliant with the conditions of 35 U.S.C. 371 and other applicable requirements a Form PCT/DO/EO/903 indicating acceptance of the application as a national stage submission under 35 U.S.C. 371 will be issued in addition to the Filing Receipt, in due course.

New International Application Filed with the USPTO as a Receiving Office
If a new international application is being filed and the international application includes the necessary components for an international filing date (see PCT Article 11 and MPEP 1810), a Notification of the International Application Number and of the International Filing Date (Form PCT/RO/105) will be issued in due course, subject to prescriptions concerning national security, and the date shown on this Acknowledgement Receipt will establish the international filing date of the application.

PTO/SB/21 (07-09)
Approved for use through 07/31/2012. OMB 0651-0031
U.S. Patent and Trademark Office; U.S. DEPARTMENT OF COMMERCE
Under the Paperwork Reduction Act of 1995, no persons are required to respond to a collection of information unless it displays a valid OMB control number.

TRANSMITTAL FORM

(to be used for all correspondence after initial filing)

Total Number of Pages in This Submission	

Application Number	10/018,164
Filing Date	05/20/2002
First Named Inventor	Timothy A.M. Chuter
Art Unit	3773
Examiner Name	J. W. Woo
Attorney Docket Number	67113-0027

ENCLOSURES (*Check all that apply*)

- [x] Fee Transmittal Form
  - [ ] Fee Attached
- [ ] Amendment/Reply
  - [ ] After Final
  - [ ] Affidavits/declaration(s)
- [ ] Extension of Time Request
- [ ] Express Abandonment Request
- [ ] Information Disclosure Statement
- [ ] Certified Copy of Priority Document(s)
- [ ] Reply to Missing Parts/ Incomplete Application
  - [ ] Reply to Missing Parts under 37 CFR 1.52 or 1.53
- [ ] Drawing(s)
- [ ] Licensing-related Papers
- [x] Petition
- [ ] Petition to Convert to a Provisional Application
- [ ] Power of Attorney, Revocation Change of Correspondence Address
- [ ] Terminal Disclaimer
- [ ] Request for Refund
- [ ] CD, Number of CD(s) _____
  - [ ] Landscape Table on CD
- [ ] After Allowance Communication to TC
- [ ] Appeal Communication to Board of Appeals and Interferences
- [ ] Appeal Communication to TC **(Appeal Notice, Brief, Reply Brief)**
- [ ] Proprietary Information
- [ ] Status Letter
- [ ] Other Enclosure(s) (please Identify below):

Petition for Revival of Application

Notice of Continuation Application Filed

Remarks

SIGNATURE OF APPLICANT, ATTORNEY, OR AGENT

Firm Name	RADER, FISHMAN & GRAUER PLLC		
Signature	/William G. Lane/		
Printed name	William G. Lane		
Date	November 12, 2010	Reg. No.	24,761

Transmittal

I hereby certify that this paper (along with any paper referred to as being attached or enclosed) is being transmitted via the Office electronic filing system in accordance with § 1.6(a)(4).

Dated: November 12, 2010 Electronic Signature for William G. Lane: /William G. Lane/

PTO/SB/17 (10-08)
Approved for use through 09/30/2010. OMB 0651-0032
U.S. Patent and Trademark Office; U.S. DEPARTMENT OF COMMERCE
Under the Paperwork Reduction Act of 1995, no person are required to respond to a collection of information unless it displays a valid OMB control number

Effective on 12/08/2004.
Fees pursuant to the Consolidated Appropriations Act, 2005 (H.R. 4818).

FEE TRANSMITTAL
For FY 2009

[X] Applicant claims small entity status. See 37 CFR 1.27

TOTAL AMOUNT OF PAYMENT ($) 810.00

Complete if Known	
Application Number	10/018,164
Filing Date	05/20/2002
First Named Inventor	Timothy A.M. Chuter
Examiner Name	J. W. Woo
Art Unit	3773
Attorney Docket No.	67113-0027

METHOD OF PAYMENT (check all that apply)

[ ] Check [ ] Credit Card [ ] Money Order [ ] None [ ] Other (please identify): _____

[X] Deposit Account Deposit Account Number: 18-0013 Deposit Account Name: Rader, Fishman & Grauer PLLC

For the above-identified deposit account, the Director is hereby authorized to: (check all that apply)

[X] Charge fee(s) indicated below
[ ] Charge fee(s) indicated below, **except for the filing fee**
[X] Charge any additional fee(s) or underpayments of fee(s) under 37 CFR 1.16 and 1.17
[X] Credit any overpayments

FEE CALCULATION

1. BASIC FILING, SEARCH, AND EXAMINATION FEES

	FILING FEES		SEARCH FEES		EXAMINATION FEES		
Application Type	Fee ($)	Small Entity Fee ($)	Fee ($)	Small Entity Fee ($)	Fee ($)	Small Entity Fee ($)	Fees Paid ($)
Utility	330	165	540	270	220	110	
Design	220	110	100	50	140	70	
Plant	220	110	330	165	170	85	
Reissue	330	165	540	270	650	325	
Provisional	220	110	0	0	0	0	

2. EXCESS CLAIM FEES

Fee Description	Fee ($)	Small Entity Fee ($)
Each claim over 20 (including Reissues)	52	26
Each independent claim over 3 (including Reissues)	220	110
Multiple dependent claims	390	195

Total Claims	Extra Claims	Fee ($)		Fee Paid ($)
			=	

HP = highest number of total claims paid for, if greater than 20.

Multiple Dependent Claims	
Fee ($)	Fee Paid ($)

Indep. Claims	Extra Claims	Fee ($)	Fee Paid ($)

HP = highest number of independent claims paid for, if greater than 3.

3. APPLICATION SIZE FEE

If the specification and drawings exceed 100 sheets of paper (excluding electronically filed sequence or computer listings under 37 CFR 1.52(e)), the application size fee due is $270 ($135 for small entity) for each additional 50 sheets or fraction thereof. See 35 U.S.C. 41(a)(1)(G) and 37 CFR 1.16(s).

Total Sheets		Extra Sheets		Number of each additional 50 or fraction thereof		Fee ($)		Fee Paid ($)
	- 100 =		/50 =		(round up to a whole number) x		=	

4. OTHER FEE(S) — Fees Paid ($)

Non-English Specification, $130 fee (no small entity discount) _____

Other (e.g., late filing surcharge): 2453 Petition to revive unintentionally abandoned ... 810.00

SUBMITTED BY

Signature	/William G. Lane/	Registration No. (Attorney/Agent)	24,761	Telephone	(949) 585-0348
Name (Print/Type)	William G. Lane			Date	November 12, 2010

Fee Transmittal

I hereby certify that this paper (along with any paper referred to as being attached or enclosed) is being transmitted via the Office electronic filing system in accordance with § 1.6(a)(4).

Dated: November 12, 2010 Electronic Signature for William G. Lane: /William G. Lane//

UNITED STATES PATENT AND TRADEMARK OFFICE

UNITED STATES DEPARTMENT OF COMMERCE
United States Patent and Trademark Office
Address: COMMISSIONER FOR PATENTS
P.O. Box 1450
Alexandria, Virginia 22313-1450
www.uspto.gov

APPLICATION NO.	FILING DATE	FIRST NAMED INVENTOR	ATTORNEY DOCKET NO.	CONFIRMATION NO.
10/018,164	05/20/2002	Timothy A.M. Chuter	C010-1001A-US	8768

7590 08/10/2009

William G Lane
16485 Lagna Canyon Road #250
Irvine, CA 92618

EXAMINER
WOO, JULIAN W

ART UNIT	PAPER NUMBER
3773	

MAIL DATE	DELIVERY MODE
08/10/2009	PAPER

Please find below and/or attached an Office communication concerning this application or proceeding.

The time period for reply, if any, is set in the attached communication.

Notice of Abandonment	Application No.	Applicant(s)	
	10/018,164	CHUTER, TIMOTHY A.M.	
	Examiner	Art Unit	
	Julian W. Woo	3773	

-- The MAILING DATE of this communication appears on the cover sheet with the correspondence address--

This application is abandoned in view of:

1. ☒ Applicant's failure to timely file a proper reply to the Office letter mailed on *13 January 2009*.
   (a) ☐ A reply was received on _____ (with a Certificate of Mailing or Transmission dated _____), which is after the expiration of the period for reply (including a total extension of time of _____ month(s)) which expired on _____.
   (b) ☐ A proposed reply was received on _____, but it does not constitute a proper reply under 37 CFR 1.113 (a) to the final rejection.
   (A proper reply under 37 CFR 1.113 to a final rejection consists only of: (1) a timely filed amendment which places the application in condition for allowance; (2) a timely filed Notice of Appeal (with appeal fee); or (3) a timely filed Request for Continued Examination (RCE) in compliance with 37 CFR 1.114).
   (c) ☐ A reply was received on _____ but it does not constitute a proper reply, or a bona fide attempt at a proper reply, to the non-final rejection. See 37 CFR 1.85(a) and 1.111. (See explanation in box 7 below).
   (d) ☒ No reply has been received.

2. ☐ Applicant's failure to timely pay the required issue fee and publication fee, if applicable, within the statutory period of three months from the mailing date of the Notice of Allowance (PTOL-85).
   (a) ☐ The issue fee and publication fee, if applicable, was received on _____ (with a Certificate of Mailing or Transmission dated _____), which is after the expiration of the statutory period for payment of the issue fee (and publication fee) set in the Notice of Allowance (PTOL-85).
   (b) ☐ The submitted fee of $_____ is insufficient. A balance of $_____ is due.
   The issue fee required by 37 CFR 1.18 is $_____. The publication fee, if required by 37 CFR 1.18(d), is $_____.
   (c) ☐ The issue fee and publication fee, if applicable, has not been received.

3. ☐ Applicant's failure to timely file corrected drawings as required by, and within the three-month period set in, the Notice of Allowability (PTO-37).
   (a) ☐ Proposed corrected drawings were received on _____ (with a Certificate of Mailing or Transmission dated _____), which is after the expiration of the period for reply.
   (b) ☐ No corrected drawings have been received.

4. ☐ The letter of express abandonment which is signed by the attorney or agent of record, the assignee of the entire interest, or all of the applicants.

5. ☐ The letter of express abandonment which is signed by an attorney or agent (acting in a representative capacity under 37 CFR 1.34(a)) upon the filing of a continuing application.

6. ☐ The decision by the Board of Patent Appeals and Interference rendered on _____ and because the period for seeking court review of the decision has expired and there are no allowed claims.

7. ☐ The reason(s) below:

/Julian W. Woo/
Primary Examiner, Art Unit 3773

Petitions to revive under 37 CFR 1.137(a) or (b), or requests to withdraw the holding of abandonment under 37 CFR 1.181, should be promptly filed to minimize any negative effects on patent term.

Aortic Innovations, LLC, Exhibit 2126
Page 2126 - 20
IPR2023-01325, Edwards Lifesciences Corp. et al v. Aortic Innovations, LLC

UNITED STATES PATENT AND TRADEMARK OFFICE

UNITED STATES DEPARTMENT OF COMMERCE
United States Patent and Trademark Office
Address: COMMISSIONER FOR PATENTS
P.O. Box 1450
Alexandria, Virginia 22313-1450
www.uspto.gov

APPLICATION NO.	FILING DATE	FIRST NAMED INVENTOR	ATTORNEY DOCKET NO.	CONFIRMATION NO.
10/018,164	05/20/2002	Timothy A.M. Chuter	C010-1001A-US	8768

7590 01/13/2009

William G Lane
16485 Lagna Canyon Road #250
Irvine, CA 92618

EXAMINER
WOO, JULIAN W

ART UNIT	PAPER NUMBER
3773	

MAIL DATE	DELIVERY MODE
01/13/2009	PAPER

Please find below and/or attached an Office communication concerning this application or proceeding.

The time period for reply, if any, is set in the attached communication.

Office Action Summary	Application No.	Applicant(s)	
	10/018,164	CHUTER, TIMOTHY A.M.	
	Examiner	Art Unit	
	Julian W. Woo	3773	

-- The MAILING DATE of this communication appears on the cover sheet with the correspondence address --

Period for Reply

A SHORTENED STATUTORY PERIOD FOR REPLY IS SET TO EXPIRE 3 MONTH(S) OR THIRTY (30) DAYS, WHICHEVER IS LONGER, FROM THE MAILING DATE OF THIS COMMUNICATION.

- Extensions of time may be available under the provisions of 37 CFR 1.136(a). In no event, however, may a reply be timely filed after SIX (6) MONTHS from the mailing date of this communication.
- If NO period for reply is specified above, the maximum statutory period will apply and will expire SIX (6) MONTHS from the mailing date of this communication.
- Failure to reply within the set or extended period for reply will, by statute, cause the application to become ABANDONED (35 U.S.C. § 133). Any reply received by the Office later than three months after the mailing date of this communication, even if timely filed, may reduce any earned patent term adjustment. See 37 CFR 1.704(b).

Status

1)☒ Responsive to communication(s) filed on *10/16/08*.

2a)☒ This action is **FINAL**. 2b)☐ This action is non-final.

3)☐ Since this application is in condition for allowance except for formal matters, prosecution as to the merits is closed in accordance with the practice under *Ex parte Quayle*, 1935 C.D. 11, 453 O.G. 213.

Disposition of Claims

4)☒ Claim(s) *1-5,16-20 and 22-39* is/are pending in the application.

4a) Of the above claim(s) _____ is/are withdrawn from consideration.

5)☐ Claim(s) _____ is/are allowed.

6)☒ Claim(s) *1-5,16-20 and 22-39* is/are rejected.

7)☐ Claim(s) _____ is/are objected to.

8)☐ Claim(s) _____ are subject to restriction and/or election requirement.

Application Papers

9)☐ The specification is objected to by the Examiner.

10)☐ The drawing(s) filed on _____ is/are: a)☐ accepted or b)☐ objected to by the Examiner.

Applicant may not request that any objection to the drawing(s) be held in abeyance. See 37 CFR 1.85(a).

Replacement drawing sheet(s) including the correction is required if the drawing(s) is objected to. See 37 CFR 1.121(d).

11)☐ The oath or declaration is objected to by the Examiner. Note the attached Office Action or form PTO-152.

Priority under 35 U.S.C. § 119

12)☒ Acknowledgment is made of a claim for foreign priority under 35 U.S.C. § 119(a)-(d) or (f).

a)☒ All b)☐ Some * c)☐ None of:

1.☐ Certified copies of the priority documents have been received.

2.☐ Certified copies of the priority documents have been received in Application No. _____.

3.☒ Copies of the certified copies of the priority documents have been received in this National Stage application from the International Bureau (PCT Rule 17.2(a)).

* See the attached detailed Office action for a list of the certified copies not received.

Attachment(s)

1) ☐ Notice of References Cited (PTO-892)
2) ☐ Notice of Draftsperson's Patent Drawing Review (PTO-948)
3) ☐ Information Disclosure Statement(s) (PTO/SB/08) Paper No(s)/Mail Date _____.
4) ☐ Interview Summary (PTO-413) Paper No(s)/Mail Date. _____ .
5) ☐ Notice of Informal Patent Application
6) ☐ Other: _____.

DETAILED ACTION

Claim Rejections - 35 USC § 112

1. The following is a quotation of the first paragraph of 35 U.S.C. 112:

> The specification shall contain a written description of the invention, and of the manner and process of making and using it, in such full, clear, concise, and exact terms as to enable any person skilled in the art to which it pertains, or with which it is most nearly connected, to make and use the same and shall set forth the best mode contemplated by the inventor of carrying out his invention.

2. Claims 1-5, 16-20, and 22-39 are rejected under 35 U.S.C. 112, first paragraph, as failing to comply with the written description requirement. The claim(s) contains subject matter which was not described in the specification in such a way as to reasonably convey to one skilled in the relevant art that the inventor(s), at the time the application was filed, had possession of the claimed invention. The specification does not describe the negatively-recited limitation of secured fibers of each loop “not [being] secured" to adjacent loops. On the contrary, the secured fibers of each loop can be said to be “secured” to adjacent loops by the interlocking or engagement of the fibers of adjacent loops forming the pile.

Claim Rejections - 35 USC § 102

3. The following is a quotation of the appropriate paragraphs of 35 U.S.C. 102 that form the basis for the rejections under this section made in this Office action:

> A person shall be entitled to a patent unless –
>
> (a) the invention was known or used by others in this country, or patented or described in a printed publication in this or a foreign country, before the invention thereof by the applicant for a patent.

4. Claims 1, 2, 16, 22, 24-30, and 34-39 are rejected under 35 U.S.C. 102(a) as being anticipated by Ferrera et al. (WO99/29260). Ferrera.et al. disclose, at least in

figures 25-28 and on page 27, lines 10-30; an endovascular stent comprising a generally tubular stent (140) comprising a circular configuration in cross section and adapted to permanently expand from a first diameter to a larger second diameter, the stent made of at least one helically wound wire (142) forming a plurality of loops, each wire of the stent comprising at least two twisted strands (142), the twisted strands securing fibers (136) between the twisted strands to from a fiber pile extending outwardly from the stent, the secured fibers of each loop not secured to adjacent loops (according to page 27, lines 24-26); where the twisted strands securing fibers form a fiber pile extending inwardly into the stent to substantially occlude the inner bore of the stent (when the fiber pile is woven and pushed in between the coils), where the fibers are coated with a pharmaceutically acceptable hydrophilic polymeric gel compatible with mammal body tissues and fluids (e.g., collagen), where the hydrophilic polymeric gel encapsulates the fiber pile, where the gel is not soluble in the body tissues and fluids, where the fibers are biocompatible, where the stent is self-expanding or expandable to permanently expand from a first diameter to a larger second diameter, where the fiber pile is adapted to form a foundation for tissue growth between the fiber pile and a surrounding lumenal wall of a vascular vessel, where the stent is made of at least two or more helically wound wires, and where the at least one helically wound wire is wound in a first direction.

Claim Rejections - 35 USC § 103

5. The following is a quotation of 35 U.S.C. 103(a) which forms the basis for all obviousness rejections set forth in this Office action:

> (a) A patent may not be obtained though the invention is not identically disclosed or described as set forth in section 102 of this title, if the differences between the subject matter sought to be patented and the prior art are such that the subject matter as a whole would have been obvious at the time the invention was made to a person having ordinary skill in the art to which said subject matter pertains. Patentability shall not be negatived by the manner in which the invention was made.

The factual inquiries set forth in *Graham* **v.** *John Deere Co.*, 383 U.S. 1, 148 USPQ 459 (1966), that are applied for establishing a background for determining obviousness under 35 U.S.C. 103(a) are summarized as follows:

1. Determining the scope and contents of the prior art.
2. Ascertaining the differences between the prior art and the claims at issue.
3. Resolving the level of ordinary skill in the pertinent art.
4. Considering objective evidence present in the application indicating obviousness or nonobviousness.

6. Claims 3 and 17-20 rejected under 35 U.S.C. 103(a) as being unpatentable over Ferrera et al. (WO99/29260). Ferrera et al. disclose the invention substantially as claimed, but do not specifically disclose that the hydrophilic polymer gel is partially or fully hydrated (with body fluids). Nevertheless, the hydrophilic gel inherently would at least be partially hydrated upon contact with body fluids at implantation of the stent in a patient's body. In any case, Ferrera et al. disclose, at least on page 19, line 29 to page 20, line 6; that various therapeutic agents may be combined with the gel (which acts as a carrier). Thus, it would have been obvious to one having ordinary skill in the art at the time the invention was made to at least partially hydrate the polymer gel (with body fluids). Such a practice would render the fiber pile more lubricious, so that the stent may be easily inserted into and moved through a vessel, while fully hydrating the gel would ensure activation and release of the therapeutic agents from the gel

7. Claims 4 and 5 are rejected under 35 U.S.C. 103(a) as being unpatentable over Ferrera et al. (WO99/29260) in view of Tekulve (6,117,157). Ferrera et al. disclose the

invention substantially as claimed, but do not disclose that the stent has a general conical shape prior to and after expansion with a first large diameter at one end and small diameter at the opposing end. Tekulve teaches, at least in figures 1 and 3 and col. 1, line 59 to col. 2, line 15; stent having a general conical shape prior to (See fig. 3) and after expansion (See fig. 1) with a first large diameter at one end and small diameter at the opposing end. It would have been obvious to one having ordinary skill in the art at the time the invention was made, in view of Tekulve, to modify the stent of Ferrera et al. so that it has a conical shape as claimed. Such a configuration would allow precise positioning of the stent at an embolization site, while the turns of the coil would effectively cover and occlude the cross-sectional area of a vessel lumen.

8. Claim 23 is rejected under 35 U.S.C. 103(a) as being unpatentable over Ferrera et al. (WO99/29260) in view of DiCosmo et al. (6,132,765). Ferrera et al. disclose the invention substantially as claimed, but do not disclose one or more beads of hydrophilic gel attached to the fibers. DiCosmo et al. teach, at least in figure 5 and in col. 4, lines 17-27 and col. 7, lines 14-48; beads of hydrophilic gel attachable to the fibers. It would have been obvious to one having ordinary skill in the art at the time the invention was made, in view of DiCosmo et al., to modify the gel and fibers of the stent of Ferrera et al., so that the gel comprises one or more beads. Such a configuration would provide an effective and excellent delivery vehicle for the drugs as disclosed by Ferrera et al.

9. Claims 31-33 are rejected under 35 U.S.C. 103(a) as being unpatentable over Ferrera et al. (WO99/29260) in view of Callister et al. (6,096,052). Ferrera et al. disclose the invention substantially as claimed, but do not disclose that at least one

other helically wound wire is wound in a second direction, where the helically wound wires are interwoven or cross over and cross under each other in a predetermined pattern. Callister et al. teach, at least in figures 1, 3, and 5-7 and col. 4, lines 43-60; helically wound wires that are interwoven or cross over and cross under each other in a predetermined pattern. It would have been obvious to one having ordinary skill in the art at the time the invention was made, in view of Callister et al., to modify the stent of Ferrera et al., so that the helically wound wires are interwoven or cross over and cross under each other in a predetermined pattern. Such a configuration would allow the stent to be securely attached to the lumen of a vessel wall, while the mesh as formed by the wires would facilitate epithelialization within and occlusion of the vessel lumen.

Response to Amendment

10. Applicant's arguments with respect to claims 1-5, 16-20, and 22-39 have been considered but are not persuasive in view of the new and restated ground(s) of rejection. That is, Ferrera et al. indeed disclose, inter alia, secured fibers not being secured to adjacent loops. With respect to arguments regarding the rejection under 35 U.S.C. 103(a) and based on Ferrera et al.: As shown in the rejection above, motivation was given for partial and full hydration of the gel. With respect to arguments regarding the rejection based on Tekulve: Ferrera et al. provides the disclosure of the stent substantially as claimed, while Tekulve was only relied upon for the teaching of conical stents. With respect to arguments regarding the rejection based on DiCosmo et al.: A motivation indeed was provided for combining DiCosmo et al. with Ferrera et al. Beaded gel provides the advantage of being an effective delivery vehicle for therapeutic

agents. With respect to arguments regarding the rejection based on Callister et al.: Ferrera et al. provide the disclosure of a stent with the fiber pile as claimed, while Callister et al. only provide the teaching of the weave of the stent structure as claimed.

Conclusion

11. **THIS ACTION IS MADE FINAL.** Applicant is reminded of the extension of time policy as set forth in 37 CFR 1.136(a).

A shortened statutory period for reply to this final action is set to expire THREE MONTHS from the mailing date of this action. In the event a first reply is filed within TWO MONTHS of the mailing date of this final action and the advisory action is not mailed until after the end of the THREE-MONTH shortened statutory period, then the shortened statutory period will expire on the date the advisory action is mailed, and any extension fee pursuant to 37 CFR 1.136(a) will be calculated from the mailing date of the advisory action. In no event, however, will the statutory period for reply expire later than SIX MONTHS from the mailing date of this final action.

12. Any inquiry concerning this communication or earlier communications from the examiner should be directed to Julian W. Woo whose telephone number is (571) 272-4707. The examiner can normally be reached Mon.-Fri., 7:00 AM to 3:00 PM Eastern Time, alternate Fridays off.

If attempts to reach the examiner by telephone are unsuccessful, the examiner's supervisor, Jackie Ho can be reached on (571) 272-4696. The fax phone number for the organization where this application or proceeding is assigned is (571) 273-8300.

Information regarding the status of an application may be obtained from the Patent Application Information Retrieval (PAIR) system. Status information for published applications may be obtained from either Private PAIR or Public PAIR. Status information for unpublished applications is available through Private PAIR only. For more information about the PAIR system, see http://pair-direct.uspto.gov. Should you have questions on access to the Private PAIR system, contact the Electronic Business Center (EBC) at 866-217-9197 (toll-free).

/Julian W. Woo/
Primary Examiner, Art Unit 3773

Index of Claims	Application/Control No.	Applicant(s)/Patent Under Reexamination
	10018164	CHUTER, TIMOTHY A.M.
	Examiner	**Art Unit**
	Julian W Woo	3773

✓	Rejected	-	Cancelled	N	Non-Elected	A	Appeal
=	Allowed	÷	Restricted	I	Interference	O	Objected

☐ Claims renumbered in the same order as presented by applicant ☐ CPA ☐ T.D. ☐ R.1.47

CLAIM		DATE								
Final	Original	04/10/2008	01/12/2009							
	1	✓	✓							
	2	✓	✓							
	3	✓	✓							
	4	✓	✓							
	5	✓	✓							
	6	-	-							
	7	-	-							
	8	-	-							
	9	-	-							
	10	-	-							
	11	-	-							
	12	-	-							
	13	-	-							
	14	-	-							
	15	-	-							
	16	✓	✓							
	17	✓	✓							
	18	✓	✓							
	19	✓	✓							
	20	✓	✓							
	21	✓	-							
	22	✓	✓							
	23	✓	✓							
	24	✓	✓							
	25	✓	✓							
	26	✓	✓							
	27	✓	✓							
	28	✓	✓							
	29	✓	✓							
	30	✓	✓							
	31	✓	✓							
	32	✓	✓							
	33	✓	✓							
	34	✓	✓							
	35	✓	✓							
	36	✓	✓							

Index of Claims	Application/Control No.	Applicant(s)/Patent Under Reexamination
	10018164	CHUTER, TIMOTHY A.M.
	Examiner	**Art Unit**
	Julian W Woo	3773

✓	Rejected	-	Cancelled	N	Non-Elected	A	Appeal
=	Allowed	÷	Restricted	I	Interference	O	Objected

☐ Claims renumbered in the same order as presented by applicant ☐ CPA ☐ T.D. ☐ R.1.47

CLAIM		DATE								
Final	Original	04/10/2008	01/12/2009							
	37	✓	✓							
	38	✓	✓							
	39	✓	✓							

Search Notes	Application/Control No.	Applicant(s)/Patent Under Reexamination
	10018164	CHUTER, TIMOTHY A.M.
	Examiner	**Art Unit**
	Julian W Woo	3773

SEARCHED

Class	Subclass	Date	Examiner
606	200, 191, 108	4/8/08	JWW
623	1.15, 1.2, 1.22, 1.36, 1.51-1.54	4/8/08	JWW
	Update of above search	1/12/09	JWW

SEARCH NOTES

Search Notes	Date	Examiner
See attached EAST search	4/8/08	JWW
See attached EAST search	4/9/08	JWW

INTERFERENCE SEARCH

Class	Subclass	Date	Examiner

Aortic Innovations, LLC, Exhibit 2126
Page 2126 - 32
IPR2023-01325, Edwards Lifesciences Corp. et al v. Aortic Innovations, LLC

OIPE IAP84
OCT 16 2008
PATENT & TRADEMARK OFFICE

Attorney Docket: C010-1001A-US

IN THE UNITED STATES PATENT AND TRADEMARK OFFICE

Applicant:	Timothy A.M. Chuter	Examiner:	Julian W. Woo
Serial No.:	10/018,164	Art Unit:	3773
Date Filed:	May 20, 2002		
For:	LARGE VESSEL STENTS AND OCCLUDERS		

Mail Stop Amendment
Commissioner for Patents
P.O. Box 1450
Alexandria, VA 22313-1450

Certificate of Mailing

I hereby certify that this document, together with any described as being attached or enclosed, is being deposited with the United States Postal Service as first class mail, postage fully prepaid, addressed to Mail Stop Amendment, Commissioner for Patents, P.O. Box 1450, Alexandria, VA 22313-1450 on OCTOBER 13, 2008

Executed on 10/13/08 Maureen Vieira
Maureen Vieira

AMENDMENT

Sir:

This amendment is in response to the Office Action mailed on April 11, 2008 in the above application. A three-month extension of time is requested, until October 11, 2008. October 11, 2008 falls on a Saturday, and Monday, October 13, 2008, is a Federal holiday. Therefore, this Amendment is being timely filed on October 13, 2008. The fee for the three-month extension is enclosed herewith.

This amendment amends Claims 1, 2, 4, 29 and 34; and cancels original Claim 21 without prejudice.

No additional claim filing fees are required.

Applicant respectfully submits that this amendment is fully responsive to the Office Action in the above application.

10/16/2008 LTRUONG 00000026 10018164
01 FC:2253 555.00 OP

CLAIMS LISTING

1. (currently amended) An endovascular stent for a vascular vessel comprising a generally tubular stent adapted to permanently expand from a first diameter to a larger second diameter, the stent made of at least one helically wound wire forming a plurality of loops, each wire of the stent comprising at least two twisted strands, the twisted strands securing fibers between the twisted strands to form a fiber pile extending outwardly from the stent, the secured fibers of each loop not secured to adjacent loops.

2. (original) The endovascular stent according to Claim 1 wherein the twisted strands of each loop also securing fibers to form a fiber pile extending inwardly into the stent to substantially occlude the inner bore of the stent.

3. (original) The endovascular stent of Claim 1 wherein the fibers are coated with at least a partially dehydrated hydrophilic polymeric gel.

4. (currently amended) An endovascular stent for occluding the lumen of a vascular vessel comprising a stent adapted to be expanded in the lumen of a vascular vessel, the stent having a general conical shape prior to and after expansion with a first large diameter at one end and a small diameter at the opposing end, the stent adapted to have the first large diameter permanently expanded to a larger diameter, the stent made of at least one helically wound wire forming a plurality of loops, each wire of the stent comprising at least two twisted strands, the twisted strands securing fibers between the twisted strands to form a fiber pile

extending outwardly from the stent and extending inwardly into the stent to substantially occlude the inner bore of the stent, the secured fibers of each loop not secured to adjacent loops.

5. (original) The endovascular stent of Claim 4 wherein the fibers are coated with at least a partially dehydrated hydrophilic polymeric gel.

Claims 6-15 (cancelled)

16. (previously presented) The endovascular stent according to Claim 1 wherein the fibers are coated with a pharmaceutically acceptable hydrophilic polymeric gel compatible with mammal body tissues and fluids.

17. (previously presented) The endovascular stent according to Claim 16 wherein the hydrophilic polymeric gel is partially dehydrated.

18. (previously presented) The endovascular stent according to Claim 16 wherein the hydrophilic polymeric gel is fully hydrated.

19. (previously presented) The endovascular stent according to Claim 17 wherein the partially dehydrated hydrophilic polymeric gel is adapted to be hydrated by body fluids.

20. (previously presented) The endovascular stent according to Claim 18 wherein the fully hydrated hydrophilic polymeric gel is adapted to be hydrated by body fluids.

21. (cancelled)

22. (previously presented) The endovascular stent according to Claim 16 wherein the hydrophilic polymeric gel encapsulates the fiber pile.

23. (previously presented) The endovascular stent according to Claim 16 wherein one or more beads of the hydrophilic polymeric gel are attached to the fibers.

24. (previously presented) The endovascular stent according to Claim 16 wherein the hydrophilic polymeric gel is not soluble in the body tissues and fluids.

25. (previously presented) The endovascular stent according to Claim 1 wherein the fibers of the fiber pile are biocompatible fibers.

26. (previously presented) The endovascular stent according to Claim 1 wherein the stent is a self-expanding stent adapted to permanently expand from a first diameter to a larger second diameter.

27. (previously presented) The endovascular stent according to Claim 1 wherein the stent is expandable to permanently expand from a first diameter to a larger second diameter.

28. (previously presented) The endovascular stent according to Claim 1 wherein the fiber pile is adapted to form a foundation for tissue growth between the fiber pile and a surrounding lumenal wall of a vascular vessel when the stent is implanted in a patient.

29. (currently amended) The endovascular stent according to Claim 1 wherein the stent is made of a least two or more helically wound wires, each helically wound wire forming a plurality of loops, each wire of the stent comprising at least two twisted strands, the twisted strands securing fibers between the strands to form a fiber pile extending outwardly from the stent, the secured fibers of each loop not secured to adjacent loops.

30. (previously presented) The endovascular stent according to Claim 29 where at least one helically wound wire is wound in a first direction.

31. (previously presented) The endovascular stent according to Claim 30 wherein at least one other helically wound wire is wound in a second direction.

32. (previously presented) The endovascular stent according to Claim 31 wherein the helically wound wire is in one direction and the helically wound wire is in the other direction are interwoven to form an interweaving structure stent.

33. (previously presented) The endovascular stent according to Claim 31 wherein at least one of the helically wound wires crosses over and crosses under at least one other helically wound wire in a predetermined pattern.

34. (currently amended) An endovascular stent for a vascular vessel comprising a longitudinal stent having a circular configuration in cross section at any point longitudinal along its length, the stent adapted to be permanently expanded radially outward along its length, the stent made of least one helically wound wire forming a plurality of loops, each wire of the stent comprising at least two twisted strands, the twisted strands securing fibers between the twisted strands to form a fiber pile extending outwardly from the stent, the secured fibers of each loop are not secured to adjacent loops.

35. (previously presented) The endovascular stent of Claim 1 wherein the fiber pile extending outwardly from the stent extends radially outwardly.

36. (previously presented) The endovascular stent of Claim 2 wherein the fiber pile extending inwardly into the stent extends radially inwardly.

37. (previously presented) The endovascular stent of Claim 4 wherein the fiber pile extending outwardly from the stent extends radially outwardly.

38. (previously presented) The endovascular stent of Claim 4 wherein the fiber pile extending inwardly into the stent extends radially inwardly.

39. (previously presented) The endovascular stent of Claim 34 wherein the fiber pile extending outwardly from the stent extends radially outwardly.

REMARKS

Claims 1-5, 16-20 and 22-39 are now in the application. Claims 1, 2, 4, 29 and 34 have been currently amended. Claim 21 has been cancelled. Original Claims 6-15 were previously cancelled without prejudice. The Examiner was corrected in noting that claims 16 and 21 covered the same invention.

Claims 6-15 were withdrawn from consideration pursuant to an election made to the restriction requirement mailed on January 25, 2005. As stated before, applicant intends to file a divisional application to pick up the subject matter of the nonelected inventions.

Support of amended Claims recited that the helically wound wire forms loops and the secured fibers of each loop are not secured to adjacent loops. Each secured fiber is a single fiber. Support for the amended claims is found on page 5, lines 25-32; and page 10, lines 10-3 & 19-30; and Figures 13 and 5-10. It is submitted that the amended Claims 1, 2, 4, 29, and 34, and the new Claims 35-39 are fully supported by the application as filed, and add no new matter to the application.

Amended Claims 1, 4, 29, and 34 specify that the twisted strands of each wire of the stent securing fibers forming the fabric pile <u>between the strands</u> as described in the specification and illustrated in the drawings, e.g. Figure 7.

Amended Claim 4 in addition specifies that the stent has a conical shape prior to and after expansion as described in the specification and illustrated in the drawings, e.g. Figure 5.

New Claims 35-39 are dependent upon Claims 1, 2, 4, and 34 and specify that the fabric pile extending outwardly in Claims 1, 2, and 34 extend <u>radially</u> outwardly and the fabric pile extending outwardly and inwardly in Claim 4 extends <u>radially</u> outwardly and inwardly.

Before discussing the rejections in detail, applicant wishes to point out that each claim specifies that the twisted strands of each loop of the helically wound wire secure fibers between

the twisted strands to form a fiber pile extending outwardly from (and "inwardly into" in some claims) the stent. The fibers are not secured to adjacent loops. These features are not taught by any of the cited references and the references do not lend motivation to one ordinarily skilled in the art to alter the teachings of the references to obtain these features.

REJECTIONS

CLAIMS 1, 2, 16, 21, 22, 24-30 and 34-39

Claims 1, 2, 16, 21, 22, 24-30 and 34-39 have been rejected under 35 U.S.C. 102 as being anticipated by Ferrera et al. (WO99/29260) for the reasons set forth in paragraph number 4 of the Office Action.

To anticipate a claim under section 102 of the Patent Act, the reference of record must disclose each and every element of the claim. Ferrera et al. discloses a coiled stent of stranded wire having a plurality of loops and with one or more therapeutic fibers 136 woven about adjacent loops of the coil (lines lines 5-8 of page 27 and Figures 25-27). Ferrara et al does not disclose having fibers secured in the twisted strand of each loop where the fibers are not secured or woven about adjacent loops. The rejection must fail because Ferrera et al. does not teach every element of the above identified claims as amended.

CLAIMS 3 and 17-20

Claims 3 and 17-20 are rejected also under 35 U.S.C. 103(a) as being unpatentable over Ferrera et al. It is asserted that: "Ferrera et al. discloses the invention substantially as claimed, but does not specifically disclose that the hydrophilic polymer gel is partially or fully hydrated (with body fluids). Nevertheless, it would have been obvious to one having ordinary skill in the art at the time the invention was made to at least partially hydrate the polymer gel (with body fluids)."

Ferrera et al. does not disclose coating a fiber 136 with a hydrophilic polymer gel. Ferrera et al. discloses at least one strand of the wire forming the coil containing a therapeutic agent, including a hydrogel. But it has no teaching disclosing at least partially hydrating the hydrogel with body fluid or otherwise. And Ferrera et al. does not disclose a device with single fibers in each loop forming a fiber pile where the fibers of one coil are not secured to or woven in adjacent loops of the coil. Clearly without some teaching regarding these elements of the claim, claims 3 and 17-20 are not obvious over Ferrera et al. The bottom line is that there is no motivation in Ferrera et al. to modify Ferrera et al. to meet all the claimed elements.

The rejection cannot stand.

CLAIMS 4 and 5

Claims 4 and 5 are rejected also under 35 U.S.C. 103(a) as being unpatentable over Ferrera et al. in view of Tekulve (6,117,157). It is asserted that: "Ferrera et al. discloses the invention substantially as claimed, but does not disclose that the stent has a general conical shape..." Tekulve is relied upon to show that conical shaped stents are known in the prior art.

Claim 4 covers a stent having all the elements of claim 1 with the additional limitation that it has a conical shape. Claim 5, dependent upon claim 4, includes that the fibers have a coating of at least a partially hydrated hydrophilic gel.

Tekulve does not disclose a stent having a fabric pile or fibers of any sort. Ferrera et al. and Tekulve do not disclose coating a fiber with a hydrophilic polymer gel. Ferrera et al. discloses at least one strand of the wire forming the coil containing a therapeutic agent, including a hydrogel. But it has no teaching disclosing at least partially hydrating the hydrogel with body fluid or otherwise. And Ferrera et al. does not disclose a device with single fibers in each loop forming a fiber pile where the fibers of one coil are not secured to or woven in adjacent loops of the coil. Clearly without some teaching regarding these elements of the claim,

claims 4 and 5 are not obvious over Ferrera et al alone or in combination with Tekulve. The bottom line is that there is no motivation in these two references to modify Ferrera et al. to meet all the elements of amended claims 4 and 5. The rejection must fall.

CLAIM 23

Claim 23 is rejected under 35 USC 103(a) as being unpatentable over Ferrera et al. in view of DiCosmo et al. (6,132,765). It is asserted that: "Ferrera et al. discloses the invention substantially as claimed, but does not disclose one or more beads of hydrophilic gel attached to the fibers..." DiCosmo et al. is relied upon to show one or more beads of hydrophilic gel attached to the fibers are known in the prior art.

Claim 23 covers a stent having all the elements of claim 1 and 16 with the additional limitation that the hydrophilic gel is attached to the fibers as beads.

DiCosmo et al. doesn't disclose beads of any gel material and it does not disclose the elements of claim 1 that are not disclosed in Ferrera et al. The rejection is not sustainable. Where is the motivation to modify the references to yield the invention of claim 23 as amended?

CLAIMS 31-33

Claim 31-33 are rejected under 35 USC 103(a) as being unpatentable over Ferrera et al. in view of Callister et al. (6,096,052). It is asserted that: "Ferrera et al. discloses the invention substantially as claimed, but does not disclose that at least one other helically wound wire is wound in a second direction..." Callister et al. is relied upon to show a stent having two or more helically wound wires in opposite directions.

Callister et al. discloses a stent with a plurality of helically wound wires crossing over and under to form a mesh work.

Claims 31-33 cover stent with the limitations of claims 1 and 29 and having at least two helically wound wires with at least two strands securing fibers between the strands; at least one of the helically wound wires going in second direction.

Although Callister et al. discloses a stent with at least two helically wound wires running in opposite directions, it, like Ferrera et al., does not disclose a device with single fibers in each loop forming a fiber pile where the fibers of one coil are not secured to or woven in adjacent loops of the coil. Clearly without some teaching regarding these elements of the claim, claims 31-33 are not obvious over Ferrera et al alone or in combination with Callister et al. The rejection cannot stand.

The fabric pile of the claimed invention made up of a plurality of single fibers as clearly illustrated in the drawings is a key element of the invention. None of the references disclose a stent with such a fabric pile.

Applicant respectfully submits that in light of the claims as amended, and in view of the above remarks, the application is in condition for allowance, and the claims as amended are patentable over the four cited references identified in the Office Action and discussed above.

A favorable action is solicited.

Respectfully submitted,

Date: Oct. 11, 2008

William G. Lane
Registration No. 24,761

Correspondence Address:
WILLIAM G. LANE, INC., P.C.
16485 Laguna Canyon Road, #250
Irvine, California 92618
Telephone: 949-585-0348
Facsimile: 949-585-0494

OIPE IAP84
OCT 16 2008
PATENT & TRADEMARK OFFICE

IFW 3773 $ /cc

Attorney Docket: C010-1001A-US-RCE

IN THE UNITED STATES PATENT AND TRADEMARK OFFICE

Applicant: Timothy A.M. Chuter
Serial No.: 10/018,164
Date Filed: May 20, 2002
For: LARGE VESSEL STENTS AND OCCLUDERS

Examiner: Julian W. Woo
Art Unit: 3773

Mail Stop Amendment
Commissioner for Patents
P.O. Box 1450
Alexandria, VA 22313-1450

Certificate of Mailing

I hereby certify that this document, together with any described as being attached or enclosed, is being deposited with the United States Postal Service as first class mail, postage fully prepaid, addressed to Mail Stop Amendment, Commissioner for Patents, P.O. Box 1450, Alexandria, VA 22313-1450 on OCTOBER 13, 2008

Executed on 10/13/08 Maureen Vieira
Maureen Vieira

TRANSMITTAL AND REQUEST FOR THREE-MONTH EXTENSION OF TIME

Sir:

The following documents are enclosed in connection with applicant's response to the Office Action dated April 11, 2008. A three-month extension of time is requested. No additional claim filing fees are required.

Amendment;

Credit Card Payment Form PTO-2038 in amount of $555.00 (small entity)

Certificate of Mailing; and

Postcard.

The fees for claims and the extension have been calculated as follows for a small entity:

	Claims Remaining	Highest No. Previously Paid	No. Extra	Rate	Additional Fee Due
Total Claims	28	34	0	x $ 26 =	$ -0-
Total Independent Claims	3	8	0	x $110=	-0-
	Total for Claims				$ -0-
	3-Month Extension Fee				555.00
	TOTAL DUE				$555.00

Respectfully submitted,

Date: October 13, 2008

Maureen Vieira
Maureen Vieira, Legal Assistant to
William G. Lane, Registration No. 24,761

Correspondence Address:
WILLIAM G. LANE, INC., P.C.
16485 Laguna Canyon Road, #250
Irvine, California 92618
Tel. 949-585-0348
Fax. 949-585-0494

PTO/SB/06 (07-06)
Approved for use through 1/31/2007. OMB 0651-0032
U.S. Patent and Trademark Office; U.S. DEPARTMENT OF COMMERCE
Under the Paperwork Reduction Act of 1995, no persons are required to respond to a collection of information unless it displays a valid OMB control number.

PATENT APPLICATION FEE DETERMINATION RECORD

Substitute for Form PTO-875

Application or Docket Number	Filing Date	☐ To be Mailed
10/018,164	05/20/2002	

APPLICATION AS FILED – PART I

FOR	(Column 1) NUMBER FILED	(Column 2) NUMBER EXTRA	SMALL ENTITY RATE ($)	SMALL ENTITY FEE ($)	OR	OTHER THAN SMALL ENTITY RATE ($)	OTHER THAN SMALL ENTITY FEE ($)
☐ BASIC FEE (37 CFR 1.16(a), (b), or (c))	N/A	N/A	N/A			N/A	
☐ SEARCH FEE (37 CFR 1.16(k), (i), or (m))	N/A	N/A	N/A			N/A	
☐ EXAMINATION FEE (37 CFR 1.16(o), (p), or (q))	N/A	N/A	N/A			N/A	
TOTAL CLAIMS (37 CFR 1.16(i))	minus 20 =	*	X $ =		OR	X $ =	
INDEPENDENT CLAIMS (37 CFR 1.16(h))	minus 3 =	*	X $ =			X $ =	
☐ APPLICATION SIZE FEE (37 CFR 1.16(s))	If the specification and drawings exceed 100 sheets of paper, the application size fee due is $250 ($125 for small entity) for each additional 50 sheets or fraction thereof. See 35 U.S.C. 41(a)(1)(G) and 37 CFR 1.16(s).						
☐ MULTIPLE DEPENDENT CLAIM PRESENT (37 CFR 1.16(j))							
* If the difference in column 1 is less than zero, enter "0" in column 2.			TOTAL			TOTAL	

APPLICATION AS AMENDED – PART II

AMENDMENT 10/16/2008

	(Column 1) CLAIMS REMAINING AFTER AMENDMENT		(Column 2) HIGHEST NUMBER PREVIOUSLY PAID FOR	(Column 3) PRESENT EXTRA	SMALL ENTITY RATE ($)	SMALL ENTITY ADDITIONAL FEE ($)	OR	OTHER THAN SMALL ENTITY RATE ($)	OTHER THAN SMALL ENTITY ADDITIONAL FEE ($)
Total (37 CFR 1.16(i))	* 28	Minus	** 34	= 0	X $ =		OR	X $52=	0
Independent (37 CFR 1.16(h))	* 3	Minus	***8	= 0	X $ =		OR	X $220=	0
☐ Application Size Fee (37 CFR 1.16(s))									
☐ FIRST PRESENTATION OF MULTIPLE DEPENDENT CLAIM (37 CFR 1.16(j))							OR		
					TOTAL ADD'L FEE		OR	TOTAL ADD'L FEE	0

AMENDMENT

	(Column 1) CLAIMS REMAINING AFTER AMENDMENT		(Column 2) HIGHEST NUMBER PREVIOUSLY PAID FOR	(Column 3) PRESENT EXTRA	SMALL ENTITY RATE ($)	SMALL ENTITY ADDITIONAL FEE ($)	OR	OTHER THAN SMALL ENTITY RATE ($)	OTHER THAN SMALL ENTITY ADDITIONAL FEE ($)
Total (37 CFR 1.16(i))	*	Minus	**	=	X $ =		OR	X $ =	
Independent (37 CFR 1.16(h))	*	Minus	***	=	X $ =		OR	X $ =	
☐ Application Size Fee (37 CFR 1.16(s))									
☐ FIRST PRESENTATION OF MULTIPLE DEPENDENT CLAIM (37 CFR 1.16(j))							OR		
					TOTAL ADD'L FEE		OR	TOTAL ADD'L FEE	

* If the entry in column 1 is less than the entry in column 2, write "0" in column 3.
** If the "Highest Number Previously Paid For" IN THIS SPACE is less than 20, enter "20".
*** If the "Highest Number Previously Paid For" IN THIS SPACE is less than 3, enter "3".
The "Highest Number Previously Paid For" (Total or Independent) is the highest number found in the appropriate box in column 1.

Legal Instrument Examiner:
/VENESSA JONES/

This collection of information is required by 37 CFR 1.16. The information is required to obtain or retain a benefit by the public which is to file (and by the USPTO to process) an application. Confidentiality is governed by 35 U.S.C. 122 and 37 CFR 1.14. This collection is estimated to take 12 minutes to complete, including gathering, preparing, and submitting the completed application form to the USPTO. Time will vary depending upon the individual case. Any comments on the amount of time you require to complete this form and/or suggestions for reducing this burden, should be sent to the Chief Information Officer, U.S. Patent and Trademark Office, U.S. Department of Commerce, P.O. Box 1450, Alexandria, VA 22313-1450. DO NOT SEND FEES OR COMPLETED FORMS TO THIS ADDRESS. **SEND TO: Commissioner for Patents, P.O. Box 1450, Alexandria, VA 22313-1450.**
If you need assistance in completing the form, call 1-800-PTO-9199 and select option 2.

UNITED STATES PATENT AND TRADEMARK OFFICE

UNITED STATES DEPARTMENT OF COMMERCE
United States Patent and Trademark Office
Address: COMMISSIONER FOR PATENTS
P.O. Box 1450
Alexandria, Virginia 22313-1450
www.uspto.gov

APPLICATION NO.	FILING DATE	FIRST NAMED INVENTOR	ATTORNEY DOCKET NO.	CONFIRMATION NO.
10/018,164	05/20/2002	Timothy A.M. Chuter	C010-1001A-US	8768

7590 04/11/2008

William G Lane
16485 Lagna Canyon Road #250
Irvine, CA 92618

EXAMINER
WOO, JULIAN W

ART UNIT	PAPER NUMBER
3773	

MAIL DATE	DELIVERY MODE
04/11/2008	PAPER

Please find below and/or attached an Office communication concerning this application or proceeding.

The time period for reply, if any, is set in the attached communication.

Office Action Summary	Application No.	Applicant(s)	
	10/018,164	CHUTER, TIMOTHY A.M.	
	Examiner	Art Unit	
	Julian W. Woo	3773	

-- The MAILING DATE of this communication appears on the cover sheet with the correspondence address --

Period for Reply

A SHORTENED STATUTORY PERIOD FOR REPLY IS SET TO EXPIRE 3 MONTH(S) OR THIRTY (30) DAYS, WHICHEVER IS LONGER, FROM THE MAILING DATE OF THIS COMMUNICATION.

- Extensions of time may be available under the provisions of 37 CFR 1.136(a). In no event, however, may a reply be timely filed after SIX (6) MONTHS from the mailing date of this communication.
- If NO period for reply is specified above, the maximum statutory period will apply and will expire SIX (6) MONTHS from the mailing date of this communication.
- Failure to reply within the set or extended period for reply will, by statute, cause the application to become ABANDONED (35 U.S.C. § 133). Any reply received by the Office later than three months after the mailing date of this communication, even if timely filed, may reduce any earned patent term adjustment. See 37 CFR 1.704(b).

Status

1)☒ Responsive to communication(s) filed on 1/22/08.

2a)☐ This action is **FINAL**. 2b)☒ This action is non-final.

3)☐ Since this application is in condition for allowance except for formal matters, prosecution as to the merits is closed in accordance with the practice under *Ex parte Quayle*, 1935 C.D. 11, 453 O.G. 213.

Disposition of Claims

4)☒ Claim(s) 1-5 and 16-39 is/are pending in the application.

4a) Of the above claim(s) _____ is/are withdrawn from consideration.

5)☐ Claim(s) _____ is/are allowed.

6)☒ Claim(s) 1-5 and 16-39 is/are rejected.

7)☐ Claim(s) _____ is/are objected to.

8)☐ Claim(s) _____ are subject to restriction and/or election requirement.

Application Papers

9)☐ The specification is objected to by the Examiner.

10)☐ The drawing(s) filed on _____ is/are: a)☐ accepted or b)☐ objected to by the Examiner.

Applicant may not request that any objection to the drawing(s) be held in abeyance. See 37 CFR 1.85(a).

Replacement drawing sheet(s) including the correction is required if the drawing(s) is objected to. See 37 CFR 1.121(d).

11)☐ The oath or declaration is objected to by the Examiner. Note the attached Office Action or form PTO-152.

Priority under 35 U.S.C. § 119

12)☒ Acknowledgment is made of a claim for foreign priority under 35 U.S.C. § 119(a)-(d) or (f).

a)☒ All b)☐ Some * c)☐ None of:

1.☐ Certified copies of the priority documents have been received.

2.☐ Certified copies of the priority documents have been received in Application No. _____.

3.☒ Copies of the certified copies of the priority documents have been received in this National Stage application from the International Bureau (PCT Rule 17.2(a)).

* See the attached detailed Office action for a list of the certified copies not received.

Attachment(s)

1) ☒ Notice of References Cited (PTO-892)
2) ☐ Notice of Draftsperson's Patent Drawing Review (PTO-948)
3) ☐ Information Disclosure Statement(s) (PTO/SB/08) Paper No(s)/Mail Date _____.
4) ☐ Interview Summary (PTO-413) Paper No(s)/Mail Date. _____ .
5) ☐ Notice of Informal Patent Application
6) ☐ Other: _____.

DETAILED ACTION

Continued Examination Under 37 CFR 1.114

1. A request for continued examination under 37 CFR 1.114, including the fee set forth in 37 CFR 1.17(e), was filed in this application after final rejection. Since this application is eligible for continued examination under 37 CFR 1.114, and the fee set forth in 37 CFR 1.17(e) has been timely paid, the finality of the previous Office action has been withdrawn pursuant to 37 CFR 1.114. Applicant's submission filed on January 22, 2008 has been entered.

Double Patenting

2. Claim 21 is objected to under 37 CFR 1.75 as being a substantial duplicate of claim 16. When two claims in an application are duplicates or else are so close in content that they both cover the same thing, despite a slight difference in wording, it is proper after allowing one claim to object to the other as being a substantial duplicate of the allowed claim. See MPEP § 706.03(k).

Claim Rejections - 35 USC § 102

3. The following is a quotation of the appropriate paragraphs of 35 U.S.C. 102 that form the basis for the rejections under this section made in this Office action:

> A person shall be entitled to a patent unless –
>
> (a) the invention was known or used by others in this country, or patented or described in a printed publication in this or a foreign country, before the invention thereof by the applicant for a patent.

4. Claims 1, 2, 16, 21, 22, 24-30, and 34-39 are rejected under 35 U.S.C. 102(a) as being anticipated by Ferrera et al. (WO99/29260). Ferrera.et al. disclose, at least in

figures 25-28 and on page 27, lines 10-30; an endovascular stent comprising a generally tubular stent (140) comprising a circular configuration in cross section and adapted to permanently expand from a first diameter to a larger second diameter, the stent made of at least one helically wound wire (142), each wire of the stent comprising at least two twisted strands (142), the twisted strands securing fibers (136) between the twisted strands to from a fiber pile extending outwardly from the stent, where the twisted strands securing fibers form a fiber pile extending inwardly into the stent to substantially occlude the inner bore of the stent (when the fiber pile is woven and pushed in between the coils), where the fibers are coated with a pharmaceutically acceptable hydrophilic polymeric gel compatible with mammal body tissues and fluids (e.g., collagen), where the hydrophilic polymeric gel encapsulates the fiber pile, where the gel is not soluble in the body tissues and fluids, where the fibers are biocompatible, where the stent is self-expanding or expandable to permanently expand from a first diameter to a larger second diameter, where the fiber pile is adapted to form a foundation for tissue growth between the fiber pile and a surrounding lumenal wall of a vascular vessel, where the stent is made of at least two or more helically wound wires, and where the at least one helically wound wire is wound in a first direction.

Claim Rejections - 35 USC § 103

5. The following is a quotation of 35 U.S.C. 103(a) which forms the basis for all obviousness rejections set forth in this Office action:

> (a) A patent may not be obtained though the invention is not identically disclosed or described as set forth in section 102 of this title, if the differences between the subject matter sought to be patented and the prior art are such that the subject matter as a whole would have been obvious at the time the invention was made to a person having ordinary skill in the art to which said subject matter pertains. Patentability shall not be negatived by the manner in which the invention was made.

The factual inquiries set forth in *Graham* **v.** *John Deere Co.*, 383 U.S. 1, 148 USPQ 459 (1966), that are applied for establishing a background for determining obviousness under 35 U.S.C. 103(a) are summarized as follows:

1. Determining the scope and contents of the prior art.
2. Ascertaining the differences between the prior art and the claims at issue.
3. Resolving the level of ordinary skill in the pertinent art.
4. Considering objective evidence present in the application indicating obviousness or nonobviousness.

6. Claims 3 and 17-20 rejected under 35 U.S.C. 103(a) as being unpatentable over Ferrera et al. (WO99/29260). Ferrera et al. disclose the invention substantially as claimed, but do not specifically disclose that the hydrophilic polymer gel is partially or fully hydrated (with body fluids). Nevertheless, it would have been obvious to one having ordinary skill in the art at the time the invention was made to at least partially hydrate the polymer gel (with body fluids). Such a practice would render the fiber pile more lubricious, so that the stent may be easily inserted into and moved through a vessel, while fully hydrating the gel would ensure activation and release of therapeutic agents from the gel

7. Claims 4 and 5 are rejected under 35 U.S.C. 103(a) as being unpatentable over Ferrera et al. (WO99/29260) in view of Tekulve (6,117,157). Ferrera et al. disclose the invention substantially as claimed, but do not disclose that the stent has a general conical shape prior to and after expansion with a first large diameter at one end and small diameter at the opposing end. Tekulve teaches, at least in figures 1 and 3 and col. 1, line 59 to col. 2, line 15; stent having a general conical shape prior to (See fig. 3) and after expansion (See fig. 1) with a first large diameter at one end and small

diameter at the opposing end. It would have been obvious to one having ordinary skill in the art at the time the invention was made, in view of Tekulve, to modify the stent of Ferrera et al. so that it has a conical shape as claimed. Such a configuration would allow precise positioning of the stent at an embolization site, while the turns of the coil would effectively cover and occlude the cross-sectional area of a vessel lumen.

8. Claim 23 is rejected under 35 U.S.C. 103(a) as being unpatentable over Ferrera et al. (WO99/29260) in view of DiCosmo et al. (6,132,765). Ferrera et al. disclose the invention substantially as claimed, but do not disclose one or more beads of hydrophilic gel attached to the fibers. DiCosmo et al. teach, at least in figure 5 and in col. 4, lines 17-27 and col. 7, lines 14-48; beads of hydrophilic gel attachable to the fibers. It would have been obvious to one having ordinary skill in the art at the time the invention was made, in view of DiCosmo et al., to modify the gel and fibers of the stent of Ferrera et al., so that the gel comprises one or more beads. Such a configuration would provide an effective and excellent delivery vehicle for the drugs as disclosed by Ferrera et al.

9. Claims 31-33 are rejected under 35 U.S.C. 103(a) as being unpatentable over Ferrera et al. (WO99/29260) in view of Callister et al. (6,096,052). Ferrera et al. disclose the invention substantially as claimed, but do not disclose that at least one other helically wound wire is wound in a second direction, where the helically wound wires are interwoven or cross over and cross under each other in a predetermined pattern. Callister et al. teach, at least in figures 1, 3, and 5-7 and col. 4, lines 43-60; helically wound wires that are interwoven or cross over and cross under each other in a predetermined pattern. It would have been obvious to one having ordinary skill in the

art at the time the invention was made, in view of Callister et al., to modify the stent of Ferrera et al., so that the helically wound wires are interwoven or cross over and cross under each other in a predetermined pattern. Such a configuration would allow the stent to be securely attached to the lumen of a vessel wall, while the mesh as formed by the wires would facilitate epithelialization within and occlusion of the vessel lumen.

Response to Amendment

10. Applicant's arguments with respect to claims 1-5 and 16-39 have been considered but are moot in view of the new ground(s) of rejection.

Conclusion

11. The prior art made of record and not relied upon is considered pertinent to applicant's disclosure. Greene, Jr. et al. (6,238,403) teach beads of hydrophilic polymer gel.

12. Any inquiry concerning this communication or earlier communications from the examiner should be directed to Julian W. Woo whose telephone number is (571) 272-4707. The examiner can normally be reached Mon.-Fri., 7:00 AM to 3:00 PM Eastern Time, alternate Fridays off.

If attempts to reach the examiner by telephone are unsuccessful, the examiner's supervisor, Jackie Ho can be reached on (571) 272-4696. The fax phone number for the organization where this application or proceeding is assigned is (571) 273-8300.

Information regarding the status of an application may be obtained from the Patent Application Information Retrieval (PAIR) system. Status information for published applications may be obtained from either Private PAIR or Public PAIR.

Status information for unpublished applications is available through Private PAIR only. For more information about the PAIR system, see http://pair-direct.uspto.gov. Should you have questions on access to the Private PAIR system, contact the Electronic Business Center (EBC) at 866-217-9197 (toll-free).

/Julian W. Woo/
Primary Examiner, Art Unit 3773

April 11, 2008

Notice of References Cited	Application/Control No. 10/018,164	Applicant(s)/Patent Under Reexamination CHUTER, TIMOTHY A.M.	
	Examiner Julian W. Woo	Art Unit 3773	Page 1 of 1

U.S. PATENT DOCUMENTS

*		Document Number Country Code-Number-Kind Code	Date MM-YYYY	Name	Classification
*	A	US-6,117,157	09-2000	Tekulve, Kurt J.	606/200
*	B	US-6,132,765	10-2000	DiCosmo et al.	606/191
*	C	US-6,238,403	05-2001	Greene et al.	606/108
	D	US-			
	E	US-			
	F	US-			
	G	US-			
	H	US-			
	I	US-			
	J	US-			
	K	US-			
	L	US-			
	M	US-			

FOREIGN PATENT DOCUMENTS

*		Document Number Country Code-Number-Kind Code	Date MM-YYYY	Country	Name	Classification
	N	99/29260	06-1999	WO	Ferrera et al.	A61F 2/00
	O					
	P					
	Q					
	R					
	S					
	T					

NON-PATENT DOCUMENTS

*		Include as applicable: Author, Title Date, Publisher, Edition or Volume, Pertinent Pages)
	U	
	V	
	W	
	X	

*A copy of this reference is not being furnished with this Office action. (See MPEP § 707.05(a).)
Dates in MM-YYYY format are publication dates. Classifications may be US or foreign.

UNITED STATES PATENT AND TRADEMARK OFFICE

UNITED STATES DEPARTMENT OF COMMERCE
United States Patent and Trademark Office
Address: COMMISSIONER FOR PATENTS
P.O. Box 1450
Alexandria, Virginia 22313-1450
www.uspto.gov

BIB DATA SHEET

CONFIRMATION NO. 8768

SERIAL NUMBER	FILING or 371(c) DATE	CLASS	GROUP ART UNIT	ATTORNEY DOCKET NO.
10/018,164	05/20/2002 RULE	623	3773	C010-1001A-US

APPLICANTS
Timothy A.M. Chuter, Burlingame, CA;

**** CONTINUING DATA ****************************
This application is a 371 of PCT/US01/06632 03/02/2001

**** FOREIGN APPLICATIONS ****************************
UNITED STATES OF AMERICA 60/186806 03/03/2000

**** IF REQUIRED, FOREIGN FILING LICENSE GRANTED ****

Foreign Priority claimed	☐ Yes ☑ No	☐ Met after Allowance	STATE OR COUNTRY	SHEETS DRAWINGS	TOTAL CLAIMS	INDEPENDENT CLAIMS
35 USC 119(a-d) conditions met	☐ Yes ☑ No		CA	6	15	7
Verified and Acknowledged	/JULIAN W WOO/ Examiner's Signature	Initials				

ADDRESS
William G Lane
16485 Lagna Canyon Road #250
Irvine, CA 92618
UNITED STATES

TITLE
Large vessel stents and occluders

FILING FEE RECEIVED		
1591	FEES: Authority has been given in Paper No._____ to charge/credit DEPOSIT ACCOUNT No._____ for following:	☐ All Fees ☐ 1.16 Fees (Filing) ☐ 1.17 Fees (Processing Ext. of time) ☐ 1.18 Fees (Issue) ☐ Other _____ ☐ Credit

Search Notes	Application/Control No.	Applicant(s)/Patent Under Reexamination
	10018164	CHUTER, TIMOTHY A.M.
	Examiner	**Art Unit**
	Julian W Woo	3773

SEARCHED

Class	Subclass	Date	Examiner
606	200, 191, 108	4/8/08	JWW
623	1.15, 1.2, 1.22, 1.36, 1.51-1.54	4/8/08	JWW

SEARCH NOTES

Search Notes	Date	Examiner
See attached EAST search	4/8/08	JWW
See attached EAST search	4/9/08	JWW

INTERFERENCE SEARCH

Class	Subclass	Date	Examiner

Aortic Innovations, LLC, Exhibit 2126
Page 2126 - 56
IPR2023-01325, Edwards Lifesciences Corp. et al v. Aortic Innovations, LLC

Index of Claims	Application/Control No.	Applicant(s)/Patent Under Reexamination
	10018164	CHUTER, TIMOTHY A.M.
	Examiner	**Art Unit**
	Julian W Woo	3773

✓	Rejected	-	Cancelled	N	Non-Elected	A	Appeal
=	Allowed	÷	Restricted	I	Interference	O	Objected

☐ Claims renumbered in the same order as presented by applicant ☐ CPA ☐ T.D. ☐ R.1.47

CLAIM		DATE								
Final	Original	04/10/2008								
	1	✓								
	2	✓								
	3	✓								
	4	✓								
	5	✓								
	6	-								
	7	-								
	8	-								
	9	-								
	10	-								
	11	-								
	12	-								
	13	-								
	14	-								
	15	-								
	16	✓								
	17	✓								
	18	✓								
	19	✓								
	20	✓								
	21	✓								
	22	✓								
	23	✓								
	24	✓								
	25	✓								
	26	✓								
	27	✓								
	28	✓								
	29	✓								
	30	✓								
	31	✓								
	32	✓								
	33	✓								
	34	✓								
	35	✓								
	36	✓								

Index of Claims	Application/Control No.	Applicant(s)/Patent Under Reexamination
	10018164	CHUTER, TIMOTHY A.M.
	Examiner	**Art Unit**
	Julian W Woo	3773

✓	Rejected	-	Cancelled	N	Non-Elected	A	Appeal
=	Allowed	÷	Restricted	I	Interference	O	Objected

☐ Claims renumbered in the same order as presented by applicant ☐ CPA ☐ T.D. ☐ R.1.47

CLAIM		DATE								
Final	Original	04/10/2008								
	37	✓								
	38	✓								
	39	✓								

Aortic Innovations, LLC, Exhibit 2126
Page 2126 - 58
IPR2023-01325, Edwards Lifesciences Corp. et al v. Aortic Innovations, LLC

EAST Search History

Ref #	Hits	Search Query	DBs	Default Operator	Plurals	Time Stamp
S1	4	(("6432116") or ("6432134") or ("6432034") or ("5443907")).PN.	USPAT	OR	OFF	2008/04/08 08:17
S2	3	(("6432116") or ("6432134") or ("5443907")).PN.	USPAT	OR	OFF	2008/04/08 08:19
S3	5522	((606/200) or (606/191) or (623/1.15) or (623/1.2) or (623/1.22) or (623/1.36) or (623/1.51) or (623/1.52) or (623/1.53) or (623/1.54)).CCLS.	US-PGPUB; USPAT; EPO; JPO	OR	OFF	2008/04/08 15:24
S4	1661	S3 and helical	US-PGPUB; USPAT; EPO; JPO	OR	ON	2008/04/08 15:25
S5	706	S4 and fiber	US-PGPUB; USPAT; EPO; JPO	OR	ON	2008/04/08 15:25
S6	176	S5 and twisted	US-PGPUB; USPAT; EPO; JPO	OR	ON	2008/04/08 15:25
S7	91	S5 and twisted	USPAT; EPO; JPO	OR	ON	2008/04/08 15:26
S8	10	("3334629" | "3868956" | "4494531" | "4655771" | "4718907" | "4830003" | "4856516" | "4994069" | "5071407").PN.	US-PGPUB; USPAT; USOCR	OR	ON	2008/04/08 15:27
S9	137	("5304194").URPN.	USPAT	OR	ON	2008/04/08 15:28
S10	19	nuwayser.in.	USPAT	OR	ON	2008/04/08 15:31
S11	5	("3042021" | "3589355" | "3598126" | "3613661").PN.	US-PGPUB; USPAT; USOCR	OR	ON	2008/04/08 15:31
S12	41	("3687129").URPN.	USPAT	OR	ON	2008/04/08 15:31

S13	291	contraceptive and helical	USPAT	OR	ON	2008/04/08 15:34
S14	18	("2701559" | "3881464" | "4227537" | "4235244" | "4754764" | "4759376" | "4763670" | "4966162" | "5133361" | "5146928" | "5184626" | "5201323" | "5217023" | "5253652" | "5370128" | "5456265" | "D317361").PN.	US-PGPUB; USPAT; USOCR	OR	ON	2008/04/08 15:39
S15	6	("5713369").URPN.	USPAT	OR	ON	2008/04/08 15:40
S16	6	("5713369").URPN.	USPAT	OR	ON	2008/04/09 06:48
S17	18	("2701559" | "3881464" | "4227537" | "4235244" | "4754764" | "4759376" | "4763670" | "4966162" | "5133361" | "5146928" | "5184626" | "5201323" | "5217023" | "5253652" | "5370128" | "5456265" | "D317361").PN.	US-PGPUB; USPAT; USOCR	OR	ON	2008/04/09 06:49
S18	6	("3776219" | "3881464" | "4108162" | "4127113" | "4227537" | "4395943").PN.	US-PGPUB; USPAT; USOCR	OR	ON	2008/04/09 06:50
S19	19	("4395943").URPN.	USPAT	OR	ON	2008/04/09 06:50
S20	19	("4706671" | "4994069" | "5108407" | "5108420" | "5122136" | "5133709" | "5133731" | "5167624" | "5190546" | "5192301" | "5217484" | "5226911" | "5234437" | "5250071" | "5261916" | "5267955" | "5304194" | "5522822" | "5540680").PN.	US-PGPUB; USPAT; USOCR	OR	ON	2008/04/09 07:06
S21	24553	coil and brush	US-PGPUB; USPAT; EPO; JPO	OR	ON	2008/04/09 07:07

S22	4300	S21 and fiber	US-PGPUB; USPAT; EPO; JPO	OR	ON	2008/04/09 07:07
S23	766	S22 and strand	US-PGPUB; USPAT; EPO; JPO	OR	ON	2008/04/09 07:07
S24	389	S22 and strand	USPAT; EPO; JPO	OR	ON	2008/04/09 07:07
S25	0	endmetrial and coil	US-PGPUB; USPAT; EPO; JPO	OR	ON	2008/04/09 07:14
S26	1443	endometrial and coil	US-PGPUB; USPAT; EPO; JPO	OR	ON	2008/04/09 07:14
S27	869	S26 and fiber	US-PGPUB; USPAT; EPO; JPO	OR	ON	2008/04/09 07:14
S28	191	S26 and fiber	USPAT	OR	ON	2008/04/09 07:15
S29	474	endometrial and helical	USPAT	OR	ON	2008/04/09 07:17
S30	191	S29 and fiber	USPAT	OR	ON	2008/04/09 07:17
S31	6	("3077879" | "3635215" | "3771520" | "4227537" | "4372302").PN.	US-PGPUB; USPAT; USOCR	OR	ON	2008/04/09 07:19
S32	3	("4561433").URPN.	USPAT	OR	ON	2008/04/09 07:19
S33	7048	twisted with strand	US-PGPUB; USPAT; EPO; JPO	OR	ON	2008/04/09 07:21
S34	3642	S33 and fiber	US-PGPUB; USPAT; EPO; JPO	OR	ON	2008/04/09 07:21
S35	599	S34 and coil	US-PGPUB; USPAT; EPO; JPO	OR	ON	2008/04/09 07:21
S36	367	S34 and coil	USPAT	OR	ON	2008/04/09 07:22

S37	222	("1341052" | "1667730" | "20070016233" | "2078182" | "2549335" | "3334629" | "3452745" | "3485234" | "3649224" | "3868956" | "4161952" | "4205680" | "4257421" | "4494531" | "4500658" | "4502482" | "4512338" | "4553545" | "4580568" | "4629458" | "4638803" | "4655771" | "4670286" | "4682607" | "4718907" | "4748986" | "4768507" | "4795458" | "4795741" | "4798606" | "4800882" | "4813925" | "4820298" | "4830003" | "4832055" | "4850960" | "4856516" | "4922924" | "4932419" | "4950258" | "4954126" | "4957479" | "4957501" | "4990155" | "4994069" | "4998916" | "5019090" | "5025799" | "5026377" | "5037377" | "5037391" | "5041084" | "5055101" | "5061275" | "5063935" | "5064435" | "5065769" | "5071407" | "5092847" | "5104404" | "5108407" | "5111829" | "5122136" | "5129890" | "5133731" | "5133732" | "5135516" | "5139243" | "5141502" | "5143085" | "5147370" | "5151105" | "5152784" | "5160341" | "5167233" | "5171273" | "5174302" | "5176625" | "5176661" | "5183085" | "5184627" | "5186992" | "5197977" | "5203772" | "5211183" | "5211658"	US-PGPUB; USPAT; USOCR	OR	ON	2008/04/09 07:29

| "5213111" | "5217484" | "5222969" | "5226911" | "5228453" | "5230348" | "5234437" | "5234456" | "5238004" | "5241970" | "5243996" | "5246014" | "5250071" | "5251640" | "5253653" | "5256146" | "5258042" | "5259393" | "5303714" | "5304121" | "5304194" | "5312415" | "5336205" | "5341818" | "5342387" | "5350397" | "5354295" | "5356388" | "5368049" | "5373856" | "5382259" | "5386828" | "5409015" | "5413597" | "5417708" | "5421338" | "5423829" | "5423849").PN. OR ("5429597" | "5437282" | "5439485" | "5441516" | "5443478" | "5460187" | "5462523" | "5465732" | "5486193" | "5514115" | "5514128" | "5514176" | "5520194" | "5522819" | "5522822" | "5522836" | "5523092" | "5527338" | "5527354" | "5531715" | "5540680" | "5540701" | "5540713" | "5549624" | "5549663" | "5562641" | "5562698" | "5569245" | "5582619" | "5601593" | "5603694" | "5607445" | "5609627" | "5618301" | "5624449" | "5624461" | "5632772" | "5637113" | "5639277" | "5643254" | "5645082" | "5645558" | "5649949" | "5658308" | "5667522" | "5669931" | "5669933" | "5676697"

		| "5683411" | "5690643" | "5690666" | "5690667" | "5690671" | "5693085" | "5700258" | "5709707" | "5718711" | "5720764" | "5725572" | "5733294" | "5733326" | "5733329" | "5741327" | "5749891" | "5749894" | "5762615" | "5766219" | "5782909" | "5800511" | "5800525" | "5814062" | "5814064" | "5817100" | "5824042" | "5824045" | "5824071" | "5824077" | "5843118" | "5876432" | "6013084" | "6093199" | "6136015" | "6159165" | "6168592" | "6171326" | "6193708" | "6287331" | "6306153" | "6340367" | "6399886" | "6616617").PN.				
S38	222	("1341052" | "1667730" | "20070016233" | "2078182" | "2549335" | "3334629" | "3452745" | "3485234" | "3649224" | "3868956" | "4161952" | "4205680" | "4257421" | "4494531" | "4500658" | "4502482" | "4512338" | "4553545" | "4580568" | "4629458" | "4638803" | "4655771" | "4670286" | "4682607" | "4718907" | "4748986" | "4768507" | "4795458" | "4795741" | "4798606" | "4800882" | "4813925" | "4820298" | "4830003" | "4832055" | "4850960" | "4856516" | "4922924" | "4932419" | "4950258" | "4954126" | "4957479" |	US-PGPUB; USPAT; USOCR	OR	ON	2008/04/09 07:29

		"4957501" | "4990155" | "4994069" | "4998916" | "5019090" | "5025799" | "5026377" | "5037377" | "5037391" | "5041084" | "5055101" | "5061275" | "5063935" | "5064435" | "5065769" | "5071407" | "5092847" | "5104404" | "5108407" | "5111829" | "5122136" | "5129890" | "5133731" | "5133732" | "5135516" | "5139243" | "5141502" | "5143085" | "5147370" | "5151105" | "5152784" | "5160341" | "5167233" | "5171273" | "5174302" | "5176625" | "5176661" | "5183085" | "5184627" | "5186992" | "5197977" | "5203772" | "5211183" | "5211658" | "5213111" | "5217484" | "5222969" | "5226911" | "5228453" | "5230348" | "5234437" | "5234456" | "5238004" | "5241970" | "5243996" | "5246014" | "5250071" | "5251640" | "5253653" | "5256146" | "5258042" | "5259393" | "5303714" | "5304121" | "5304194" | "5312415" | "5336205" | "5341818" | "5342387" | "5350397" | "5354295" | "5356388" | "5368049" | "5373856" | "5382259" | "5386828" | "5409015" | "5413597" | "5417708" | "5421338" | "5423829" | "5423849").PN. OR ("5429597" | "5437282" | "5439485" | "5441516" |				

		"5443478" | "5460187" | "5462523" | "5465732" | "5486193" | "5514115" | "5514128" | "5514176" | "5520194" | "5522819" | "5522822" | "5522836" | "5523092" | "5527338" | "5527354" | "5531715" | "5540680" | "5540701" | "5540713" | "5549624" | "5549663" | "5562641" | "5562698" | "5569245" | "5582619" | "5601593" | "5603694" | "5607445" | "5609627" | "5618301" | "5624449" | "5624461" | "5632772" | "5637113" | "5639277" | "5643254" | "5645082" | "5645558" | "5649949" | "5658308" | "5667522" | "5669931" | "5669933" | "5676697" | "5683411" | "5690643" | "5690666" | "5690667" | "5690671" | "5693085" | "5700258" | "5709707" | "5718711" | "5720764" | "5725572" | "5733294" | "5733326" | "5733329" | "5741327" | "5749891" | "5749894" | "5762615" | "5766219" | "5782909" | "5800511" | "5800525" | "5814062" | "5814064" | "5817100" | "5824042" | "5824045" | "5824071" | "5824077" | "5843118" | "5876432" | "6013084" | "6093199" | "6136015" | "6159165" | "6168592" | "6171326" | "6193708" | "6287331" | "6306153" | "6340367" | "6399886" | "6616617").PN.				

S39	222	("1341052" | "1667730" | "20070016233" | "2078182" | "2549335" | "3334629" | "3452745" | "3485234" | "3649224" | "3868956" | "4161952" | "4205680" | "4257421" | "4494531" | "4500658" | "4502482" | "4512338" | "4553545" | "4580568" | "4629458" | "4638803" | "4655771" | "4670286" | "4682607" | "4718907" | "4748986" | "4768507" | "4795458" | "4795741" | "4798606" | "4800882" | "4813925" | "4820298" | "4830003" | "4832055" | "4850960" | "4856516" | "4922924" | "4932419" | "4950258" | "4954126" | "4957479" | "4957501" | "4990155" | "4994069" | "4998916" | "5019090" | "5025799" | "5026377" | "5037377" | "5037391" | "5041084" | "5055101" | "5061275" | "5063935" | "5064435" | "5065769" | "5071407" | "5092847" | "5104404" | "5108407" | "5111829" | "5122136" | "5129890" | "5133731" | "5133732" | "5135516" | "5139243" | "5141502" | "5143085" | "5147370" | "5151105" | "5152784" | "5160341" | "5167233" | "5171273" | "5174302" | "5176625" | "5176661" | "5183085" | "5184627" | "5186992" | "5197977" | "5203772" | "5211183" | "5211658"	US-PGPUB; USPAT; USOCR	OR	ON	2008/04/09 07:30

| "5213111" | "5217484" | "5222969" | "5226911" | "5228453" | "5230348" | "5234437" | "5234456" | "5238004" | "5241970" | "5243996" | "5246014" | "5250071" | "5251640" | "5253653" | "5256146" | "5258042" | "5259393" | "5303714" | "5304121" | "5304194" | "5312415" | "5336205" | "5341818" | "5342387" | "5350397" | "5354295" | "5356388" | "5368049" | "5373856" | "5382259" | "5386828" | "5409015" | "5413597" | "5417708" | "5421338" | "5423829" | "5423849").PN. OR ("5429597" | "5437282" | "5439485" | "5441516" | "5443478" | "5460187" | "5462523" | "5465732" | "5486193" | "5514115" | "5514128" | "5514176" | "5520194" | "5522819" | "5522822" | "5522836" | "5523092" | "5527338" | "5527354" | "5531715" | "5540680" | "5540701" | "5540713" | "5549624" | "5549663" | "5562641" | "5562698" | "5569245" | "5582619" | "5601593" | "5603694" | "5607445" | "5609627" | "5618301" | "5624449" | "5624461" | "5632772" | "5637113" | "5639277" | "5643254" | "5645082" | "5645558" | "5649949" | "5658308" | "5667522" | "5669931" | "5669933" | "5676697"

		| "5683411" | "5690643" | "5690666" | "5690667" | "5690671" | "5693085" | "5700258" | "5709707" | "5718711" | "5720764" | "5725572" | "5733294" | "5733326" | "5733329" | "5741327" | "5749891" | "5749894" | "5762615" | "5766219" | "5782909" | "5800511" | "5800525" | "5814062" | "5814064" | "5817100" | "5824042" | "5824045" | "5824071" | "5824077" | "5843118" | "5876432" | "6013084" | "6093199" | "6136015" | "6159165" | "6168592" | "6171326" | "6193708" | "6287331" | "6306153" | "6340367" | "6399886" | "6616617").PN.				
S40	2	(("6616617") or ("6159165")).PN.	USPAT	OR	OFF	2008/04/09 07:51
S41	5	("4994069" | "5226911" | "5304194" | "5522836" | "5527338").PN.	US-PGPUB; USPAT; USOCR	OR	ON	2008/04/09 10:09
S42	23	("5700258").URPN.	USPAT	OR	ON	2008/04/09 10:09
S43	5522	((606/200) or (606/191) or (623/1.15) or (623/1.2) or (623/1.22) or (623/1.36) or (623/1.51) or (623/1.52) or (623/1.53) or (623/1.54)).CCLS.	US-PGPUB; USPAT; EPO; JPO	OR	OFF	2008/04/09 11:30
S44	405	S43 and hydrogel	US-PGPUB; USPAT; EPO; JPO	OR	ON	2008/04/09 11:30
S45	147	S44 and filament	US-PGPUB; USPAT; EPO; JPO	OR	ON	2008/04/09 11:30

S46	46	S44 and filament	USPAT; EPO; JPO	OR	ON	2008/04/09 11:31
S47	23	S46 and particle	USPAT; EPO; JPO	OR	ON	2008/04/09 11:50
S48	0	"99292690"	EPO; DERWENT	OR	ON	2008/04/09 12:02
S49	0	"wo99/292690"	EPO; DERWENT	OR	ON	2008/04/09 12:02
S50	58	"292690"	EPO; DERWENT	OR	ON	2008/04/09 12:02
S51	15	(david with ferrera).in.	EPO; DERWENT	OR	ON	2008/04/09 12:04
S52	31	("4517979" | "4544367" | "4550126" | "4890612" | "4994069" | "5061274" | "5108407" | "5122136" | "5334210" | "5382259" | "5527338" | "5690761" | "5749894" | "5766219" | "5776184" | "5823198" | "5833705" | "5853418" | "5891192" | "5891558" | "5895407" | "5904703" | "6015424" | "6113629" | "6159165" | "6165193" | "6238403" | "6245090" | "6299619" | "6375669" | "6723108").PN.	US-PGPUB; USPAT; USOCR	OR	ON	2008/04/09 12:06
S53	31	("3709842" | "4301803" | "4365621" | "4402319" | "4509504" | "4529739" | "4663358" | "5120349" | "5129180" | "5226911" | "5258042" | "5304194" | "5350397" | "5354290" | "5456693" | "5541234" | "5573994" | "5582619" | "5624685" | "5645558" | "5672634" | "5750585" | "5752974" | "5766160" | "5766219" | "5823198" | "5891155" | "5980514" | "6066149" | "6093199").PN.	US-PGPUB; USPAT; USOCR	OR	ON	2008/04/09 12:13

S54	15	("6238403").URPN.	USPAT	OR	ON	2008/04/09 12:21
S55	49	S44 and bead	US-PGPUB; USPAT; EPO; JPO	OR	ON	2008/04/09 12:22

4/10/08 11:47:02 AM
C:\Documents and Settings\jwoo1\My Documents\EAST\workspaces\018164.wsp

PCT

WORLD INTELLECTUAL PROPERTY ORGANIZATION
International Bureau

INTERNATIONAL APPLICATION PUBLISHED UNDER THE PATENT COOPERATION TREATY (PCT)

(51) International Patent Classification 6 : A61F 2/00

A2

(11) International Publication Number: WO 99/29260

(43) International Publication Date: 17 June 1999 (17.06.99)

(21) International Application Number: PCT/US98/25822

(22) International Filing Date: 4 December 1998 (04.12.98)

(30) Priority Data:

08/986,004	5 December 1997 (05.12.97)	US
09/019,841	6 February 1998 (06.02.98)	US

(71) Applicant (*for all designated States except US*): MICRUS CORPORATION [US/US]; 495 Clyde Avenue, Mountain View, CA 94043 (US).

(72) Inventors; and
(75) Inventors/Applicants (*for US only*): FERRERA, David, A. [US/US]; 848 38th Avenue, San Francisco, CA 94121 (US). KURZ, Daniel, R. [US/US]; 341 S. Bernard Avenue, Sunnyvale, CA 94086 (US). LEI, Lok, A. [US/US]; 7086 Coral Gables Circle, San Jose, CA 95139 (US). LARSEN, Julia, A. [US/US]; 1547 Shoal Drive, San Mateo, CA 94404 (US).

(74) Agents: PAUL, James, W. et al.; Fulwider Patton Lee & Utecht, LLP, 10th floor, 10877 Wilshire Boulevard, Los Angeles, CA 90024 (US).

(81) Designated States: AL, AM, AT, AU, AZ, BA, BB, BG, BR, BY, CA, CH, CN, CU, CZ, DE, DK, EE, ES, FI, GB, GE, GH, GM, HR, HU, ID, IL, IS, JP, KE, KG, KP, KR, KZ, LC, LK, LR, LS, LT, LU, LV, MD, MG, MK, MN, MW, MX, NO, NZ, PL, PT, RO, RU, SD, SE, SG, SI, SK, SL, TJ, TM, TR, TT, UA, UG, US, UZ, VN, YU, ZW, ARIPO patent (GH, GM, KE, LS, MW, SD, SZ, UG, ZW), Eurasian patent (AM, AZ, BY, KG, KZ, MD, RU, TJ, TM), European patent (AT, BE, CH, CY, DE, DK, ES, FI, FR, GB, GR, IE, IT, LU, MC, NL, PT, SE), OAPI patent (BF, BJ, CF, CG, CI, CM, GA, GN, GW, ML, MR, NE, SN, TD, TG).

Published
Without international search report and to be republished upon receipt of that report.

(54) Title: VASOOCCLUSIVE DEVICE FOR TREATMENT OF ANEURYSMS

(57) Abstract

The three-dimensional device is adapted to be inserted into a portion of a vasculature for occluding the portion of the vasculature for use in interventional therapy and vascular surgery. The device is formed from a multi-stranded micro-cable having a plurality of flexible strands of a shape memory material and at least one radiopaque strand. The flexible strands in a multi-stranded micro-cable of the device can be helically wound, or can be configured as parallel, longitudinal strands, and can also be formed to have a secondary, three-dimensional therapeutic configuration, such as helical, conical, spherical, or other geometric shapes. The strands can be made of a shape memory nickel titanium alloy, that is highly flexible at a temperature appropriate for introduction into the body via a catheter, and that after placement will take on the therapeutic shape. The device can also include a therapeutic agent, and can be bundled by an outer cover to constrain the strands of the micro-cable about a longitudinal axis to produce a composite banded cable. The radiopaque strand can have a core strand with a plurality of intermittently spaced apart enlarged radiopaque portions that may be a plurality of beads of radiopaque material spaced apart and mounted on the core strand, or a plurality of coils intermittently wound about and spaced apart on the core strand. A polyhedral occlusive device is also provided, adapted to be inserted into a portion of a vasculature for occluding a portion of the vasculature, for use in interventional therapy and vascular surgery. One or more therapeutic fibers can also be woven into the coil to enhance treatment of the side after placement of the device.

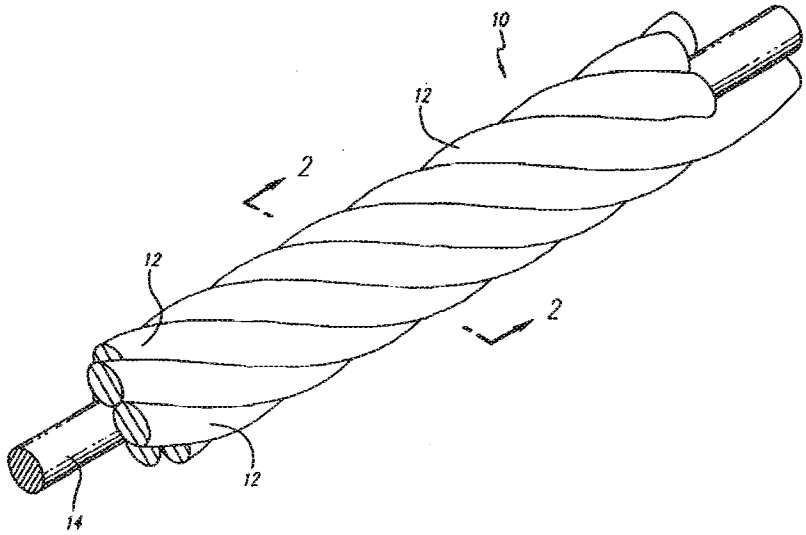

FOR THE PURPOSES OF INFORMATION ONLY

Codes used to identify States party to the PCT on the front pages of pamphlets publishing international applications under the PCT.

AL	Albania	ES	Spain	LS	Lesotho	SI	Slovenia
AM	Armenia	FI	Finland	LT	Lithuania	SK	Slovakia
AT	Austria	FR	France	LU	Luxembourg	SN	Senegal
AU	Australia	GA	Gabon	LV	Latvia	SZ	Swaziland
AZ	Azerbaijan	GB	United Kingdom	MC	Monaco	TD	Chad
BA	Bosnia and Herzegovina	GE	Georgia	MD	Republic of Moldova	TG	Togo
BB	Barbados	GH	Ghana	MG	Madagascar	TJ	Tajikistan
BE	Belgium	GN	Guinea	MK	The former Yugoslav Republic of Macedonia	TM	Turkmenistan
BF	Burkina Faso	GR	Greece			TR	Turkey
BG	Bulgaria	HU	Hungary	ML	Mali	TT	Trinidad and Tobago
BJ	Benin	IE	Ireland	MN	Mongolia	UA	Ukraine
BR	Brazil	IL	Israel	MR	Mauritania	UG	Uganda
BY	Belarus	IS	Iceland	MW	Malawi	US	United States of America
CA	Canada	IT	Italy	MX	Mexico	UZ	Uzbekistan
CF	Central African Republic	JP	Japan	NE	Niger	VN	Viet Nam
CG	Congo	KE	Kenya	NL	Netherlands	YU	Yugoslavia
CH	Switzerland	KG	Kyrgyzstan	NO	Norway	ZW	Zimbabwe
CI	Côte d'Ivoire	KP	Democratic People's Republic of Korea	NZ	New Zealand		
CM	Cameroon			PL	Poland		
CN	China	KR	Republic of Korea	PT	Portugal		
CU	Cuba	KZ	Kazakstan	RO	Romania		
CZ	Czech Republic	LC	Saint Lucia	RU	Russian Federation		
DE	Germany	LI	Liechtenstein	SD	Sudan		
DK	Denmark	LK	Sri Lanka	SE	Sweden		
EE	Estonia	LR	Liberia	SG	Singapore		

VASOOCCLUSIVE DEVICE FOR TREATMENT OF ANEURYSMS

RELATED APPLICATIONS:

This is a continuation-in-part of Serial No. 09/019,841 filed February 6, 1998, which was a continuation-in-part of Serial No. 08/986,004 filed December 5, 1997.

BACKGROUND OF THE INVENTION

Field of the Invention:

This invention relates generally to implantable devices for interventional therapeutic treatment or vascular surgery, and concerns a stranded micro-cable with enhanced radiopacity that can be used to fabricate a vascular device, a stent, a guidewire or the like. More particularly, the invention relates to three dimensional microcoil vasoocclusive devices fabricated from stranded micro-cable.

Description of Related Art:

The art and science of interventional therapy and surgery has continually progressed towards treatment of internal defects and diseases by use of ever smaller incisions or access through the vasculature or body openings, in order to reduce the trauma to tissue surrounding the treatment site. One important aspect of such treatments involves the use of catheters to place therapeutic devices at a treatment site by access through the vasculature. Examples of such procedures include transluminal angioplasty, placement of stents to reinforce the walls of a blood vessel or the like and the use of vasoocclusive devices to treat defects in the vasculature. There is a constant drive by those practicing in the art to develop new and more capable systems for such applications. When coupled with developments in biological treatment capabilities, there is an expanding need for technologies that enhance the performance of

interventional therapeutic devices and systems.

One specific field of interventional therapy that has been able to advantageously use recent developments in technology is the treatment of neurovascular defects. More specifically, as smaller and more capable structures and materials have been developed, treatment of vascular defects in the human brain which were previously untreatable or represented unacceptable risks via conventional surgery have become amenable to treatment. One type of non-surgical therapy that has become advantageous for the treatment of defects in the neurovasculature has been the placement by way of a catheter of vasoocclusive devices in a damaged portion of a vein or artery.

Vasoocclusion devices are therapeutic devices that are placed within the vasculature of the human body, typically via a catheter, either to block the flow of blood through a vessel making up that portion of the vasculature through the formation of an embolus or to form such an embolus within an aneurysm stemming from the vessel. The vasoocclusive devices can take a variety of configurations, and are generally formed of one or more elements that are larger in the deployed configuration than when they are within the delivery catheter prior to placement. One widely used vasoocclusive device is a helical wire coil having a deployed configuration which may be dimensioned to engage the walls of the vessels. One anatomically shaped vasoocclusive device that forms itself into a shape of an anatomical cavity such as an aneurysm and is made of a pre-formed strand of flexible material that can be a nickel-titanium alloy is known from U.S. Patent No. 5,645,558, which is specifically incorporated by reference herein. That vasoocclusive device comprises one or more vasoocclusive members wound to form a generally spherical or ovoid shape in a relaxed state. The vasoocclusive members can be a helically wound coil or a co-woven braid formed of a biocompatible material, and the device is sized and shaped to fit within a vascular cavity or vesicle, such as for treatment of an aneurysm or fistula. The vasoocclusive member can be first helically wound or braided in a generally linear fashion, and is then wound around an appropriately shaped mandrel or form, and heat treated to retain the shape after removal from the heating form. Radiopacity can be provided in the vasoocclusive members by weaving

in synthetic or natural fibers filled with powdered radiopaque material, such as powdered tantalum, powdered tungsten, powdered bismuth oxide or powdered barium sulfate, which can potentially be released during vascular surgery.

Another occlusion device for closing defects in vascular walls is known that is formed by a pair of distinct sections of varying configuration, which may be parabolic or conical bodies oriented to flare outward. Yet another implantable vasoocclusive device is known that is formed by a complex, helically wound coil adapted to take on a secondary shape suitable for snugly fitting within a given vascular cavity upon deployment, that can be formed by winding the coil on a mandrel having radially extending poles.

The delivery of such vasoocclusive devices can be accomplished by a variety of means, including via a catheter in which the device is pushed through the catheter by a pusher to deploy the device. The vasoocclusive devices, which can have a primary shape of a coil of wire that is then formed into a more complex secondary shape, can be produced in such a way that they will pass through the lumen of a catheter in a linear shape and take on a complex shape as originally formed after being deployed into the area of interest, such as an aneurysm. A variety of detachment mechanisms to release the device from a pusher have been developed and are known in the art.

For treatment of areas of the small diameter vasculature such as a small artery or vein in the brain, for example, and for treatment of aneurysms and the like, micro-coils formed of very small diameter wire are used in order to restrict, reinforce, or to occlude such small diameter areas of the vasculature. A variety of materials have been suggested for use in such micro-coils, including nickel-titanium alloys, copper, stainless steel, platinum, tungsten, various plastics or the like, each of which offers certain benefits in various applications. Nickel-titanium alloys are particularly advantageous for the fabrication of such micro coils, in that they can have super-elastic or shape memory properties, and thus can be manufactured to easily fit into a linear portion of a catheter, but attain their originally formed, more complex shape when deployed. Although various materials are more or less kink resistant when nickel-titanium alloys are dimensioned into wire smaller than approximately 0.010

inches in diameter, they can have low yield strength and can kink more easily, thus severely limiting the applications for such finely drawn wire in the fabrication of vasoocclusive devices. As a further limitation to such applications, nickel-titanium alloys are also not radiopaque in small diameters, and a single nickel-titanium wire would need to be approximately 0.012 inches in diameter to be even slightly radiopaque. However, such a thickness of a single nickel-titanium wire would unfortunately also be relatively stiff and possibly traumatic to the placement site, particularly if used for treatment of delicate and already damaged areas of the small diameter vasculature such as an aneurysm in an artery or vein in the brain, for example.

One conventional guidewire for use in a catheter is known that is made of a high elasticity nickel-titanium alloy, and is useful for accessing peripheral or soft tissue targets. The distal tip of the guidewire is provided with a radiopaque flexible coil tip, and a radiopaque end cap is attached to the guidewire by a radiopaque ribbon. Such a construction is complex to manufacture, fragile and can potentially break off during use with undesirable results. A stretch resistant vasoocclusive coil is also known that can be made of a primary helically wound coil of platinum wire, with a stretch-resisting wire attached within the primary coil between two end caps. Unfortunately, such a construction is relatively difficult to fabricate and also fragile, allowing for the possibility of the fracture of the central radiopaque wire, the coil, the welds or some combination of them, and it can also potentially break off during use. Also, such a construction has a complex and nonlinear bending characteristic, dependent on the spacing of the coils and central wire and the radius of the bend of the coil.

From the above, it can be seen that vasoocclusive devices and their attendant deployment systems provide important improvements in the treatment of damaged neurovascular areas. However, there remain important limitations in the technology presently available to fabricate these devices. It would therefore be desirable to provide a structural element that can be incorporated into a stent, guidewire, micro-coil or the like, which offers the advantages of a shape memory alloy such as a nickel-titanium alloy, and that incorporates radiopaque material in a

stable configuration that is not subject to breaking during use of the device, so that the device can be visualized under fluoroscopy. It would also be desirable to be able to create a variety of three dimensional vasoocclusive shapes that can be deployed from a catheter into an aneurysm or other defect and to thereby provide an efficient therapy for treatment of the defect. The present invention meets these and other needs.

SUMMARY OF THE INVENTION

Significant advances have been made in the treatment of neurovascular defects without resolution to surgery. More specifically, micro catheters have been developed which allow the placement of vasoocclusive devices in an area of the vasculature which has been damaged. In presently used techniques, the vasoocclusive devices take the form of spiral wound wires that can take more complex three dimensional shapes as they are inserted into the area to be treated. By using materials that are highly flexible, or even super-elastic and relatively small in diameter, the wires can be installed in a micro-catheter in a relatively linear configuration and assume a more complex shape as it is forced from the distal end of the catheter.

In order to gain the advantages presently being realized with micro-catheter therapies and procedures to repair damage to the vasculature in the brain and other vessels, shape memory materials such as nickel-titanium alloys have been incorporated in vasoocclusive devices to be placed by the catheters. However, the range of diameters of wire and the configurations of the resulting geometry of both the coils and the devices developed which can be used have been limited by both the relatively small diameter of wire that must be used to avoid trauma and allow housing within the catheter prior to deployment, and the requirement for larger diameters to provide for radiopaque markers and mechanical robustness. In many cases this has resulted in primary wire characteristics in the coil that are unacceptably stiff, very delicate, or subject to kinking. The present invention obtains significant advantages over such prior art devices by providing a cable of multiple strands of an alloy adapted to be used in catheters, stents, vasoocclusive devices, guidewires and the like, thus providing a kink resistant, high strength material with highly desirable performance

characteristics which can be altered by construction details to suit a variety of interventional therapeutic procedures.

More specifically, it has been found that single strands of small diameter nickel-titanium alloys, as well as other metal alloys, used to form vasoocclusive devices can be kinked if twisted and pulled as can occur during or after deployment from a catheter, especially if the doctor wishes to withdraw a partially deployed coil because it is somehow incorrect in size, shape or length to repair the damage to the vessel. Also, single wire coils are more likely to cause trauma to the area to be treated if the wire is of a sufficient diameter to provide adequate tensile strength. Furthermore, such small diameter wires of some of these materials such as nickel-titanium, stainless steel and the like, are not generally radiopaque with currently available equipment, necessitating the use of radiopaque markers attached to the device, with the resultant possible diminution of functionality and increased diameter.

The present invention solves these and other problems by providing, in its broadest aspect, a micro-cable which includes at least one radiopaque strand to offer a continuous indication under fluoroscopy of the deployed configuration of the device incorporating the micro-cable. When combined with the benefits of a material such as nickel-titanium in the other strands of the micro-cable, numerous advantages are available from the use of this basic construction in interventional medicine.

Briefly, and in general terms, a presently preferred embodiment of the present invention provides for a multi-stranded micro-cable made of a suitable material such as stainless steel or a nickel-titanium alloy, with the cable including at least one radiopaque strand, made of platinum, tungsten or gold, in order to serve as a marker during a procedure. The multi-stranded micro-cable can be configured into a stent, guidewire, micro-coil or the like used in micro-catheters, for example, to restrict, reinforce, or to occlude areas of the small diameter vasculature such as an artery or vein in the brain, for example, for treatment of aneurysms and the like.

In one presently preferred embodiment, the invention accordingly provides for a multi-stranded micro-cable formed of a plurality of flexible strands of a super elastic material, and at least one radiopaque strand. In one presently preferred embodiment, the multi-stranded micro-cable comprises a plurality of flexible strands

of nickel-titanium alloy, the micro-cable having at least one central axially disposed radiopaque wire, such as platinum, tungsten or gold, for example, in order to provide a radiopaque marker during vascular procedures. In this preferred embodiment, the construction of the invention places the lowest tensile strength and highest flexibility member, the radiopaque marker strand, in a position in the cable which results in minimum stress on that member; at the same time, the super elastic material is in the outer strands, which have the dominant affect on performance parameters, thus enhancing the benefits of the material. Another benefit associated with the invention compared to prior art devices is that the multiple stranded cable configuration, in addition to providing a highly flexible and resilient structure, eliminates the necessity of a safety wire, since the failure of a single strand will not cause a severing of the cable. Also, the construction prevents stretching of the cable in the event of failure of a single strand, which is a significant benefit compared to constructions which have a coil around a central safety wire.

In a second presently preferred embodiment, the invention includes a multi stranded cable constructed of multiple twisted strands of a suitable material such as a shape memory alloy or super elastic alloy of nickel-titanium, with one or more of the twisted strands consisting of a radiopaque material. The radiopaque strand may be one or more of the peripheral twisted strands and may also include one or more central strands of the cable. In a preferred aspect of the embodiment, the cable consists of six peripheral twisted strands and a central linear core strand, one or more of which can be of radiopaque material.

In a third aspect of the invention, the cable can be of linear strands that are arranged in a bundle and fastened or bound at intervals, or continuously, in order to maintain contact among the strands as the cable is bent. One or more of the strands may be radiopaque. This construction is adaptable to guidewires and other structures that must be pushable and/or torqueable, but still remain highly flexible and include radiopacity. Variations on this embodiment can include an outer sheath which consists of a solid or helically wound cover to provide enhanced torqueability and pushability. More specifically, the outer sheath can vary in thickness, stiffness of material or spring of the sheath members to provide desired variations in bending or

stiffness of the cable. Such a construction is particularly adaptable to guidewires and the like, and can be varied in terms of the binding or outer layer to alter the torqueability of the cable, and the flexibility of the cable can be varied along its length by the number and sizes of the stranded members in the cable.

In a fourth aspect of the invention, one or more of the strands can be of a therapeutic material used to enhance treatment of the site after placement of the device. In one presently preferred embodiment of the invention, the cable includes twisted strands of wire around the periphery of the cable, at least one of which is radiopaque. The core of the cable contains a therapeutic agent such as human growth hormone, genetic material, antigens or the like that are intended to become active after placement. Such a construction can be adapted to a variety of interventional therapeutic treatments. In one aspect of this embodiment, one of the strands can have multiple functions, such as providing both a therapeutic effect and also contributing to the structural integrity of the cable. By using copper in such a micro-cable, for instance, the copper can enhance the use of a device made from the cable as an intra-uterine device, with the copper also contributing to the radiopacity and structural integrity of the micro-cable. In the event that such an effect is desired, the therapeutic strand can be placed on the exterior of the cable to enhance contact with the site to be treated.

In a fifth aspect of the invention, a three dimensional occlusive device is provided that is adapted to be inserted into a portion of a vasculature for occluding the portion of the vasculature for use in interventional therapy and vascular surgery, that comprises at least one multi-stranded micro-cable having a plurality of flexible strands of a resilient material, with at least one radiopaque strand to provide a radiopaque marker of the deployed configuration of a device made of the cable during vascular surgery. The occlusive device is configured to have a primary, collapsed coil configuration or shape, and an expanded, or secondary three dimensional coil configuration or shape, that can be generally helical, conical, or spherical shapes. The flexible strands in a multi-stranded micro-cable of the occlusive device can be helically wound, or can be configured as parallel, longitudinal strands. In a currently preferred embodiment, at least one of the strands comprises a super-elastic material.

In another currently preferred embodiment, a plurality of the strands comprises a super-elastic material. One presently preferred super-elastic material comprises a nickel titanium alloy, that can be heat treated such that the alloy is highly flexible at a temperature appropriate for introduction into the body via a catheter, and after placement, the device will seek its minimum energy shape as originally formed and thereby take on a shape designed to optimize the therapeutic purposes desired for the device.

In another aspect of the invention, at least one of the strands comprises a shape memory material. In another currently preferred embodiment, a plurality of the strands are comprised of a shape memory material. One presently preferred shape memory material comprises a shape memory polymer. In one configuration, the strands of the micro-cable are arranged as exterior strands surrounding at least one interior strand, or core, and at least one radiopaque strand is disposed in the micro-cable, either centrally, axially disposed in the bundle of strands, or in the exterior strands surrounding the central core. The micro-cable can include a plurality of radiopaque strands, such as platinum, gold, or tungsten.

In the fifth aspect of the invention, at least one of the strands in the core or exterior strands can comprise a therapeutic agent, such as a copper or copper alloy wire or any of a variety of therapeutically active metals, alloys or components, a fiber such as Dacron (polyester), polyglycolic acid, polylactic acid, fluoropolymers, nylon, polyaramid fiber (e.g.Kevlar®), or silk chosen for thrombogenicity. Since the micro-cable consists of stranded parts, one or more strands may be longer than others, or even intermittently terminated, to thereby extend beyond the diameter of the remaining strands and thereby increase the therapeutic effect of that strand. Alternatively, at least one of the strands can be coated with or impregnated with a therapeutic material, which can include, but is not limited to, any one or combination of human growth hormone, genetic material, antigens, hydrogels, collagen, bio-absorbable polymers such as lactic acids/glycolic acids, caprolactam or microcellular foam. In addition, the therapeutic element can comprise a means to conduct energy, such as an optical fiber to conduct light energy.

In the fifth aspect of the invention, the strands of the micro-cable can also

be bundled by at least one outer cover or sheath to constrain the strands of the micro-cable about a longitudinal axis to produce a composite banded cable. The outer sheath can comprise a containment strand wound about the strands and made of a low friction material, such as a fluoropolymer, for example, or a heat shrinkable plastic tube. In one feature of the fifth aspect of the invention, a plurality of heat shrink plastic covers are placed over the strands of the micro-cable to provide bending stiffness in the cable. The strands of the micro-cable can be banded at intervals by a plurality of bands. In another variation, a plurality of micro-cables that are arranged as parallel, longitudinal micro-cables or a helically wound micro-cables to form a composite cable can have an exterior wrapped cover that can be wound at greater or lesser intervals along the outside to provide variations in the torqueability and stiffness of the composite cable. Also, the thickness and width of the wrapping cover, as well as its material composition along the composite cable can vary in cross section along the length of the composite cable to provide bending stiffness of said cable which varies with the position on said cable. Also, the number of strands and the degree to which they extend along the composite cable can be varied within the sheath, and the outer sheath itself can be multi-layered with different materials in order to provide a graduated bending and stiffness characteristic over the length of the cable. The occlusive device thus can be formed of a plurality of micro-cables in order to provide desired bending and strength characteristics, either as helically wound micro-cables, or parallel longitudinal micro-cables having a collapsed composite cable configuration and an expanded composite cable configuration with a secondary shape. In another feature of the fifth aspect of the invention, the composite cable can further comprise at least one longitudinal sensing element for sensing a parameter, such as an optical imaging element, i.e., where the sensing element can comprises an optical fiber. Alternatively, the sensing element can comprise a thermal imaging element, or an ultrasound imaging element, for example.

In a further aspect of the invention, the form about which the three dimensional shape is wound is formed from metal, ceramic or other heat resistant material and has formed within it the path desired for the micro-cable corresponding to the shape. For example, the form can be of a spherical configuration, with the

surface containing channels into which the cable is laid prior to heat treating. The channels can be arranged so that the resultant shape is kink resistant and relatively easy to withdraw without kinking. The form can also contain passages through which the cable can pass to advantageously form the shape.

After the cable is wound around the form, the form and cable can be heat treated to cause the cable material to adopt the shape of the form as a low energy shape. The cable can then be removed from the form and put into a catheter-introducer prior to use in intravascular therapy.

In another presently preferred embodiment, the invention comprises a device for use in interventional therapy and vascular surgery, adapted to be inserted into a portion of a vasculature, comprising a shape memory coil having an outer coil portion and an inner core portion, the shape memory coil having a collapsed primary coil configuration and an expanded secondary configuration with a three dimensional shape; and a radiopaque strand extending through the core of the shape memory coil to provide a radiopaque marker of the deployed configuration of the device. In one presently preferred embodiment, the shape memory coil comprises a multi-stranded coil having a plurality of flexible strands of a resilient material, and in an alternate preferred embodiment, the shape memory coil comprises a single stranded coil, such as of a nickel titanium alloy, or a shape memory polymer, for example. The radiopaque strand enhances the radiopacity of a multi-stranded coil, as well as a single stranded coil of pure nickel titanium alloy, which will advantageously not fray upon stretching, and is stretch resistant. With such an inner radiopaque strand, the coil can also be made of other materials, such as a shape memory polymer such as polyurethane, for example.

In a presently preferred embodiment, the radiopaque strand comprises a core strand having a plurality of intermittently spaced apart enlarged radiopaque portions that can comprise a radiopaque material selected from the group consisting of platinum and gold, for example. The core strand can comprise a material selected from the group consisting of platinum, gold, a shape memory polymer having a glass transition temperature (T_g) below 25° C, a hydrogel, an amorphous gel, and a fiber. In one presently preferred aspect, the enlarged radiopaque portions can comprise a

plurality of beads of radiopaque material spaced apart and mounted on a core strand of material, and the beads may comprise a radiopaque material selected from the group consisting of platinum, gold and tungsten. In another presently preferred aspect, one or more of the plurality of beads can optionally be bonded to a segment of the shape memory coil, such as an end bead bonded to an end segment of the shape memory coil, for example.

In another presently preferred aspect, the enlarged radiopaque portions may comprise a plurality of coils intermittently wound about and spaced apart on the core strand, and the core strand can comprise a radiopaque material selected from the group consisting of platinum and gold. The spaced apart coils can comprise a radiopaque material selected from the group consisting of platinum and gold.

In another presently preferred embodiment, a polyhedral occlusive device is provided, adapted to be inserted into a portion of a vasculature for occluding a portion of the vasculature, for use in interventional therapy and vascular surgery. The occlusive device can be formed with multiple coils centrally connected together at their inner ends to a central coil body and radiating outward from the central coil body. When inserted within a vessel at a treatment site, such as within an aneurysm, the radiating coil arms of the occlusive device extend to fill the vessel in three dimensions, allowing the occlusive device to accommodate the shape of the vessel.

In another presently preferred embodiment, the device for use in interventional therapy and vascular surgery includes a micro-cable or coil formed of one or more flexible strands of a resilient material, having a collapsed primary coil configuration and an expanded secondary configuration with a three dimensional shape; and one or more therapeutic fibers woven into the coil to enhance treatment of the site after placement of the device. The coil can also be formed to include one or more radiopaque strands to provide a radiopaque marker of the deployed configuration of the device. The one or more therapeutic fibers can be woven about adjacent or non-adjacent loops of the coil, or can be woven through multiple strands of adjacent loops of the coil. The one or more therapeutic fibers are made of a material that will provide a timed release of a therapeutic agent intended to become active after placement of the device, such as human growth hormone, collagen, a modified polymer with growth

factor, genetic material for gene therapy, antigens, or the like. A plurality of therapeutic fibers can be provided so that the different fibers in the coil can provide different therapeutic agents to provide a range of therapies.

These and other aspects and advantages of the invention will become apparent from the following detailed description and the accompanying drawings, which illustrate by way of example the features of the invention.

BRIEF DESCRIPTION OF THE DRAWINGS

Figure 1 is a perspective of a radiopaque microstrand cable constructed according to the invention.

Figure 2 is a cross-section at 2-2 of Figure 1.

Figure 3 is a helical vasoocclusive coil formed of the cable of the invention.

Figure 4 is a spherical vasoocclusive structure formed using the cable of the invention.

Figure 5 is a stacked coil vasoocclusive device formed using the cable of the invention.

Figure 6 is a cross section of a vascular member with an aneurysm illustrating the approach of a vasoocclusive coil towards the aneurysm.

Figure 7 is an illustration of a vasoocclusive coil which has been introduced into an aneurysm preparatory to being deployed within the aneurysm.

Figure 8 is an illustration of a spherical vasoocclusive coil formed with cable of the invention deployed within an aneurysm.

Figure 9 is an alternate in a preferred embodiment of the invention including a plurality of radiopaque strands within the cable.

Figure 10 is an alternate preferred embodiment incorporating a therapeutic member within the radiopaque cable of the invention.

Figure 11 is an alternate preferred embodiment of the present invention wherein strands of the cable are arranged within an exterior binding consisting of multiple straps about the cable.

Figure 12 is a perspective view of the embodiment of Figure 11.

Figure 13 is an alternative embodiment to the embodiment of Figure 12 wherein the external binding of the cable represents a sheath wound about the cable.

Figures 14a and 14b are perspectives of alternative embodiments of the embodiment of Figure 13.

Figure 15 is a cross-section of an alternative embodiment in which a plurality of multi-strand cables are included within an external sheath surrounding the cable.

Figure 16 is a perspective view of the embodiment of Figure 14.

Figure 17 is a plan view of a beaded radiopaque strand according to another preferred embodiment of the invention.

Figure 18 is a sectional view of the beaded radiopaque strand of Figure 17 inserted in a shape memory coil.

Figure 19 is a plan view of an alternate preferred embodiment of a radiopaque strand with intermittent spaced apart coils.

Figure 20 is a plan view of an alternate preferred embodiment of the radiopaque strand having spaced apart enlarged radiopaque portions.

Figure 21 is a schematic diagram of a preferred three dimensional radiating coil configuration of a primary wind polyhedral occlusion device according to the principles of the invention.

Figure 22 is a schematic diagram of an alternate preferred embodiment of a primary wind polyhedral occlusive device according to the principles of the invention.

Figure 23 is a perspective view of a mandrel for forming the polyhedral occlusive device of Figure 22.

Figure 24 is a schematic diagram of an alternate preferred embodiment of a secondary wind polyhedral occlusive device according to the principles of the invention.

Figure 25 is a perspective view of another preferred alternate embodiment of a helical vasoocclusive coil according to the principles of the invention, with a therapeutic fiber woven around adjacent loops of the coil.

Figure 26 is a perspective view of another preferred alternate embodiment of a helical vasoocclusive coil according to the principles of the invention, with a plurality of therapeutic fibers woven around adjacent loops of the coil.

Figure 27 is a perspective view of another preferred alternate embodiment of a helical multi-stranded vasoocclusive coil according to the principles of the invention, with a therapeutic fiber woven through strands of adjacent loops of a multi-stranded coil.

Figure 28 is a perspective view of another preferred alternate embodiment of a helical multi-stranded vasoocclusive coil according to the principles of the invention, with a plurality of therapeutic fibers woven through strands of adjacent loops of a multi-stranded coil.

DETAILED DESCRIPTION OF THE PREFERRED EMBODIMENTS

While nickel-titanium alloys are useful in forming super-elastic or shape memory interventional devices, micro-coils formed of very small diameter wires of nickel-titanium alloy material for treatment of areas of the small diameter vasculature such as an artery or vein in the brain, for treatment of aneurysms and the like, for example, can have relatively low yield strengths and are somewhat subject to kinking, even if made of super-elastic alloy. This can create problems if the coil is to be withdrawn after being emplaced by the doctor, as for instance, if the device is too small to effectively fill the cavity to be treated. Furthermore, even solid wires of a size suitable for use in interventional devices are not very radiopaque.

As is illustrated in the drawings, which are provided for the purposes of illustration and not by way of limitation, the invention is embodied in a multi-stranded micro-cable formed of a plurality of flexible strands of a resilient material with the cable including at least one radiopaque strand. In a presently preferred embodiment of the invention illustrated in Fig. 1, the multi-stranded micro-cable 10 is approximately from .0015 to .009 inches in diameter, and comprises a plurality of flexible strands 12 of nickel-titanium alloy, with at least one centrally, axially

disposed radiopaque wire 14 which is approximately from .0005 to .003 inches in diameter. While the above stated diameters represent those presently known to be compatible with the invention, larger or smaller diameters may be useful for particular applications. The central radiopaque wire 14 can be formed of platinum or gold, for example, or other similar suitable radiopaque metals, in order to provide a radiopaque marker of the deployed configuration of a device made of the cable during vascular surgery.

There are numerous benefits to the novel construction of the invention for use in interventional devices and the like. By using the stranded or micro-cable construction of the invention, a device made from the micro-cable becomes virtually kink resistant compared to the single strand wires now commonly used in micro-coils. The multi-strand cable construction of the invention allows the micro-wires of the cable to slip across each other and reinforce each other rather than break or take a set. Also, by incorporating a stranded radiopaque material such as platinum, tungsten or gold into the cable construction, the device is radiopaque in sizes much smaller than with other constructions. The micro-cable construction of the invention can be used to produce soft, kink resistant, radiopaque stents, guidewires, guidewire distal tips, and micro-coils.

Figure 2 is a cross-section of the micro-cable of Fig. 1 at 2-2 illustrating one presently preferred arrangement of the strands within the cable. In this embodiment, the exterior strands 12 are formed of a resilient material chosen to provide the characteristics desired for a specific application in interventional therapies. In a presently preferred embodiment, this material is a nickel titanium super-elastic alloy which is heat treated such that the alloy is highly flexible at a temperature appropriate for introduction into the body via a catheter. By choosing such a material for micro-coils and the like, the devices formed from the micro-cable can be relatively easily placed into the appropriate body cavity and after placement, the device will take on a shape designed to optimize the therapeutic purposes desired for the device. As illustrated in Fig. 2, such a cable can have a central core 14 of a radiopaque material such as gold or platinum, thus dramatically enhancing the radiopacity of the cable. Even a solid super-elastic wire of the same diameter as the cable would have

substantially less radiopacity than the cable of the invention with the central gold or platinum wire and the construction of the invention provides numerous other highly desirable characteristics. Among these characteristics is the relative flexibility and resistance to kinking of the cable compared to an equivalent single wire and substantially greater accommodation of the cable to bending, etc., with resultant lessening of trauma to the surrounding tissue and ease of placement in a small body cavity.

One advantageous application of the invention is to vasoocclusive devices formed of the micro-cable for insertion into aneurysms and other vascular defects for the purpose of occluding flow to the aneurysm. Fig. 3 illustrates a helically wound coil 16 of micro-cable 10 which is formed to fit within a micro-catheter for insertion into an area upon which a therapeutic procedure is to be performed. While a helical coil is illustrated, it will be appreciated that numerous other secondary shapes can be formed from the cable of the invention, as will be described further below. More specifically, as illustrated in Fig. 4, a three dimensional, essentially spherical, device 18 can be formed of the cable 10, (or even of a coil of the cable, if appropriate) at a temperature sufficient to heat treat the material and thereby create a memory of the desired shape. The device is then inserted into a catheter from which it may be deployed into an aneurysm or the like. The teachings of U.S. Patent Number 5,645,558 describe the construction of such a device out of flexible wire and are incorporated by referenced herein. Fig. 5 illustrates a collapsed coil configuration 20 for a vasoocclusive device which also can be formed from the cable of the invention and is used for the purposes of insertion into aneurysms and other defects that have relatively large entry necks compared to their internal volume.

Fig. 6 is an illustration of a catheter 22 using a coil 16 as a vasoocclusive device made of the present invention and used for insertion into an aneurysm 24 projecting laterally from a blood vessel 26. The coil 16 is contained within the outer housing 28 of a micro-catheter that is used to house the coil prior to deployment. The end of the catheter housing 28 is introduced into the opening 30 of the aneurism 24 by use of a guide wire (note shown). Thereafter, the vasoocclusive coil 16, and a pusher 32 are introduced into the catheter to provide for insertion of the vasoocclusive

device into the aneurysm. In a presently preferred embodiment, the coil 16 formed of the cable of the invention is retained to an optical fiber pusher 32 which is attached to the coil by a collar of shape memory plastic material 34 as described in co-pending application Serial No. 08/986,004 the disclosure of which are incorporated herein by reference. As shown in Fig. 7, the coil is introduced into the aneurysm and is then pushed from the micro-catheter until it fills the cavity.

Those skilled in the art will recognize that it is sometimes the case that the vasoocclusive device must be withdrawn after it is fully or partly inserted into the aneurysm. In such a case, there is a danger that the coil will be stretched beyond its elastic range or kink, or otherwise deform and make withdrawal difficult. Those skilled in the art will also recognize that it is sometimes advantageous to form vasoocclusive devices of secondary shapes which are based upon a basic configuration of a coil or the like. The present invention includes such applications within the scope of the invention. However, when vasoocclusive devices made of even super-elastic material are used, it is sometimes the case that the devices will be stretched or kinked when withdrawal is attempted. The cable of the present invention substantially reduces the probability that kinking or stretching beyond yield will occur in a given instance, while at the same time providing radiopacity not available with other constructions. Thus, the present invention represents an important forward step in the technology of interventional therapy.

In one presently preferred embodiment, the shape memory collar 34 is heated to a temperature which allows it to be shrunk onto coil 16. The collar is attached to optical fiber pusher 32 by an adhesive 36 which retains high strength at temperatures beyond the shape memory material transition point. After insertion, and when the operator is satisfied that the device is properly deployed, light energy from a source of coherent light is introduced into the proximal end of the optical fiber (not shown) and propagated in the distal end 38 of the fiber to cause the shape memory material collar 34 to return to its previous shape and release coil 16. Those skilled in the art will recognize that the invention can also be used with a variety of other placement catheter systems, and it is not intended that the invention be limited to the placement concepts illustrated by way of example.

Those skilled in the art will recognize that a number of shaped devices may be introduced into an area to be treated depending upon its geometry and the number of devices to be inserted. Fig. 8 illustrates an essentially spherical device 18 which has been deployed into such an aneurysm but it will commonly be found that a device such as that shown would then be supplemented by a further coiled device inserted within the space inside the spherical device to completely occlude flow from the artery to the aneurysm.

While one presently preferred implementation of the micro-cable of the invention has been illustrated, those skilled in the art will appreciate that other variations of the invention may have advantages for certain purposes. Fig. 9 is an example of one such construction 40 in which radiopacity is more desirable than in other forms and for that reason a number of radiopaque strands 42, in this illustration four in number, are formed into the cable along with three resilient material strands 44. It will also be appreciated that a larger or smaller number of strands may be incorporated into a given cable and the cables may be formed of multiple cables in order to provide desired bending and strength characteristics. It will also be appreciated by those skilled in the art that the invention is adaptable to the use of a variety of materials which by themselves would not have been easily adaptable to micro devices for interventional therapies. For instance, materials such as copper are useful for intrauterine devices and the like, but copper wire, even when heavily alloyed, has certain limitations for use in such devices. By use of the present invention, composite cables incorporating one or more strands of a desired material can be configured with other strands providing strength, flexibility, shape memory, super-elasticity, radiopacity or the like for previously unavailable characteristics in micro devices.

The invention is also adaptable to numerous other purposes. Fig. 10 illustrates a cross-section of a further preferred embodiment in which radiopaque strands 42 and resilient strands 44 form a portion of the cable and a therapeutic agent 48 is contained in one of the strands. Such a therapeutic agent can include human growth hormone, hydrogels, or a variety of other agents which will serve to provide desired therapeutic capabilities when placed within a specific area of the body being

treated by use of the micro-catheter. Depending upon the application of the therapeutic agent, its method of action and the delay, if any, in the time after placement in which the therapeutic action is desired, the agent strand may be placed in any of a variety of positions with the cable, from core wire outward. Also, it may be desirable to coat one or more strands with a therapeutic material for certain purposes. Such constructions are contemplated within the scope of the invention.

It is also contemplated within the scope of the invention that one or more of the strands of the micro-cable is longer than the others, and perhaps intermittently terminated, to thereby produce a micro-cable in which the therapeutic strands extend to a greater diameter than the other strands to thus increase the therapeutic effect of the therapeutic stand. Such a construction is particularly advantageous if increased thrombogenicity is desired, while maintaining structural continuity and radiopacity for the micro-cable.

Fig. 11 illustrates a cross-section of an additional presently preferred embodiment of the invention in which the strands 12, 14 of the micro-cable 10 are bundled and banded at intervals by bands 50 to produce a composite banded cable 52 in order to provide increased flexibility without unraveling or dislocation of the strands in the cable. Fig. 12 is a perspective view of the banded cable 50 of this embodiment. While the illustrated configuration shows the strands being laid parallel within the cable, it is also possible in this construction to include both twisted cables as the primary cables 10 within the outer bands 50 to form the composite cable 52. This configuration can use one or more longitudinal strands 14 which are radiopaque, thus providing a continuous indication of radiopacity within the cable. As a further alternative embodiment, it is possible for the longitudinal cable 52 to be formed of a single inner cable 10 with bands 50.

Fig. 13 illustrates a further embodiment of the invention in which longitudinal strands of cables are contained within a wound cover 56 for the purposes of providing a composite guide wire or the like 58 having improved torqueability. Such a construction has particular advantages for guidewire designs having improved radiopacity in very small diameters. It will be appreciated that in this configuration, as well as the other longitudinally arranged multi-stranded cables, the number of

strands and the degree to which they extend along the cable within the sheath is a variable which can be used to provide increased stiffness, pushability and torqueability in some sections with greater flexibility in others. Additionally, composite cables according to the invention can incorporate additional elements normally not available in solid guide wires, such as optical, thermal or ultrasound imaging elements, therapeutic agent delivery catheters, and can take advantage of materials which are not readily adaptable to prior art catheter or guide wire designs incorporating a primary wire structured element. Figures 14a and 14b illustrate a further variable available because of the invention; the exterior wrapped cover 56 can be wound at greater or lesser intervals 60 along the outside to provide variations in the torqueability and stiffness of the composite cable. Also, the thickness and width of the wrapping cover 56, as well as its material composition along the composite guide wire 58, can offer further capabilities for customizing the design for various applications. These advantages can be combined with the benefits of shape memory or super-elastic alloys to create guidewires and other devices with heretofore unavailable capabilities.

Fig. 15 illustrates a cross-section of a micro-cable according to the invention which has at least one overall exterior sheath to contain the micro-cable. The micro-cable may be made of one or more multiple strand elements which may further include twisted or longitudinal strands within their construction. The sheath may also be used to control the torqueability characteristics of the cable and as discussed in co-pending application, Serial No. 08/986,004, the sheath may be multi-layered with different materials in order to provide a graduated bending and stiffness characteristic over the length of the cable.

Referring to Figs. 17 to 20, in another presently preferred embodiment, a nickel titanium alloy coil, such as the multi-stranded micro-cable described above, can be made radiopaque by the insertion of a radiopaque strand having spaced apart enlarged radiopaque portions into the core of a primary and/or secondary wind. The radiopaque material preferably has a desired degree of stiffness so as not to compromise the desired degree of softness of the coil. The material may comprise a beaded core of platinum, gold, shape memory polymer having a glass transition

temperature (T_g) below 25° C, polymer, hydrogel, and the like, or a flexible strand, rod, amorphous gel, fiber, and the like. The radiopaque strand can be used to enhance the radiopacity of the multi-stranded coil, as indicated above, as well as a pure nickel titanium alloy coil, which will advantageously not fray upon stretching, and is stretch resistant. With such an inner radiopaque strand, the coil can also be made of other materials, such as a polyurethane shape memory polymer, for example.

In a presently preferred embodiment illustrated in Figs. 17 and 18, the radiopaque strand 70 may comprise a plurality of beads 72 of radiopaque material, such as platinum, gold or tungsten, spaced apart and mounted, such as by soldering, welding, or adhesive bonding such as by cyanoacrylate adhesive, on a core strand 74 of material that can be platinum, gold or tungsten, or a shape memory polymer having a glass transition temperature (T_g) below 25° C. The beaded radiopaque strand can form the central core of a multi-stranded micro-cable, and as is shown in Fig. 18, the beaded radiopaque strand 70 may form a core of a pure nickel titanium alloy coil 76 wound around the beaded radiopaque strand, and having a proximal stem 77 bonded to the coil by soldering, welding, adhesive or the like, that can also be formed as a radiopaque marker, of such materials as platinum, gold or tungsten, for example. In a preferred aspect, one or more beads, such as an end bead 78, may optionally be bonded to a segment 80 of the coil, such as by cyanoacrylate adhesive 81, for example.

In another presently preferred embodiment illustrated in Fig. 19, the radiopaque strand can comprise a radiopaque wire 82, such as platinum or gold, for example, intermittently wound with a plurality of spaced apart coils 84 of radiopaque material, such as platinum or gold, for example, to form an inner radiopaque core for a multi-stranded micro-cable, or in an alternate preferred embodiment, the intermittently wound radiopaque strand may form a core of a pure nickel titanium alloy coil wound around the intermittently wound radiopaque strand.

Referring to Fig. 20, in another presently preferred embodiment, the radiopaque strand can comprise a radiopaque wire 86, such as platinum or gold, for example, with intermittently spaced apart enlarged radiopaque portions 88, to form an inner radiopaque core for a multi-stranded micro-cable, or for a pure nickel

titanium alloy coil wound around the radiopaque strand.

It will be appreciated that a three dimensional occlusive device adapted to be inserted into a portion of a vasculature for occluding the portion of the vasculature for use in interventional therapy and vascular surgery, can be formed as described above, from at least one multi-stranded micro-cable having a plurality of flexible strands of a resilient material, with at least one radiopaque strand to provide a radiopaque marker for the device during vascular surgery. The occlusive device is configured to have a primary coil shape, as illustrated in Fig. 5, and an expanded secondary three dimensional coil configuration or shape, that can be generally helical, conical, or spherical shapes, such as the spherical shapes illustrated in Figs. 4 and 8. A mandrel suitable for making such three dimensionally shaped occlusive devices can be formed of a refractory material, such as alumina or zirconia, for example. The mandrel typically has the general three dimensional shape that the occlusive device will be given, and can have a generally helical, conical, or spherical shape, or can have a unique shape designed to provide such a form to the occlusive device to fit a particular vascular structure to be treated. The mandrel forms a support for the winding and heat treatment of the micro-cable, plurality of microcables, or composite micro-cable occlusive device as described above, and ideally will not contaminate the occlusive device during heat treatment of the device. The surface of the mandrel preferably has a plurality of circumferential grooves for aligning the occlusive device as it is wound on the mandrel. The surface of the mandrel may also have one or more apertures for receiving one or more ends of the micro-cable, plurality of microcables, or composite micro-cable, to assist winding into the desired form.

The wound occlusive device is then heat treated at a suitable temperature and a sufficient period of time to impart the form to the shape memory material included in the device. While heat treatment at a temperature of about 1100° F for approximately 4 hours or more is typically sufficient to impart the form to the occlusive device when the shape memory material is a nickel titanium super-elastic alloy, but when the occlusive device includes fibers or a therapeutic agent that can be affected by heat, the temperature utilized can be substantially lowered, and the duration of heat treatment adjusted accordingly, as will be appreciated by those skilled

in the art. Alternatively, if the therapeutic agent is not amenable to elevated temperatures, it may be added after formation of the three dimensional shape. After the heat treatment, the occlusive device is removed from the mandrel, and cold worked into the desired collapsed primary configuration for placement into a catheter or cannula for use. It will be appreciated that those techniques can also be used for a variety of cables produced according to the invention, including those which use shape memory materials other than nickel-titanium alloys. When the occlusive device reaches its destination in the vasculature during vascular therapy, it assumes the secondary relaxed and expanded three dimensional shape imparted from the heat treatment on the mandrel.

In another presently preferred embodiment, a three dimensional, polyhedral occlusive device is provided, adapted to be inserted into a portion of a vasculature for occluding a portion of the vasculature, for use in interventional therapy and vascular surgery. The occlusive device can be formed as described above, from at least one multi-stranded micro-cable having a plurality of flexible strands of a resilient material, with at least one radiopaque strand to provide a radiopaque marker for the device during vascular surgery, with multiple coils, preferably four or more coils, centrally connected together at their inner ends, and in a presently preferred aspect, connected at their inner ends to a central coil body and radiating outward from the central coil body. When inserted with a vessel at a treatment site, such as within an aneurysm, the radiating coil arms of the occlusive device extend to fill the vessel in three dimensions, allowing the occlusive device to accommodate the shape of the vessel. In a preferred aspect, the radiating coils of the occlusive device can thus form a tetrahedral, pentahedral, hexahedral, or other polyhedral shape, symmetrical or unsymmetrical, and are preferably formed from conically shaped coil arms that have an expanding diameter as they radiate outward from the central coil body, with the radiating coil arms having soft larger diameter outer ends. The central coil body may be spherical or rounded, or may be correspondingly cubical, tetrahedral, pentahedral, or otherwise appropriately polyhedral. A typical aneurysm may have a diameter of approximately 10 mm., and the coil arms will also typically have an outer diameter of approximately 10 mm.

As is illustrated in Figure 21, one presently preferred three dimensional radiating coil configuration 90 is a primary wind coil having a hexahedral configuration with six conically shaped coil arms 92 radiating from a central coil junction 94 in the three x, y and z axes of a three dimensional pattern of coordinates. Such a three dimensional radiating coil configuration can be formed by individually winding the radiating arms of the hexahedral configuration on conically shaped mandrel, and bonding the inner apical ends 96 of the coils together by welding, solder, adhesive such as cyanoacrylate, or the like. A central coil body 98 such as the spherical coil described above is also preferably similarly bonded to the inner ends of the coil arms.

Referring to Figure 22, in another presently preferred embodiment, a three dimensional radiating hexahedral coil configuration 100 for the occlusive device is also a primary wind coil with six conically shaped coils or coil arms 102 radiating from a central coil ball or sphere 104 in the three x, y and z axes forming a three dimensional pattern of coordinates. The central ball may also alternatively have the shape of a cube, for example. The outer diameter of the coil arms typically can be approximately 10 mm., and the diameter of the central coil ball or sphere typically can be 3 mm. in diameter. The hexahedral coil can be formed by winding the central spherical coil about a mandrel as described above and then joining the six radiating conical coil arms at their inner apical ends 106 to the central spherical coil 108, as described above, such as by welding, solder, adhesive such as cyanoacrylate, or the like. Alternatively, the hexahedral coil configuration can be formed as a continuous primary wind of the coil by winding the central spherical coil, and forming the radiating arms by a double winding of the radiating conical coil arms, first up from the center and then back down, with each of the radiating conical coil arms being wound in turn about the central spherical at the appropriate location.

Referring to Figure 23, such a hexahedral configuration with six conically shaped coils radiating from a common central coil ball or sphere can be formed by winding the coils about a mandrel 110 formed of a refractory material, such as alumina or zirconia, for example, and having inverted conical coil arms 112 radiating from a central body 114, such as a spherical, rounded, cubical, tetrahedral,

pentahedral, or otherwise polyhedral central body, for example. The mandrel forms a support for the winding and heat treatment of the three dimensional radiating hexahedral coil occlusive device as described above, and ideally will not contaminate the occlusive device during heat treatment of the device. The surface of the central body of the mandrel preferably has a plurality of circumferential grooves 116 for aligning the occlusive device as it is wound on the mandrel. The surface of the mandrel may also have one or more apertures 118 for receiving one or more ends of the micro-cable, plurality of microcables, or composite micro-cable forming the hexahedral occlusive device, to assist winding into the desired form.

In another configuration illustrated in Figure 24, a another presently preferred alternate three dimensional radiating coil configuration 120 is a secondary wind coil of a primary wind coil, such as a helical wind, for example, the secondary wind coil having a hexahedral configuration with six conically shaped coil arms 122 radiating from the common central coil 124, which is illustrated as having a cubical shape, in the three x, y and z axes of a three dimensional pattern of coordinates. The outer diameter of the coil arms typically can be approximately 10 mm., and the diameter of the central coil ball or sphere typically can be 3 mm. in diameter. The hexahedral secondary wind configuration can be formed by winding the primary helical wind coil about an appropriate mandrel, and then joining the six radiating conical coil arms at their inner apical ends 126 to the common central coil 128, as described above, such as by welding, solder, adhesive such as cyanoacrylate, or the like. Alternatively, the hexahedral coil configuration can be formed as a continuous primary wind of the coil by winding the central coil body, and forming the radiating arms by a double winding of the radiating conical coil arms, first up from the center and then back down, with each of the radiating conical coil arms being wound in turn about the central spherical at the appropriate location.

As is described above, the tetrahedral, pentahedral, hexahedral or other polyhedral wound occlusive device radiating from the common central coil is then preferably heat treated upon the mandrel at a suitable temperature and for a sufficient period of time to impart the relaxed form to the shape memory material forming the device. The occlusive device can then be cold worked into a shape suitable for

delivery through a catheter to a desired treatment site, and when the occlusive device reaches its destination in the vasculature during vascular therapy, it assumes the relaxed and expanded three dimensional shape imparted from the heat treatment on the mandrel.

In another presently preferred embodiment illustrated in Figures 25 and 26, a helical microcoil 130 that can be formed of one or more flexible strands of nickel-titanium alloy, has one or more therapeutic fibers 136 advantageously woven about adjacent loops of the coil, used to enhance treatment of the site after placement of the device. The helical microcoil can also be formed to include one or more axially disposed radiopaque wires, as described above. Alternatively, the one or more therapeutic fibers can be woven about non-adjacent loops of the coil as well. The therapeutic fibers are preferably made of a material that will provide a timed release of a therapeutic agent, such as human growth hormone, collagen, a modified polymer with growth factor, genetic material for gene therapy, antigens or the like, that are intended to become active after placement. When multiple fibers are provided, as is shown in Figure 26, different fibers can be provided in the same coil with different therapeutic agents to provide different therapies. The fibers are preferably woven into the coil by hand after the heat setting of the coil shape.

In another presently preferred embodiment illustrated in Figures 27 and 28, a helical microcoil 140 formed of a plurality of flexible strands 142 of nickel-titanium alloy, with at least one centrally, axially disposed radiopaque wire 144 as described above, has one or more therapeutic fibers 136 as described above, advantageously woven through the multiple strands of adjacent loops of the coil, to enhance treatment of the site after placement of the device. Alternatively, the one or more therapeutic fibers can be woven through the strands of non-adjacent loops of the coil as well. When multiple fibers are provided, as is shown in Figure 28, the different fibers can be provided in the same coil with different therapeutic agents to provide different therapies. The one or more fibers are preferably woven through the strands of the multiply-stranded microcoil by hand during winding of the multiply-stranded microcoil.

It will be apparent from the foregoing that while particular forms of the

invention have been illustrated and described, various modifications can be made without departing from the spirit and scope of the invention. Accordingly, it is not intended that the invention be limited, except as by the appended claims.

WHAT IS CLAIMED IS:

1. A multi-stranded micro-cable for use in interventional therapy and vascular surgery, comprising:

a plurality of flexible strands of a resilient material; said micro-cable including at least one radiopaque strand to provide a radiopaque marker.

2. The multi-stranded micro-cable of Claim 1, wherein at least one radiopaque strand comprises an axially disposed radiopaque wire.

3. The multi-stranded micro-cable of Claim 1 wherein at least one of said plurality of flexible strands of a resilient material are comprised of a super-elastic material.

4. The multi-stranded micro-cable of Claim 3 wherein at least one of said super-elastic material comprises a nickel titanium alloy.

5. The multi-stranded micro-cable of Claim 1 wherein at least one of said plurality of flexible strands of a resilient material are comprised of a shape memory material.

6. The multi-stranded micro-cable of Claim 5 wherein said shape memory material comprises a nickel-titanium alloy.

7. The multi-stranded micro-cable of Claim 5 wherein said shape memory material comprises a shape memory polymer.

8. The multi-stranded micro-cable of Claim 1 wherein said plurality of flexible strands further comprise a central core wire, said plurality of flexible strands are twisted about said central core wire, and at least one of said twisted strands comprising a radiopaque strand.

9. The multi-stranded micro-cable of Claim 1 wherein said plurality of flexible strands further comprises a plurality of flexible strands twisted about a central core wire, said central core wire being made of a radiopaque material.

10. The multi-stranded micro-cable of Claim 1 wherein said radiopaque strand comprises a material selected from the group consisting of platinum, gold, and tungsten.

11. The multi-stranded micro-cable of Claim 5 wherein said radiopaque strands comprise a plurality of strands of said micro-cable, at least one of said plurality of radiopaque strands arrayed in the outer twisted strands of said cable.

12. The multi-stranded micro-cable of Claim 1, further comprising at least one strand of a therapeutic material.

13. The multi-stranded micro-cable of Claim 12 wherein said strand of therapeutic material is selected from the group consisting of hydrogel and human growth hormone.

14. The multi-stranded micro-cable of Claim 1, further comprising a sheath to constrain said strands of said micro-cable about a longitudinal axis.

15. The multi-stranded micro-cable of Claim 14 wherein said sheath comprises a containment strand wound about said longitudinal strands.

16. The multi-stranded micro-cable of Claim 14 further comprising an outer flexible sheath of low friction material.

17. The multi-stranded micro-cable of Claim 16 wherein said outer sheath comprises a fluoropolymer.

18. The multi-stranded micro-cable of Claim 14 wherein said sheath comprises a heat shrinkable plastic tube.

19. A multi-stranded micro-cable for use in interventional therapy and vascular surgery comprising:

a plurality of flexible strands made of a resilient material helically wound around a central core, said central core comprising an axially placed therapeutic substance.

20. The multi-stranded micro-cable of Claim 19 wherein said therapeutic substance includes one or more of components from the group of hydro-gel, collagen, bio-absorbable polymers such as lactic acids/glycolic acids and capro lactam.

21. The multi-stranded micro-cable of Claim 19 wherein said cable further comprises at least one of said strands of resilient material being a radiopaque strand to provide a radiopaque marker during a therapeutic procedure.

22. The multi-stranded micro-cable of Claim 19 wherein at least one of said flexible strands of the wire made of resilient material further comprises a shaped memory or super-elastic material.

23. The multi-stranded micro-cable of Claim 19 wherein said shaped memory or super-elastic material further comprises a nickel titanium alloy.

24. The multi-stranded micro-cable of Claim 19 wherein said therapeutic material further comprises material to promote human cell growth.

25. The multi-stranded micro-cable of Claim 19 wherein said therapeutic substance core is a fiber such as Dacron (polyester), polyglycolic acid, polylactic acid, fluoropolymers, nylons, polyaramid fiber kevlar or silk chosen for thrombogenicity.

26. The multi-stranded micro-cable of Claim 19 further comprising replacing at least one strand in said outer wound strands with a strand of a therapeutic material.

27. The multi-stranded micro-cable of Claim 14 wherein said sheath further comprises a plurality of heat shrink plastic covers placed to provide bending stiffness in said cable which varies with the position on said cable.

28. The multi-stranded micro-cable of Claim 14 wherein said sheath further comprises a sheath which varies in cross section along its length to provide bending stiffness of said cable which varies with the position on said cable.

29. The multi-stranded micro-cable of Claim 14 further comprising at least one longitudinal element for sensing a parameter.

30. The multi-stranded micro-cable of Claim 14 further comprising at least one longitudinal element for providing a therapeutic effect at a location near the distal end of said cable.

31. The multi-stranded micro-cable of Claim 29 wherein said sensing element comprises an optical fiber.

32. The multi-stranded micro-cable of Claim 30 wherein said therapeutic element comprises means to conduct energy.

33. The multi-stranded micro-cable of Claim 32 wherein said means to conduct energy comprises an optical fiber to conduct light energy.

34. A device for use in interventional therapy and vascular surgery, adapted to be inserted into a portion of a vasculature, comprising:

at least one multi-stranded micro-cable having a collapsed primary coil

configuration and an expanded secondary configuration with a three dimensional shape, each said multi-stranded micro-cable having a plurality of flexible strands of a resilient material and at least one radiopaque strand to provide a radiopaque marker of the deployed configuration of the device.

35. The device of Claim 34, wherein said secondary three dimensional shape is selected from the group consisting of generally spherical, generally helical, and generally conical shapes.

36. The device of Claim 34, wherein said plurality of strands are helically wound.

37. The device of Claim 34, wherein said plurality of flexible strands are parallel longitudinal strands.

38. The device of Claim 34, wherein at least one of said plurality of strands comprises a super-elastic material.

39. The device of Claim 38, wherein said super-elastic material comprises a nickel titanium alloy.

40. The device of Claim 34, wherein at least one of said strands comprises a shape memory material.

41. The device of Claim 34, wherein said shape memory material comprises a nickel-titanium alloy.

42. The device of Claim 41, wherein said shape memory nickel-titanium alloy is heat treated such that the alloy is highly flexible at a temperature appropriate for introduction into the body via a catheter, and after placement, the device will take on a shape designed to optimize the therapeutic purposes desired for the device.

43. The device of Claim 34, wherein at least one of the strands comprises a therapeutic agent.

44. The device of Claim 43 wherein said strand comprising a therapeutic agent is wound into said micro-cable so that at least a portion of said strand projects beyond the diameter of the other strands in said cable.

45. The device of Claim 43, wherein said therapeutic agent comprises a fiber selected from the group consisting of Dacron (polyester), polyglycolic acid, polylactic acid, fluoropolymers, nylons, polyaramid fiber, kevlar, silk chosen for thrombogenicity, human growth hormone, genetic material, antigens, hydrogel, collagen, and bio-absorbable polymers including lactic acids, glycolic acids, caprolactam and microcellular foams.

46. The device of Claim 43, wherein said therapeutic agent comprises means to conduct energy.

47. The device of Claim 46, wherein said means to conduct energy comprises an optical fiber to conduct light energy.

48. The device of Claim 43, wherein said therapeutic agent is disposed axially in a central core

49. The device of Claim 34, wherein said plurality of strands comprises a plurality of exterior strands surrounding at least one interior strand.

50. The device of Claim 34, wherein said plurality of strands comprises a plurality of exterior strands surrounding a central core.

51. The device of Claim 34, wherein said radiopaque strand comprises at least one centrally, axially disposed radiopaque wire.

52. The device of Claim 34, wherein said radiopaque wire comprises a radiopaque material selected from the group consisting of platinum, tungsten, and gold.

53. The device of Claim 34, wherein said micro-cable comprises a plurality of radiopaque strands.

54. The device of Claim 34, wherein said strands of the micro-cable are bundled by at least one outer cover to produce a composite banded cable.

55. The device of Claim 54, wherein said outer cover comprises a sheath to constrain said strands of said micro-cable about a longitudinal axis.

56. The device of Claim 54, wherein said outer cover comprises an outer sheath of material to provide bending stiffness and constrain said longitudinal strands about said longitudinal axis.

57. The device of Claim 55, wherein said sheath comprises a containment strand wound about said longitudinal strands.

58. The device of Claim 55, wherein said sheath is made of low friction material.

59. The device of Claim 55, wherein said sheath is made of a fluoropolymer.

60. The device of Claim 55, wherein said sheath comprises a heat shrinkable plastic tube.

61. The device of Claim 55, wherein said sheath comprises a plurality of heat shrink plastic covers placed to provide bending stiffness in said cable which

varies with the position on said cable.

62. The device of Claim 54, wherein said strands of the micro-cable are bundled by a plurality of bands disposed at intervals along said micro-cable to produce a composite banded cable.

63. The device of Claim 61, wherein said strands are laid parallel within the composite banded cable.

64. The device of Claim 55, wherein said strands are twisted within the composite banded cable.

65. The device of Claim 56, wherein said outer cover is wound at varying intervals along the outside to provide variations in the torqueability and stiffness of the composite cable.

66. The device of Claim 56, wherein the width of the outer cover is varied along the composite cable.

67. The device of Claim 54, wherein said outer covering varies in cross section along its length to provide bending stiffness of said composite cable which varies along said composite cable.

68. The device of Claim 54, wherein the number of strands and the degree to which they extend along said composite cable within the outer covering varies along said composite cable.

69. The device of Claim 54, wherein said outer covering comprises a plurality of layers formed of different materials in order to provide a graduated bending and stiffness characteristic over the length of the cable.

70. The device of Claim 54, wherein said composite microcable comprises a plurality of micro-cables disposed within said outer cover in order to provide desired bending and strength characteristics.

71. The device of Claim 70, wherein said plurality of micro-cables are helically wound within said outer cover.

72. The device of Claim 70, wherein said plurality of micro-cables extend parallel and longitudinally within said outer cover.

73. The device of Claim 70, wherein said composite cable has a collapsed primary configuration and an expanded secondary configuration with a secondary shape.

74. The device of Claim 73, wherein said secondary shape is three dimensional.

75. The device of Claim 73, wherein said secondary shape is selected from the group consisting of spherical, helical, and conical shapes.

76. The device of Claim 70, wherein said plurality of micro-cables are bundled by at least one outer cover to produce said composite banded cable.

77. The device of Claim 76, wherein said plurality of micro-cables are banded at intervals by a plurality of bands.

78. The device of Claim 34, further comprising at least one longitudinal element for sensing a parameter.

79. The device of Claim 68, wherein said longitudinal element for sensing a parameter is selected from the group consisting of an optical imaging

element, an optical fiber, a thermal imaging element, and an ultrasound imaging element.

80. A three dimensional composite device having a collapsed coil configuration with a primary shape and an expanded coil configuration with a secondary three dimensional shape for use in interventional therapy and vascular surgery, the device adapted to be inserted into a portion of a vasculature for occluding the portion of the vasculature, comprising:

a plurality of multi-stranded micro-cables having a collapsed coil configuration with a primary shape and an expanded coil configuration with a secondary three dimensional shape, each said multi-stranded micro-cable having a plurality of flexible strands of a resilient material, and at least one said strand being a radiopaque strand to provide a radiopaque marker of the deployed configuration of a device made of the cable during vascular surgery.

81. The three dimensional composite device of Claim 80, said micro-cable further comprising at least one outer cover disposed over at least a portion of said plurality of multi-stranded micro-cables to produce a composite banded cable.

82. The three dimensional composite device of Claim 81, wherein said secondary three dimensional shape is selected from the group consisting of generally spherical, generally helical, and generally conical shapes.

83. The three dimensional composite device of Claim 81, wherein said plurality of strands are helically wound.

84. The three dimensional composite device of Claim 81, wherein said plurality of flexible strands are parallel longitudinal strands.

85. The three dimensional composite device of Claim 81, wherein at least one of said plurality of strands comprises a super-elastic material.

86. The three dimensional composite device of Claim 81, wherein a plurality of said flexible strands are comprised of a super-elastic material.

87. The three dimensional composite device of Claim 81, wherein said super-elastic material comprises a nickel titanium alloy.

88. The three dimensional composite device of Claim 81, wherein at least one of said strands comprises a shape memory material.

89. The three dimensional composite device of Claim 81, wherein a plurality of said flexible strands of a resilient material are comprised of a shape memory material.

90. The three dimensional composite device of Claim 89, wherein said shape memory material comprises a nickel-titanium alloy.

91. The three dimensional composite device of Claim 89, wherein said shape memory nickel-titanium alloy is heat treated such that the alloy is highly flexible at a temperature appropriate for introduction into the body via a catheter, and after placement, the device will take on a shape designed to optimize the therapeutic purposes desired for the device.

92. The three dimensional composite device of Claim 89, wherein said shape memory material comprises a shape memory polymer.

93. The three dimensional composite device of Claim 81, wherein at least one of the strands comprises a therapeutic agent selected from the group consisting of a fiber selected from the group consisting of Dacron (polyester), polyglycolic acid, polylactic acid, fluoropolymers, nylons, polyaramid fiber kevlar and silk chosen for thrombogenicity, human growth hormone, genetic material, antigens and hydrogels.

94. The three dimensional composite device of Claim 93, wherein at least a portion of said strand of therapeutic agent projects beyond the diameter of the remaining strands on said cable.

95. The three dimensional composite device of Claim 93, wherein said therapeutic agent comprises at least one component selected from the group consisting of hydrogel, collagen, and bio-absorbable polymers including lactic acids, glycolic acids and caprolactam.

96. The three dimensional composite device of Claim 81, wherein said outer cover comprises a sheath to constrain said strands of said micro-cable about a longitudinal axis.

97. The three dimensional composite device of Claim 81, wherein said outer cover comprises an outer sheath of material to provide bending stiffness and constrain said longitudinal strands about said longitudinal axis, said sheath being formed of a low friction material selected from the group consisting of a fluoropolymer and a heat shrinkable plastic tube.

98. The three dimensional composite device of Claim 96, wherein said sheath comprises a containment strand wound about said longitudinal strands.

99. The three dimensional composite device of Claim 96, wherein said sheath comprises a plurality of heat shrink plastic tubes placed to provide bending stiffness in said cable which varies with the position on said cable.

100. The three dimensional composite device of Claim 81, wherein said strands of the micro-cable are bundled by a plurality of bands disposed at intervals along said micro-cable to produce a composite banded cable.

101. The three dimensional composite device of Claim 100, wherein

said strands are laid parallel within the composite banded cable.

102. The three dimensional composite device of Claim 100, wherein said exterior wrapped cover is wound at varying intervals along the outside to provide variations in the torqueability and stiffness of the composite cable.

103. The three dimensional composite device of Claim 100, wherein the width of the outer cover is varied along the composite cable.

104. The three dimensional composite device of Claim 81, wherein said outer covering varies in cross section along its length to provide bending stiffness of said composite cable which varies along said composite cable.

105. The three dimensional composite device of Claim 81, wherein the number of strands and the degree to which they extend along said composite cable within the outer covering varies along said composite cable.

106. The three dimensional composite device of Claim 97, wherein outer covering comprises a plurality of layers formed of different materials in order to provide a graduated bending and stiffness characteristic over the length of the cable.

107. A device for use in interventional therapy and vascular surgery, adapted to be inserted into a portion of a vasculature, comprising:

a shape memory coil having an outer coil portion and an inner core portion, said shape memory coil having a collapsed primary coil configuration and an expanded secondary configuration with a three dimensional shape; and

a radiopaque strand extending through the core of the shape memory coil to provide a radiopaque marker of the deployed configuration of the device.

108. The device of Claim 107, wherein said shape memory coil comprises a multi-stranded coil having a plurality of flexible strands of a resilient

material.

109. The device of Claim 107, wherein said shape memory coil comprises a single stranded coil.

110. The device of Claim 109, wherein said single stranded coil comprises a nickel titanium alloy.

111. The device of Claim 109, wherein said single stranded coil comprises a shape memory polymer.

112. The device of Claim 107, wherein said radiopaque strand comprises a core strand having a plurality of intermittently spaced apart enlarged portions.

113. The device of Claim 112, wherein said enlarged portions comprise a radiopaque material selected from the group consisting of platinum and gold.

114. The device of Claim 112, wherein said enlarged portions comprise a plurality of beads of radiopaque material spaced apart and mounted on a core strand of material.

115. The device of Claim 114, wherein said beads comprise a radiopaque material selected from the group consisting of platinum, gold and tungsten.

116. The device of Claim 114, wherein at least one of said plurality of beads is bonded to a segment of the shape memory coil.

117. The device of Claim 114, wherein an end bead is bonded to a segment of the shape memory coil.

118. The device of Claim 112, wherein said enlarged portions comprise

a plurality of coils intermittently wound about and spaced apart on said core strand.

119. The device of Claim 118, wherein said core strand comprises a radiopaque material selected from the group consisting of platinum and gold.

120. The device of Claim 118, wherein said spaced apart coils comprise a radiopaque material selected from the group consisting of platinum and gold.

121. The device of Claim 112, wherein said core strand comprises a material selected from the group consisting of platinum, gold, a shape memory polymer having a glass transition temperature (T_g) below 25° C, a hydrogel, an amorphous gel, and a fiber.

122. An occlusive device for use in interventional therapy and vascular surgery, adapted to be inserted into a portion of a vasculature, said occlusive device comprising:

a plurality of coil arms formed of shape memory material having a collapsed primary coil configuration and a three dimensional, polyhedral expanded secondary configuration, said coil arms having inner and outer ends, said inner ends of said coil arms being connected together; and

a central coil body connected to said inner ends of said coil arms.

123. The occlusive device of Claim 122, wherein said plurality of coil arms further comprises at least four coil arms.

124. The occlusive device of Claim 122, wherein said plurality of coil arms comprise six radiating coil arms forming a hexahedral configuration.

125. The occlusive device of Claim 122, wherein said plurality of coil arms are formed from conically shaped coils each having an inner apical end, and said inner apical ends being connected to said central body, said conically shaped coils

having an expanding diameter as they radiate outward.

126. The occlusive device of Claim 123, wherein said central body comprises a central three dimensional coil connecting said inner ends of said at least four coil arms together.

127. The occlusive device of Claim 126, wherein said at least four coil arms comprise six radiating coil arms forming a hexahedral configuration.

128. The occlusive device of Claim 126, wherein said plurality of coil arms are formed from conically shaped coils each having an inner apical end, and said inner apical ends being connected to said central body, said conically shaped coils having an expanding diameter as they radiate outward.

129. The occlusive device of Claim 126, wherein said central three dimensional coil has a shape selected from the group consisting of spherical, rounded, and cubical shapes.

130. The occlusive device of Claim 126, wherein said central three dimensional coil is tetrahedral.

131. The occlusive device of Claim 130, wherein said at least four coil arms comprise four radiating coil arms forming a tetrahedral configuration.

132. The occlusive device of Claim 127, wherein said central three dimensional coil is pentahedral.

133. The occlusive device of Claim 132, wherein said at least four coil arms comprise five radiating coil arms forming a pentahedral configuration.

134. The occlusive device of Claim 123, wherein said at least four coil

arms comprise at least one multi-stranded micro-cable having a plurality of flexible strands of a resilient material, with at least one radiopaque strand to provide a radiopaque marker.

135. The occlusive device of Claim 123, wherein said at least four coil arms comprise at least one secondary wind coil of a primary helical wind coil.

136. The occlusive device of Claim 126, wherein said central three dimensional coil comprises a secondary wind coil of a primary helical wind coil.

137. A device for use in interventional therapy and vascular surgery, adapted to be inserted into a portion of a vasculature, comprising:

a coil having a collapsed primary coil configuration and an expanded secondary configuration with a three dimensional shape, said coil being formed from at least one flexible strand of a resilient material; and

at least one therapeutic fiber woven into the coil to enhance treatment of the site after placement of the device.

138. The device of Claim 137 wherein said at least one flexible strand comprises a plurality of flexible strands of a resilient material, and at least one radiopaque strand to provide a radiopaque marker of the deployed configuration of the device.

139. The device of Claim 137 wherein said at least one therapeutic fiber is woven about adjacent loops of the coil.

140. The device of Claim 137 wherein said at least one therapeutic fiber is woven about non-adjacent loops of the coil.

141. The device of Claim 138, wherein said at least one therapeutic fiber is woven through the multiple strands of adjacent loops of the coil.

142. The device of Claim 138, wherein said at least one therapeutic fiber is woven through the multiple strands of non-adjacent loops of the coil.

143. The device of Claim 137 wherein said at least one therapeutic fiber is made of a material that will provide a timed release of a therapeutic agent intended to become active after placement of the device.

144. The device of Claim 143, wherein said therapeutic agent selected from the group consisting of human growth hormone, collagen, a modified polymer with growth factor, genetic material for gene therapy, and antigens.

145. The device of Claim 143, wherein said at least one therapeutic fiber comprises a plurality of therapeutic fibers, with different fibers provided in the coil with different therapeutic agents to provide different therapies.

146. The device of Claim 137 wherein said coil secondary three dimensional configuration is helical.

147. The device of Claim 137 wherein said at least on flexible strand comprises a nickel-titanium alloy.

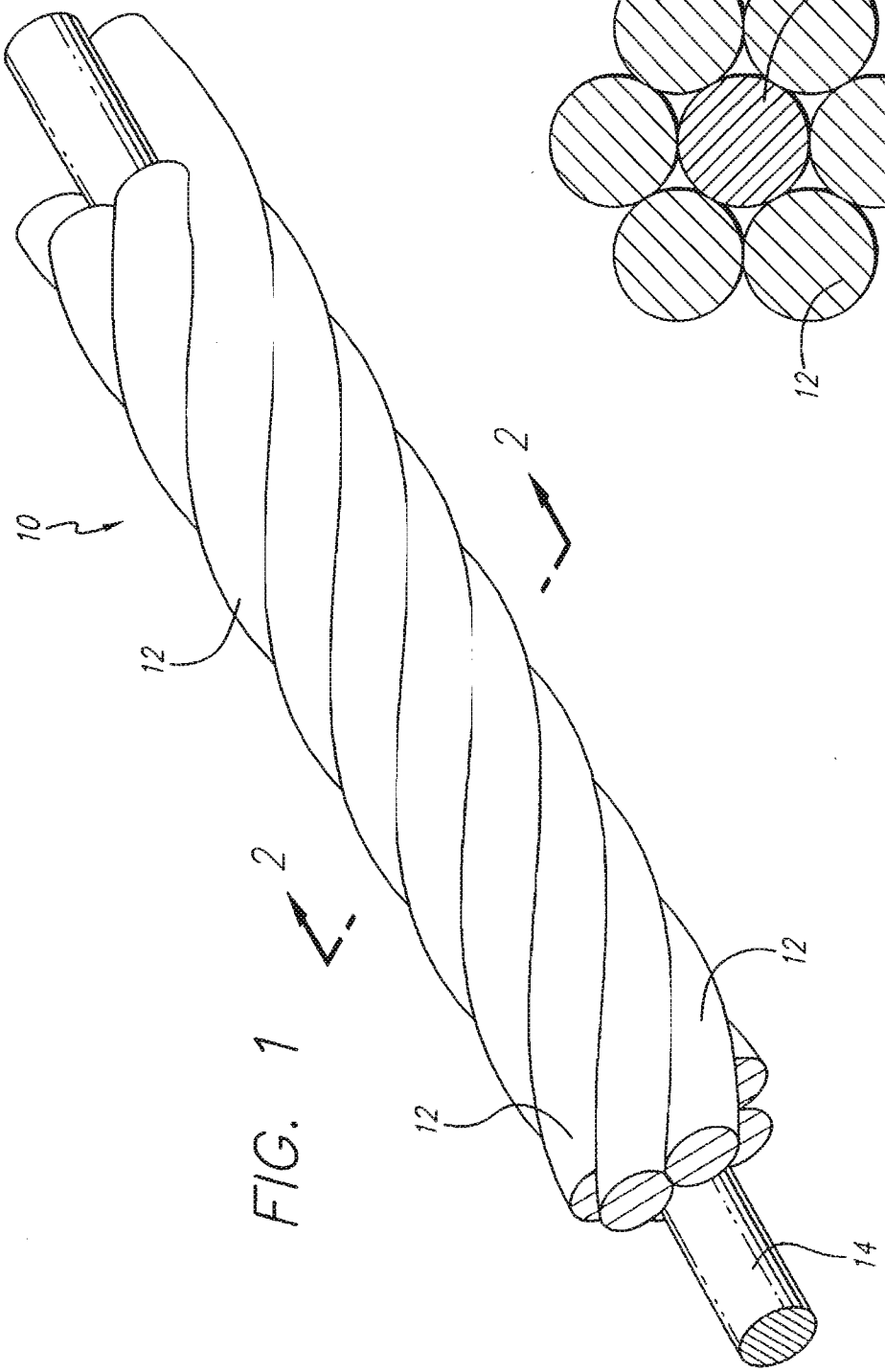

FIG. 1

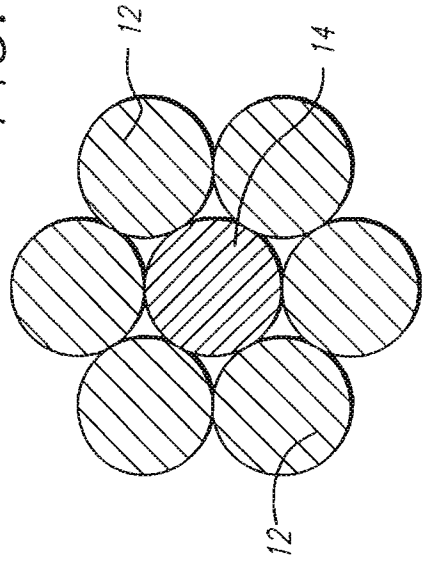

FIG. 2

Aortic Innovations, LLC, Exhibit 2126
Page 2126 - 120
IPR2023-01325, Edwards Lifesciences Corp. et al v. Aortic Innovations, LLC

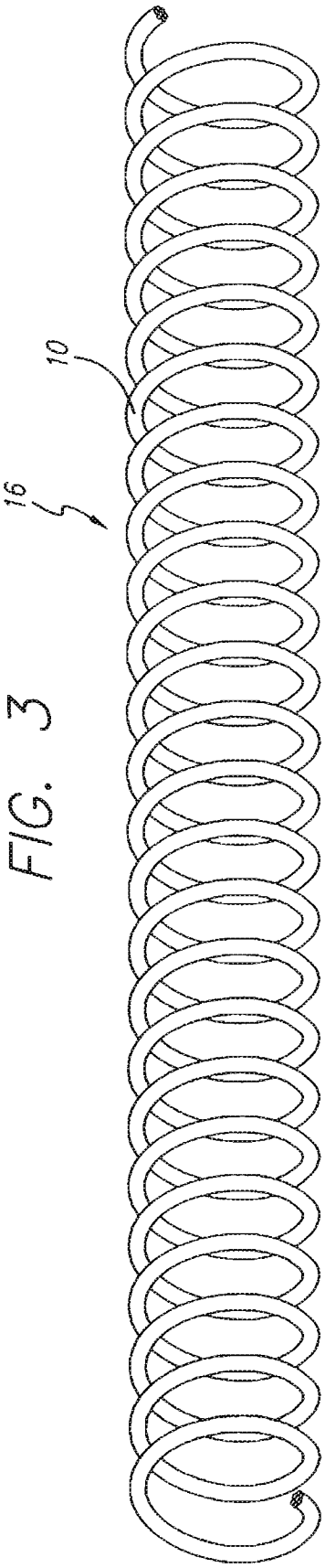

FIG. 3

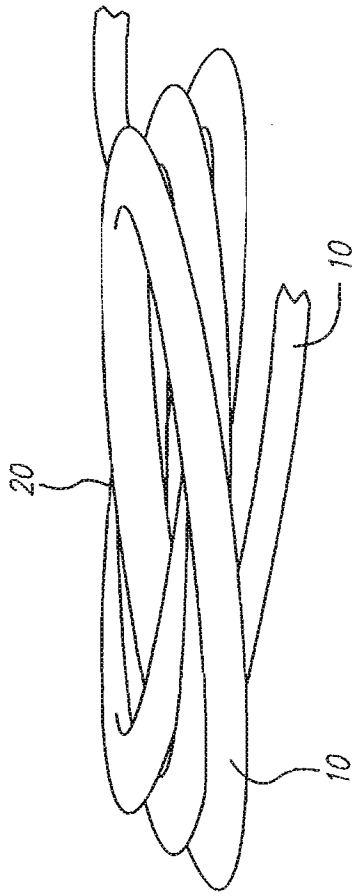

FIG. 5

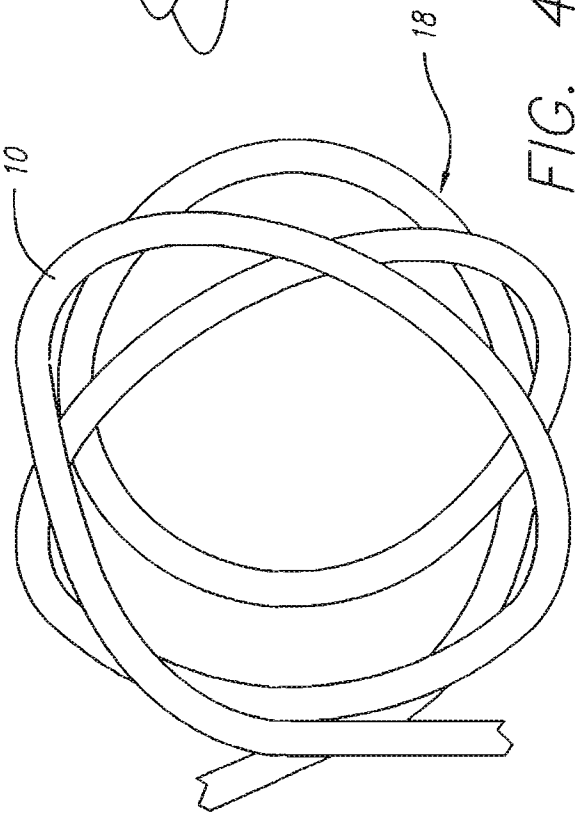

FIG. 4

Aortic Innovations, LLC, Exhibit 2126
Page 2126 - 121
IPR2023-01325, Edwards Lifesciences Corp. et al v. Aortic Innovations, LLC

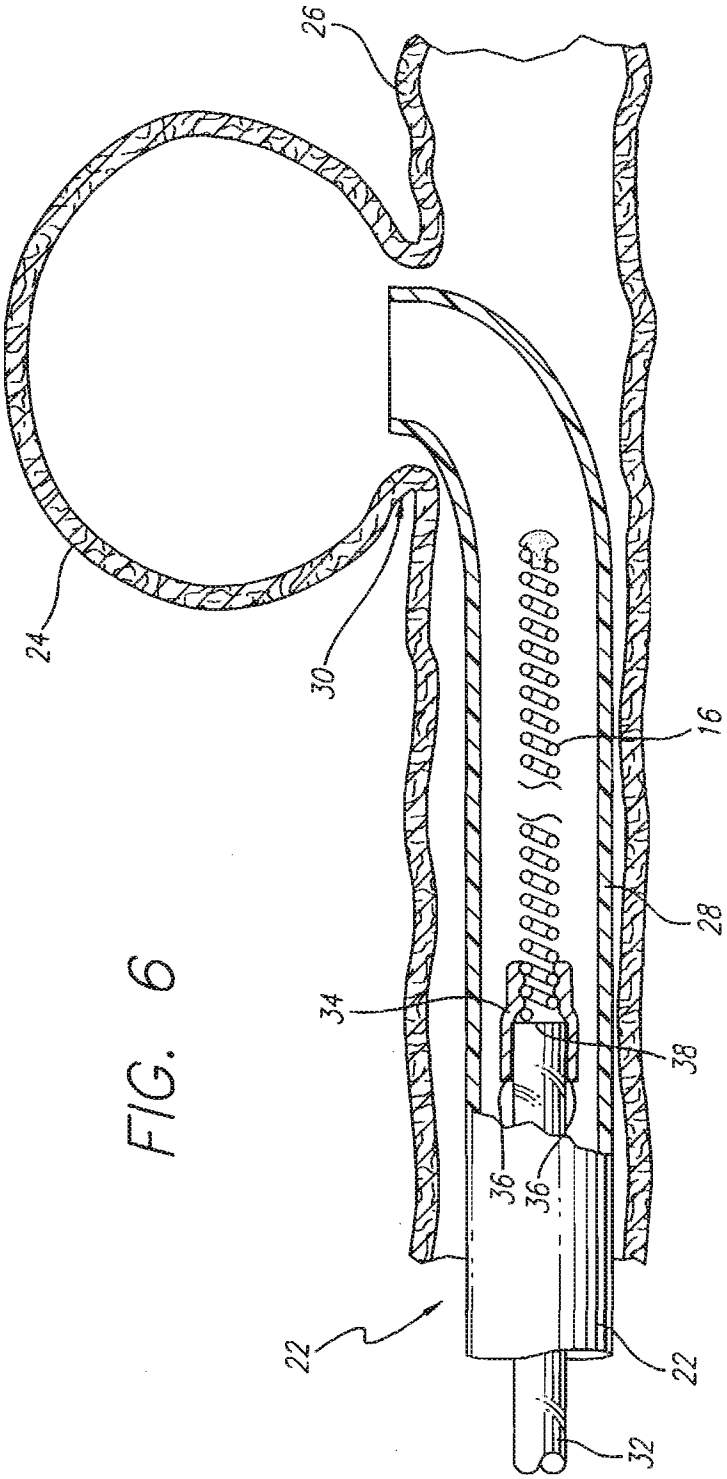

FIG. 6

Aortic Innovations, LLC, Exhibit 2126
Page 2126 - 122
IPR2023-01325, Edwards Lifesciences Corp. et al v. Aortic Innovations, LLC

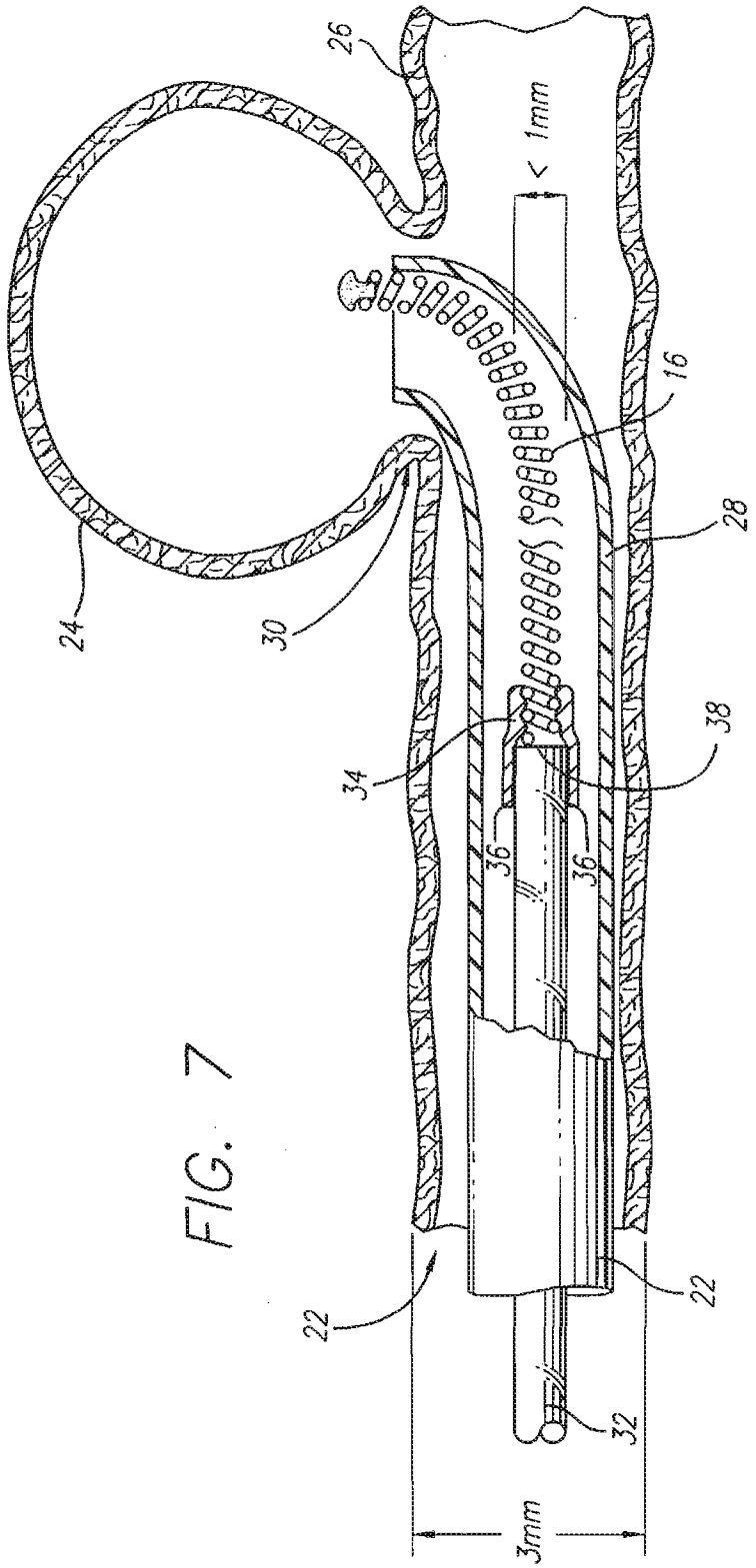

FIG. 7

Aortic Innovations, LLC, Exhibit 2126
Page 2126 - 123
IPR2023-01325, Edwards Lifesciences Corp. et al v. Aortic Innovations, LLC

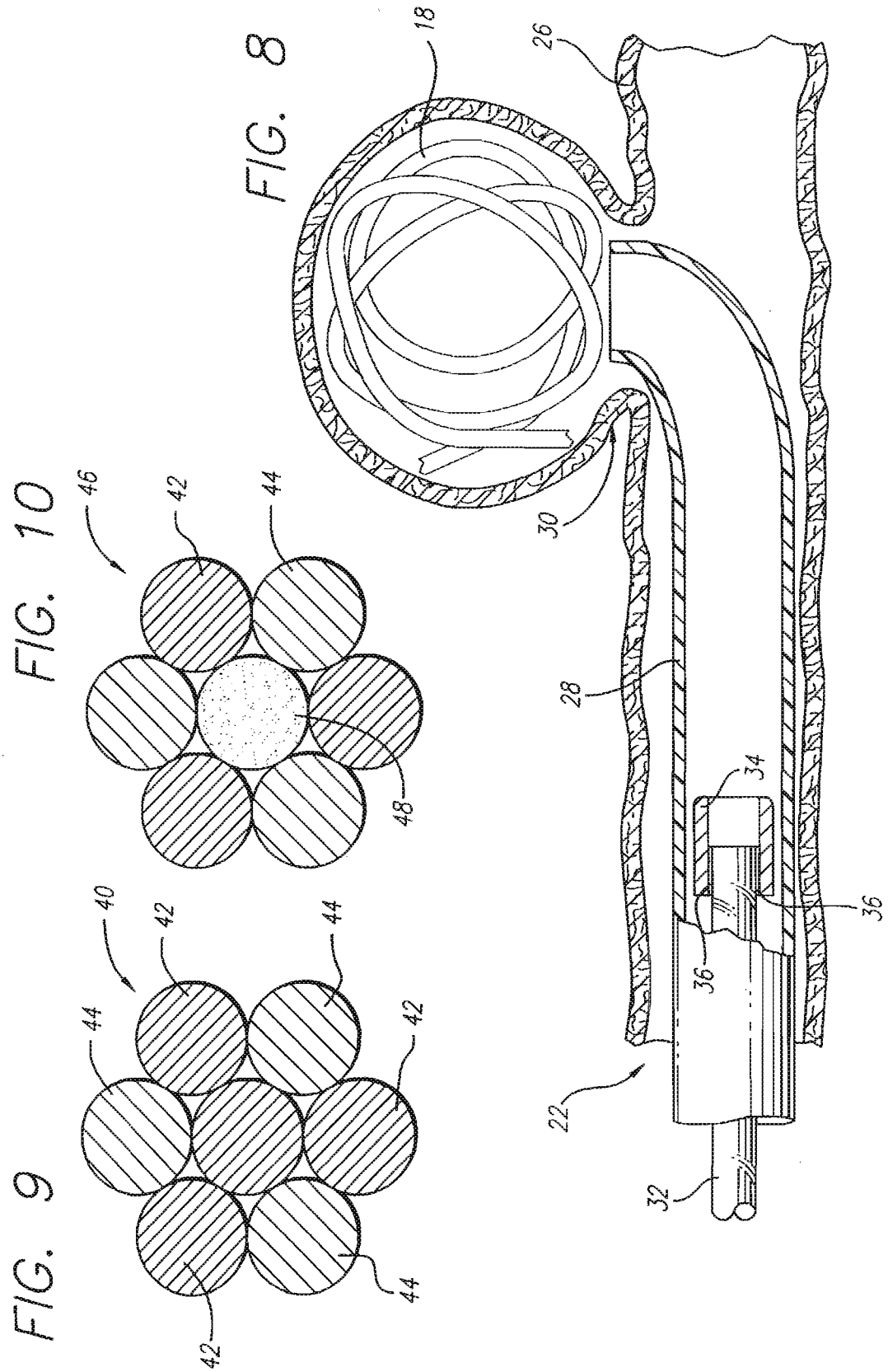

Aortic Innovations, LLC, Exhibit 2126
Page 2126 - 124
IPR2023-01325, Edwards Lifesciences Corp. et al v. Aortic Innovations, LLC

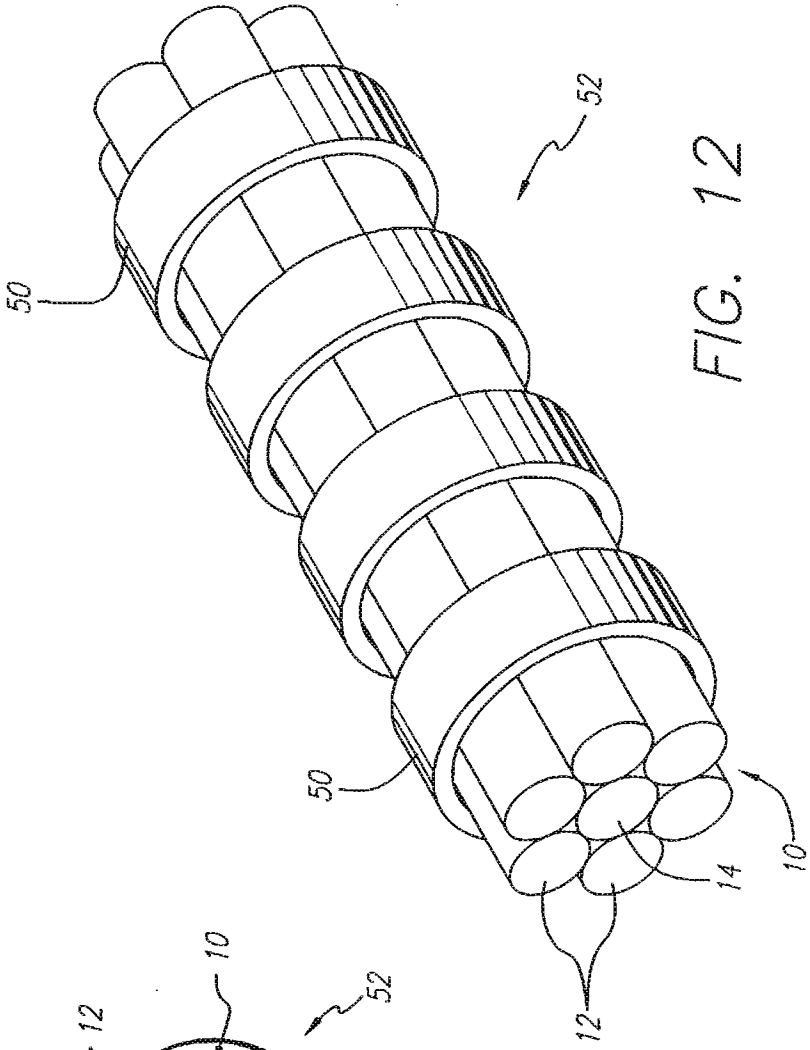

FIG. 12

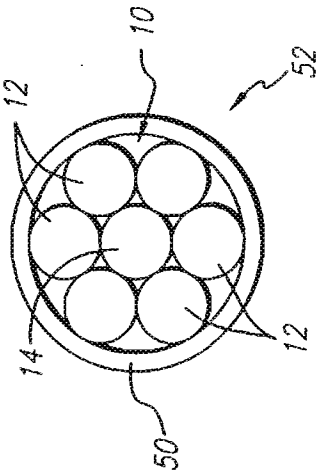

FIG. 11

Aortic Innovations, LLC, Exhibit 2126
Page 2126 - 125
IPR2023-01325, Edwards Lifesciences Corp. et al v. Aortic Innovations, LLC

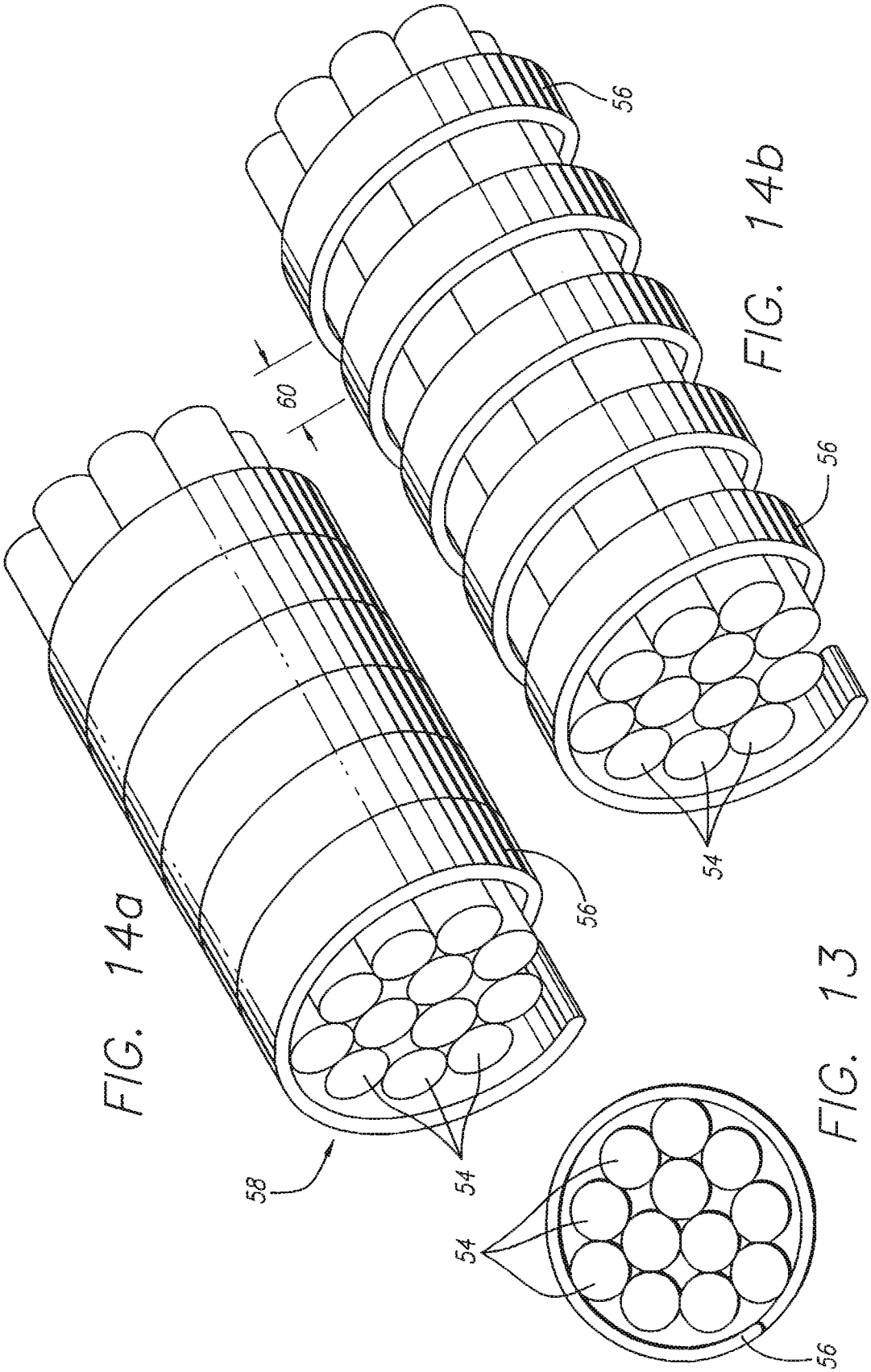

FIG. 14a

FIG. 14b

FIG. 13

Aortic Innovations, LLC, Exhibit 2126
Page 2126 - 126
IPR2023-01325, Edwards Lifesciences Corp. et al v. Aortic Innovations, LLC

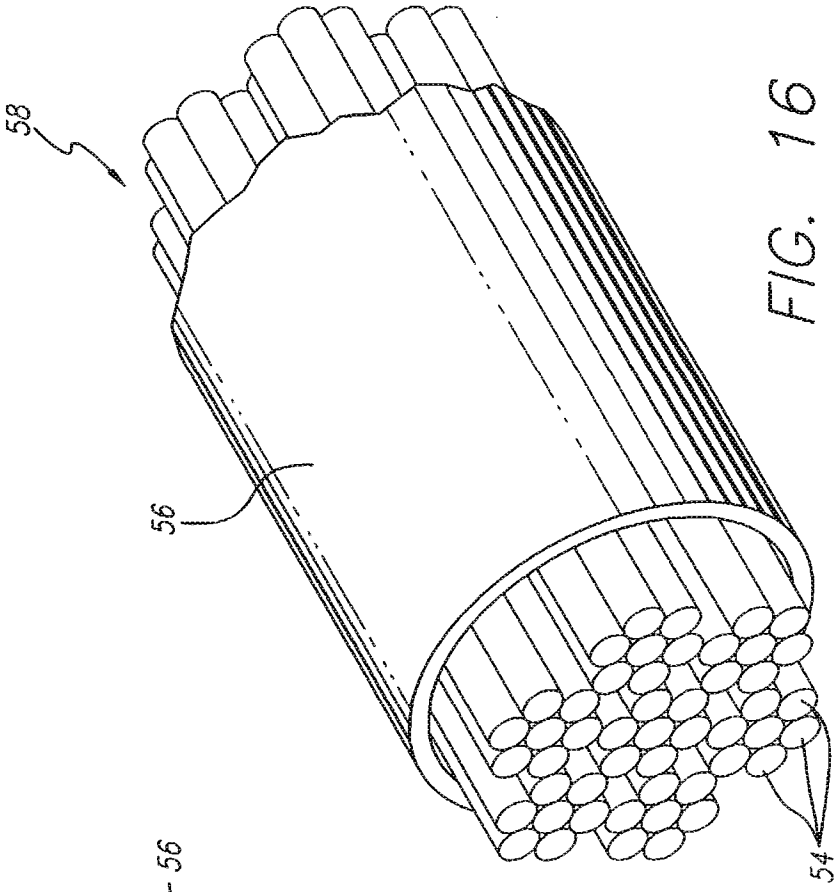

FIG. 16

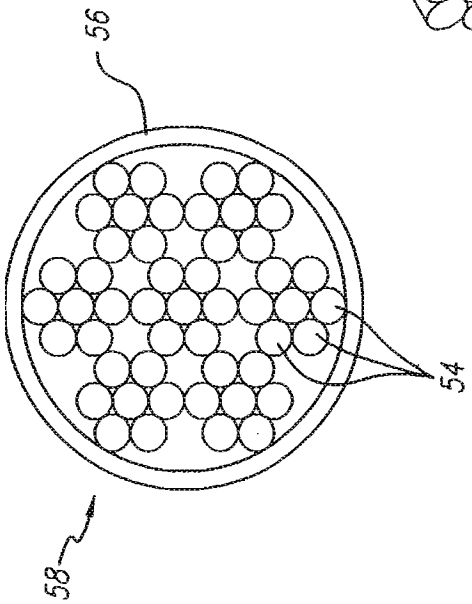

FIG. 15

Aortic Innovations, LLC, Exhibit 2126
Page 2126 - 127
IPR2023-01325, Edwards Lifesciences Corp. et al v. Aortic Innovations, LLC

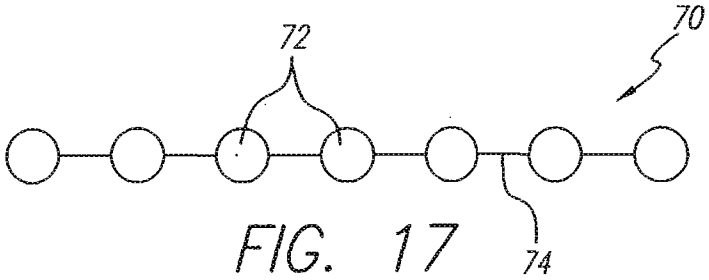

FIG. 17

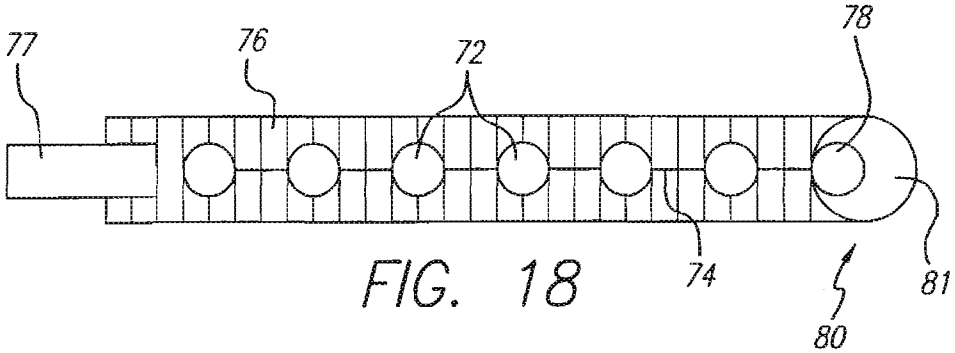

FIG. 18

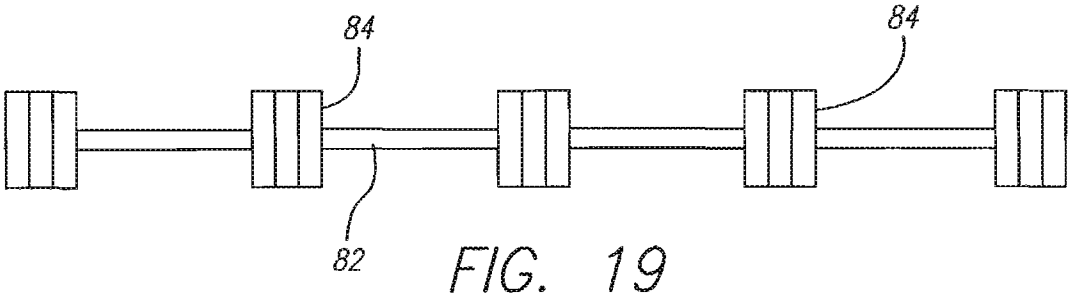

FIG. 19

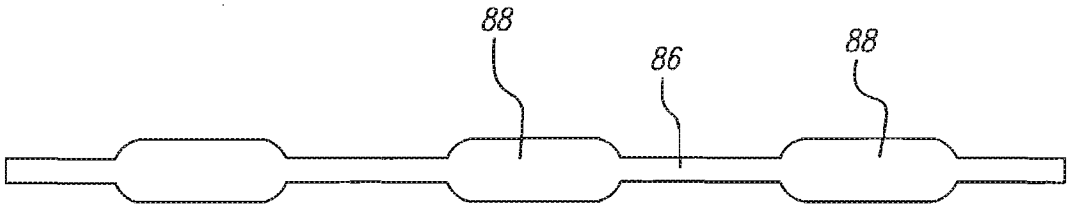

FIG. 20

Aortic Innovations, LLC, Exhibit 2126
Page 2126 - 128
IPR2023-01325, Edwards Lifesciences Corp. et al v. Aortic Innovations, LLC

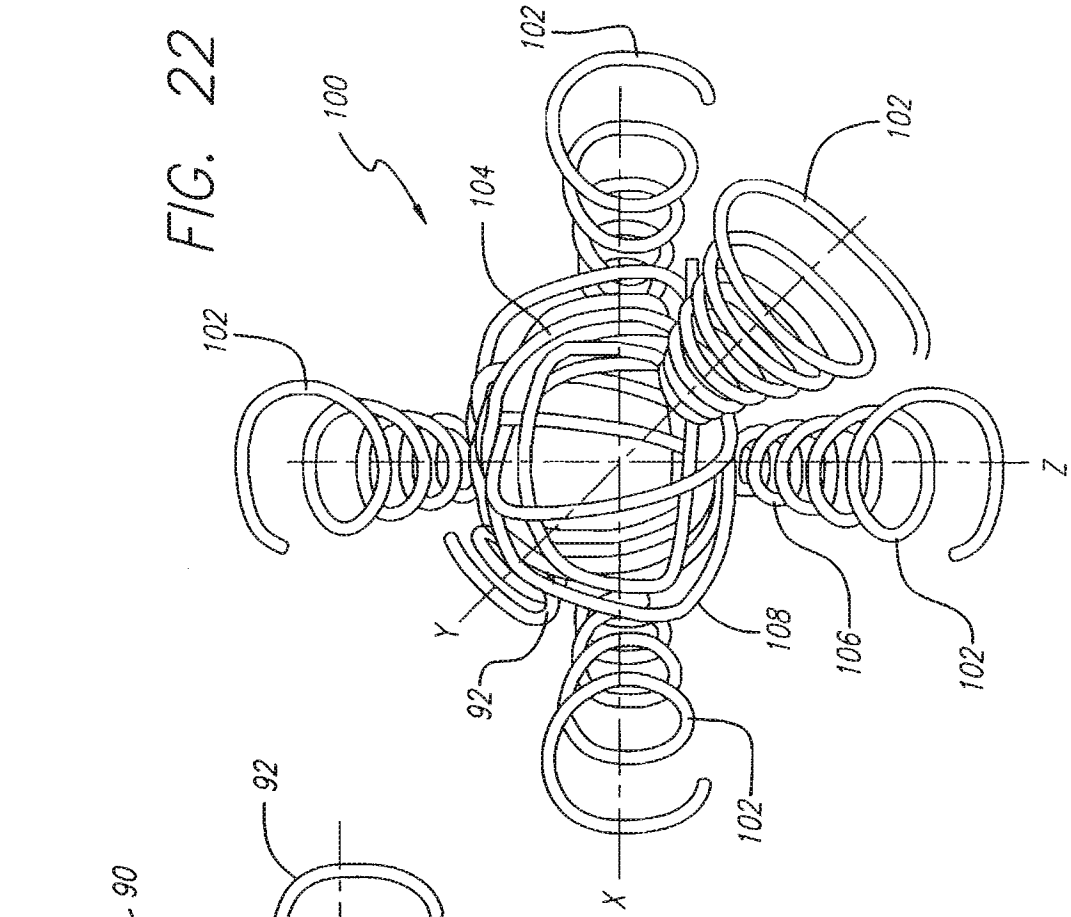

FIG. 22

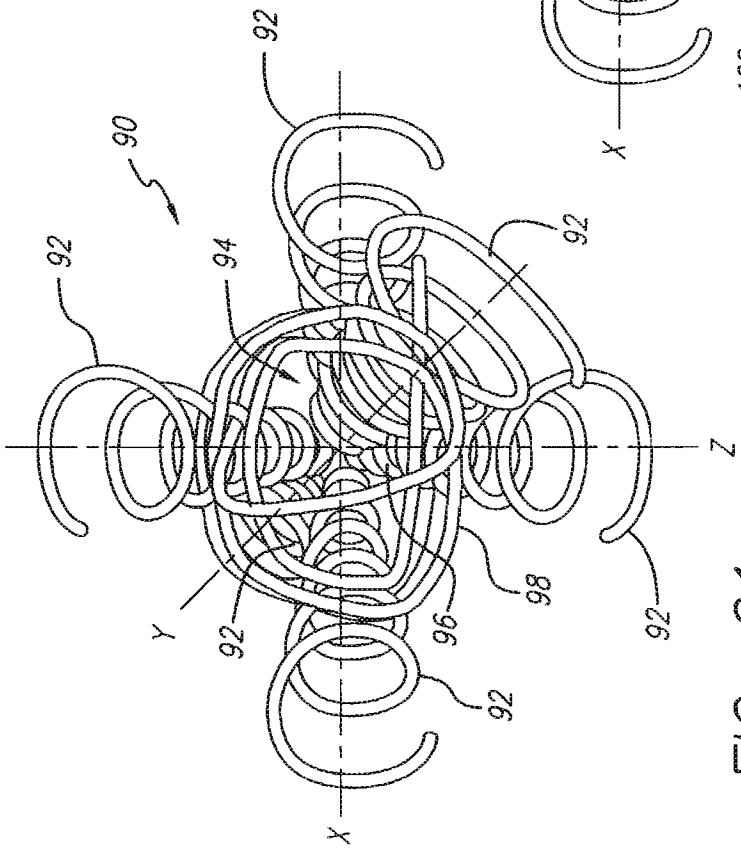

FIG. 21

Aortic Innovations, LLC, Exhibit 2126
Page 2126 - 129
IPR2023-01325, Edwards Lifesciences Corp. et al v. Aortic Innovations, LLC

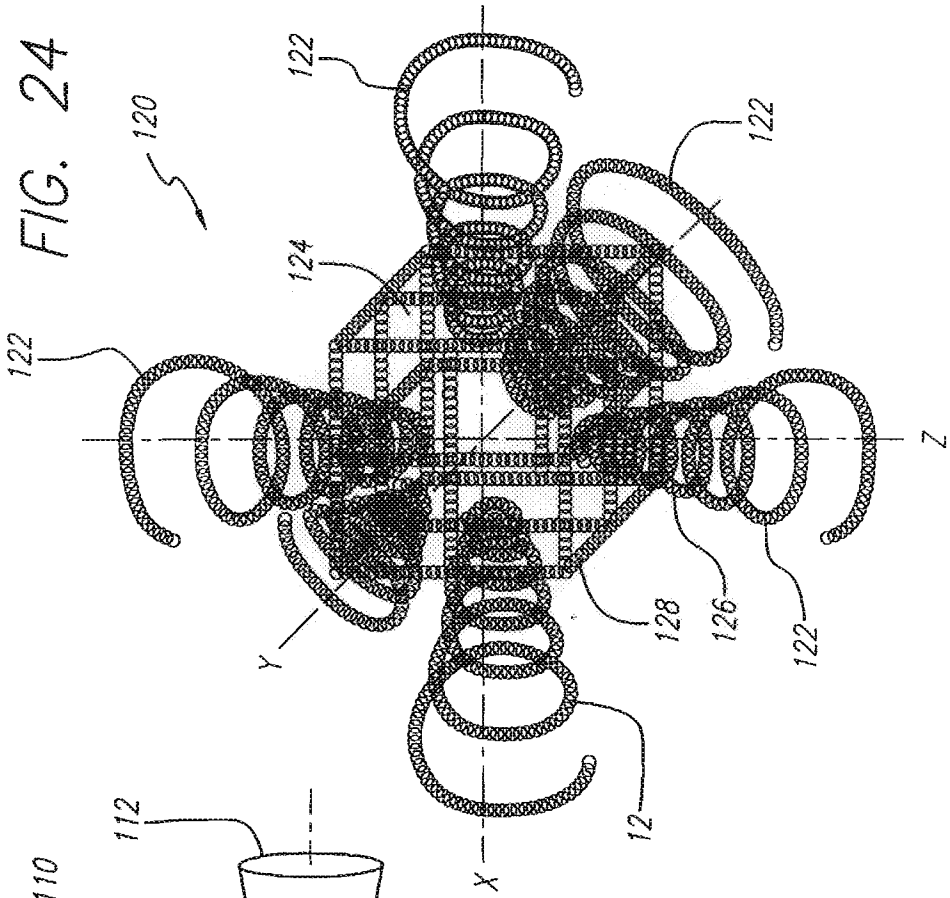

FIG. 24

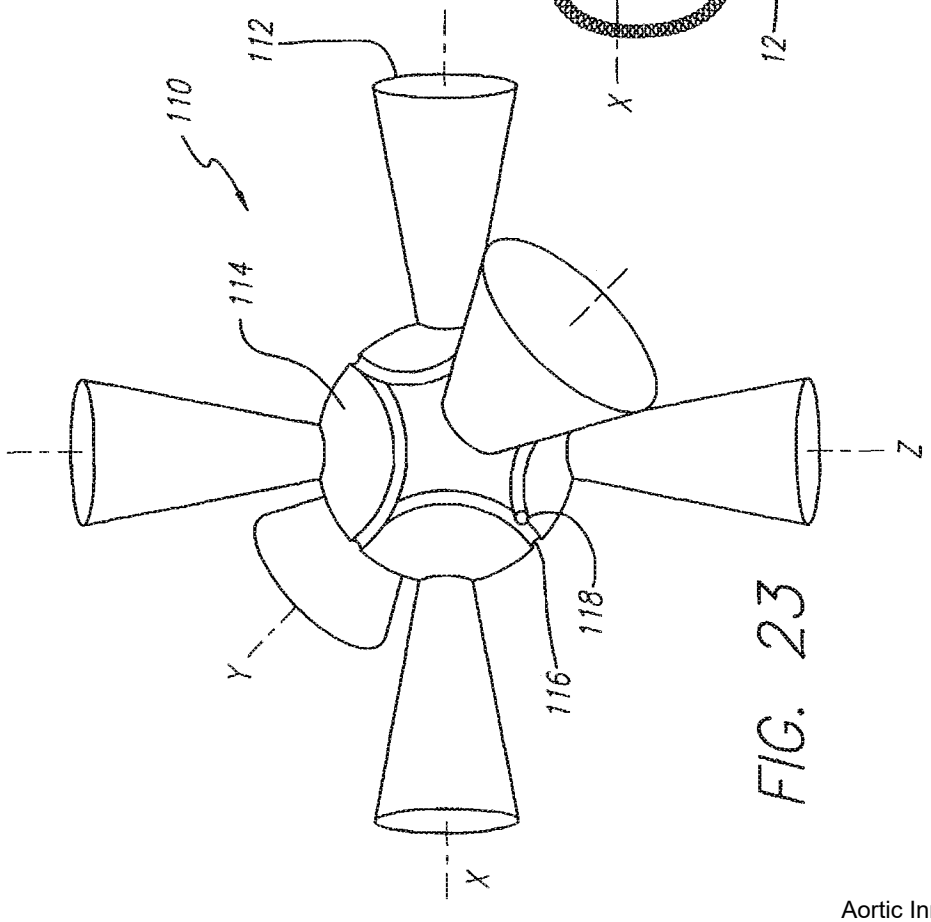

FIG. 23

Aortic Innovations, LLC, Exhibit 2126
Page 2126 - 130
IPR2023-01325; Edwards Lifesciences Corp. et al v. Aortic Innovations, LLC

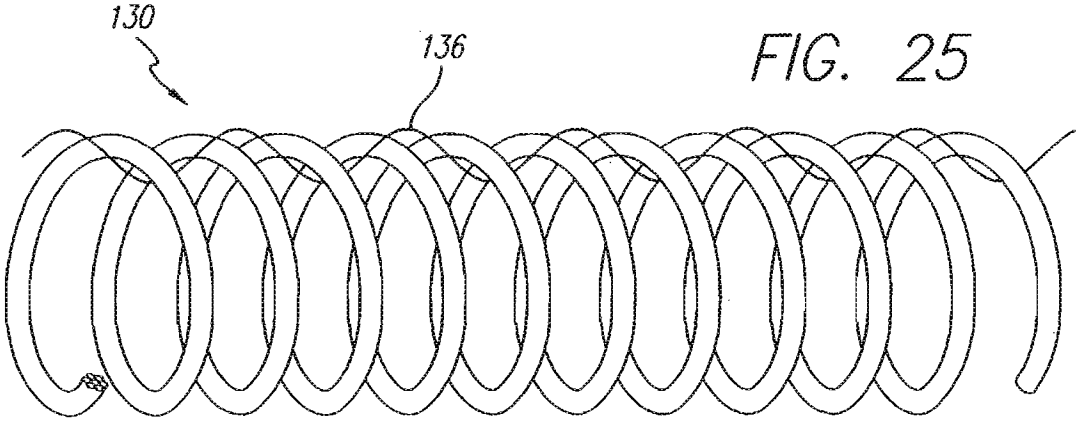

FIG. 25

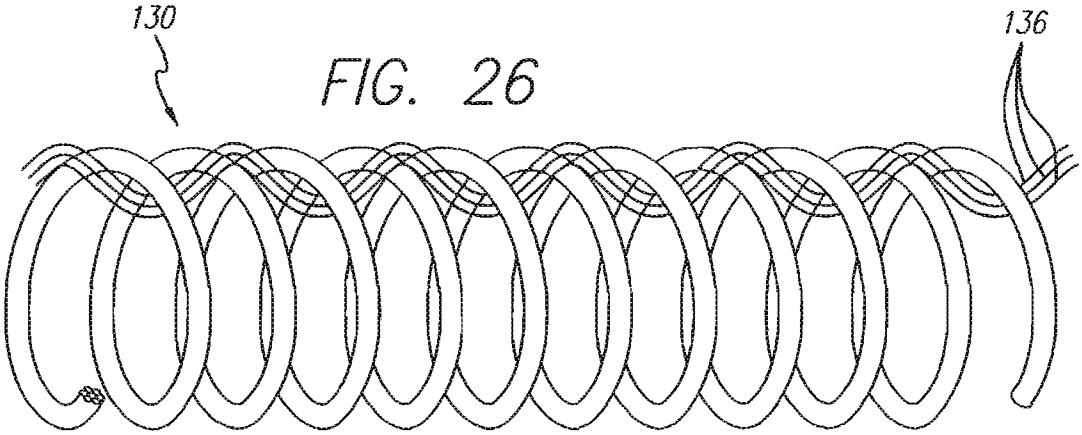

FIG. 26

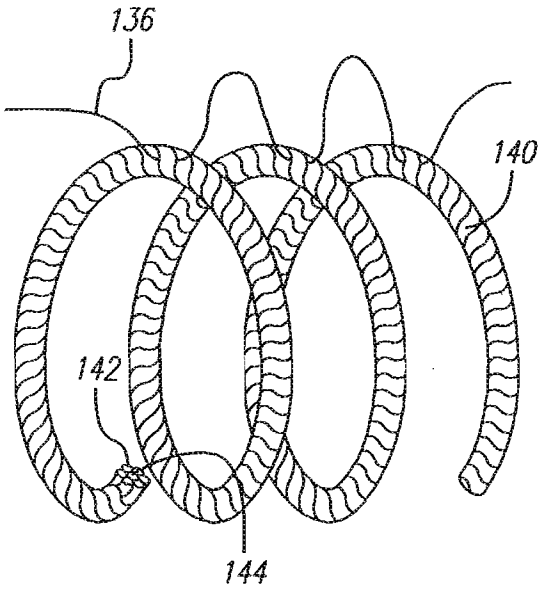

FIG. 27

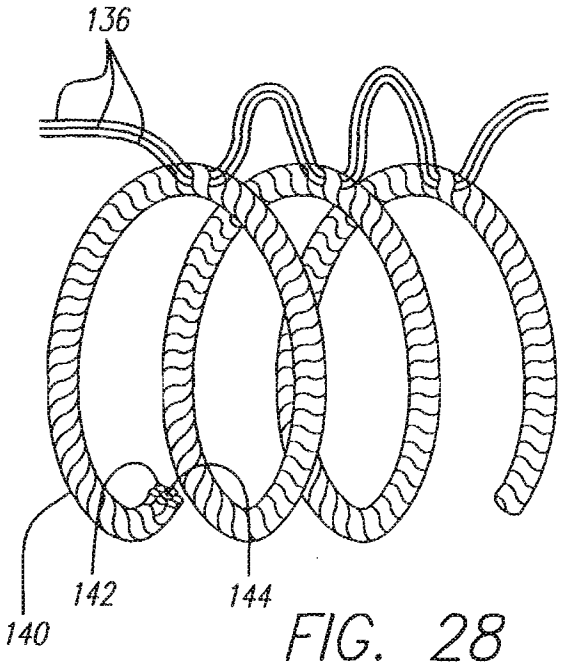

FIG. 28

Aortic Innovations, LLC, Exhibit 2126
Page 2126 - 131
IPR2021-01315, Edwards Lifesciences Corp. et al v. Aortic Innovations, LLC

RCE

Doc Code:

OIPE IAP95 JAN 2 2 2008 PATENT & TRADEMARK OFFICE

PTO/SB/30 (01-08)
Approved for use through 01/31/2008. OMB 0651-0031
U.S. Patent and Trademark Office; U.S. DEPARTMENT OF COMMERCE

Under the Paperwork Reduction Act of 1995, no persons are required to respond to a collection of information unless it contains a valid OMB control number.

Request for Continued Examination (RCE) Transmittal

Address to:
Mail Stop RCE
Commissioner for Patents
P.O. Box 1450
Alexandria, VA 22313-1450

Application Number	10/018,164
Filing Date	05/20/2002
First Named Inventor	Timothy A.M. Chuter
Art Unit	3731
Examiner Name	Michael H. Thaler
Attorney Docket Number	C010-1001A-RCE

This is a Request for Continued Examination (RCE) under 37 CFR 1.114 of the above-identified application.
Request for Continued Examination (RCE) practice under 37 CFR 1.114 does not apply to any utility or plant application filed prior to June 8, 1995, or to any design application. See Instruction Sheet for RCEs (not to be submitted to the USPTO) on page 2.

1. Submission required under 37 CFR 1.114 Note: If the RCE is proper, any previously filed unentered amendments and amendments enclosed with the RCE will be entered in the order in which they were filed unless applicant instructs otherwise. If applicant does not wish to have any previously filed unentered amendment(s) entered, applicant must request non-entry of such amendment(s).

   a. ☑ Previously submitted. If a final Office action is outstanding, any amendments filed after the final Office action may be considered as a submission even if this box is not checked.

      i. ☐ Consider the arguments in the Appeal Brief or Reply Brief previously filed on _____

      ii. ☐ Other _____

   b. ☑ Enclosed

      i. ☑ Amendment/Reply

      ii. ☐ Affidavit(s)/ Declaration(s)

      iii. ☐ Information Disclosure Statement (IDS)

      iv. ☐ Other _____

2. Miscellaneous

   a. ☐ Suspension of action on the above-identified application is requested under 37 CFR 1.103(c) for a period of _____ months. (Period of suspension shall not exceed 3 months; Fee under 37 CFR 1.17(i) required)

   b. ☐ Other _____

3. Fees The RCE fee under 37 CFR 1.17(e) is required by 37 CFR 1.114 when the RCE is filed.

   a. ☐ The Director is hereby authorized to charge the following fees, any underpayment of fees, or credit any overpayments, to Deposit Account No. _____. I have enclosed a duplicate copy of this sheet.

      i. ☑ RCE fee required under 37 CFR 1.17(e)

      ii. ☑ Extension of time fee (37 CFR 1.136 and 1.17)

      iii. ☐ Other _____

   b. ☐ Check in the amount of $ _____ enclosed

   c. ☑ Payment by credit card (Form PTO-2038 enclosed)

WARNING: Information on this form may become public. Credit card information should not be included on this form. Provide credit card information and authorization on PTO-2038.

SIGNATURE OF APPLICANT, ATTORNEY, OR AGENT REQUIRED

Signature		Date	January 17, 2008
Name (Print/Type)	William G. Lane	Registration No.	24,761

CERTIFICATE OF MAILING OR TRANSMISSION

I hereby certify that this correspondence is being deposited with the United States Postal Service with sufficient postage as first class mail in an envelope addressed to: Mail Stop RCE, Commissioner for Patents, P. O. Box 1450, Alexandria, VA 22313-1450 or facsimile transmitted to the U.S. Patent and Trademark Office on the date shown below.

Signature			
Name (Print/Type)	Maureen Vieira	Date	January 17, 2008

This collection of information is required by 37 CFR 1.114. The information is required to obtain or retain a benefit by the public which is to file (and by the USPTO to process) an application. Confidentiality is governed by 35 U.S.C. 122 and 37 CFR 1.11 and 1.14. This collection is estimated to take 12 minutes to complete, including gathering, preparing, and submitting the completed application form to the USPTO. Time will vary depending upon the individual case. Any comments on the amount of time you require to complete this form and/or suggestions for reducing this burden, should be sent to the Chief Information Officer, U.S. Patent and Trademark Office, U.S. Department of Commerce, P.O. Box 1450, Alexandria, VA 22313-1450. DO NOT SEND FEES OR COMPLETED FORMS TO THIS ADDRESS. **SEND TO: Mail Stop RCE, Commissioner for Patents, P.O. Box 1450, Alexandria, VA 22313-1450.**
If you need assistance in completing the form, call 1-800-PTO-9199 and select option 2.

01/23/2008 SSITHIB1 00000062 10018164
01 FC:2801 405.00 OP

OIPE IAP55
JAN 2 2 2008
PATENT & TRADEMARK OFFICE

Attorney Docket: C010-1001A-RCE

IN THE UNITED STATES PATENT AND TRADEMARK OFFICE

Applicant:	Timothy A.M. Chuter	Examiner:	Michael H. Thaler
Serial No.:	10/018,164	Art Unit:	3731
Date Filed:	May 20, 2002		
For:	LARGE VESSEL STENTS AND OCCLUDERS		

Mail Stop RCE
Commissioner for Patents
P.O. Box 1450
Alexandria, VA 22313-1450

Certificate of Mailing

I hereby certify that this document, together with any described as being attached or enclosed, is being deposited with the United States Postal Service as first class mail, postage fully prepaid, addressed to Commissioner for Patents, P.O. Box 1450, Alexandria, VA 22313-1450 on JAN. 17, 2008

Executed on 1/17/08 Maureen Vieira
Maureen Vieira

AMENDMENT SUBMITTED WITH RCE

Sir:

This communication is responsive to the Final Office Action mailed on July 18, 2007 in the above-identified application. This amendment is substantially identical to the amendment filed in response to the Final Office Action mailed on July 18, 2007, but not entered because the amendment allegedly raised new issues that would require further consideration and/or search; and/or they presented additional claims without cancelling a corresponding number of finally rejected claims. Since the amendment was not entered, Claims 1-34 are in the application.

This amendment amends Claims 1, 4, 29; adds new dependent Claims 35-39; and cancels original Claims 6-15 without prejudice.

No additional claim filing fees are required because original Claims 6-15 are cancelled.

Applicant respectfully submits that this amendment is fully responsive to the Final Office Action in the above application and meets the submission requirements of 37 CFR 1.114. This amendment should be entered since the prior unentered amendment has not been entered. Applicant requests the finality of the Final Office Action be withdrawn.

01/23/2008 SSITHIB1 00000062 10018164
02 FC:2253 525.00 OP

CLAIMS LISTING

1. (currently amended) An endovascular stent for a vascular vessel comprising a generally tubular stent adapted to permanently expand from a first diameter to a larger second diameter, the stent made of at least one helically wound wire, each wire of the stent comprising at least two twisted strands, the twisted strands securing fibers between the twisted strands to form a fiber pile extending outwardly from the stent.

2. (original) The endovascular stent according to Claim 1 wherein the twisted strands also securing fibers to form a fiber pile extending inwardly into the stent to substantially occlude the inner bore of the stent.

3. (original) The endovascular stent of Claim 1 wherein the fibers are coated with at least a partially dehydrated hydrophilic polymeric gel.

4. (currently amended) An endovascular stent for occluding the lumen of a vascular vessel comprising a stent adapted to be expanded in the lumen of a vascular vessel, the stent having a general conical shape prior to and after expansion with ~~a generally conical-shaped stent member having~~ a first large diameter at one end and a small diameter at the opposing end, the stent adapted to have ~~permanently expand~~ the first large diameter permanently expanded to a larger diameter, the stent made of at least one helically wound wire, each wire of the stent comprising at least two twisted strands, the twisted strands securing fibers between the twisted strands to form a fiber pile extending outwardly from the stent and extending inwardly into the stent to substantially occlude the inner bore of the stent.

5. (original) The endovascular stent of Claim 4 wherein the fibers are coated with at least a partially dehydrated hydrophilic polymeric gel.

Claims 6-15 (cancelled)

16. (previously presented) The endovascular stent according to Claim 1 wherein the fibers are coated with a pharmaceutically acceptable hydrophilic polymeric gel compatible with mammal body tissues and fluids.

17. (previously presented) The endovascular stent according to Claim 16 wherein the hydrophilic polymeric gel is partially dehydrated.

18. (previously presented) The endovascular stent according to Claim 16 wherein the hydrophilic polymeric gel is fully hydrated.

19. (previously presented) The endovascular stent according to Claim 17 wherein the partially dehydrated hydrophilic polymeric gel is adapted to be hydrated by body fluids.

20. (previously presented) The endovascular stent according to Claim 18 wherein the fully hydrated hydrophilic polymeric gel is adapted to be hydrated by body fluids.

21. (previously presented) The endovascular stent according to Claim 16 wherein the hydrophilic polymeric gel coats the fibers of the fiber pile.

22. (previously presented) The endovascular stent according to Claim 16 wherein the hydrophilic polymeric gel encapsulates the fiber pile.

23. (previously presented) The endovascular stent according to Claim 16 wherein one or more beads of the hydrophilic polymeric gel are attached to the fibers.

24. (previously presented) The endovascular stent according to Claim 16 wherein the hydrophilic polymeric gel is not soluble in the body tissues and fluids.

25. (previously presented) The endovascular stent according to Claim 1 wherein the fibers of the fiber pile are biocompatible fibers.

26. (previously presented) The endovascular stent according to Claim 1 wherein the stent is a self-expanding stent adapted to permanently expand from a first diameter to a larger second diameter.

27. (previously presented) The endovascular stent according to Claim 1 wherein the stent is expandable to permanently expand from a first diameter to a larger second diameter.

28. (previously presented) The endovascular stent according to Claim 1 wherein the fiber pile is adapted to form a foundation for tissue growth between the fiber pile and a surrounding lumenal wall of a vascular vessel when the stent is implanted in a patient.

29. (currently amended) The endovascular stent according to Claim 1 wherein the stent is made of a least two or more helically wound wires, each wire of the stent comprising at least two twisted strands, the twisted strands securing fibers between the strands to form a fiber pile extending outwardly from the stent.

30. (previously presented) The endovascular stent according to Claim 29 where at least one helically wound wire is wound in a first direction.

31. (previously presented) The endovascular stent according to Claim 30 wherein at least one other helically wound wire is wound in a second direction.

32. (previously presented) The endovascular stent according to Claim 31 wherein the helically wound wire is in one direction and the helically wound wire is in the other direction are interwoven to form an interweaving structure stent.

33. (previously presented) The endovascular stent according to Claim 31 wherein at least one of the helically wound wires crosses over and crosses under at least one other helically wound wire in a predetermined pattern.

34. (currently amended) An endovascular stent for a vascular vessel comprising a longitudinal stent having a circular configuration in cross section at any point longitudinal along its length, the stent adapted to be permanently expanded radially outward along its length, the stent made of least one helically wound wire, each wire of the stent comprising at least two twisted strands, the twisted strands securing fibers between the twisted strands to form a fiber pile extending outwardly from the stent.

35. (new) The endovascular stent of Claim 1 wherein the fiber pile extending outwardly from the stent extends radially outwardly.

36. (new) The endovascular stent of Claim 2 wherein the fiber pile extending inwardly into the stent extends radially inwardly.

37. (new) The endovascular stent of Claim 4 wherein the fiber pile extending outwardly from the stent extends radially outwardly.

38. (new) The endovascular stent of Claim 4 wherein the fiber pile extending inwardly into the stent extends radially inwardly.

39. (new) The endovascular stent of Claim 34 wherein the fiber pile extending outwardly from the stent extends radially outwardly.

REMARKS

Claims 1-5 and 16-39 are in the application. Claims 1, 4, 29, and 34 have been amended, and new Claims 35-39 have been added, and original Claims 6-15 have been cancelled without prejudice.

Claims 6-15 were withdrawn from consideration pursuant to an election made to the restriction requirement mailed on January 25, 2005. Applicant intends to file a divisional application to pick up the subject matter of the nonelected inventions.

Support of amended Claims 1, 29, and 34 is found on page 5, lines 25-31; and page 10, lines 19-30; and Figures 8, 9, and 10. Support for amended Claim 4 is found on page 5, lines 33-34; page 6, lines 1-9; page 10, lines 19-24; and Figures 5-7.

Support for new Claims 35-39 is found on page 5, lines 25-30; page 10, lines 10-30; Figures 6-7 (fiber pile 18A); and Figures 8-10 (fiber piles 18a and 18b).

It is submitted that the amended Claims 1, 4, 29, and 34, and the new Claims 35-39 are fully supported by the application as filed, and add no new matter to the application.

Amended Claims 1, 4, 29, and 34 specify that the twisted strands of each wire of the stent securing fibers forming the fabric pile <u>between the strands</u> as described in the specification and illustrated in the drawings, e.g. Figure 7.

Amended Claim 4 in addition specifies that the stent has a conical shape prior to and after expansion as described in the specification and illustrated in the drawings, e.g. Figure 5.

New Claims 35-39 are dependent upon Claims 1, 2, 4, and 34 and specify that the fabric pile extending outwardly in Claims 1, 2, and 34 extend <u>radially</u> outwardly and the fabric pile extending outwardly and inwardly in Claim 4 extends <u>radially</u> outwardly and inwardly.

Before discussing the rejections in detail, applicant wishes to point out that each claim specifies that the twisted strands of each helically wound wire of the stent secure fibers

between the twisted strands to form a fiber pile extending outwardly from (and "inwardly into" in some claims) the stent. These features are not taught by any of the cited references and the references do not lend motivation to one ordinarily skilled in the art to alter the teachings of the references to obtain these features.

REJECTIONS

Claims 1, 2, 4, and 25-34 have been rejected under 35 U.S.C. 103(a) as being unpatentable over Callister et al. (6,432,116) in view of Anson et al. (6,432,134). The Action mailed on July 18, 20076 (the "Action") alleges that Callister et al., in Figs. 10-11, disclose a tubular stent made of at least one helically wound wire (at 11 and described as being braided in col. 7, lines 35-38) securing fibers (the strands which form layer 16 as described in col. 5, lines 45-64) **to form a fiber pile extending outwardly from the stent**. [emphasis added]

The above teaching in column 7 of Callister et al. is directed to a braided tube, i.e. tubular member 11 comprises a braided tube of wire or ribbon (col. 7, lines 37-38), and is not relevant to the patentability of applicant's claimed invention. Applicant's stent is not a braided tube. With regard to the allegation that Callister et al. discloses at least one helically wound wire securing fibers, applicant is unable to find such a disclosure in col. 5, lines 45-64, or elsewhere. That referenced section of Callister et al. teaches that "A mesh layer 16 is provided along at least a section of the outer surface and/or the inner surface of the tubular member... the mesh layer 16 comprises woven or bundled strands... which may be a single or plurality of mesh sheets as described above in connection with the mesh member 15" (col. 5, lines 55-59). There is no teaching in Callister et al. to form a fiber pile extending outward (or inward) from the stent.

Referring to the top of column 5 of Callister et al., "In the embodiment illustrated in Fig. 1 [of Callister et al.], the mesh member 15 extends along the length of the tubular member 11 from the first end 12 to the second end 13 thereof. In another embodiment, illustrated in Fig. 5, the mesh member 15 is disposed in a plurality of sections intermittently spaced along the length of the tubular member. Fig. 6 illustrates another embodiment in which the mesh member 15 caps over the first end of the tubular member 11. In the embodiment illustrated in Fig. 6, the mesh member comprises a single sheet of woven material disposed in an end of the tubular member 11. Alternatively, a plurality of stacked woven mesh sheets may be provided including sheets having different mesh sizes. In the embodiments illustrated in Figs. 1, 5, and 6, the mesh member 15 is within the lumen of the tubular member. The mesh member may be connected to the tubular member by a variety of suitable means including adhesive, heat bonding or solvent bonding." (Callister et al., col. 5, lines 1-18).

With regard to the mesh member 15, Callister et al. teaches that "...the mesh member comprises intertwined strands of a biocompatible material connected to the tubular member 11. In the embodiment illustrated in Fig. 1, the mesh member comprises bundled strands. In the embodiment illustrated in Fig. 6, the mesh member comprises woven strands." (Callister et al., col. 4, lines 55-60)

The statement in the Action, "That Callister discloses securing fibers...to form a fiber pile extending outwardly from the stent." is completely unsupported. Nowhere within Callister et al. is there the slightest teaching of securing fibers to or in twisted strands of the helically wound wire to form a fiber pile extending outwardly from the stent as recited in applicant's claims. Mesh layer 16 of Callister et al., which comprises woven or bundled strands, is not a fiber pile. Fiber piles are found on carpets and velvet and the fiber pile of the present invention is similar to carpet pile (see page 3, lines 29-30 of the application). Fiber piles have a velvety surface of

fine hairs on various surfaces. Callister et al. not only does not disclose a stent with fiber piles, it fails to disclose a stent with fibers that extends outwardly from the stent.

The claims recite that each wire of the stent comprises at least two twisted strands. The Action admits that this feature is not taught by Callister et al. The Action recites that "...Anson et al. teach[s] that a wire which forms a stent should be made from at least two finer strands twisted together in order to obtain the advantage of providing greater mechanical strength (col. 7, lines 34-37 [Anson et al.]). It would have been obvious to form the Callister et al. wire (at 11) from at least two finer strands together so that it would too have this advantage."

Applicant respectfully traverses the Examiner's above conclusion. Even assuming for argument purposes that the combination argued by the Examiner would be made, the suggested combination of twisted strand wires still does not disclose or teach "securing fibers between the twisted strands of a stent wire to form a fiber pile extending outwardly [and/or inwardly] from the stent" so recited in the claims.

As to Claim 2, the Action states that Callister et al. discloses fibers (the fibers of layer 16 which also can extend inwardly into the stent as indicated in col. 5, lines 45-55) extending inwardly into the stent to substantially occlude the inner bore of the stent.

Col. 5, lines 45-55, Callister et al., states that:

> "In one embodiment, illustrated in Fig. 10, a mesh layer 16 is provided along at least a section of the outer surface and/or the inner surface of the tubular member, to facilitate tissue epithelialization along the tubular member 11 and into the mesh member 15. In the embodiment illustrated in Fig. 10, the mesh layer 16 is disposed along the entire length of the outer surface of the tubular member and transversely disposed at the first end of the tubular member. The

mesh layer may be integral extension of the mesh member 15 or a separate member connected to or separate from the mesh member 15."

This section does not disclose fibers or a fiber pile extending inwardly into, or outwardly from, the stent.

With regard to Claim 4, the Action recites that the stent of Callister et al. is generally conical-shaped in Figs. 18-19. Figs. 17, 18, and 19 are grouped together and discussed together by Callister et al. Callister et al. makes reference to Fig. 16, which shows insertion of the Callister et al. device in the fallopian tubes of a female patient, when discussing the device of Figs. 17-18. The contraceptive device of Figs. 17-19, is a tubular member 11 which has a cylindrical shape prior to insertion, placement and expansion (see Fig. 17). In Fig. 17, the cylindrical, not conical, stent is in its non-contracted state and has not been expanded. A balloon 38 is inserted into the lumen of the tubular member 11 and filled with liquid – a standard practice for expanding stents. The cylindrical stent with the balloon is inserted into the lumen of the fallopian tube using medical catheter techniques. When the stent has been positioned at the desired location by the physician, the balloon is expanded and a portion of the outer surface of the stent comes in contact with the inner surface of the fallopian tube (see Figs. 17-19 and the paragraph bridging cols. 6 and 7 of Callister et al.). The Callister et al. stent prior to expansion is not conical-shaped; the stent is cylindrical-shaped. Stents are described and claimed in their pre-expansion state. This is how they are manufactured, sold, and used, just as a bomb would be described and claimed in its pre-detonation state. Claim 4 as amended clearly specifies that this stent is in its pre-expanded state. Nowhere does Callister et al. disclose a conical stent in its pre-expanded state. In fact, Callister et al. teaches away from using a stent with a section having a larger diameter than the other prior to the expansion step (see col. 6, lines 36-59).

Claims 3, 5, 16, and 20 are rejected also under 35 U.S.C. 103(a) as being unpatentably over Callister et al. (6,432,116) in view of Anson et al. (6,432,034) as applied to Claims 1 and 4 above and further in view of either Whitbounre (5,331,027) or Slaikeu et al. (5,443,907). The Action continues, "...It is old and well-known in this art to include such a gel on devices inserted into the body in order to obtain the advantage of making it slippery to facilitate such insertion. For example, Whitbounre (5,331,027) or Slaikeu et al. (5,443,907) each disclose this." This rejection concludes with a statement: "It would have been obvious to include such gel on the Callister et al. device so that it too would have this advantage."

Applicant cannot speak to whether it would have been obvious to include the gel on the Callister et al. device, but the applicant can clearly state that its claimed device is not disclosed by Callister et al., alone or in view of Anson et al., and in further view of either Whitbounre or Slaikeu et al. None of the references teach a stent having a fiber pile extending outwardly from the stent. In addition, they do not teach having the twisted strands of the stent wire securing fibers between the twisted strands to form a fiber pile. All the elements of the rejected Claims 3, 5, 16 and 24 are not disclosed by the references, and there is no motivation in any of the art to modify the references to meet all the claimed elements.

The Action addresses arguments made by the applicant in response to the first Action. Applicant argued and continues to argue that the fibers of the claimed invention are not woven to form a mesh as in Callister et al. In response to this point, the Action states that "Callister et al. teach that the strands can be bundled rather than woven (col. 4, lines 57-60, and col. 5, lines 55-56)". The above referenced lines of Callister et al. refer to bundled strands for the mesh member 15 and the mesh layer 16, not fiber pile comprising fibers that are secured by the twisted strands of the helical wire. The fabric pile of the claimed invention is a key element. None of the references disclose a stent with a fabric pile.

The Action continues that: "In response to the argument near the bottom of page 2 of the response that fabric piles have depth, while fiber mesh is sheet-like and has relatively little depth, it is noted that the fibers of mesh 15 shown in Figs. 1-5, for example, clearly have significant depth and that the fibers forming layer 16 in Fig. 10 may be an extension of mesh member 15 (col. 5, lines 52-53)."

Callister never teaches that "the fibers forming layer 16 in Figure 10 may be an extension of the mesh member 15 at col. 5, lines 52-53 or elsewhere. The referenced lines are quoted above on page 9. With regard to Figure 4, Callister et al. states: "As illustrated in Fig. 4, showing a transverse cross section of the tubular member shown in Fig. 3 taken along lines 4-4, the mesh member 15 expands so that it extends across the expanded lumen 14 of the tubular member 11" (col. 4, lines 36-39). Fig. 3 is an elevational view of the occluding device shown in Fig. 1, in an expanded configuration (col. 3, lines 27-28). The description of Figs. 1-5 clearly teaches that 15 is a mesh member, not a fabric pile (col. 4, lines 31-49).

The fiber pile cannot be a mesh member because the fiber pile cannot expand so that it extends across the expanded lumen of the stent. The fibers of the fiber pile have a finite length and that length determines the depth of the pile. The fibers of the pile must have sufficient length before the stent lumen is expanded to bridge the expanded lumen of the stent.

There is absolutely no teaching in the drawings or specification of Callister et al. about fibers of fiber piles or about the fibers of fiber piles extending inwardly or outwardly.

The Action continues and states, "As to Claim 4, although the Callister et al. stent eventually becomes cylindrical upon full expansion, it is generally conical-shaped prior to full expansion as shown in Figs. 18-19. The claim [4] does not require the stent to be generally conical-shaped upon full expansion." Claim 4 as amended does require the stent to be generally conical-shaped prior to and after expansion.

The Examiner referred the applicant to page 7, lines 25-30, of applicant's specification with regard to the arguments made in the first full paragraph of applicant's response to the first action on the merits. As to the sentence on lines 6-7 of the first full paragraph on page 6 of the Response to the Office Action mailed on April 26, 2007, applicant retracts the sentence which was overly broad. What applicant meant was that it is not well-known to place a gel on stents placed into the vascular system. Applicant congratulates the Examiner on his sharp eye.

Applicant respectfully submits that in light of the claims as amended, and currently in the application, and in view of the above remarks, the application is in condition for allowance, and the claims as amended are patentable over the four cited references identified in the Office Action and discussed above.

A favorable action is solicited.

Respectfully submitted,

Date: Jan. 17, 2008

William G. Lane
Registration No. 24,761

Correspondence Address:
WILLIAM G. LANE, INC., P.C.
16485 Laguna Canyon Road, #250
Irvine, California 92618
Telephone: 949-585-0348
Facsimile: 949-585-0494

PTO/SB/06 (07-06)
Approved for use through 1/31/2007. OMB 0651-0032
U.S. Patent and Trademark Office; U.S. DEPARTMENT OF COMMERCE
Under the Paperwork Reduction Act of 1995, no persons are required to respond to a collection of information unless it displays a valid OMB control number.

PATENT APPLICATION FEE DETERMINATION RECORD

Substitute for Form PTO-875

Application or Docket Number	Filing Date	☐ To be Mailed
10/018,164	05/20/2002	

APPLICATION AS FILED – PART I

FOR	(Column 1) NUMBER FILED	(Column 2) NUMBER EXTRA	SMALL ENTITY RATE ($)	SMALL ENTITY FEE ($)	OR	OTHER THAN SMALL ENTITY RATE ($)	OTHER THAN SMALL ENTITY FEE ($)
☐ BASIC FEE (37 CFR 1.16(a), (b), or (c))	N/A	N/A	N/A			N/A	
☐ SEARCH FEE (37 CFR 1.16(k), (i), or (m))	N/A	N/A	N/A			N/A	
☐ EXAMINATION FEE (37 CFR 1.16(o), (p), or (q))	N/A	N/A	N/A			N/A	
TOTAL CLAIMS (37 CFR 1.16(i))	minus 20 =	*	X $ =		OR	X $ =	
INDEPENDENT CLAIMS (37 CFR 1.16(h))	minus 3 =	*	X $ =			X $ =	
☐ APPLICATION SIZE FEE (37 CFR 1.16(s))	If the specification and drawings exceed 100 sheets of paper, the application size fee due is $250 ($125 for small entity) for each additional 50 sheets or fraction thereof. See 35 U.S.C. 41(a)(1)(G) and 37 CFR 1.16(s).						
☐ MULTIPLE DEPENDENT CLAIM PRESENT (37 CFR 1.16(j))							
* If the difference in column 1 is less than zero, enter "0" in column 2.			TOTAL			TOTAL	

APPLICATION AS AMENDED – PART II

AMENDMENT 01/22/2008

	(Column 1) CLAIMS REMAINING AFTER AMENDMENT		(Column 2) HIGHEST NUMBER PREVIOUSLY PAID FOR	(Column 3) PRESENT EXTRA	SMALL ENTITY RATE ($)	SMALL ENTITY ADDITIONAL FEE ($)	OR	OTHER THAN SMALL ENTITY RATE ($)	OTHER THAN SMALL ENTITY ADDITIONAL FEE ($)
Total (37 CFR 1.16(i))	* 29	Minus	** 34	= 0	X $ =		OR	X $50=	0
Independent (37 CFR 1.16(h))	* 3	Minus	***8	= 0	X $ =		OR	X $210=	0
☐ Application Size Fee (37 CFR 1.16(s))									
☐ FIRST PRESENTATION OF MULTIPLE DEPENDENT CLAIM (37 CFR 1.16(j))							OR		
					TOTAL ADD'L FEE		OR	TOTAL ADD'L FEE	0

AMENDMENT

	(Column 1) CLAIMS REMAINING AFTER AMENDMENT		(Column 2) HIGHEST NUMBER PREVIOUSLY PAID FOR	(Column 3) PRESENT EXTRA	RATE ($)	ADDITIONAL FEE ($)		RATE ($)	ADDITIONAL FEE ($)
Total (37 CFR 1.16(i))	*	Minus	**	=	X $ =		OR	X $ =	
Independent (37 CFR 1.16(h))	*	Minus	***	=	X $ =		OR	X $ =	
☐ Application Size Fee (37 CFR 1.16(s))									
☐ FIRST PRESENTATION OF MULTIPLE DEPENDENT CLAIM (37 CFR 1.16(j))							OR		
					TOTAL ADD'L FEE		OR	TOTAL ADD'L FEE	

* If the entry in column 1 is less than the entry in column 2, write "0" in column 3.
** If the "Highest Number Previously Paid For" IN THIS SPACE is less than 20, enter "20".
*** If the "Highest Number Previously Paid For" IN THIS SPACE is less than 3, enter "3".
The "Highest Number Previously Paid For" (Total or Independent) is the highest number found in the appropriate box in column 1.

Legal Instrument Examiner:
/LISA FULTON/

This collection of information is required by 37 CFR 1.16. The information is required to obtain or retain a benefit by the public which is to file (and by the USPTO to process) an application. Confidentiality is governed by 35 U.S.C. 122 and 37 CFR 1.14. This collection is estimated to take 12 minutes to complete, including gathering, preparing, and submitting the completed application form to the USPTO. Time will vary depending upon the individual case. Any comments on the amount of time you require to complete this form and/or suggestions for reducing this burden, should be sent to the Chief Information Officer, U.S. Patent and Trademark Office, U.S. Department of Commerce, P.O. Box 1450, Alexandria, VA 22313-1450. DO NOT SEND FEES OR COMPLETED FORMS TO THIS ADDRESS. **SEND TO: Commissioner for Patents, P.O. Box 1450, Alexandria, VA 22313-1450.**
If you need assistance in completing the form, call 1-800-PTO-9199 and select option 2.

UNITED STATES PATENT AND TRADEMARK OFFICE

UNITED STATES DEPARTMENT OF COMMERCE
United States Patent and Trademark Office
Address: COMMISSIONER FOR PATENTS
P.O. Box 1450
Alexandria, Virginia 22313-1450
www.uspto.gov

APPLICATION NO.	FILING DATE	FIRST NAMED INVENTOR	ATTORNEY DOCKET NO.	CONFIRMATION NO.
10/018,164	05/20/2002	Timothy A.M. Chuter	C010-1001A-US	8768

7590 11/15/2007
William G Lane
16485 Lagna Canyon Road #250
Irvine, CA 92618

EXAMINER
THALER, MICHAEL H

ART UNIT	PAPER NUMBER
3731	

MAIL DATE	DELIVERY MODE
11/15/2007	PAPER

Please find below and/or attached an Office communication concerning this application or proceeding.

The time period for reply, if any, is set in the attached communication.

Advisory Action Before the Filing of an Appeal Brief	Application No. 10/018,164	Applicant(s) CHUTER, TIMOTHY A.M.	
	Examiner Michael Thaler	Art Unit 3731	

CT

--The MAILING DATE of this communication appears on the cover sheet with the correspondence address --

THE REPLY FILED 23 October 2007 FAILS TO PLACE THIS APPLICATION IN CONDITION FOR ALLOWANCE.

1. ☒ The reply was filed after a final rejection, but prior to or on the same day as filing a Notice of Appeal. To avoid abandonment of this application, applicant must timely file one of the following replies: (1) an amendment, affidavit, or other evidence, which places the application in condition for allowance; (2) a Notice of Appeal (with appeal fee) in compliance with 37 CFR 41.31; or (3) a Request for Continued Examination (RCE) in compliance with 37 CFR 1.114. The reply must be filed within one of the following time periods:
   a) ☒ The period for reply expires 3 months from the mailing date of the final rejection.
   b) ☐ The period for reply expires on: (1) the mailing date of this Advisory Action, or (2) the date set forth in the final rejection, whichever is later. In no event, however, will the statutory period for reply expire later than SIX MONTHS from the mailing date of the final rejection.
   Examiner Note: If box 1 is checked, check either box (a) or (b). ONLY CHECK BOX (b) WHEN THE FIRST REPLY WAS FILED WITHIN TWO MONTHS OF THE FINAL REJECTION. See MPEP 706.07(f).

Extensions of time may be obtained under 37 CFR 1.136(a). The date on which the petition under 37 CFR 1.136(a) and the appropriate extension fee have been filed is the date for purposes of determining the period of extension and the corresponding amount of the fee. The appropriate extension fee under 37 CFR 1.17(a) is calculated from: (1) the expiration date of the shortened statutory period for reply originally set in the final Office action; or (2) as set forth in (b) above, if checked. Any reply received by the Office later than three months after the mailing date of the final rejection, even if timely filed, may reduce any earned patent term adjustment. See 37 CFR 1.704(b).

NOTICE OF APPEAL

2. ☐ The Notice of Appeal was filed on _____. A brief in compliance with 37 CFR 41.37 must be filed within two months of the date of filing the Notice of Appeal (37 CFR 41.37(a)), or any extension thereof (37 CFR 41.37(e)), to avoid dismissal of the appeal. Since a Notice of Appeal has been filed, any reply must be filed within the time period set forth in 37 CFR 41.37(a).

AMENDMENTS

3. ☒ The proposed amendment(s) filed after a final rejection, but prior to the date of filing a brief, will not be entered because
   (a) ☒ They raise new issues that would require further consideration and/or search (see NOTE below);
   (b) ☐ They raise the issue of new matter (see NOTE below);
   (c) ☐ They are not deemed to place the application in better form for appeal by materially reducing or simplifying the issues for appeal; and/or
   (d) ☒ They present additional claims without canceling a corresponding number of finally rejected claims.
   NOTE: *See Continuation Sheet*. (See 37 CFR 1.116 and 41.33(a)).
4. ☐ The amendments are not in compliance with 37 CFR 1.121. See attached Notice of Non-Compliant Amendment (PTOL-324).
5. ☐ Applicant's reply has overcome the following rejection(s): _____.
6. ☐ Newly proposed or amended claim(s) _____ would be allowable if submitted in a separate, timely filed amendment canceling the non-allowable claim(s).
7. ☒ For purposes of appeal, the proposed amendment(s): a) ☒ will not be entered, or b) ☐ will be entered and an explanation of how the new or amended claims would be rejected is provided below or appended.
   The status of the claim(s) is (or will be) as follows:
   Claim(s) allowed: _____.
   Claim(s) objected to: _____.
   Claim(s) rejected: *1-5 and 16-34*.
   Claim(s) withdrawn from consideration: *6-15*.

AFFIDAVIT OR OTHER EVIDENCE

8. ☐ The affidavit or other evidence filed after a final action, but before or on the date of filing a Notice of Appeal will not be entered because applicant failed to provide a showing of good and sufficient reasons why the affidavit or other evidence is necessary and was not earlier presented. See 37 CFR 1.116(e).
9. ☐ The affidavit or other evidence filed after the date of filing a Notice of Appeal, but prior to the date of filing a brief, will not be entered because the affidavit or other evidence failed to overcome all rejections under appeal and/or appellant fails to provide a showing a good and sufficient reasons why it is necessary and was not earlier presented. See 37 CFR 41.33(d)(1).
10. ☐ The affidavit or other evidence is entered. An explanation of the status of the claims after entry is below or attached.

REQUEST FOR RECONSIDERATION/OTHER

11. ☐ The request for reconsideration has been considered but does NOT place the application in condition for allowance because: _____
12. ☐ Note the attached Information Disclosure Statement(s). (PTO/SB/08) Paper No(s). _____
13. ☐ Other: _____.

Michael Thaler
Primary Examiner
Art Unit: 3731

Aortic Innovations, LLC, Exhibit 2126
Page 2126 - 149
IPR2023-01325, Edwards Lifesciences Corp. et al v. Aortic Innovations, LLC

Continuation of 3. NOTE: The new issues arise from the new limitations in claim 1, lines 4-5 and claim 4, lines 2-3, for example.

OIPE IAP55
OCT 23 2007
PATENT & TRADEMARK OFFICE

Attorney Docket: C010-1001A-US

IN THE UNITED STATES PATENT AND TRADEMARK OFFICE

Applicant:	Timothy A.M. Chuter	Examiner:	Michael H. Thaler
Serial No.:	10/018,164	Art Unit:	3731
Date Filed:	May 20, 2002		
For:	LARGE VESSEL STENTS AND OCCLUDERS		

Mail Stop Amendment
Commissioner for Patents
P.O. Box 1450
Alexandria, VA 22313-1450

Certificate of Mailing

I hereby certify that this document, together with any described as being attached or enclosed, is being deposited with the United States Postal Service as first class mail, postage fully prepaid, addressed to Commissioner for Patents, P.O. Box 1450, Alexandria, VA 22313-1450 on October 18, 2007

Executed on 10/18/07 Maureen Vieira
Maureen Vieira

do NOT enter

RESPONSE TO OFFICE ACTION

Sir:

This communication is filed in response to the Office Action mailed on July 18, 2007.

This amendment amends Claims 1, 4, 29; adds new dependent Claims 35-39; and cancels original Claims 6-15 without prejudice.

No additional filing fees are required because original Claims 6-15 are cancelled.

OIPE IAP55
OCT 23 2007
PATENT & TRADEMARK OFFICE

1fw 3731

Attorney Docket: C010-1001A-US

IN THE UNITED STATES PATENT AND TRADEMARK OFFICE

Applicant: Timothy A.M. Chuter
Serial No.: 10/018,164
Date Filed: May 20, 2002
For: LARGE VESSEL STENTS AND OCCLUDERS

Examiner: Michael Thaler
Art Unit: 3731

Mail Stop Amendment
Commissioner for Patents
P.O. Box 1450
Alexandria, VA 22313-1450

Certificate of Mailing

I hereby certify that this document, together with any described as being attached or enclosed, is being deposited with the United States Postal Service as first class mail, postage fully prepaid, addressed to Commissioner for Patents, P.O. Box 1450, Alexandria, VA 22313-1450 on October 18, 2007.

Executed on 10/18/2007

Maureen Vieira

Maureen Vieira

TRANSMITTAL

Sir:

The following documents are enclosed in connection with applicant's response to the Office Action dated July 18, 2007.

Response to Office Action;

Certificate of Mailing; and

Post card.

There are no additional fees required.

	Claims Remaining	Highest No. Previously Paid	No. Extra	Rate	Additional Fee Due
Total Claims	29	34		x $ 25 =	$ -0-
Total Independent Claims	3	8		x $105=	-0-
	Total for Claims				$ -0-

Respectfully submitted,

Date: October 18, 2007

William G. Lane, Registration No. 24,761

Correspondence Address:
WILLIAM G. LANE, INC., P.C.
16485 Laguna Canyon Road, #250
Irvine, California 92618
Tel. 949-585-0348
Fax. 949-585-0494

OIPE IAP55
OCT 2 3 2007
PATENT & TRADEMARK OFFICE

Attorney Docket: C010-1001A-US

IN THE UNITED STATES PATENT AND TRADEMARK OFFICE

Applicant:	Timothy A.M. Chuter	Examiner:	Michael H. Thaler
Serial No.:	10/018,164	Art Unit:	3731
Date Filed:	May 20, 2002		
For:	LARGE VESSEL STENTS AND OCCLUDERS		

Mail Stop Amendment
Commissioner for Patents
P.O. Box 1450
Alexandria, VA 22313-1450

Certificate of Mailing

I hereby certify that this document, together with any described as being attached or enclosed, is being deposited with the United States Postal Service as first class mail, postage fully prepaid, addressed to Commissioner for Patents, P.O. Box 1450, Alexandria, VA 22313-1450 on October 18, 2007

Executed on 10/18/07 Maureen Vieira
Maureen Vieira

RESPONSE TO OFFICE ACTION

Sir:

This communication is filed in response to the Office Action mailed on July 18, 2007.

This amendment amends Claims 1, 4, 29; adds new dependent Claims 35-39; and cancels original Claims 6-15 without prejudice.

No additional filing fees are required because original Claims 6-15 are cancelled.

CLAIMS LISTING

1. (currently amended) An endovascular stent for a vascular vessel comprising a generally tubular stent adapted to permanently expand from a first diameter to a larger second diameter, the stent made of at least one helically wound wire, each wire of the stent comprising at least two twisted strands, the twisted strands securing fibers between the twisted strands to form a fiber pile extending outwardly from the stent.

2. (original) The endovascular stent according to Claim 1 wherein the twisted strands also securing fibers to form a fiber pile extending inwardly into the stent to substantially occlude the inner bore of the stent.

3. (original) The endovascular stent of Claim 1 wherein the fibers are coated with at least a partially dehydrated hydrophilic polymeric gel.

4. (currently amended) An endovascular stent for occluding the lumen of a vascular vessel comprising a stent adapted to be expanded in the lumen of a vascular vessel, the stent having a general conical shape prior to and after expansion with ~~a generally conical-shaped stent member having~~ a first large diameter at one end and a small diameter at the opposing end, the stent adapted to have ~~permanently expand~~ the first large diameter permanently expanded to a larger diameter, the stent made of at least one helically wound wire, each wire of the stent comprising at least two twisted strands, the twisted strands securing fibers between the twisted strands to form a fiber pile extending outwardly from the stent and extending inwardly into the stent to substantially occlude the inner bore of the stent.

5. (original) The endovascular stent of Claim 4 wherein the fibers are coated with at least a partially dehydrated hydrophilic polymeric gel.

Claims 6-15 (cancelled)

16. (previously presented) The endovascular stent according to Claim 1 wherein the fibers are coated with a pharmaceutically acceptable hydrophilic polymeric gel compatible with mammal body tissues and fluids.

17. (previously presented) The endovascular stent according to Claim 16 wherein the hydrophilic polymeric gel is partially dehydrated.

18. (previously presented) The endovascular stent according to Claim 16 wherein the hydrophilic polymeric gel is fully hydrated.

19. (previously presented) The endovascular stent according to Claim 17 wherein the partially dehydrated hydrophilic polymeric gel is adapted to be hydrated by body fluids.

20. (previously presented) The endovascular stent according to Claim 18 wherein the fully hydrated hydrophilic polymeric gel is adapted to be hydrated by body fluids.

21. (previously presented) The endovascular stent according to Claim 16 wherein the hydrophilic polymeric gel coats the fibers of the fiber pile.

22. (previously presented) The endovascular stent according to Claim 16 wherein the hydrophilic polymeric gel encapsulates the fiber pile.

23. (previously presented) The endovascular stent according to Claim 16 wherein one or more beads of the hydrophilic polymeric gel are attached to the fibers.

24. (previously presented) The endovascular stent according to Claim 16 wherein the hydrophilic polymeric gel is not soluble in the body tissues and fluids.

25. (previously presented) The endovascular stent according to Claim 1 wherein the fibers of the fiber pile are biocompatible fibers.

26. (previously presented) The endovascular stent according to Claim 1 wherein the stent is a self-expanding stent adapted to permanently expand from a first diameter to a larger second diameter.

27. (previously presented) The endovascular stent according to Claim 1 wherein the stent is expandable to permanently expand from a first diameter to a larger second diameter.

28. (previously presented) The endovascular stent according to Claim 1 wherein the fiber pile is adapted to form a foundation for tissue growth between the fiber pile and a surrounding lumenal wall of a vascular vessel when the stent is implanted in a patient.

29. (currently amended) The endovascular stent according to Claim 1 wherein the stent is made of a least two or more helically wound wires, each wire of the stent comprising at least two twisted strands, the twisted strands securing fibers <u>between the strands</u> to form a fiber pile extending outwardly from the stent.

30. (previously presented) The endovascular stent according to Claim 29 where at least one helically wound wire is wound in a first direction.

31. (previously presented) The endovascular stent according to Claim 30 wherein at least one other helically wound wire is wound in a second direction.

32. (previously presented) The endovascular stent according to Claim 31 wherein the helically wound wire is in one direction and the helically wound wire is in the other direction are interwoven to form an interweaving structure stent.

33. (previously presented) The endovascular stent according to Claim 31 wherein at least one of the helically wound wires crosses over and crosses under at least one other helically wound wire in a predetermined pattern.

34. (currently amended) An endovascular stent for a vascular vessel comprising a longitudinal stent having a circular configuration in cross section at any point longitudinal along its length, the stent adapted to be permanently expanded radially outward along its length, the stent made of least one helically wound wire, each wire of the stent comprising at least two twisted strands, the twisted strands securing fibers between the twisted strands to form a fiber pile extending outwardly from the stent.

35. (new) The endovascular stent of Claim 1 wherein the fiber pile extending outwardly from the stent extends radially outwardly.

36. (new) The endovascular stent of Claim 2 wherein the fiber pile extending inwardly into the stent extends radially inwardly.

37. (new) The endovascular stent of Claim 4 wherein the fiber pile extending outwardly from the stent extends radially outwardly.

38. (new) The endovascular stent of Claim 4 wherein the fiber pile extending inwardly into the stent extends radially inwardly.

39. (new) The endovascular stent of Claim 34 wherein the fiber pile extending outwardly from the stent extends radially outwardly.

REMARKS

Claims 1-5 and 16-39 are in the application. Claims 1, 4, 29, and 34 have been amended, and new Claims 35-39 have been added, and original Claims 6-15 have been cancelled without prejudice.

Claims 6-15 were withdrawn from consideration pursuant to an election made to the restriction requirement mailed on January 25, 2005. Applicant intends to file a divisional application to pick up the subject matter of the nonelected inventions.

Support of amended Claims 1, 29, and 34 is found on page 5, lines 25-31; and page 10, lines 19-30; and Figures 8, 9, and 10. Support for amended Claim 4 is found on page 5, lines 33-34; page 6, lines 1-9; page 10, lines 19-24; and Figures 5-7.

Support for new Claims 35-39 is found on page 5, lines 25-30; page 10, lines 10-30; Figures 6-7 (fiber pile 18A); and Figures 8-10 (fiber piles 18a and 18b).

It is submitted that the amended Claims 1, 4, 29, and 34, and the new Claims 35-39 are fully supported by the application as filed, and add no new matter to the application.

Amended Claims 1, 4, 29, and 34 specify that the twisted strands of each wire of the stent securing fibers forming the fabric pile <u>between the strands</u> as described in the specification and illustrated in the drawings, e.g. Figure 7.

Amended Claim 4 in addition specifies that the stent has a conical shape prior to and after expansion as described in the specification and illustrated in the drawings, e.g. Figure 5.

New Claims 35-39 are dependent upon Claims 1, 2, 4, and 34 and specify that the fabric pile extending outwardly in Claims 1, 2, and 34 extend <u>radially</u> outwardly and the fabric pile extending outwardly and inwardly in Claim 4 extends <u>radially</u> outwardly and inwardly.

It is submitted that the amended Claims 1, 4, 29, and 34, and the new Claims 35-39 do not necessitate a further search and should be entered.

Before discussing the rejections in detail, applicant wishes to point out that each claim specifies that the twisted strands of each helically wound wire of the stent secure fibers between the twisted strands to form a fiber pile extending outwardly from (and "inwardly into" in some claims) the stent. These features are not taught by any of the cited references and the references do not lend motivation to one ordinarily skilled in the art to alter the teachings of the references to obtain these features.

REJECTIONS

Claims 1, 2, 4, and 25-34 have been rejected under 35 U.S.C. 103(a) as being unpatentable over Callister et al. (6,432,116) in view of Anson et al. (6,432,134). The Action alleges that Callister et al., in Figs. 10-11, disclose a tubular stent made of at least one helically wound wire (at 11 and described as being braided in col. 7, lines 35-38) securing fibers (the strands which form layer 16 as described in col. 5, lines 45-64) **to form a fiber pile extending outwardly from the stent**. [emphasis added]

The above teaching in column 7 of Callister et al. is directed to a braided tube, i.e. tubular member 11 comprises a braided tube of wire or ribbon (col. 7, lines 37-38), and is not relevant to the patentability of applicant's claimed invention. Applicant's stent is not a braided tube. With regard to the allegation that Callister et al. discloses at least one helically wound wire securing fibers, applicant is unable to find such a disclosure in col. 5, lines 45-64, or elsewhere. That referenced section of Callister et al. teaches that "A mesh layer 16 is provided along at least a section of the outer surface and/or the inner surface of the tubular member... the mesh layer 16 comprises woven or bundled strands... which may be a single or plurality of mesh sheets as described above in connection with the mesh member 15" (col. 5, lines 55-59).

There is no teaching in Callister et al. to form a fiber pile extending outward (or inward) from the stent.

Referring to the top of column 5 of Callister et al., "In the embodiment illustrated in Fig. 1 [of Callister et al.], the mesh member 15 extends along the length of the tubular member 11 from the first end 12 to the second end 13 thereof. In another embodiment, illustrated in Fig. 5, the mesh member 15 is disposed in a plurality of sections intermittently spaced along the length of the tubular member. Fig. 6 illustrates another embodiment in which the mesh member 15 caps over the first end of the tubular member 11. In the embodiment illustrated in Fig. 6, the mesh member comprises a single sheet of woven material disposed in an end of the tubular member 11. Alternatively, a plurality of stacked woven mesh sheets may be provided including sheets having different mesh sizes. In the embodiments illustrated in Figs. 1, 5, and 6, the mesh member 15 is within the lumen of the tubular member. The mesh member may be connected to the tubular member by a variety of suitable means including adhesive, heat bonding or solvent bonding." (Callister et al., col. 5, lines 1-18).

With regard to the mesh member 15, Callister et al. teaches that "...the mesh member comprises intertwined strands of a biocompatible material connected to the tubular member 11. In the embodiment illustrated in Fig. 1, the mesh member comprises bundled strands. In the embodiment illustrated in Fig. 6, the mesh member comprises woven strands." (Callister et al., col. 4, lines 55-60)

The statement in the Action, "That Callister discloses securing fibers...to form a fiber pile extending outwardly from the stent." is completely unsupported. Nowhere within Callister et al. is there the slightest teaching of securing fibers to or in twisted strands of the helically wound wire to form a fiber pile extending outwardly from the stent as recited in applicant's claims. Mesh layer 16 of Callister et al., which comprises woven or bundled strands, is not a fiber pile.

Fiber piles are found on carpets and velvet and the fiber pile of the present invention is similar to carpet pile (see page 3, lines 29-30 of the application). Fiber piles have a velvety surface of fine hairs on various surfaces. Callister et al. not only does not disclose a stent with fiber piles, it fails to disclose a stent with fibers that extends outwardly from the stent.

The claims recite that each wire of the stent comprises at least two twisted strands. The Action admits that this feature is not taught by Callister et al. The Action recites that "...Anson et al. teach[s] that a wire which forms a stent should be made from at least two finer strands twisted together in order to obtain the advantage of providing greater mechanical strength (col. 7, lines 34-37 [Anson et al.]). It would have been obvious to form the Callister et al. wire (at 11) from at least two finer strands together so that it would too have this advantage."

Applicant respectfully traverses the Examiner's above conclusion. Even assuming for argument purposes that the combination argued by the Examiner would be made, the suggested combination of twisted strand wires still does not disclose or teach "securing fibers between the twisted strands of a stent wire to form a fiber pile extending outwardly [and/or inwardly] from the stent" so recited in the claims.

As to Claim 2, the Action states that Callister et al. discloses fibers (the fibers of layer 16 which also can extend inwardly into the stent as indicated in col. 5, lines 45-55) extending inwardly into the stent to substantially occlude the inner bore of the stent.

Col. 5, lines 45-55, Callister et al., states that:

> "In one embodiment, illustrated in Fig. 10, a mesh layer 16 is provided along at least a section of the outer surface and/or the inner surface of the tubular member, to facilitate tissue epithelialization along the tubular member 11 and into the mesh member 15. In the embodiment illustrated in Fig. 10, the mesh layer 16 is disposed along the entire length of the outer surface of the tubular

member and transversely disposed at the first end of the tubular member. The mesh layer may be integral extension of the mesh member 15 or a separate member connected to or separate from the mesh member 15."

This section does not disclose fibers or a fiber pile extending inwardly into, or outwardly from, the stent.

With regard to Claim 4, the Action recites that the stent of Callister et al. is generally conical-shaped in Figs. 18-19. Figs. 17, 18, and 19 are grouped together and discussed together by Callister et al. Callister et al. makes reference to Fig. 16, which shows insertion of the Callister et al. device in the fallopian tubes of a female patient, when discussing the device of Figs. 17-18. The contraceptive device of Figs. 17-19, is a tubular member 11 which has a cylindrical shape prior to insertion, placement and expansion (see Fig. 17). In Fig. 17, the cylindrical, not conical, stent is in its non-contracted state and has not been expanded. A balloon 38 is inserted into the lumen of the tubular member 11 and filled with liquid – a standard practice for expanding stents. The cylindrical stent with the balloon is inserted into the lumen of the fallopian tube using medical catheter techniques. When the stent has been positioned at the desired location by the physician, the balloon is expanded and a portion of the outer surface of the stent comes in contact with the inner surface of the fallopian tube (see Figs. 17-19 and the paragraph bridging cols. 6 and 7 of Callister et al.). The Callister et al. stent prior to expansion is not conical-shaped; the stent is cylindrical-shaped. Stents are described and claimed in their pre-expansion state. This is how they are manufactured, sold, and used, just as a bomb would be described and claimed in its pre-detonation state. Claim 4 as amended clearly specifies that this stent is in its pre-expanded state. Nowhere does Callister et al. disclose a conical stent in its pre-expanded state. In fact, Callister et al. teaches away from

using a stent with a section having a larger diameter than the other prior to the expansion step (see col. 6, lines 36-59).

Claims 3, 5, 16, and 20 are rejected also under 35 U.S.C. 103(a) as being unpatentably over Callister et al. (6,432,116) in view of Anson et al. (6,432,034) as applied to Claims 1 and 4 above and further in view of either Whitbounre (5,331,027) or Slaikeu et al. (5,443,907). The Action continues, "...It is old and well-known in this art to include such a gel on devices inserted into the body in order to obtain the advantage of making it slippery to facilitate such insertion. For example, Whitbounre (5,331,027) or Slaikeu et al. (5,443,907) each disclose this." This rejection concludes with a statement: "It would have been obvious to include such gel on the Callister et al. device so that it too would have this advantage."

Applicant cannot speak to whether it would have been obvious to include the gel on the Callister et al. device, but the applicant can clearly state that its claimed device is not disclosed by Callister et al., alone or in view of Anson et al., and in further view of either Whitbounre or Slaikeu et al. None of the references teach a stent having a fiber pile extending outwardly from the stent. In addition, they do not teach having the twisted strands of the stent wire securing fibers between the twisted strands to form a fiber pile. All the elements of the rejected Claims 3, 5, 16 and 24 are not disclosed by the references, and there is no motivation in any of the art to modify the references to meet all the claimed elements.

The Action addresses arguments made by the applicant in response to the first Action. Applicant argued and continues to argue that the fibers of the claimed invention are not woven to form a mesh as in Callister et al. In response to this point, the Action states that "Callister et al. teach that the strands can be bundled rather than woven (col. 4, lines 57-60, and col. 5, lines 55-56)". The above referenced lines of Callister et al. refer to bundled strands for the mesh member 15 and the mesh layer 16, not fiber pile comprising fibers that are secured by the

twisted strands of the helical wire. The fabric pile of the claimed invention is a key element. None of the references disclose a stent with a fabric pile.

The Action continues that: "In response to the argument near the bottom of page 2 of the response that fabric piles have depth, while fiber mesh is sheet-like and has relatively little depth, it is noted that the fibers of mesh 15 shown in Figs. 1-5, for example, clearly have significant depth and that the fibers forming layer 16 in Fig. 10 may be an extension of mesh member 15 (col. 5, lines 52-53)."

Callister never teaches that "the fibers forming layer 16 in Figure 10 may be an extension of the mesh member 15 at col. 5, lines 52-53 or elsewhere. The referenced lines are quoted above on page 9. With regard to Figure 4, Callister et al. states: "As illustrated in Fig. 4, showing a transverse cross section of the tubular member shown in Fig. 3 taken along lines 4-4, the mesh member 15 expands so that it extends across the expanded lumen 14 of the tubular member 11" (col. 4, lines 36-39). Fig. 3 is an elevational view of the occluding device shown in Fig. 1, in an expanded configuration (col. 3, lines 27-28). The description of Figs. 1-5 clearly teaches that 15 is a mesh member, not a fabric pile (col. 4, lines 31-49).

The fiber pile cannot be a mesh member because the fiber pile cannot expand so that it extends across the expanded lumen of the stent. The fibers of the fiber pile have a finite length and that length determines the depth of the pile. The fibers of the pile must have sufficient length before the stent lumen is expanded to bridge the expanded lumen of the stent.

There is absolutely no teaching in the drawings or specification of Callister et al. about fibers of fiber piles or about the fibers of fiber piles extending inwardly or outwardly.

The Action continues and states, "As to Claim 4, although the Callister et al. stent eventually becomes cylindrical upon full expansion, it is generally conical-shaped prior to full expansion as shown in Figs. 18-19. The claim [4] does not require the stent to be generally

conical-shaped upon full expansion." Claim 4 as amended does require the stent to be generally conical-shaped prior to and after expansion.

The Examiner referred the applicant to page 7, lines 25-30, of applicant's specification with regard to the arguments made in the first full paragraph of applicant's response to the first action on the merits. As to the sentence on lines 6-7 of the first full paragraph on page 6 of the Response to the Office Action mailed on April 26, 2007, applicant retracts the sentence which was overly broad. What applicant meant was that it is not well-known to place a gel on stents placed into the vascular system. Applicant congratulates the Examiner on his sharp eye.

Applicant respectfully submits that in light of the claims as amended, and currently in the application, and in view of the above remarks, the application is in condition for allowance, and the claims as amended are patentable over the four cited references identified in the Office Action and discussed above.

A favorable action is solicited.

Respectfully submitted,

Date: Oct. 18, 2007

William G. Lane
Registration No. 24,761

Correspondence Address:
WILLIAM G. LANE, INC., P.C.
16485 Laguna Canyon Road, #250
Irvine, California 92618
Telephone: 949-585-0348
Facsimile: 949-585-0494

PTO/SB/06 (07-06)
Approved for use through 1/31/2007. OMB 0651-0032
U.S. Patent and Trademark Office; U.S. DEPARTMENT OF COMMERCE
Under the Paperwork Reduction Act of 1995, no persons are required to respond to a collection of information unless it displays a valid OMB control number.

PATENT APPLICATION FEE DETERMINATION RECORD

Substitute for Form PTO-875

Application or Docket Number	Filing Date	☐ To be Mailed
10/018,164	05/20/2002	

APPLICATION AS FILED – PART I

FOR	(Column 1) NUMBER FILED	(Column 2) NUMBER EXTRA	SMALL ENTITY RATE ($)	SMALL ENTITY FEE ($)	OR	OTHER THAN SMALL ENTITY RATE ($)	OTHER THAN SMALL ENTITY FEE ($)
☐ BASIC FEE (37 CFR 1.16(a), (b), or (c))	N/A	N/A	N/A			N/A	
☐ SEARCH FEE (37 CFR 1.16(k), (i), or (m))	N/A	N/A	N/A			N/A	
☐ EXAMINATION FEE (37 CFR 1.16(o), (p), or (q))	N/A	N/A	N/A			N/A	
TOTAL CLAIMS (37 CFR 1.16(i))	minus 20 =	*	X $ =		OR	X $ =	
INDEPENDENT CLAIMS (37 CFR 1.16(h))	minus 3 =	*	X $ =			X $ =	
☐ APPLICATION SIZE FEE (37 CFR 1.16(s))	If the specification and drawings exceed 100 sheets of paper, the application size fee due is $250 ($125 for small entity) for each additional 50 sheets or fraction thereof. See 35 U.S.C. 41(a)(1)(G) and 37 CFR 1.16(s).						
☐ MULTIPLE DEPENDENT CLAIM PRESENT (37 CFR 1.16(j))							
* If the difference in column 1 is less than zero, enter "0" in column 2.			TOTAL			TOTAL	

APPLICATION AS AMENDED – PART II

AMENDMENT 10/23/2007

	(Column 1) CLAIMS REMAINING AFTER AMENDMENT		(Column 2) HIGHEST NUMBER PREVIOUSLY PAID FOR	(Column 3) PRESENT EXTRA	SMALL ENTITY RATE ($)	SMALL ENTITY ADDITIONAL FEE ($)	OR	OTHER THAN SMALL ENTITY RATE ($)	OTHER THAN SMALL ENTITY ADDITIONAL FEE ($)
Total (37 CFR 1.16(i))	* 29	Minus	** 34	= 0	X $ =		OR	X $50=	0
Independent (37 CFR 1.16(h))	* 3	Minus	***8	= 0	X $ =		OR	X $210=	0
☐ Application Size Fee (37 CFR 1.16(s))									
☐ FIRST PRESENTATION OF MULTIPLE DEPENDENT CLAIM (37 CFR 1.16(j))							OR		
					TOTAL ADD'L FEE		OR	TOTAL ADD'L FEE	0

AMENDMENT

	(Column 1) CLAIMS REMAINING AFTER AMENDMENT		(Column 2) HIGHEST NUMBER PREVIOUSLY PAID FOR	(Column 3) PRESENT EXTRA	SMALL ENTITY RATE ($)	SMALL ENTITY ADDITIONAL FEE ($)	OR	OTHER THAN SMALL ENTITY RATE ($)	OTHER THAN SMALL ENTITY ADDITIONAL FEE ($)
Total (37 CFR 1.16(i))	*	Minus	**	=	X $ =		OR	X $ =	
Independent (37 CFR 1.16(h))	*	Minus	***	=	X $ =		OR	X $ =	
☐ Application Size Fee (37 CFR 1.16(s))									
☐ FIRST PRESENTATION OF MULTIPLE DEPENDENT CLAIM (37 CFR 1.16(j))							OR		
					TOTAL ADD'L FEE		OR	TOTAL ADD'L FEE	

* If the entry in column 1 is less than the entry in column 2, write "0" in column 3.
** If the "Highest Number Previously Paid For" IN THIS SPACE is less than 20, enter "20".
*** If the "Highest Number Previously Paid For" IN THIS SPACE is less than 3, enter "3".
The "Highest Number Previously Paid For" (Total or Independent) is the highest number found in the appropriate box in column 1.

Legal Instrument Examiner:
dorretta brooks

This collection of information is required by 37 CFR 1.16. The information is required to obtain or retain a benefit by the public which is to file (and by the USPTO to process) an application. Confidentiality is governed by 35 U.S.C. 122 and 37 CFR 1.14. This collection is estimated to take 12 minutes to complete, including gathering, preparing, and submitting the completed application form to the USPTO. Time will vary depending upon the individual case. Any comments on the amount of time you require to complete this form and/or suggestions for reducing this burden, should be sent to the Chief Information Officer, U.S. Patent and Trademark Office, U.S. Department of Commerce, P.O. Box 1450, Alexandria, VA 22313-1450. DO NOT SEND FEES OR COMPLETED FORMS TO THIS ADDRESS. **SEND TO: Commissioner for Patents, P.O. Box 1450, Alexandria, VA 22313-1450.**
If you need assistance in completing the form, call 1-800-PTO-9199 and select option 2.

UNITED STATES PATENT AND TRADEMARK OFFICE

UNITED STATES DEPARTMENT OF COMMERCE
United States Patent and Trademark Office
Address: COMMISSIONER FOR PATENTS
P.O. Box 1450
Alexandria, Virginia 22313-1450
www.uspto.gov

APPLICATION NO.	FILING DATE	FIRST NAMED INVENTOR	ATTORNEY DOCKET NO.	CONFIRMATION NO.
10/018,164	05/20/2002	Timothy A.M. Chuter	C010-1001A-US	8768

. 7590 07/18/2007
William G Lane
16485 Lagna Canyon Road #250
Irvine, CA 92618

EXAMINER
THALER, MICHAEL H

ART UNIT	PAPER NUMBER
3731	

MAIL DATE	DELIVERY MODE
07/18/2007	PAPER

Please find below and/or attached an Office communication concerning this application or proceeding.

The time period for reply, if any, is set in the attached communication.

Office Action Summary	Application No.	Applicant(s)	
	10/018,164	CHUTER, TIMOTHY A.M.	
	Examiner	Art Unit	
	Michael Thaler	3731	

-- The MAILING DATE of this communication appears on the cover sheet with the correspondence address --

Period for Reply

A SHORTENED STATUTORY PERIOD FOR REPLY IS SET TO EXPIRE 3 MONTH(S) OR THIRTY (30) DAYS, WHICHEVER IS LONGER, FROM THE MAILING DATE OF THIS COMMUNICATION.

- Extensions of time may be available under the provisions of 37 CFR 1.136(a). In no event, however, may a reply be timely filed after SIX (6) MONTHS from the mailing date of this communication.
- If NO period for reply is specified above, the maximum statutory period will apply and will expire SIX (6) MONTHS from the mailing date of this communication.
- Failure to reply within the set or extended period for reply will, by statute, cause the application to become ABANDONED (35 U.S.C. § 133). Any reply received by the Office later than three months after the mailing date of this communication, even if timely filed, may reduce any earned patent term adjustment. See 37 CFR 1.704(b).

Status

1)☒ Responsive to communication(s) filed on *30 April 2007*.

2a)☒ This action is **FINAL**. 2b)☐ This action is non-final.

3)☐ Since this application is in condition for allowance except for formal matters, prosecution as to the merits is closed in accordance with the practice under *Ex parte Quayle*, 1935 C.D. 11, 453 O.G. 213.

Disposition of Claims

4)☒ Claim(s) *1-34* is/are pending in the application.

4a) Of the above claim(s) *6-15* is/are withdrawn from consideration.

5)☐ Claim(s) _____ is/are allowed.

6)☒ Claim(s) *1-5 and 16-34* is/are rejected.

7)☐ Claim(s) _____ is/are objected to.

8)☐ Claim(s) _____ are subject to restriction and/or election requirement.

Application Papers

9)☐ The specification is objected to by the Examiner.

10)☐ The drawing(s) filed on _____ is/are: a)☐ accepted or b)☐ objected to by the Examiner.

Applicant may not request that any objection to the drawing(s) be held in abeyance. See 37 CFR 1.85(a).

Replacement drawing sheet(s) including the correction is required if the drawing(s) is objected to. See 37 CFR 1.121(d).

11)☐ The oath or declaration is objected to by the Examiner. Note the attached Office Action or form PTO-152.

Priority under 35 U.S.C. § 119

12)☐ Acknowledgment is made of a claim for foreign priority under 35 U.S.C. § 119(a)-(d) or (f).

a)☐ All b)☐ Some * c)☐ None of:

1.☐ Certified copies of the priority documents have been received.

2.☐ Certified copies of the priority documents have been received in Application No. _____.

3.☐ Copies of the certified copies of the priority documents have been received in this National Stage application from the International Bureau (PCT Rule 17.2(a)).

* See the attached detailed Office action for a list of the certified copies not received.

Attachment(s)

1) ☐ Notice of References Cited (PTO-892)
2) ☐ Notice of Draftsperson's Patent Drawing Review (PTO-948)
3) ☐ Information Disclosure Statement(s) (PTO/SB/08) Paper No(s)/Mail Date _____.
4) ☐ Interview Summary (PTO-413) Paper No(s)/Mail Date. _____ .
5) ☐ Notice of Informal Patent Application
6) ☐ Other: _____.

Claims 6-15 are withdrawn from further consideration pursuant to 37 CFR 1.142(b), as being drawn to a nonelected species, there being no allowable generic or linking claim. Applicant timely traversed the restriction (election) requirement in the reply filed on May 31, 2005.

Claims 1, 2, 4 and 25-34 are rejected under 35 U.S.C. 103(a) as being unpatentable over Callister et al. (6,432,116) in view of Anson et al. (6,432,134). Callister et al., in figures 10-11, disclose a tubular stent made of at least one helically wound wire (at 11 and described as being braided in col. 7, lines 35-38) securing fibers (the strands which form layer 16 as described in col. 5, lines 45-64) to form a fiber pile extending outwardly from the stent. Callister et al. fail to disclose the wire as comprising at least two twisted strands. However, Anson et al. teach that a wire which forms a stent should be made from at least two finer strands twisted together in order to obtain the advantage of providing greater mechanical strength (col. 7, lines 34-37). It would have been obvious to form the Callister et al. wire (at 11) from at least two finer strands twisted together so that it too would have this advantage. As claim 2, Callister et al. disclose fibers (the fibers of layer 16 which can also extend inwardly into the stent as indicated in col. 5, lines 45-55) extending inwardly into the

stent to substantially occlude the inner bore of the stent. As to claim 4, the Callister et al. stent is generally conical-shaped in figures 18-19.

Claims 3, 5 and 16-24 are rejected under 35 U.S.C. 103(a) as being unpatentable over Callister et al. (6,432,116) in view of Anson et al. (6,432,134) as applied to claims 1 and 4 above, and further in view of either Whitbounre (5,331,027) or Slaikeu et al. (5,443,907). Callister et al. fail to disclose a hydrophilic polymeric gel. However, it is old and well known in this art to include such a gel on devices inserted into the body in order to obtain the advantage of making them slippery to facilitate such insertion. For example, Whitbounre (5,331,027) or Slaikeu et al. each disclose this. It would have been obvious to include such gel on the Callister et al. device so that it too would have this advantage.

Applicant's arguments filed April 30, 2007 have been fully considered but they are not persuasive. In response to the argument near the bottom of page 2 of the response that fibers of the fabric pile are not woven together to form a mesh, it is noted that Callister et al. teach that the strands can be bundled rather than woven (col. 4, lines 57-60 and col. 5, lines 55-56). In response to the argument near the bottom of page 2 of the response that fabric piles have depth while fiber mesh is

sheet-like and has relatively little depth, it is noted that the fibers of mesh 15 shown in figures 1-5, for example, clearly have significant depth and that the fibers forming layer 16 in figure 10 may be an extension of the mesh member 15 (col. 5, lines 52-53. As to claim 4, although the Callister et al. stent eventually becomes cylindrical upon full expansion, it is generally conical-shaped prior to full expansion as shown figures 18-19. The claim does not require the stent to be generally conical-shaped upon full expansion. As to the arguments on page 6 of the response regarding the gel, note page 7, lines 25-30 of applicant's specification.

Any inquiry concerning this communication or earlier communications from the examiner should be directed to Michael Thaler whose telephone number is (571) 272-4704. The examiner can normally be reached Monday to Friday.

If attempts to reach the examiner by telephone are unsuccessful, the examiner's supervisor, Anhtuan T. Nguyen can be reached on (571) 272-4963. The fax phone number for the organization where this application or proceeding is assigned is (571) 273-8300.

MICHAEL THALER
PRIMARY EXAMINER
ART UNIT 3731

mht

Search Notes	Application/Control No.	Applicant(s)/Patent under Reexamination
	10/018,164	CHUTER, TIMOTHY A.M.
	Examiner	Art Unit
	Michael Thaler	3731

SEARCHED			
Class	Subclass	Date	Examiner
623	1.15		
	1.22		
	200	10/26/2006	MT
updated		7-11-07	W

INTERFERENCE SEARCHED			
Class	Subclass	Date	Examiner

SEARCH NOTES (INCLUDING SEARCH STRATEGY)		
	DATE	EXMR
EAST TEXT SEARCH. SEE PRINTOUT.	10/26/2006	MT

OIPE
APR 30 2007
PATENT & TRADEMARK OFFICE

Attorney Docket: C010-1001A-US

IN THE UNITED STATES PATENT AND TRADEMARK OFFICE

Applicant:	Timothy A.M. Chuter	Examiner:	Michael H. Thaler
Serial No.:	10/018,164	Art Unit:	3731
Date Filed:	May 20, 2002		
For:	LARGE VESSEL STENTS AND OCCLUDERS		

Mail Stop Amendment
Commissioner for Patents
P.O. Box 1450
Alexandria, VA 22313-1450

Certificate of Mailing

I hereby certify that this document, together with any described as being attached or enclosed, is being deposited with the United States Postal Service as first class mail, postage fully prepaid, addressed to Commissioner for Patents, P.O. Box 1450, Alexandria, VA 22313-1450 on APRIL 26, 2007

Executed on 4/26/07 Maureen Vieira
Maureen Vieira

RESPONSE TO OFFICE ACTION

Sir:

This communication is filed in response to the Office Action mailed on October 30, 2006. A three-month extension of time is requested, until April 30, 2007; the fee of $510.00 for a small entity is attached hereto.

REMARKS

Claims 1-5 and 16-34 are in the application. Claims 6-15 have been withdrawn from consideration.

THE CLAIMED INVENTION

The claims of the present invention are directed endovascular stents for maintaining vascular patency in humans and animals and endovascular stents for occluding vascular members in humans and animals. The vessels of the vascular system in humans and animals form a complex system and the vessels bend and curve through the body and healthy vessels have a generally circular shape. However, the cross section of non-healthy vessels for a variety

05/01/2007 CCHAU1 00000023 10018164
01 FC:2253 510.00 OP

of reasons can be far from the idealized cross section area. With age and disease, the shape of the vessels deviate from a circular in cross section. Unfortunately, it is the older population that have unhealthy vessels due to aging and disease that require the use of stents, both as grafts for maintaining vascular patency and for occluding vascular members. In many cases, the traditional graft and stent cannot be used in vessels with highly irregular-shaped cross sections because they do not completely seal around the circumference of the stent with the vessel, leaving voids which can cause leaks or which can receive blood which will coagulate which can cause other problems and complications. The present invention is directed to stent grafts and stent occluders that can address the problem of vessels with irregular cross sections. The stents of the claims have the ability to form a seal completely around the circumference of the stent inner circumference wall of the vessel.

For the graft stent this is accomplished by incorporating a fabric pile on the outside of the stent with the individual fibers extending radially outward. When the stent is placed in the vessel and expanded, the fibers will be depressed as required to fit the internal shape of the wall of diseased, aged or damaged vessel. Similarly, stent occluder has a fabric pile extending both radially outward and radially inward. The radially outward extending pile performs the same function as for the stent graft of the present invention. The inwardly extending pile forms a matrix for blood to coagulate on and to form a sealed wall which seals off the vessel. The sealed wall of the coagulated blood encourages tissue growth, and with tissue growth, the vessel is permanently sealed off. A fabric pile is not a mesh. In other words, the fibers of the fabric pile are not woven together to form a mesh, but rather they are like the pile of a rug, with the individual fibers extending to the surface of the rug or the pile. Fabric piles have depth; fiber mesh is sheet-like and has relatively little depth.

THE CLAIM REJECTION

THE CLAIMS

Claims 1-5 and 16-34 have been rejected under 35 USC 103(a) as being unpatentable over Callister et al. (US 6,432,116) in view of Anson et al. (US 6,432,134). The basis for the rejection is set forth on pages 2-4 of the Office Action and will not be repeated herein.

Claim 1 is directed to an endovascular stent which can permanently expanded from a first diameter to a larger second diameter. The stent is made up of at least one helically wound wire, each wire of the stent comprising at least two twisted strands. The twisted strands securing fibers to form a fiber pile extending outwardly from the stent.

Claim 2 which is dependent upon Claim 1 provides that the twisted strands also secure fibers to form a fiber pile extending inward into the stent to substantially occlude the inner bore of the stent.

Claim 3 which is dependent upon Claim 1 provides that the fibers are coated with at least a partially dehydrated hydrophilic polymeric gel.

Independent Claim 4 is directed to an endovascular stent for occluding the lumen of a vascular vessel comprising a general conical-shaped stent member having a firs large diameter at one end and a small diameter at the opposing end, the stent adapted to permanently expand the first large diameter to a larger diameter. The stent is made of at least one helically wound wire. Each wire of the stent comprises at least two twisted strands. The twisted strands secure fibers to form a fiber pile extending outwardly from the stent and extending inwardly into the stent to substantially occlude the inner bore of the stent.

Claim 5 is similar to Claim 3 but dependent upon Claim 4.

Claim 16 is dependent upon Claim 1 and provides that the fibers are coated with a pharmaceutically acceptable hydrophilic polymeric gel compatible with mammal body tissues and fluids.

Claims 17-24 are dependent upon Claim 16 and deal with other embodiments of the hydrophilic polymeric gel.

Claim 25 which is dependent upon Claim 1 specifies that the fibers of fiber pile are biocompatible fibers.

Claim 26 specifies the self-expanding stent.

Claim 27 which is dependent upon Claim 1 specifies that the stent is expandable to permanently expand from a first diameter to second diameter.

Claim 28 is dependent upon Claim 1 and provides that the fiber pile is adapted to form a foundation for tissue growth between the fiber pile and a surrounding lumenal wall of a vascular vessel when the stent is implanted in a patient.

Claims 29-33 are directed to endovascular stent where the stent is made up of at least two or more helically wound wires.

Claim 34 is directed to an endovascular stent comprising a longitudinal stent having a circular configuration in cross section at any point along its length, the stent adapted to be permanently expanded radially outward along its length. The stent is made of at least one helically wound wire. Each wire of the stent comprising at least two twisted strands, the twisted strands securing fibers to form a fiber pile extending outwardly from the stent.

Applicant respectfully traverses the rejection of the claims.

THE CITED PRIOR ART

Callister et al. is directed to a stent for occluding vessels especially occluding vessels for sterilization. It alleged in the Office Action that Callister discloses a tubular stent made of at least one helically wound wire which can be braided for securing fibers to form a fiber mesh layer 16 extending along the outer surface and/or inner surface of the stent. There is no disclosure or suggestion in the Callister that the mesh layer 16 or mesh member 15 is a fiber pile or that it is beneficial to have a fiber pile on the outside or inside of the occluders. The Action admits that Callister et al. fails to disclose the wires comprising at least two twisted strands. The Action relies on Anson et al. to teach that a wire which forms a stent should be made from at least two finer strands twisted together in order to obtain the advantage of providing greater mechanical strength. Anson does not teach or suggest utilizing two twisted strands to secure fibers for a fiber pile. Even it the wires of the stent of Callister were made from at least two finer strands twisted together, there is still no teaching between the two references of having a covering of fiber pile or having the twisted strands secure fibers in forming a fiber pile extending outwardly or inwardly in the stent.

The Action alleges that Callister et al. discloses fibers (the strands which form layer 16 as described in col. 5, line 64) to form a fiber pile extending outwardly from the stent. The mesh member 15 and mesh layer 16 of Callister is discussed in detail in column 5, lines 29-64. Nowhere within this detailed discussion is there any suggestion or teaching of utilizing or forming a fiber pile. A fiber pile as explained above can be adapted to close off the inner circumference of a lumen that has extremely irregular surface because of disease, or damage, or age. A mesh does not have that same ability. A mesh is like a piece of cloth or sheet. In column 5 in the paragraph referenced in the Office Action, it is taught that the "mesh layer 16 comprises woven or bundled strands of a, preferably, biocompatible material which may be a

single or plurality of mesh sheets as discussed above in connection with mesh member 15." Callister fails to teach the utilization of a fiber pile, and Anson et al. fails to teach the use of a fabric pile.

The Office Action admits that Callister et al. fails to disclose a hydrophilic polymeric gel. However, the Action contends that it is old and well-known in the art to include such a gel on devices inserted into the body in order to obtain the advantage of making them slippery to facilitate such insertion. Applicant does not deny that it is well-known in the art to coat certain instruments with gels for insertion into the body cavities, such as the throat, the rectum, into the urethra, nasal passages, and the like. It is not old and well-known in the art to place a gel on devices inserted into the vascular system. Applicant requests a reference showing that is old and well-known to place a hydrophilic polymeric gel on a device inserted into the vascular system.

With regard to Claim 14, the Office Action points out that Callister et al. discloses a stent in Figures 18-19 that is generally conical-shaped. The stent of Figure 18 and 19 is discussed on the last line in column 6 and in the top two paragraphs in column 7 of Callister. The stent of Figures 18 and 19 is the same stent. In Figure 18, a section of the tubular member 11 extending from the second end of the tubular member is expanded into contact with the wall of the fallopian tube 42. Callister discloses a cylindrical stent that has one end expanded leaving the other end unexpanded to form a semi-conical shape. Claim 4 is directed to an conical vascular stent that has a conical shape prior to expansion and after expansion Callister does not disclose such a stent and does not suggest such a stent.

The elements of the remaining claims 5, 16-34, which have not been attacked individually in the Office Action, all disclose elements that disclosed neither by Callister or

Anson. The stents of the claims of the present invention are directed to overcome a problem that neither Callister et al. or Anson et al. were directed to.

It is respectfully submitted that, in light of the above remarks, Claims 1-5 and 16-34 of the present invention are patentable and the application should pass to issuance. A favorable action is solicited.

If the Examiner has any questions regarding this response or has any suggestions regarding amendments to the claims, the Examiner is respectfully requested to call the undersigned.

Respectfully submitted,

Date: April 25, 2007

William G. Lane
Registration No. 24,761

Correspondence Address:
WILLIAM G. LANE, INC., P.C.
16485 Laguna Canyon Road, #250
Irvine, California 92618
Telephone: 949-585-0348
Facsimile: 949-585-0494

OIPE
APR 30 2007
PATENT & TRADEMARK OFFICE

IFW

Attorney Docket: C010-1001A-US 3731

IN THE UNITED STATES PATENT AND TRADEMARK OFFICE

Applicant:	Timothy A.M. Chuter	Examiner:	Michael Thaler
Serial No.:	10/018,164	Art Unit:	3731
Date Filed:	May 20, 2002		
For:	LARGE VESSEL STENTS AND OCCLUDERS		

Mail Stop Amendment
Commissioner for Patents
P.O. Box 1450
Alexandria, VA 22313-1450

Certificate of Mailing

I hereby certify that this document, together with any described as being attached or enclosed, is being deposited with the United States Postal Service as first class mail, postage fully prepaid, addressed to Commissioner for Patents, P.O. Box 1450, Alexandria, VA 22313-1450 on APRIL 26, 2007.

Executed on 4/26/07 Maureen Vieira
Maureen Vieira

TRANSMITTAL AND REQUEST FOR THREE-MONTH EXTENSION OF TIME

Sir:

The following documents are enclosed in connection with applicant's response to the Office Action dated October 30, 2006. A three-month extension of time is requested until April 30, 2007.

Response to Office Action;

Check No. 5800 in the amount of $510 for the extension fee;

Certificate of Mailing; and

Post card.

The fees for claims and the extension have been calculated as follows for a small entity:

	Claims Remaining	Highest No. Previously Paid	No. Extra	Rate	Additional Fee Due
Total Claims	24	34		x $ 25 =	$ -0-
Total Independent Claims	3	8		x $100=	-0-
	Total for Claims				$ -0-
	3-Month Extension Fee				510.00
	TOTAL DUE				$510.00

Respectfully submitted,

Date: April 25, 2007

William G. Lane, Registration No. 24,761

Correspondence Address:
WILLIAM G. LANE, INC., P.C.
16485 Laguna Canyon Road, #250
Irvine, California 92618
Tel. 949-585-0348
Fax. 949-585-0494

BEST AVAILABLE COPY

Application or Docket Number 10/018164

PATENT APPLICATION FEE DETERMINATION RECORD
Effective October 1, 2001

CLAIMS AS FILED - PART I

	(Column 1)	(Column 2)
TOTAL CLAIMS		
FOR	NUMBER FILED	NUMBER EXTRA
TOTAL CHARGEABLE CLAIMS	15 minus 20=	* —
INDEPENDENT CLAIMS	7 minus 3 =	* 4
MULTIPLE DEPENDENT CLAIM PRESENT		☐

* If the difference in column 1 is less than zero, enter "0" in column 2

SMALL ENTITY TYPE ☐	RATE	FEE		OTHER THAN SMALL ENTITY	RATE	FEE
	BASIC FEE		OR		BASIC FEE	740
	X$ 9=		OR		X$18=	
	X42=		OR		X84=	336
	+140=		OR		+280=	
	TOTAL		OR		TOTAL	

CLAIMS AS AMENDED - PART II

5/31/05

AMENDMENT A

	(Column 1) CLAIMS REMAINING AFTER AMENDMENT		(Column 2) HIGHEST NUMBER PREVIOUSLY PAID FOR	(Column 3) PRESENT EXTRA
Total	* 34	Minus	** 20	= 14
Independent	* 8	Minus	*** 7	= 1
FIRST PRESENTATION OF MULTIPLE DEPENDENT CLAIM				☐

SMALL ENTITY	RATE	ADDITIONAL FEE		OTHER THAN SMALL ENTITY	RATE	ADDITIONAL FEE
	~~X$ 8=~~ 25	350	OR		~~X$16=~~ 50	
	~~X42=~~ 100	100	OR		~~X84=~~ 200	
	+140=		OR		+280=	
	TOTAL ADDIT. FEE	450	OR		TOTAL ADDIT. FEE	

Paid

4/30/07

AMENDMENT B

	(Column 1) CLAIMS REMAINING AFTER AMENDMENT		(Column 2) HIGHEST NUMBER PREVIOUSLY PAID FOR	(Column 3) PRESENT EXTRA
Total	* 34	Minus	** 34	=
Independent	* 8	Minus	*** 8	=
FIRST PRESENTATION OF MULTIPLE DEPENDENT CLAIM				☐

	RATE	ADDITIONAL FEE			RATE	ADDITIONAL FEE
	X$ 9=		OR		X$18=	
	X42=		OR		X84=	
	+140=		OR		+280=	
	TOTAL ADDIT. FEE		OR		TOTAL ADDIT. FEE	

AMENDMENT C

	(Column 1) CLAIMS REMAINING AFTER AMENDMENT		(Column 2) HIGHEST NUMBER PREVIOUSLY PAID FOR	(Column 3) PRESENT EXTRA
Total	*	Minus	**	=
Independent	*	Minus	***	=
FIRST PRESENTATION OF MULTIPLE DEPENDENT CLAIM				☐

	RATE	ADDITIONAL FEE			RATE	ADDITIONAL FEE
	X$ 9=		OR		X$18=	
	X42=		OR		X84=	
	+140=		OR		+280=	
	TOTAL ADDIT. FEE		OR		TOTAL ADDIT. FEE	

* If the entry in column 1 is less than the entry in column 2, write "0" in column 3.
** If the "Highest Number Previously Paid For" IN THIS SPACE is less than 20, enter "20."
***If the "Highest Number Previously Paid For" IN THIS SPACE is less than 3, enter "3."
The "Highest Number Previously Paid For" (Total or Independent) is the highest number found in the appropriate box in column 1.

FORM PTO-875 (Rev. 8/01)

Patent and Trademark Office, U.S. DEPARTMENT OF COMMERCE

UNITED STATES PATENT AND TRADEMARK OFFICE

UNITED STATES DEPARTMENT OF COMMERCE
United States Patent and Trademark Office
Address: COMMISSIONER FOR PATENTS
P.O. Box 1450
Alexandria, Virginia 22313-1450
www.uspto.gov

APPLICATION NO.	FILING DATE	FIRST NAMED INVENTOR	ATTORNEY DOCKET NO.	CONFIRMATION NO.
10/018,164	05/20/2002	Timothy A.M. Chuter	C010-1001A-US	8768

7590 10/30/2006

William G Lane
16485 Lagna Canyon Road #250
Irvine, CA 92618

EXAMINER
THALER, MICHAEL H

ART UNIT	PAPER NUMBER
3731	

DATE MAILED: 10/30/2006

Please find below and/or attached an Office communication concerning this application or proceeding.

Office Action Summary	Application No.	Applicant(s)	
	10/018,164	CHUTER, TIMOTHY A.M.	
	Examiner	Art Unit	
	Michael Thaler	3731	

-- The MAILING DATE of this communication appears on the cover sheet with the correspondence address --

Period for Reply

A SHORTENED STATUTORY PERIOD FOR REPLY IS SET TO EXPIRE 3 MONTH(S) OR THIRTY (30) DAYS, WHICHEVER IS LONGER, FROM THE MAILING DATE OF THIS COMMUNICATION.

- Extensions of time may be available under the provisions of 37 CFR 1.136(a). In no event, however, may a reply be timely filed after SIX (6) MONTHS from the mailing date of this communication.
- If NO period for reply is specified above, the maximum statutory period will apply and will expire SIX (6) MONTHS from the mailing date of this communication.
- Failure to reply within the set or extended period for reply will, by statute, cause the application to become ABANDONED (35 U.S.C. § 133). Any reply received by the Office later than three months after the mailing date of this communication, even if timely filed, may reduce any earned patent term adjustment. See 37 CFR 1.704(b).

Status

1)☒ Responsive to communication(s) filed on *31 May 2005*.

2a)☐ This action is **FINAL**. 2b)☒ This action is non-final.

3)☐ Since this application is in condition for allowance except for formal matters, prosecution as to the merits is closed in accordance with the practice under *Ex parte Quayle*, 1935 C.D. 11, 453 O.G. 213.

Disposition of Claims

4)☒ Claim(s) *1-34* is/are pending in the application.

4a) Of the above claim(s) *6-15* is/are withdrawn from consideration.

5)☐ Claim(s) _____ is/are allowed.

6)☒ Claim(s) *1-5 and 16-34* is/are rejected.

7)☐ Claim(s) _____ is/are objected to.

8)☐ Claim(s) _____ are subject to restriction and/or election requirement.

Application Papers

9)☐ The specification is objected to by the Examiner.

10)☐ The drawing(s) filed on _____ is/are: a)☐ accepted or b)☐ objected to by the Examiner.

Applicant may not request that any objection to the drawing(s) be held in abeyance. See 37 CFR 1.85(a).

Replacement drawing sheet(s) including the correction is required if the drawing(s) is objected to. See 37 CFR 1.121(d).

11)☐ The oath or declaration is objected to by the Examiner. Note the attached Office Action or form PTO-152.

Priority under 35 U.S.C. § 119

12)☐ Acknowledgment is made of a claim for foreign priority under 35 U.S.C. § 119(a)-(d) or (f).

a)☐ All b)☐ Some * c)☐ None of:

1.☐ Certified copies of the priority documents have been received.

2.☐ Certified copies of the priority documents have been received in Application No. _____.

3.☐ Copies of the certified copies of the priority documents have been received in this National Stage application from the International Bureau (PCT Rule 17.2(a)).

* See the attached detailed Office action for a list of the certified copies not received.

Attachment(s)

1) ☒ Notice of References Cited (PTO-892)
2) ☐ Notice of Draftsperson's Patent Drawing Review (PTO-948)
3) ☐ Information Disclosure Statement(s) (PTO/SB/08) Paper No(s)/Mail Date _____.
4) ☐ Interview Summary (PTO-413) Paper No(s)/Mail Date. _____ .
5) ☐ Notice of Informal Patent Application
6) ☐ Other: _____.

Aortic Innovations, LLC, Exhibit 2126
Page 2126 - 184
IPR2023-01325, Edwards Lifesciences Corp. et al v. Aortic Innovations, LLC

Applicant's election with traverse of the species of figures 8-10 in the reply filed on May 31, 2005 is acknowledged. The only traversal is on the ground(s) that figures 5-7 should be included with figures 8-10 to form one species. Upon reconsideration, this is agreed to. Therefore, claims 4 and 5 which are drawn to the embodiment of figures 5-7 will be examined on the merits. The requirement itself is still deemed proper and is therefore made FINAL.

Claims 6-15 are withdrawn from further consideration pursuant to 37 CFR 1.142(b), as being drawn to a nonelected species, there being no allowable generic or linking claim. Applicant timely traversed the restriction (election) requirement in the reply filed on May 31, 2005.

The following is a quotation of 35 U.S.C. 103(a) which forms the basis for all obviousness rejections set forth in this Office action:

> (a) A patent may not be obtained though the invention is not identically disclosed or described as set forth in section 102 of this title, if the differences between the subject matter sought to be patented and the prior art are such that the subject matter as a whole would have been obvious at the time the invention was made to a person having ordinary skill in the art to which said subject matter pertains. Patentability shall not be negatived by the manner in which the invention was made.

Claims 1-5 and 16-34 are rejected under 35 U.S.C. 103(a) as being unpatentable over Callister et al. (6,432,116) in view of Anson et al. (6,432,134). Callister et al., in figure 10,

disclose a tubular stent made of at least one helically wound wire (at 11 and described as being braided in col. 7, lines 35-38) securing fibers (the strands which form layer 16 as described in col. 5, lines 64) to form a fiber pile extending outwardly from the stent. Callister et al. fail to disclose the wire as comprising at least two twisted strands. However, Anson et al. teach that a wire which forms a stent should be made from at least two finer strands twisted together in order to obtain the advantage of providing greater mechanical strength (col. 7, lines 34-37). It would have been obvious to form the Callister et al. wire (at 11) from at least two finer strands twisted together so that it too would have this advantage. As claim 2, Callister et al. disclose fibers (the fibers of layer 16 which can also extend inwardly into the stent as indicated in col. 5, lines 45-55) extending inwardly into the stent to substantially occlude the inner bore of the stent. As to claim 3, Callister et al. fail to disclose a hydrophilic polymeric gel. However, it is old and well known in this art to include such a gel on devices inserted into the body in order to obtain the advantage of making them slippery to facilitate such insertion. It would have been obvious to include such gel on the Callister et al. device so that it too would have this advantage. As to claim 4,

the Callister et al. stent is generally conical-shaped in figures 18-19.

The prior art made of record and not relied upon is considered pertinent to applicant's disclosure.

Any inquiry concerning this communication or earlier communications from the examiner should be directed to Michael Thaler whose telephone number is (571) 272-4704. The examiner can normally be reached Monday to Friday.

If attempts to reach the examiner by telephone are unsuccessful, the examiner's supervisor, Anhtuan T. Nguyen can be reached on (571) 272-4963. The fax phone number for the organization where this application or proceeding is assigned is (571) 273-8300.

MICHAEL THALER
PRIMARY EXAMINER
ART UNIT 3731

mht

Notice of References Cited	Application/Control No. 10/018,164	Applicant(s)/Patent Under Reexamination CHUTER, TIMOTHY A.M.	
	Examiner Michael Thaler	Art Unit 3731	Page 1 of 1

U.S. PATENT DOCUMENTS

*		Document Number Country Code-Number-Kind Code	Date MM-YYYY	Name	Classification
*	A	US-5,256,146	10-1993	Ensminger et al.	604/104
*	B	US-6,358,228	03-2002	Tubman et al.	604/104
*	C	US-7,108,716	09-2006	Burnside et al.	623/1.38
*	D	US-6,090,125	07-2000	Horton, Joseph A.	606/191
*	E	US-5,423,849	06-1995	Engelson et al.	606/191
*	F	US-6,280,457	08-2001	Wallace et al.	606/200
*	G	US-6,432,116	08-2002	Callister et al.	606/157
*	H	US-6,432,134	08-2002	Anson et al.	623/1.19
	I	US-			
	J	US-			
	K	US-			
	L	US-			
	M	US-			

FOREIGN PATENT DOCUMENTS

*		Document Number Country Code-Number-Kind Code	Date MM-YYYY	Country	Name	Classification
	N					
	O					
	P					
	Q					
	R					
	S					
	T					

NON-PATENT DOCUMENTS

*		Include as applicable: Author, Title Date, Publisher, Edition or Volume, Pertinent Pages)
	U	
	V	
	W	
	X	

*A copy of this reference is not being furnished with this Office action. (See MPEP § 707.05(a).)
Dates in MM-YYYY format are publication dates. Classifications may be US or foreign.

Search Notes	Application/Control No.	Applicant(s)/Patent under Reexamination	
	10/018,164	CHUTER, TIMOTHY A.M.	
	Examiner	Art Unit	
	Michael Thaler	3731	

SEARCHED			
Class	Subclass	Date	Examiner
623	1.15		
	1.22		
	200	10/26/2006	MT

INTERFERENCE SEARCHED			
Class	Subclass	Date	Examiner

SEARCH NOTES (INCLUDING SEARCH STRATEGY)		
	DATE	EXMR
EAST TEXT SEARCH. SEE PRINTOUT.	10/26/2006	MT

EAST Search History

Ref #	Hits	Search Query	DBs	Default Operator	Plurals	Time Stamp
S31	22616	stent	US-PGPUB; USPAT	OR	ON	2006/10/25 13:52
S32	215163	twist$	US-PGPUB; USPAT	OR	ON	2006/10/25 13:52
S33	604	S31 WITH S32	US-PGPUB; USPAT	OR	ON	2006/10/25 14:15

OIPE IAP21
APR 10 2006
PATENT & TRADEMARK OFFICE

TPW 3731

Attorney Docket: C010-1001A-US

IN THE UNITED STATES PATENT AND TRADEMARK OFFICE

Applicants:	Timothy A.M. Chuter	Examiner:	Michael H. Thaler
Serial No.:	10/018,164	Art Unit:	3731
Date Filed:	05/20/2002		
For:	LARGE VESSEL STENTS AND OCCLUDERS		

Commissioner for Patents
P. O. Box 1450
Alexandria, VA 22313-1450

Certificate of Mailing

I hereby certify that this document, together with any described as being attached or enclosed, is being deposited with the United States Postal Service as first class mail, postage fully prepaid, addressed to Commissioner for Patents, P.O. Box 1450, Alexandria, VA 22313-1450 on APRIL 7, 2006

Dated: 4/7/06 Maureen Vieira
Maureen Vieira

STATUS INQUIRY

Sir:

Please advise the status of the above-identified patent application.

Respectfully requested,

Date: March 6, 2006

William G. Lane
Registration No. 24,761

Correspondence Address:
WILLIAM G. LANE, INC., P.C.
16485 Laguna Canyon Road, #250
Irvine, California 92618
Tel. 949-585-0348
Fax. 949-585-0494

3731

OIPE JC106
MAY 31 2005
PATENT & TRADEMARK OFFICE

Attorney Docket: C010-1001A-US

IN THE UNITED STATES PATENT AND TRADEMARK OFFICE

Applicant:	Timothy A.M. Chuter	Examiner:	Michael Thaler
Serial No.:	10/018,164	Art Unit:	3731
Date Filed:	May 20, 2002		
For:	LARGE VESSEL STENTS AND OCCLUDERS		

Mail Stop Amendment
Commissioner for Patents
P.O. Box 1450
Alexandria, VA 22313-1450

Certificate of Mailing

I hereby certify that this document, together with any described as being attached or enclosed, is being deposited with the United States Postal Service as first class mail, postage fully prepaid, addressed to Commissioner for Patents, P.O. Box 1450, Alexandria, VA 22313-1450 on MAY 25, 2005.

Executed on 5/25/05 Maureen Vieira
Maureen Vieira

RESPONSE TO
NOTICE OF NON-COMPLIANT AMENDMENT

Sir:

This amendment is filed in response to the Notice mailed on May 10, 2005.

Original Claims 1-15 remain in the application. Claims 16-34 which are set forth below are added to the application.

CLAIMS LISTING

1. (original) An endovascular stent for a vascular vessel comprising a generally tubular stent adapted to permanently expand from a first diameter to a larger second diameter, the stent made of at least one helically wound wire, each wire of the stent comprising at least two twisted strands, the twisted strands securing fibers to form a fiber pile extending outwardly from the stent.

2. (original) The endovascular stent according to Claim 1 wherein the twisted strands also securing fibers to form a fiber pile extending inwardly into the stent to substantially occlude the inner bore of the stent.

3. (original) The endovascular stent of Claim 1 wherein the fibers are coated with at least a partially dehydrated hydrophilic polymeric gel.

4. (original) An endovascular stent for occluding the lumen of a vascular vessel comprising a generally conical-shaped stent member having a first large diameter at one end and a small diameter at the opposing end, the stent adapted to permanently expand the first large diameter to a larger diameter, the stent made of at least one helically wound wire, each wire of the stent comprising at least two twisted strands, the twisted strands securing fibers to form a fiber pile extending outwardly from the stent and extending inwardly into the stent to substantially occlude the inner bore of the stent.

5. (original) The endovascular stent of Claim 4 wherein the fibers are coated with at least a partially dehydrated hydrophilic polymeric gel.

6. (original) An endovascular stent for occluding a lumen of a vascular vessel comprising a generally umbrella-shaped member having a plurality of radially wire ribs joined together at one of their ends and biased to extend radially outwardly and downwardly, each rib comprising of at least two twisted strands, the twisted strands securing fibers which extend outwardly from the wire ribs to form a fiber pile.

7. (original) The endovascular stent according to Claim 6 wherein the twisted strands also secure fibers which extend inwardly from the wire ribs to substantially occlude the inner bore of the stent.

8. (original) The endovascular stent according to Claim 6 wherein the fibers are coated with at least a partially dehydrated hydrophilic polymeric gel.

9. (original) An endovascular stent comprising a generally tubular-shaped stent adapted to permanently expanded from a first diameter to a larger second diameter, the stent surrounded on its external tubular walls with a radially expandable graft having a fiber pile extending outwardly from the walls of the graft.

10. (original) The endovascular stent according to Claim 9 wherein one end of the stent is covered by an end wall of the graft, the end wall of the graft having a fiber pile extending outward from its external surface.

11. (original) The endovascular stent according to Claim 9 wherein the radially expandable graft having end walls at both ends and sealing off the ends of the stent, the end walls of the graft having fiber pile extending outwardly from their external surface.

12. (original) The endovascular stent according to Claim 9 wherein the fiber pile is coated with at least a partially dehydrated hydrophilic polymer gel.

13. (original) An occluder comprise a semi-permeable expandable bag having a one-way flow valve which is secured to a delivery tube by releasable bond, the bag having a chamber which is in fluid communication with the delivery tube via the one-way flow valve, a slurry of inert biocompatible particulate solids at least partially filling the bag, particulate solids comprising at least a partially dehydrated hydrophilic polymeric gel that when wetted with water expands filling the bag's chamber and expanding the bag radially outwardly, the chamber adapted to receive aqueous solutions through the delivery tube and one-way flow valve.

14. (original) An occluder comprising a semi-permeable bag having a central chamber, a one-way flow valve opening into the central chamber, a delivery tube which is secured to the one-way flow valve for delivery of materials through the valve into the central chamber, the delivery tube secured to the bag by releasable bond, the bag adapted to receive a slurry of particulate solids in an aqueous medium through the delivery tube and through the one-way valve.

15. (original) An occluder comprising an impervious expandable outer bag and an expandable semi-permeable inner bag within the impervious outer bag to form a chamber between the inner side of the outer bag and the outer side of the inner bag, a one-way flow valve within the inner bag adapted to permit delivery of aqueous solutions into the inner bag through a delivery tube secured to the one-way flow valve and in fluid communication with the valve, the delivery tube is secured to the outer bag by a releasable bond, particulate solids filling the inner bag, the particulate solids comprising at least a partially dehydrated hydrophilic polymeric gel which is adapted to expand when hydrated.

16. (new) The endovascular stent according to Claim 1 wherein the fibers are coated with a pharmaceutically acceptable hydrophilic polymeric gel compatible with mammal body tissues and fluids.

17. (new) The endovascular stent according to Claim 16 wherein the hydrophilic polymeric gel is partially dehydrated.

18. (new) The endovascular stent according to Claim 16 wherein the hydrophilic polymeric gel is fully hydrated.

19. (new) The endovascular stent according to Claim 17 wherein the partially dehydrated hydrophilic polymeric gel is adapted to be hydrated by body fluids.

20. (new) The endovascular stent according to Claim 18 wherein the fully hydrated hydrophilic polymeric gel is adapted to be hydrated by body fluids.

21. (new) The endovascular stent according to Claim 16 wherein the hydrophilic polymeric gel coats the fibers of the fiber pile.

22. (new) The endovascular stent according to Claim 16 wherein the hydrophilic polymeric gel encapsulates the fiber pile.

23. (new) The endovascular stent according to Claim 16 wherein one or more beads of the hydrophilic polymeric gel are attached to the fibers.

24. (new) The endovascular stent according to Claim 16 wherein the hydrophilic polymeric gel is not soluble in the body tissues and fluids.

25. (new) The endovascular stent according to Claim 1 wherein the fibers of the fiber pile are biocompatible fibers.

26. (new) The endovascular stent according to Claim 1 wherein the stent is a self-expanding stent adapted to permanently expand from a first diameter to a larger second diameter.

27. (new) The endovascular stent according to Claim 1 wherein the stent is expandable to permanently expand from a first diameter to a larger second diameter.

28. (new) The endovascular stent according to Claim 1 wherein the fiber pile is adapted to form a foundation for tissue growth between the fiber pile and a surrounding lumenal wall of a vascular vessel when the stent is implanted in a patient.

29. (new) The endovascular stent according to Claim 1 wherein the stent is made of a least two or more helically wound wires, each wire of the stent comprising at least two twisted strands, the twisted strands securing fibers to form a fiber pile extending outwardly from the stent.

30. (new) The endovascular stent according to Claim 29 where at least one helically wound wire is wound in a first direction.

31. (new) The endovascular stent according to Claim 30 wherein at least one other helically wound wire is wound in a second direction.

32. (new) The endovascular stent according to Claim 31 wherein the helically wound wire is in one direction and the helically wound wire is in the other direction are interwoven to form an interweaving structure stent.

33. (new) The endovascular stent according to Claim 31 wherein at least one of the helically wound wires crosses over and crosses under at least one other helically wound wire in a predetermined pattern.

34. (new) An endovascular stent for a vascular vessel comprising a longitudinal stent having a circular configuration in cross section at any point longitudinal along its length, the stent adapted to be permanently expanded radially outward along its length, the stent made of least one helically wound wire, each wire of the stent comprising at least two twisted strands, the twisted strands securing fibers to form a fiber pile extending outwardly from the stent.

ELECTION OF SPECIES

The application has been subject to an election of species requirement. Pursuant to this requirement, the applicant elects the species of Figures 8-10. The species of Figures 8-10 is readable on Claims 1, 3, and 16-34.

REMARKS

Original Claims 1-15 and new Claims 16-34 are in the application. Claims 16-33 are ultimately dependent upon Claim 1. Claim 34 is an independent claim.

Applicant respectfully submits that the species of Figures 5-10 is covered by Claim 34.

Applicant traverses the election of species requirement as follows. Applicant respectfully submits that Figures 1-4, 11-14, and 26 are directed to one species; that Figures 5-10 are directed to a second species; that Figures 15-18 are directed to a third species; and that Figures 19-25 are directed to a fourth species. Even though applicant traverses the election of species requirement, it makes the above election pursuant to the Patent Office Rules.

As the Examiner stated: "Upon the allowance of a generic claim, applicant will be entitled to consideration of claims to additional species which are written in dependent form or otherwise include all the limitations of an allowed generic claim as provided by 37 CFR 1.141." Upon allowance of a generic claim, applicant will prevail itself under Rule 141.

If additional claims are added after the election, applicant will indicate which are readable upon the elected species.

It is respectfully submitted that this amendment is fully responsive to the Office Action mailed on January 25, 2005 and the Notice mailed on May 10, 2005.

Respectfully submitted,

Date: May 25, 2005

William G. Lane
Registration No. 24,761

Correspondence Address:
WILLIAM G. LANE, INC., P.C.
16485 Laguna Canyon Road, #250
Irvine, California 92618
Telephone: 949-585-0348
Facsimile: 949-585-0494

BEST AVAILABLE COPY

Application or Docket Number 10/018164

PATENT APPLICATION FEE DETERMINATION RECORD
Effective October 1, 2001

CLAIMS AS FILED - PART I

	(Column 1)	(Column 2)
TOTAL CLAIMS		
FOR	NUMBER FILED	NUMBER EXTRA
TOTAL CHARGEABLE CLAIMS	15 minus 20=	* —
INDEPENDENT CLAIMS	7 minus 3 =	* 4
MULTIPLE DEPENDENT CLAIM PRESENT		☐

* If the difference in column 1 is less than zero, enter "0" in column 2

SMALL ENTITY TYPE ☐		OR	OTHER THAN SMALL ENTITY	
RATE	FEE		RATE	FEE
BASIC FEE		OR	BASIC FEE	740
X$ 9=		OR	X$18=	
X42=		OR	X84=	336
+140=		OR	+280=	
TOTAL		OR	TOTAL	

CLAIMS AS AMENDED - PART II

5/31/05

AMENDMENT A

	(Column 1) CLAIMS REMAINING AFTER AMENDMENT		(Column 2) HIGHEST NUMBER PREVIOUSLY PAID FOR	(Column 3) PRESENT EXTRA
Total	* 34	Minus	** 20	= 14
Independent	* 8	Minus	*** 7	= 1
FIRST PRESENTATION OF MULTIPLE DEPENDENT CLAIM				☐

SMALL ENTITY		OR	OTHER THAN SMALL ENTITY	
RATE	ADDITIONAL FEE		RATE	ADDITIONAL FEE
X$~~9~~ 25=	350	OR	X$~~18~~ 50=	
~~X42~~ 100=	100	OR	~~X84~~ 200=	
+140=		OR	+280=	
TOTAL ADDIT. FEE	450	OR	TOTAL ADDIT. FEE	

Paid

AMENDMENT B

	(Column 1) CLAIMS REMAINING AFTER AMENDMENT		(Column 2) HIGHEST NUMBER PREVIOUSLY PAID FOR	(Column 3) PRESENT EXTRA
Total	*	Minus	**	=
Independent	*	Minus	***	=
FIRST PRESENTATION OF MULTIPLE DEPENDENT CLAIM				☐

RATE	ADDITIONAL FEE		RATE	ADDITIONAL FEE
X$ 9=		OR	X$18=	
X42=		OR	X84=	
+140=		OR	+280=	
TOTAL ADDIT. FEE		OR	TOTAL ADDIT. FEE	

AMENDMENT C

	(Column 1) CLAIMS REMAINING AFTER AMENDMENT		(Column 2) HIGHEST NUMBER PREVIOUSLY PAID FOR	(Column 3) PRESENT EXTRA
Total	*	Minus	**	=
Independent	*	Minus	***	=
FIRST PRESENTATION OF MULTIPLE DEPENDENT CLAIM				☐

RATE	ADDITIONAL FEE		RATE	ADDITIONAL FEE
X$ 9=		OR	X$18=	
X42=		OR	X84=	
+140=		OR	+280=	
TOTAL ADDIT. FEE		OR	TOTAL ADDIT. FEE	

* If the entry in column 1 is less than the entry in column 2, write "0" in column 3.
** If the "Highest Number Previously Paid For" IN THIS SPACE is less than 20, enter "20."
***If the "Highest Number Previously Paid For" IN THIS SPACE is less than 3, enter "3."
The "Highest Number Previously Paid For" (Total or Independent) is the highest number found in the appropriate box in column 1.

UNITED STATES PATENT AND TRADEMARK OFFICE

UNITED STATES DEPARTMENT OF COMMERCE
United States Patent and Trademark Office
Address: COMMISSIONER FOR PATENTS
P.O. Box 1450
Alexandria, Virginia 22313-1450
www.uspto.gov

APPLICATION NO.	FILING DATE	FIRST NAMED INVENTOR	ATTORNEY DOCKET NO.	CONFIRMATION NO.
10/018,164	05/20/2002	Timothy A.M. Chuter	C010-1001A-US	8768

7590 05/10/2005

William G Lane
16485 Lagna Canyon Road #250
Irvine, CA 92618

EXAMINER
THALER, MICHAEL H

ART UNIT	PAPER NUMBER
3731	

DATE MAILED: 05/10/2005.

Please find below and/or attached an Office communication concerning this application or proceeding.

PTO-90C (Rev. 10/03)

UNITED STATES PATENT AND TRADEMARK OFFICE

COMMISSIONER FOR PATENTS
UNITED STATES PATENT AND TRADEMARK OFFICE
P.O. BOX 1450
ALEXANDRIA, VA 22313-1450
www.uspto.gov

Notice of Non-Compliant Amendment (37 CFR 1.121)

The amendment document filed on 04/25/05 is considered non-compliant because it has failed to meet the requirements of 37 CFR 1.121. In order for the amendment document to be compliant, correction of the following item(s) is required. **Only the corrected section of the non-compliant amendment document must be resubmitted (in its entirety), e.g., the entire "Amendments to the claims" section of applicant's amendment document must be re-submitted.** 37 CFR 1.121(h).

THE FOLLOWING CHECKED (X) ITEM(S) CAUSE THE AMENDMENT DOCUMENT TO BE NON-COMPLIANT:

- ☐ 1. Amendments to the specification:
  - ☐ A. Amended paragraph(s) do not include markings.
  - ☐ B. New paragraph(s) should not be underlined.
  - ☐ C. Other _____
- ☐ 2. Abstract:
  - ☐ A. Not presented on a separate sheet. 37 CFR 1.72.
  - ☐ B. Other _____
- ☐ 3. Amendments to the drawings: _____
- ☑ 4. Amendments to the claims:
  - ☑ A. A complete listing of all of the claims is not present.
  - ☐ B. The listing of claims does not include the text of all pending claims (including withdrawn claims)
  - ☐ C. Each claim has not been provided with the proper status identifier, and as such, the individual status of each claim cannot be identified. Note: the status of every claim must be indicated after its claim number by using one of the following 7 status identifiers: (Original), (Currently amended), (Canceled), (Withdrawn), (Previously presented), (New) and (Not entered).
  - ☐ D. The claims of this amendment paper have not been presented in ascending numerical order.
  - ☐ E. Other: _____

For further explanation of the amendment format required by 37 CFR 1.121, see MPEP Sec. 714 and the USPTO website at http://www.uspto.gov/web/offices/pac/dapp/opla/preognotice/officeflyer.pdf .

If the non-compliant amendment is a **PRELIMINARY AMENDMENT,** applicant is given ONE MONTH from the mail date of this letter to supply the corrected section which complies with 37 CFR 1.121. Failure to comply with 37 CFR 1.121 will result in non-entry of the preliminary amendment and examination on the merits will commence without consideration of the proposed changes in the preliminary amendment(s). This notice is not an action under 35 U.S.C. 132, and **this ONE MONTH time limit is not extendable**.

If the non-compliant amendment is a reply to a **NON-FINAL OFFICE ACTION (including a submission for an RCE),** and since the amendment appears to be a *bona fide* attempt to be a reply (37 CFR 1.135(c)), applicant is given a TIME PERIOD of ONE MONTH from the mailing of this notice within which to re-submit the corrected section which complies with 37 CFR 1.121 in order to avoid abandonment. **EXTENSIONS OF THIS TIME PERIOD ARE AVAILABLE UNDER 37 CFR 1.136(a).**

If the amendment is a reply to a **FINAL REJECTION,** this form may be an attachment to an Advisory Action. **The period for response to a final rejection continues to run from the date set in the final rejection**, and is not affected by the non-compliant status of the amendment.

Dorretta Brooks 571-272-4332

Legal Instruments Examiner (LIE) Telephone No.

Dorretta Brooks

Rev. 6/04

OIPE JC81
APR 25 2005
PATENT & TRADEMARK OFFICE

Attorney Docket: C010-1001A-US

IN THE UNITED STATES PATENT AND TRADEMARK OFFICE

Applicant:	Timothy A.M. Chuter	Examiner:	Michael Thaler
Serial No.:	10/018,164	Art Unit:	3731
Date Filed:	May 20, 2002		
For:	LARGE VESSEL STENTS AND OCCLUDERS		

Mail Stop Amendment
Commissioner for Patents
P.O. Box 1450
Alexandria, VA 22313-1450

Certificate of Mailing

I hereby certify that this document, together with any described as being attached or enclosed, is being deposited with the United States Postal Service as first class mail, postage fully prepaid, addressed to Commissioner for Patents, P.O. Box 1450, Alexandria, VA 22313-1450 on APRIL 21, 2005

Executed on 4/21/05 Maureen Vieira
Maureen Vieira

AMENDMENT AND ELECTION OF SPECIES

Sir:

This amendment is filed in response to the Office Action mailed on January 25, 2005. A two-month extension of time is requested, until April 25, 2005; the fee of $225.00 is attached hereto. The fee of $450.00 for the additional claims is attached.

Claims 16-34 which are set forth below are added to the application.

CLAIMS LISTING

Original Claims 1-15 remain in the application.

Add new Claims 16-34.

16. (new) The endovascular stent according to Claim 1 wherein the fibers are coated with a pharmaceutically acceptable hydrophilic polymeric gel compatible with mammal body tissues and fluids.

04/26/2005 SDENBOB1 00000021 10018164

01 FC:2202 350.00 OP
02 FC:2201 100.00 OP

17. (new) The endovascular stent according to Claim 16 wherein the hydrophilic polymeric gel is partially dehydrated.

18. (new) The endovascular stent according to Claim 16 wherein the hydrophilic polymeric gel is fully hydrated.

19. (new) The endovascular stent according to Claim 17 wherein the partially dehydrated hydrophilic polymeric gel is adapted to be hydrated by body fluids.

20. (new) The endovascular stent according to Claim 18 wherein the fully hydrated hydrophilic polymeric gel is adapted to be hydrated by body fluids.

21. (new) The endovascular stent according to Claim 16 wherein the hydrophilic polymeric gel coats the fibers of the fiber pile.

22. (new) The endovascular stent according to Claim 16 wherein the hydrophilic polymeric gel encapsulates the fiber pile.

23. (new) The endovascular stent according to Claim 16 wherein one or more beads of the hydrophilic polymeric gel are attached to the fibers.

24. (new) The endovascular stent according to Claim 16 wherein the hydrophilic polymeric gel is not soluble in the body tissues and fluids.

25. (new) The endovascular stent according to Claim 1 wherein the fibers of the fiber pile are biocompatible fibers.

26. (new) The endovascular stent according to Claim 1 wherein the stent is a self-expanding stent adapted to permanently expand from a first diameter to a larger second diameter.

27. (new) The endovascular stent according to Claim 1 wherein the stent is expandable to permanently expand from a first diameter to a larger second diameter.

28. (new) The endovascular stent according to Claim 1 wherein the fiber pile is adapted to form a foundation for tissue growth between the fiber pile and a surrounding lumenal wall of a vascular vessel when the stent is implanted in a patient.

29. (new) The endovascular stent according to Claim 1 wherein the stent is made of a least two or more helically wound wires, each wire of the stent comprising at least two twisted strands, the twisted strands securing fibers to form a fiber pile extending outwardly from the stent.

30. (new) The endovascular stent according to Claim 29 where at least one helically wound wire is wound in a first direction.

31. (new) The endovascular stent according to Claim 30 wherein at least one other helically wound wire is wound in a second direction.

32. (new) The endovascular stent according to Claim 31 wherein the helically wound wire is in one direction and the helically wound wire is in the other direction are interwoven to form an interweaving structure stent.

33. (new) The endovascular stent according to Claim 31 wherein at least one of the helically wound wires crosses over and crosses under at least one other helically wound wire in a predetermined pattern.

34. (new) An endovascular stent for a vascular vessel comprising a longitudinal stent having a circular configuration in cross section at any point longitudinal along its length, the stent adapted to be permanently expanded radially outward along its length, the stent made of least one helically wound wire, each wire of the stent comprising at least two twisted strands, the twisted strands securing fibers to form a fiber pile extending outwardly from the stent.

ELECTION OF SPECIES

The application has been subject to an election of species requirement. Pursuant to this requirement, the applicant elects the species of Figures 8-10. The species of Figures 8-10 is readable on Claims 1, 3, and 16-34.

REMARKS

Original Claims 1-15 and new Claims 16-34 are in the application. Claims 16-33 are ultimately dependent upon Claim 1. Claim 34 is an independent claim.

Applicant respectfully submits that the species of Figures 5-10 is covered by Claim 34.

Applicant traverses the election of species requirement as follows. Applicant respectfully submits that Figures 1-4, 11-14, and 26 are directed to one species; that Figures 5-10 are directed to a second species; that Figures 15-18 are directed to a third species; and that Figures 19-25 are directed to a fourth species. Even though applicant traverses the election of species requirement, it makes the above election pursuant to the Patent Office Rules.

As the Examiner stated: "Upon the allowance of a generic claim, applicant will be entitled to consideration of claims to additional species which are written in dependent form or otherwise include all the limitations of an allowed generic claim as provided by 37 CFR 1.141." Upon allowance of a generic claim, applicant will prevail itself under Rule 141.

If additional claims are added after the election, applicant will indicate which are readable upon the elected species.

It is respectfully submitted that this amendment is fully responsive to the Office Action mailed on January 25, 2005.

Respectfully submitted,

Date: April 21, 2005

William G. Lane
Registration No. 24,761

Correspondence Address:
WILLIAM G. LANE, INC., P.C.
16485 Laguna Canyon Road, #250
Irvine, California 92618
Telephone: 949-585-0348
Facsimile: 949-585-0494

#3731
Erlock

Attorney Docket: C010-1001A-US

IN THE UNITED STATES PATENT AND TRADEMARK OFFICE

Applicant:	Timothy A.M. Chuter	Examiner:	Michael Thaler
Serial No.:	10/018,164	Art Unit:	3731
Date Filed:	May 20, 2002		
For:	LARGE VESSEL STENTS AND OCCLUDERS		

Mail Stop Amendment
Commissioner for Patents
P.O. Box 1450
Alexandria, VA 22313-1450

Certificate of Mailing

I hereby certify that this document, together with any described as being attached or enclosed, is being deposited with the United States Postal Service as first class mail, postage fully prepaid, addressed to Commissioner for Patents, P.O. Box 1450, Alexandria, VA 22313-1450 on APRIL 21, 2005

Executed on 4/21/05 Maureen Vieira
Maureen Vieira

TRANSMITTAL AND REQUEST FOR TWO-MONTH EXTENSION OF TIME

Sir:

The following documents are enclosed in connection with applicant's response to the Office Action dated January 25, 2005. A two-month extension of time is requested.

Amendment and Election of Species;

Credit Card Payment Form 2038;

Certificate of Mailing; and

Post card.

The fees for claims and the extension have been calculated as follows for a small entity:

	Claims Remaining	Highest No. Previously Paid	No. Extra	Rate	Additional Fee Due
Total Claims	34	20	14	x $ 25 =	$ 350.00
Total Independent Claims	8	7	1	x $100=	100.00
	Total for Claims				$ 450.00
	2-Month Extension Fee				225.00
	TOTAL DUE				$675.00

04/26/2005 SDENBOB1 00000021 10018164
03 FC:2252 225.00 OP

Date: April 21, 2005

Respectfully submitted,

William G. Lane, Registration No. 24,761

Correspondence Address:
WILLIAM G. LANE, INC., P.C.
16485 Laguna Canyon Road, #250
Irvine, California 92618
Tel. 949-585-0348
Fax. 949-585-0494

UNITED STATES PATENT AND TRADEMARK OFFICE

UNITED STATES DEPARTMENT OF COMMERCE
United States Patent and Trademark Office
Address: COMMISSIONER FOR PATENTS
P.O. Box 1450
Alexandria, Virginia 22313-1450
www.uspto.gov

APPLICATION NO.	FILING DATE	FIRST NAMED INVENTOR	ATTORNEY DOCKET NO.	CONFIRMATION NO.
10/018,164	05/20/2002	Timothy A.M. Chuter	C010-1001A-US	8768

7590 01/25/2005

William G Lane
16485 Lagna Canyon Road #250
Irvine, CA 92618

EXAMINER
THALER, MICHAEL H

ART UNIT	PAPER NUMBER
3731	

DATE MAILED: 01/25/2005

Please find below and/or attached an Office communication concerning this application or proceeding.

Office Action Summary	Application No.	Applicant(s)	
	10/018,164	CHUTER, TIMOTHY A.M.	
	Examiner	Art Unit	
	Michael Thaler	3731	

-- The MAILING DATE of this communication appears on the cover sheet with the correspondence address --

Period for Reply

A SHORTENED STATUTORY PERIOD FOR REPLY IS SET TO EXPIRE 1 MONTH(S) FROM THE MAILING DATE OF THIS COMMUNICATION.

- Extensions of time may be available under the provisions of 37 CFR 1.136(a). In no event, however, may a reply be timely filed after SIX (6) MONTHS from the mailing date of this communication.
- If the period for reply specified above is less than thirty (30) days, a reply within the statutory minimum of thirty (30) days will be considered timely.
- If NO period for reply is specified above, the maximum statutory period will apply and will expire SIX (6) MONTHS from the mailing date of this communication.
- Failure to reply within the set or extended period for reply will, by statute, cause the application to become ABANDONED (35 U.S.C. § 133). Any reply received by the Office later than three months after the mailing date of this communication, even if timely filed, may reduce any earned patent term adjustment. See 37 CFR 1.704(b).

Status

1)☐ Responsive to communication(s) filed on _____.

2a)☐ This action is **FINAL**. 2b)☐ This action is non-final.

3)☐ Since this application is in condition for allowance except for formal matters, prosecution as to the merits is closed in accordance with the practice under *Ex parte Quayle*, 1935 C.D. 11, 453 O.G. 213.

Disposition of Claims

4)☒ Claim(s) 1-15 is/are pending in the application.

4a) Of the above claim(s) _____ is/are withdrawn from consideration.

5)☐ Claim(s) _____ is/are allowed.

6)☐ Claim(s) _____ is/are rejected.

7)☐ Claim(s) _____ is/are objected to.

8)☒ Claim(s) 1-15 are subject to restriction and/or election requirement.

Application Papers

9)☐ The specification is objected to by the Examiner.

10)☐ The drawing(s) filed on _____ is/are: a)☐ accepted or b)☐ objected to by the Examiner.

Applicant may not request that any objection to the drawing(s) be held in abeyance. See 37 CFR 1.85(a).

Replacement drawing sheet(s) including the correction is required if the drawing(s) is objected to. See 37 CFR 1.121(d).

11)☐ The oath or declaration is objected to by the Examiner. Note the attached Office Action or form PTO-152.

Priority under 35 U.S.C. § 119

12)☐ Acknowledgment is made of a claim for foreign priority under 35 U.S.C. § 119(a)-(d) or (f).

a)☐ All b)☐ Some * c)☐ None of:

1.☐ Certified copies of the priority documents have been received.

2.☐ Certified copies of the priority documents have been received in Application No. _____.

3.☐ Copies of the certified copies of the priority documents have been received in this National Stage application from the International Bureau (PCT Rule 17.2(a)).

* See the attached detailed Office action for a list of the certified copies not received.

Attachment(s)

1) ☐ Notice of References Cited (PTO-892)

2) ☐ Notice of Draftsperson's Patent Drawing Review (PTO-948)

3) ☐ Information Disclosure Statement(s) (PTO-1449 or PTO/SB/08) Paper No(s)/Mail Date _____.

4) ☐ Interview Summary (PTO-413) Paper No(s)/Mail Date. _____ .

5) ☐ Notice of Informal Patent Application (PTO-152)

6) ☐ Other: _____.

Aortic Innovations, LLC, Exhibit 2126
Page 2126 - 213
IPR2023-01325, Edwards Lifesciences Corp. et al v. Aortic Innovations, LLC

This application contains claims directed to more than one species of the generic invention. These species are deemed to lack unity of invention because they are not so linked as to form a single general inventive concept under PCT Rule 13.1.

The species are as follows:

The species of figures 1-3;

The species of figure 4;

The species of figures 5-7;

The species of figures 8-10;

The species of figures 15-18;

The species of figures 19-21;

The species of figure 22; and

The species of figure 26.

Applicant is required, in reply to this action, to elect a single species to which the claims shall be restricted if no generic claim is finally held to be allowable. The reply must also identify the claims readable on the elected species, including any claims subsequently added. An argument that a claim is allowable or that all claims are generic is considered non-responsive unless accompanied by an election.

Upon the allowance of a generic claim, applicant will be entitled to consideration of claims to additional species which are written in dependent form or otherwise include all the

limitations of an allowed generic claim as provided by 37 CFR 1.141. If claims are added after the election, applicant must indicate which are readable upon the elected species. MPEP § 809.02(a).

The following claim(s) are generic: None.

The species listed above do not relate to a single general inventive concept under PCT Rule 13.1 because, under PCT Rule 13.2, the species lack the same or corresponding special technical features for the following reasons: Each species is structurally very different from all of the other species.

Applicant is advised that the reply to this requirement to be complete must include an election of the invention to be examined even though the requirement be traversed (37 CFR 1.143).

Any inquiry concerning this communication or earlier communications from the examiner should be directed to Michael Thaler whose telephone number is (571)272-4704. The examiner can normally be reached Monday to Friday.

If attempts to reach the examiner by telephone are unsuccessful, the examiner's supervisor, Anhtuan T. Nguyen can be reached on (571)272-4963. The fax phone number for the organization where this application or proceeding is assigned is (703)872-9306.

mht
1/18/05

MICHAEL THALER
PRIMARY EXAMINER
ART UNIT 3731

3738

OIPE JC119
SEP 2 6 2003
PATENT & TRADEMARK OFFICE

Attorney Docket: C010-1001A-US

IN THE UNITED STATES PATENT AND TRADEMARK OFFICE

IFW

Applicant: Timothy A.M. Chuter

Serial No.: 10/018,164

Date Filed: May 20, 2002

For: LARGE VESSEL STENTS AND OCCLUDERS

Examiner: Unknown

Group Art Unit: 3738

Mail Stop Customer Service Office
Commissioner for Patents
P.O. Box 1450
Alexandria, VA 22313-1450

Certificate of Mailing

I hereby certify that this document, together with any described as being attached or enclosed, is being deposited with the United States Postal Service as first class mail, postage fully prepaid, addressed to Commissioner for Patents, P.O. Box 1450, Alexandria, VA 22313-1450 on SEPTO24, 2003

Executed on 9/24/03 Maureen Vieira
Maureen Vieira

RECEIVED
SEP 30 2003
3700 MAIL ROOM

STATUS INQUIRY

Sir:

Please advise the status of the above-identified patent application.

Respectfully submitted,

Date: 9/23/03

William G. Lane
Registration No. 24,761
Attorney/Agent for Applicant

Correspondence Address:
WILLIAM G. LANE, INC., P.C.
16485 Laguna Canyon Road, #250
Irvine, California 92618
Telephone: 949-585-0348
Facsimile: 949-585-0494

UNITED STATES PATENT AND TRADEMARK OFFICE

Commissioner for Patents, Box PCT
United States Patent and Trademark Office
Washington, D.C. 20231
www.uspto.gov

U.S. APPLICATION NUMBER NO.	FIRST NAMED APPLICANT	ATTY. DOCKET NO.
10/018,164	Timothy A.M. Chuter	C010-1001A-US

INTERNATIONAL APPLICATION NO.
PCT/US01/06632

I.A. FILING DATE	PRIORITY DATE
03/02/2001	03/03/2000

William G Lane
16485 Lagna Canyon Road #250
Irvine, CA 92618

CONFIRMATION NO. 8768

371 ACCEPTANCE LETTER

OC000000008344039

Date Mailed: 06/25/2002

NOTICE OF ACCEPTANCE OF APPLICATION UNDER 35 U.S.C 371 AND 37 CFR 1.494 OR 1.495

The applicant is hereby advised that the United States Patent and Trademark Office in its capacity as a Designated Office (37 CFR 1.494) , has determined that the above identified international application has met the requirements of 35 U.S.C. 371, and is ACCEPTED for national patentability examination in the United States Patent and Trademark Office.

The United States Application Number assigned to the application is shown above and the relevant dates are:

05/20/2002	05/20/2002
DATE OF RECEIPT OF 35 U.S.C. 371(c)(1), (c)(2) and (c)(4) REQUIREMENTS	DATE OF RECEIPT OF ALL 35 U.S.C. REQUIREMENTS

A Filing Receipt (PTO-103X) will be issued for the present application in due course. **THE DATE APPEARING ON THE FILING RECEIPT AS THE " FILING DATE" IS THE DATE ON WHICH THE LAST OF THE 35 U.S.C. 371 REQUIREMENTS HAS BEEN RECEIVED IN THE OFFICE. THIS DATE IS SHOWN ABOVE.** *The filing date of the above identified application is the international filing date of the international application (Article 11(3) and 35 U.S.C. 363).* Once the Filing Receipt has been received, send all correspondence to the Group Art Unit designated thereon.

The following items have been received:

- U.S. Basic National Fee
- Copy of the International Application
- Copy of the International Search Report
- Oath or Declaration
- Request for Immediate Examination

Applicant is reminded that any communications to the United States Patent and Trademark Office must be mailed

to the address given in the heading and include the U.S. application no. shown above (37 CFR 1.5)

TAMALA D HOLLAND
Telephone: (703) 305-5483

PART 3 - OFFICE COPY

FORM PCT/DO/EO/903 (371 Acceptance Notice)

DECLARATION FOR UTILITY OR DESIGN PATENT APPLICATION (37 CFR 1.63)	Attorney Docket Number	C010-1001A-US
	First Named Inventor	Timothy A.M. Chuter
	COMPLETE IF KNOWN	
	Application Number	
	Filing Date	
	Group Art Unit	
	Examiner Name	

☑ Declaration Submitted with Initial Filing

☐ Declaration Submitted after Initial Filing (surcharge (37 CFR 1.16(e)) required)

As a below named inventor, I hereby declare that:

My residence, post office address and citizenship are as stated below next to my name,

I believe I am the original, first and sole inventor (if only one name is listed below) or an original, first and joint inventor (if plural names are listed below) of the subject matter which is claimed and for which a patent is sought on the invention entitled.

LARGE VESSEL STENTS AND OCCLUDERS

the specification of which (check one)

☐ is attached hereto

OR

☒ was filed on (MM/DD/YYYY) 2 March 2001 (02.03.01) as United States Application Number or PCT International Application Number PCT/US01/06632 was amended on (MM/DD/YYYY) _____ (if applicable)

I hereby state that I have reviewed and understand the contents of the above identified specification, including the claims, as amended by any amendment specifically referred to above

I acknowledge the duty to disclose information which is material to patentability as defined in 37 CFR 1 56.

I hereby claim foreign priority benefits under 35 U S C 119(a)-(d) of any foreign application(s) for patent or inventor's certificate or 365(a) of any PCT International application(s) designating at least one country other than the United States of America listed below and have also identified below by checking the box any foreign application(s) for patent or inventor's certificate or of any PCT International application(s) having a filing date before that of the application on which priority is claimed.

Prior Foreign Application Number(s)	Country	Foreign Filing Date (MM/DD/YYYY)	Priority Not Claimed	Certified Copy Attached? Yes	No
n/a			☐	☐	☐
			☐	☐	☐
			☐	☐	☐
			☐	☐	☐

☐ Additional foreign application numbers are listed on a supplemental priority data sheet PTO/SB/02B attached hereto.

I hereby claim the benefit under 35 U S.C. 119(e) of any United States provisional application(s) listed below

Application Number(s)	Filing Date (MM/DD/YYYY)	
n/a		☐ Additional provisional application numbers are listed on a supplemental priority data sheet PTO/SB02B attached hereto.

As a named inventor, I hereby appoint the following registered practitioner(s) to prosecute this application and to transact all business in the Patent and Trademark Office connected therewith ☐ Customer Number

OR

☑ Registered practitioner(s) name/registration number listed below

Name	Registration Number	Name	Registration Number
William G. Lane	24,761		

1

☐ Additional registered practitioners(s) named on supplemental Registered Practitioner Information sheet PTO/sb/02B attached hereto

Direct all correspondence to ☐ Customer Number or Bar Code Label		OR ☑ Correspondence address below

Name	William G. Lane				
Address	~~William G. Lane~~, Inc., P.C.				
Address	~~16485~~ Laguna Canyon Road, #250				
City	Irvine	State	California	ZIP	92618
Country	US	Telephone	949 585-0348	Fax	949-585-0494

I hereby declare that all statements made herein of my own knowledge are true and that all statements made on information and belief are believed to be true; and further that these statements were made with the knowledge that willful false statements and the like so made are punishable by fine or imprisonment, or both, under Section 1001 of Title 18 of the United States Code and that such willful false statements may jeopardize the validity of the application or any patent issued thereon

Name Of Sole Or First Inventor: ☐ A petition has been filed for this unsigned inventor

Given Name (first and middle [if any]): TIMOTHY A.M. Family Name or Surname: CHUTER

Inventor's Signature: [signature] **Date:** 4/30/02

Residence: City Burlingame **State** CA **Country** US **Citizenship:** GB

Post Office Address: 2209 Adeline Drive CA

City Burlingame **State** CA **ZIP** 94010 **Country** US

JC14 Re[illegible]CT/PTO 20 MAY 2002

Attorney Docket: C010-1001A-US

#3

IN THE UNITED STATES PATENT AND TRADEMARK OFFICE

Applicant: Timothy A.M. Chuter

US Appln. No.: 10/018,164
Filed: Oct. 30, 2001

Intl. Appln No.: PCT/US01/06632
IA Filing Date: 3/2/01
Priority Date: 3/3/00

For: LARGE VESSEL STENTS AND OCCLUDERS

Certificate of Mailing

I hereby certify that this document, together with any described as being attached or enclosed, is being deposited with the United States Postal Service as first class mail, postage fully prepaid, addressed to Commissioner for Patents, Box PCT, Washington, D.C 20231, on MAY 7, 2002

Dated: 5/7/02 Maureen Vieira

Maureen Vieira

Commissioner for Patents
BOX PCT
Washington, DC 20231

RESPONSE TO NOTIFICATION OF MISSING REQUIREMENTS UNDER 35 U.S.C. 371 IN THE UNITED STATES DESIGNATED/ELECTED OFFICE (DO/EO/US)

Dear Sir:

In response to the Notification of Missing Requirements, dated April 5, 2001, in the above-identified application, the following items are enclosed:

1) Copy of Form PCT/DO/EO905 (371 Formalities Notice);

2) Executed Declaration with Power of Attorney;

3) Check in the amount of $65.00 covering the small entity surcharge; and

4) Certificate of Mailing.

Applicant/Inventor is a small entity.

05/28/2002 MALI11 00000021 10018164
01 FC:254 65.00 OP

Respectfully submitted,

Date: May 7, 2002

William G. Lane
Registration No. 24,761

LAW OFFICES OF WILLIAM G. LANE
18400 Von Karman Avenue, Suite 500
Irvine, California 92612
Telephone: 714-474-9961
Facsimile: 714-474-9973

UNITED STATES PATENT AND TRADEMARK OFFICE

Commissioner for Patents, Box PCT
United States Patent and Trademark Office
Washington, D.C. 20231
www.uspto.gov

U.S. APPLICATION NUMBER NO.	FIRST NAMED APPLICANT	ATTY. DOCKET NO.
10/018,164	Timothy A.M. Chuter	C010-1001A-US

INTERNATIONAL APPLICATION NO.
PCT/US01/06632

I.A. FILING DATE	PRIORITY DATE
03/02/2001	03/03/2000

William G Lane
16485 Lagna Canyon Road #250
Irvine, CA 92618

CONFIRMATION NO. 8768

371 FORMALITIES LETTER

OC000000007767666

Date Mailed: 04/05/2002

NOTIFICATION OF MISSING REQUIREMENTS UNDER 35 U.S.C. 371 IN THE UNITED STATES DESIGNATED/ELECTED OFFICE (DO/EO/US)

The following items have been submitted by the applicant or the IB to the United States Patent and Trademark Office as a Designated Office (37 CFR 1.494):

- U.S. Basic National Fees
- Priority Document
- Copy of the International Application
- Copy of the International Search Report
- Oath or Declaration
- Request for Immediate Examination

The following items **MUST** be furnished within the period set forth below in order to complete the requirements for acceptance under 35 U.S.C. 371:

- Oath or declaration of the inventors, in compliance with 37 CFR 1.497(a) and (b), identifying the application by the International application number and international filing date. The current oath or declaration does not comply with 37 CFR 1.497(a) and (b) in that it:
  - is not executed in accordance with either 37 CFR 1.66 or 37 CFR 1.68.

- **$130** Surcharge for providing the oath or declaration later than the appropriate 20 months months from the priority date (37 CFR 1.492(e)) is required.

ALL OF THE ITEMS SET FORTH ABOVE MUST BE SUBMITTED WITHIN TWO (2) MONTH FROM THE DATE OF THIS NOTICE OR BY 22 or 32 MONTHS (where 37 CFR 1.495 applies) FROM THE PRIORITY DATE FOR THE APPLICATION, WHICHEVER IS LATER. FAILURE TO PROPERLY RESPOND WILL RESULT IN ABANDONMENT.

The time period set above may be extended by filing a petition and fee for extension of time under the provisions of 37 CFR 1.136(a).

SUMMARY OF FEES DUE:

Total additional fees required for this application is **$130** for a Large Entity:

- **$130** Late oath or declaration Surcharge.

Applicant is reminded that any communications to the United States Patent and Trademark Office must be mailed to the address given in the heading and include the U.S. application no. shown above (37 CFR 1.5)

*A copy of this notice **MUST** be returned with the response.*

TAMALA D HOLLAND

Telephone: (703) 305-5483

PART 2 - OFFICE COPY

U.S. APPLICATION NUMBER NO.	INTERNATIONAL APPLICATION NO.	ATTY. DOCKET NO.
10/018,164	PCT/US01/06632	C010-1001A-US

FORM PCT/DO/EO/905 (371 Formalities Notice)

BEST AVAILABLE COPY

Application or Docket Number

PATENT APPLICATION FEE DETERMINATION RECORD

Effective October 1, 2001

CLAIMS AS FILED - PART I

	(Column 1)	(Column 2)
TOTAL CLAIMS		
FOR	NUMBER FILED	NUMBER EXTRA
TOTAL CHARGEABLE CLAIMS	15 minus 20=	* —
INDEPENDENT CLAIMS	7 minus 3 =	* 4
MULTIPLE DEPENDENT CLAIM PRESENT		☐

* If the difference in column 1 is less than zero, enter "0" in column 2

SMALL ENTITY TYPE ☐		OR	OTHER THAN SMALL ENTITY	
RATE	FEE		RATE	FEE
BASIC FEE		OR	BASIC FEE	740
X$ 9=		OR	X$18=	
X42=		OR	X84=	336
+140=		OR	+280=	
TOTAL		OR	TOTAL	

CLAIMS AS AMENDED - PART II

AMENDMENT A

	(Column 1) CLAIMS REMAINING AFTER AMENDMENT		(Column 2) HIGHEST NUMBER PREVIOUSLY PAID FOR	(Column 3) PRESENT EXTRA
Total	*	Minus	**	=
Independent	*	Minus	***	=
FIRST PRESENTATION OF MULTIPLE DEPENDENT CLAIM				☐

SMALL ENTITY		OR	OTHER THAN SMALL ENTITY	
RATE	ADDI-TIONAL FEE		RATE	ADDI-TIONAL FEE
X$ 9=		OR	X$18=	
X42=		OR	X84=	
+140=		OR	+280=	
TOTAL ADDIT. FEE		OR	TOTAL ADDIT. FEE	

AMENDMENT B

	(Column 1) CLAIMS REMAINING AFTER AMENDMENT		(Column 2) HIGHEST NUMBER PREVIOUSLY PAID FOR	(Column 3) PRESENT EXTRA
Total	*	Minus	**	=
Independent	*	Minus	***	=
FIRST PRESENTATION OF MULTIPLE DEPENDENT CLAIM				☐

RATE	ADDI-TIONAL FEE		RATE	ADDI-TIONAL FEE
X$ 9=		OR	X$18=	
X42=		OR	X84=	
+140=		OR	+280=	
TOTAL ADDIT. FEE		OR	TOTAL ADDIT. FEE	

AMENDMENT C

	(Column 1) CLAIMS REMAINING AFTER AMENDMENT		(Column 2) HIGHEST NUMBER PREVIOUSLY PAID FOR	(Column 3) PRESENT EXTRA
Total	*	Minus	**	=
Independent	*	Minus	***	=
FIRST PRESENTATION OF MULTIPLE DEPENDENT CLAIM				☐

RATE	ADDI-TIONAL FEE		RATE	ADDI-TIONAL FEE
X$ 9=		OR	X$18=	
X42=		OR	X84=	
+140=		OR	+280=	
TOTAL ADDIT. FEE		OR	TOTAL ADDIT. FEE	

* If the entry in column 1 is less than the entry in column 2, write "0" in column 3.
** If the "Highest Number Previously Paid For" IN THIS SPACE is less than 20, enter "20."
***If the "Highest Number Previously Paid For" IN THIS SPACE is less than 3, enter "3."
The "Highest Number Previously Paid For" (Total or Independent) is the highest number found in the appropriate box in column 1.

BEST AVAILABLE COPY

PATENT APPLICATION SERIAL NO. _____

U.S. DEPARTMENT OF COMMERCE
PATENT AND TRADEMARK OFFICE
FEE RECORD SHEET

04/02/2002 THOLLAND 00000002 10018164

PTO-1556
(5/87)

01 FC:958 740.00 OP

02 FC:964 336.00 OP

TAMALA HOLLAND
PARALEGAL SPECIALIST
DESIGNATED OFFICE
(703) 308-6493

MULTIPLE DEPENDENT CLAIM FEE CALCULATION SHEET

(FOR USE WITH FORM PTO-875)

SERIAL NO.

FILING DATE

APPLICANT(S)

CLAIMS

	AS FILED		AFTER 1st AMENDMENT		AFTER 2nd AMENDMENT	
	IND.	DEP.	IND.	DEP.	IND.	DEP.
1	/					
2		/				
3		/				
4	/					
5		/				
6	/					
7		/				
8		/				
9	/					
10		/				
11		/				
12		/				
13	/					
14	/					
15	/					
16						
17						
18						
19						
20						
21						
22						
23						
24						
25						
26						
27						
28						
29						
30						
31						
32						
33						
34						
35						
36						
37						
38						
39						
40						
41						
42						
43						
44						
45						
46						
47						
48						
49						
50						
TOTAL IND.	7					
TOTAL DEP.	8					
TOTAL CLAIMS	15					

	*		*		*	
	IND.	DEP.	IND.	DEP.	IND.	DEP.
51						
52						
53						
54						
55						
56						
57						
58						
59						
60						
61						
62						
63						
64						
65						
66						
67						
68						
69						
70						
71						
72						
73						
74						
75						
76						
77						
78						
79						
80						
81						
82						
83						
84						
85						
86						
87						
88						
89						
90						
91						
92						
93						
94						
95						
96						
97						
98						
99						
100						
TOTAL IND.						
TOTAL DEP.						
TOTAL CLAIMS						

PTO-1360 (3-78)

*MAY BE USED FOR ADDITIONAL CLAIMS OR AMENDMENTS

U.S. DEPARTMENT of COMMERCE
Patent and Trademark Office

BEST AVAILABLE COPY

DECLARATION FOR UTILITY OR DESIGN PATENT APPLICATION (37 CFR 1.63)	Attorney Docket Number	C010-1001A-US
	First Named Inventor	Timothy A.M. Chuter
	COMPLETE IF KNOWN	
	Application Number	
	Filing Date	
	Group Art Unit	
	Examiner Name	

☑ Declaration Submitted with Initial Filing

☐ Declaration Submitted after Initial Filing (surcharge (37 CFR 1.16(e)) required)

As a below named inventor, I hereby declare that:

My residence, post office address and citizenship are as stated below next to my name,

I believe I am the original, first and sole inventor (if only one name is listed below) or an original, first and joint inventor (if plural names are listed below) of the subject matter which is claimed and for which a patent is sought on the invention entitled:

LARGE VESSEL STENTS AND OCCLUDERS

the specification of which (check one)

☐ is attached hereto.

OR

☐ was filed on (MM/DD/YYYY) 2 March 2001 (02.03.01) as United States Application Number or PCT International Application Number PCT/US01/06632 was amended on (MM/DD/YYYY) _____ (if applicable).

I hereby state that I have reviewed and understand the contents of the above identified specification, including the claims, as amended by any amendment specifically referred to above.

I acknowledge the duty to disclose information which is material to patentability as defined in 37 CFR 1.56.

I hereby claim foreign priority benefits under 35 U.S.C. 119(a)-(d) of any foreign application(s) for patent or inventor's certificate or 365(a) of any PCT International application(s) designating at least one country other than the United States of America listed below and have also identified below by checking the box any foreign application(s) for patent or inventor's certificate or of any PCT International application(s) having a filing date before that of the application on which priority is claimed:

Prior Foreign Application Number(s)	Country	Foreign Filing Date (MM/DD/YYYY)	Priority Not Claimed	Certified Copy Attached? Yes	No
n/a			☐	☐	☐
			☐	☐	☐
			☐	☐	☐
			☐	☐	☐

☐ Additional foreign application numbers are listed on a supplemental priority data sheet PTO/SB/02B attached hereto.

I hereby claim the benefit under 35 U.S.C. 119(e) of any United States provisional application(s) listed below.

Application Number(s)	Filing Date (MM/DD/YYYY)	
n/a		☐ Additional provisional application numbers are listed on a supplemental priority data sheet PTO/SB02B attached hereto.

As a named inventor, I hereby appoint the following registered practitioner(s) to prosecute this application and to transact all business in the Patent and Trademark Office connected therewith: ☐ Customer Number

OR

☑ Registered practitioner(s) name/registration number listed below

Name	Registration Number	Name	Registration Number
William G. Lane	24,761		

Aortic Innovations, LLC, Exhibit 2126
Page 2126 - 228
IPR2023-01325, Edwards Lifesciences Corp. et al v. Aortic Innovations, LLC

☐ Additional registered practitioners(s) named on supplemental Registered Practitioner Information sheet PTO/sb/02B attached hereto.

Direct all correspondence to: ☐ Customer Number or Bar Code Label		OR ☑ Correspondence address below

Name	William G. Lane				
Address	William G. Lane, Inc., P.C.				
Address	16485 Laguna Canyon Road, #250				
City	Irvine	State	California	ZIP	92618
Country	US	Telephone	949 585-0348	Fax	949-585-0494

I hereby declare that all statements made herein of my own knowledge are true and that all statements made on information and belief are believed to be true; and further that these statements were made with the knowledge that willful false statements and the like so made are punishable by fine or imprisonment, or both, under Section 1001 of Title 18 of the United States Code and that such willful false statements may jeopardize the validity of the application or any patent issued thereon.

Name Of Sole Or First Inventor: ☐ A petition has been filed for this unsigned inventor.

Given Name (first and middle [if any]): TIMOTHY A.M.

Family Name or Surname: CHUTER

Inventor's Signature: _____ **Date:** _____

Residence: City Burlingame **State** CA **Country** US **Citizenship:** GB

Post Office Address: 2209 Adeline Drive

City Burlingame **State** CA **ZIP** 94010 **Country** US

Aortic Innovations, LLC, Exhibit 2126
Page 2126 - 229
IPR2023-01325, Edwards Lifesciences Corp. et al v. Aortic Innovations, LLC

HOME COPY

PCT

REQUEST

The undersigned requests that the present international application be processed according to the Patent Cooperation Treaty.

For receiving Office use only

International Application No. PCT/US 01/06632

02 MAR 2001 (02.03.01)

International Filing Date

PCT INTERNATIONAL APPLICATION RO/US

Name of receiving Office and "PCT International Application"

Applicant's or agent's file reference (if desired) (12 characters maximum) C010-1001A-PCT

Box No. I TITLE OF INVENTION

LARGE VESSEL STENTS AND OCCLUDERS

Box No. II APPLICANT

Name and address: *(Family name followed by given name; for a legal entity, full official designation. The address must include postal code and name of country. The country of the address indicated in this Box is the applicant's State (that is, country) of residence if no State of residence is indicated below.)*

CHUTER, Timothy A.M.
2209 Adeline Drive
Burlingame, California 94010
United States of America

[X] This person is also inventor.

Telephone No. 415 476-2381

Facsimile No. 415 476-4950

Teleprinter No.

State *(that is, country)* of nationality: GB

State *(that is, country)* of residence: US

This person is applicant for the purposes of: [X] all designated States [ ] all designated States except the United States of America [ ] the United States of America only [ ] the States indicated in the Supplemental Box

Box No. III FURTHER APPLICANT(S) AND/OR (FURTHER) INVENTOR(S)

Name and address: *(Family name followed by given name; for a legal entity, full official designation. The address must include postal code and name of country. The country of the address indicated in this Box is the applicant's State (that is, country) of residence if no State of residence is indicated below.)*

This person is:

[ ] applicant only

[ ] applicant and inventor

[ ] inventor only *(If this check-box is marked, do not fill in below.)*

State *(that is, country)* of nationality:

State *(that is, country)* of residence:

This person is applicant for the purposes of: [ ] all designated States [ ] all designated States except the United States of America [ ] the United States of America only [ ] the States indicated in the Supplemental Box

[ ] Further applicants and/or (further) inventors are indicated on a continuation sheet.

Box No. IV AGENT OR COMMON REPRESENTATIVE; OR ADDRESS FOR CORRESPONDENCE

The person identified below is hereby/has been appointed to act on behalf of the applicant(s) before the competent International Authorities as: [X] agent [ ] common representative

Name and address: *(Family name followed by given name; for a legal entity, full official designation. The address must include postal code and name of country.)*

LANE, William G.
18400 Von Karman Avenue, Suite 500
Irvine, California 92612
United States of America

Telephone No. 949 474-9961

Facsimile No. 949 474-9973

Teleprinter No.

[ ] **Address for correspondence:** Mark this check-box where no agent or common representative is/has been appointed and the space above is used instead to indicate a special address to which correspondence should be sent.

DELETED BY R 78

Aortic Innovations, LLC, Exhibit 2126
Page 2126 - 230
IPR2023-01325, Edwards Lifesciences Corp. et al v. Aortic Innovations, LLC

Box No.V DESIGNATION OF STATES

The following designations are hereby made under Rule 4.9(a) *(mark the applicable check-boxes; at least one must be marked)*:

Regional Patent

- [X] AP **ARIPO Patent:** GH Ghana, GM Gambia, KE Kenya, LS Lesotho, MW Malawi, SD Sudan, SL Sierra Leone, SZ Swaziland, UG Uganda, ZW Zimbabwe, and any other State which is a Contracting State of the Harare Protocol and of the PCT
- [X] EA **Eurasian Patent:** AM Armenia, AZ Azerbaijan, BY Belarus, KG Kyrgyzstan, KZ Kazakhstan, MD Republic of Moldova, RU Russian Federation, TJ Tajikistan, TM Turkmenistan, and any other State which is a Contracting State of the Eurasian Patent Convention and of the PCT
- [X] EP **European Patent:** AT Austria, BE Belgium, CH and LI Switzerland and Liechtenstein, CY Cyprus, DE Germany, DK Denmark, ES Spain, FI Finland, FR France, GB United Kingdom, GR Greece, IE Ireland, IT Italy, LU Luxembourg, MC Monaco, NL Netherlands, PT Portugal, SE Sweden, and any other State which is a Contracting State of the European Patent Convention and of the PCT
- [X] OA **OAPI Patent:** BF Burkina Faso, BJ Benin, CF Central African Republic, CG Congo, CI Côte d'Ivoire, CM Cameroon, GA Gabon, GN Guinea, GW Guinea-Bissau, ML Mali, MR Mauritania, NE Niger, SN Senegal, TD Chad, TG Togo, and any other State which is a member State of OAPI and a Contracting State of the PCT *(if other kind of protection or treatment desired, specify on dotted line)* .....

National Patent *(if other kind of protection or treatment desired, specify on dotted line)*:

- [X] AE United Arab Emirates
- [X] AL Albania .....
- [X] AM Armenia .....
- [X] AT Austria .....
- [X] AU Australia .....
- [X] AZ Azerbaijan
- [X] BA Bosnia and Herzegovina .....
- [X] BB Barbados
- [X] BG Bulgaria .....
- [X] BR Brazil .....
- [X] BY Belarus .....
- [X] CA Canada
- [X] CH and LI Switzerland and Liechtenstein
- [X] CN China .....
- [X] CU Cuba .....
- [X] CZ Czech Republic .....
- [X] DE Germany .....
- [X] DK Denmark .....
- [X] EE Estonia .....
- [X] ES Spain .....
- [X] FI Finland .....
- [X] GB United Kingdom
- [X] GD Grenada
- [X] GE Georgia .....
- [X] GH Ghana .....
- [X] GM Gambia
- [X] HR Croatia .....
- [X] HU Hungary .....
- [X] ID Indonesia
- [X] IL Israel .....
- [X] IN India .....
- [X] IS Iceland
- [X] JP Japan .....
- [X] KE Kenya .....
- [X] KG Kyrgyzstan .....
- [X] KP Democratic People's Republic of Korea .....
- [X] KR Republic of Korea .....
- [X] KZ Kazakhstan .....
- [X] LC Saint Lucia
- [X] LK Sri Lanka
- [X] LR Liberia
- [X] LS Lesotho .....
- [X] LT Lithuania
- [X] LU Luxembourg
- [X] LV Latvia
- [X] MD Republic of Moldova .....
- [X] MG Madagascar .....
- [X] MK The former Yugoslav Republic of Macedonia .....
- [X] MN Mongolia
- [X] MW Malawi .....
- [X] MX Mexico .....
- [X] NO Norway
- [X] NZ New Zealand .....
- [X] PL Poland .....
- [X] PT Portugal .....
- [X] RO Romania
- [X] RU Russian Federation .....
- [X] SD Sudan
- [X] SE Sweden
- [X] SG Singapore
- [X] SI Slovenia .....
- [X] SK Slovakia .....
- [X] SL Sierra Leone .....
- [X] TJ Tajikistan .....
- [X] TM Turkmenistan .....
- [X] TR Turkey .....
- [X] TT Trinidad and Tobago .....
- [X] UA Ukraine .....
- [X] UG Uganda .....
- [X] US United States of America .....
- [X] UZ Uzbekistan .....
- [X] VN Viet Nam .....
- [X] YU Yugoslavia .....
- [X] ZA South Africa .....
- [X] ZW Zimbabwe .....

Check-boxes reserved for designating States which have become party to the PCT after issuance of this sheet:

- [ ] .....
- [ ] .....

Precautionary Designation Statement: In addition to the designations made above, the applicant also makes under Rule 4.9(b) all other designations which would be permitted under the PCT except any designation(s) indicated in the Supplemental Box as being excluded from the scope of this statement. The applicant declares that those additional designations are subject to confirmation and that any designation which is not confirmed before the expiration of 15 months from the priority date is to be regarded as withdrawn by the applicant at the expiration of that time limit. *(Confirmation of a designation consists of the filing of a notice specifying that designation and the payment of the designation and confirmation fees. Confirmation must reach the receiving Office within the 15-month time limit.)*

Aortic Innovations, LLC, Exhibit 2126
Page 2126 - 231
IPR2023-01325, Edwards Lifesciences Corp. et al v. Aortic Innovations, LLC

PCT/US 01/06632

Supplemental Box *If the Supplemental Box is not used, this sheet should not be included in the request.*

*1. If, in any of the Boxes, **the space is insufficient** to furnish all the information: in such case, write "Continuation of Box No. ..." [indicate the number of the Box] and furnish the information in the same manner as required according to the captions of the Box in which the space was insufficient, in particular:*

*(i) **if more than two persons are involved as applicants and/or inventors** and no "continuation sheet" is available: in such case, write "Continuation of Box No. III" and indicate for each additional person the same type of information as required in Box No. III. The country of the address indicated in this Box is the applicant's State (that is, country) of residence if no State of residence is indicated below;*

*(ii) if, in Box No. II or in any of the sub-boxes of Box No. III, the indication **"the States indicated in the Supplemental Box"** is checked: in such case, write "Continuation of Box No. II" or "Continuation of Box No. III" or "Continuation of Boxes No. II and No. III" (as the case may be), indicate the name of the applicant(s) involved and, next to (each) such name, the State(s) (and/or, where applicable, ARIPO, Eurasian, European or OAPI patent) for the purposes of which the named person is applicant;*

*(iii) if, in Box No. II or in any of the sub-boxes of Box No. III, **the inventor or the inventor/applicant is not inventor for the purposes of all designated States or for the purposes of the United States of America**: in such case, write "Continuation of Box No. II" or "Continuation of Box No. III" or "Continuation of Boxes No. II and No. III" (as the case may be), indicate the name of the inventor(s) and, next to (each) such name, the State(s) (and/or, where applicable, ARIPO, Eurasian, European or OAPI patent) for the purposes of which the named person is inventor;*

*(iv) if, in addition to the agent(s) indicated in Box No. IV, there are **further agents**: in such case, write "Continuation of Box No. IV" and indicate for each further agent the same type of information as required in Box No. IV;*

*(v) if, in Box No. V, the name of any State (or OAPI) is accompanied by the indication "**patent of addition**," or "**certificate of addition**," or if, in Box No. V, the name of the United States of America is accompanied by an indication "**continuation**" or "**continuation-in-part**": in such case, write "Continuation of Box No. V" and the name of each State involved (or OAPI), and after the name of each such State (or OAPI), the number of the parent title or parent application and the date of grant of the parent title or filing of the parent application;*

*(vi) if, in Box No. VI, there are **more than three earlier applications whose priority is claimed**: in such case, write "Continuation of Box No. VI" and indicate for each additional earlier application the same type of information as required in Box No. VI;*

*(vii) if, in Box No. VI, **the earlier application is an ARIPO application**: in such case, write "Continuation of Box No. VI", specify the number of the item corresponding to that earlier application and indicate at least one country party to the Paris Convention for the Protection of Industrial Property for which that earlier application was filed.*

*2. If, with regard to the **precautionary designation statement** contained in Box No. V, the applicant wishes to exclude any State(s) from the scope of that statement: in such case, write "Designation(s) excluded from precautionary designation statement" and indicate the name or two-letter code of each State so excluded.*

*3. If the applicant claims, in respect of any designated Office, the benefits of provisions of the national law concerning **non-prejudicial disclosures or exceptions to lack of novelty**: in such case, write "Statement concerning non-prejudicial disclosures or exceptions to lack of novelty" and furnish that statement below.*

This application claims priority of U.S. Provisional Application No. 60/186,806, filed March 3, 2000.

Formal drawings are in the process of being prepared.

The Power of Attorney is being executed by applicant.

 PCT/US 01/06632

Box No. VI PRIORITY CLAIM

☐ Further priority claims indicated in the Supplemental Box.

Filing date of earlier application (day/month/year)	Number of earlier application	Where earlier application is: national application: country	regional application:* regional Office	international application: receiving Office
item (1) 03 March 2000 (03.03.00)	60/186,806	US		
item (2)				
item (3)				

☒ The receiving Office is requested to prepare and transmit to the International Bureau a certified copy of the earlier application(s) *(only if the earlier application was filed with the Office which for the purposes of the present international application is the receiving Office)* identified above as item(s): (1)

* *Where the earlier application is an ARIPO application, it is mandatory to indicate in the Supplemental Box at least one country party to the Paris Convention for the Protection of Industrial Property for which that earlier application was filed (Rule 4.10(b)(ii)). See Supplemental Box.*

Box No. VII INTERNATIONAL SEARCHING AUTHORITY

Choice of International Searching Authority (ISA) *(if two or more International Searching Authorities are competent to carry out the international search, indicate the Authority chosen; the two-letter code may be used)* :

ISA / USPTO

Request to use results of earlier search; reference to that search *(if an earlier search has been carried out by or requested from the International Searching Authority)*:

Date *(day/month/year)* Number Country *(or regional Office)*

Box No. VIII CHECK LIST; LANGUAGE OF FILING

This international application contains the following **number of sheets**:

request	:	4
description (excluding sequence listing part)	:	14
claims	:	3
abstract	:	1
drawings	:	7
sequence listing part of description	:	
Total number of sheets	:	29

This international application is **accompanied by** the item(s) marked below:

1. ☒ fee calculation sheet
2. ☐ separate signed power of attorney
3. ☐ copy of general power of attorney; reference number, if any:
4. ☒ statement explaining lack of signature
5. ☐ priority document(s) identified in Box No.VI as item(s):
6. ☐ translation of international application into (language):
7. ☐ separate indications concerning deposited microorganism or other biological material
8. ☐ nucleotide and/or amino acid sequence listing in computer readable form
9. ☐ other *(specify)*:

Figure of the drawings which should accompany the abstract:

Language of filing of the international application: English

Box No. IX SIGNATURE OF APPLICANT OR AGENT

Next to each signature, indicate the name of the person signing and the capacity in which the person signs (if such capacity is not obvious from reading the request).

William G. Lane, Agent

(02.03.01)

For receiving Office use only

1. Date of actual receipt of the purported international application: JC08 Rec'd PCT/PTO 02 MAR 2001
2. Drawings: ☐ received: ☐ not received:
3. Corrected date of actual receipt due to later but timely received papers or drawings completing the purported international application:
4. Date of timely receipt of the required corrections under PCT Article 11(2):
5. International Searching Authority (if two or more are competent): ISA / US
6. ☐ Transmittal of search copy delayed until search fee is paid.

For International Bureau use only

Date of receipt of the record copy by the International Bureau:

▲▲ DELETED BY RO/US

Aortic Innovations, LLC, Exhibit 2126
Page 2126 - 233
IPR2023-01325, Edwards Lifesciences Corp. et al v. Aortic Innovations, LLC

(12) INTERNATIONAL APPLICATION PUBLISHED UNDER THE PATENT COOPERATION TREATY (PCT)

(19) World Intellectual Property Organization
International Bureau

(43) International Publication Date
13 September 2001 (13.09.2001)

PCT

(10) International Publication Number
WO 01/66167 A2

(51) International Patent Classification[7]: A61M

(21) International Application Number: PCT/US01/06632

(22) International Filing Date: 2 March 2001 (02.03.2001)

(25) Filing Language: English

(26) Publication Language: English

(30) Priority Data:
60/186,806 3 March 2000 (03.03.2000) US

(71) Applicant and
(72) Inventor: CHUTER, Timothy, A., M. [GB/US]; 2209 Adeline Drive, Burlingame, CA 94010 (US).

(74) Agent: LANE, William, G.; William G. Lane, Inc. P.C., 16485 Laguna Canyon Road, #250, Irvine, CA 92618 (US).

(81) Designated States *(national)*: AE, AL, AM, AT, AU, AZ, BA, BB, BG, BR, BY, CA, CH, CN, CU, CZ, DE, DK, EE, ES, FI, GB, GD, GE, GH, GM, HR, HU, ID, IL, IN, IS, JP, KE, KG, KP, KR, KZ, LC, LK, LR, LS, LT, LU, LV, MD, MG, MK, MN, MW, MX, NO, NZ, PL, PT, RO, RU, SD, SE, SG, SI, SK, SL, TJ, TM, TR, TT, UA, UG, US, UZ, VN, YU, ZA, ZW.

(84) Designated States *(regional)*: ARIPO patent (GH, GM, KE, LS, MW, MZ, SD, SL, SZ, TZ, UG, ZW), Eurasian patent (AM, AZ, BY, KG, KZ, MD, RU, TJ, TM), European patent (AT, BE, CH, CY, DE, DK, ES, FI, FR, GB, GR, IE, IT, LU, MC, NL, PT, SE, TR), OAPI patent (BF, BJ, CF, CG, CI, CM, GA, GN, GW, ML, MR, NE, SN, TD, TG).

Published:
— *without international search report and to be republished upon receipt of that report*

For two-letter codes and other abbreviations, refer to the "Guidance Notes on Codes and Abbreviations" appearing at the beginning of each regular issue of the PCT Gazette.

WO 01/66167 A2

(54) Title: LARGE VESSEL STENTS AND OCCLUDERS

(57) Abstract: An endovascular stent for vascular vessels which can be used to occlude the vessel or which can be used to bridge damaged areas in the vessel. The endovascular stent comprising a stent that can be permanently expanded from a first diameter to a larger second diameter. The stent can be a helically wound wire stent, each wire comprising at least two strands. The two strands being twisted. The twisted strands securing fibers to form a fabric pile extending outwardly from stent, and optionally extending inwardly into the stent. In a second embodiment, the stent is enclosed with a tubular-like expandable graft. The graft having an exterior fabric pile made up of individual fibers. In both embodiments, the fibers or the pile are optionally coated with a hydrophilic polymeric gel which expands upon being wetted.

I Claim:

1. An endovascular stent for a vascular vessel comprising a generally tubular stent adapted to permanently expand from a first diameter to a larger second diameter, the stent made of at least one helically wound wire, each wire of the stent comprising at least two twisted strands, the twisted strands securing fibers to form a fiber pile extending outwardly from the stent.

2. The endovascular stent according to Claim 1 wherein the twisted strands also securing fibers to form a fiber pile extending inwardly into the stent to substantially occlude the inner bore of the stent.

3. The endovascular stent of Claim 1 wherein the fibers are coated with at least a partially dehydrated hydrophilic polymeric gel.

4. An endovascular stent for occluding the lumen of a vascular vessel comprising a generally conical-shaped stent member having a first large diameter at one end and a small diameter at the opposing end, the stent adapted to permanently expand the first large diameter to a larger diameter, the stent made of at least one helically wound wire, each wire of the stent comprising at least two twisted strands, the twisted strands securing fibers to form a fiber pile extending outwardly from the stent and extending inwardly into the stent to substantially occlude the inner bore of the stent.

5. The endovascular stent of Claim 4 wherein the fibers are coated with at least a partially dehydrated hydrophilic polymeric gel.

6. An endovascular stent for occluding a lumen of a vascular vessel comprising a generally umbrella-shaped member having a plurality of radially wire ribs joined together at one of their ends and biased to extend radially outwardly and downwardly, each rib comprising of at least two twisted strands, the twisted strands securing fibers which extend outwardly from the wire ribs to form a fiber pile.

Aortic Innovations, LLC, Exhibit 2126
Page 2126 - 235
IPR2023-01325, Edwards Lifesciences Corp. et al v. Aortic Innovations, LLC

7. The endovascular stent according to Claim 6 wherein the twisted strands also secure fibers which extend inwardly from the wire ribs to substantially occlude the inner bore of the stent.

8. The endovascular stent according to Claim 6 wherein the fibers are coated with at least a partially dehydrated hydrophilic polymeric gel.

9. An endovascular stent comprising a generally tubular-shaped stent adapted to permanently expanded from a first diameter to a larger second diameter, the stent surrounded on its external tubular walls with a radially expandable graft having a fiber pile extending outwardly from the walls of the graft.

10. The endovascular stent according to Claim 9 wherein one end of the stent is covered by an end wall of the graft, the end wall of the graft having a fiber pile extending outward from its external surface.

11. The endovascular stent according to Claim 9 wherein the radially expandable graft having end walls at both ends and sealing off the ends of the stent, the end walls of the graft having fiber pile extending outwardly from their external surface.

12. The endovascular stent according to Claim 9 wherein the fiber pile is coated with at least a partially dehydrated hydrophilic polymer gel.

13. An occluder comprise a semi-permeable expandable bag having a one-way flow valve which is secured to a delivery tube by releasable bond, the bag having a chamber which is in fluid communication with the delivery tube via the one-way flow valve, a slurry of inert biocompatible particulate solids at least partially filling the bag, particulate solids comprising at least a partially dehydrated hydrophilic polymeric gel that when wetted with water expands filling the bag's chamber and expanding the bag radially outwardly, the chamber adapted to receive aqueous solutions through the delivery tube and one-way flow valve.

14. An occluder comprising a semi-permeable bag having a central chamber, a one-way flow valve opening into the central chamber, a delivery tube which is secured to

Aortic Innovations, LLC, Exhibit 2126
Page 2126 - 236
IPR2023-01325, Edwards Lifesciences Corp. et al v. Aortic Innovations, LLC

the one-way flow valve for delivery of materials through the valve into the central chamber, the delivery tube secured to the bag by releasable bond, the bag adapted to receive a slurry of particulate solids in an aqueous medium through the delivery tube and through the one-way valve.

15. An occluder comprising an impervious expandable outer bag and an expandable semi-permeable inner bag within the impervious outer bag to form a chamber between the inner side of the outer bag and the outer side of the inner bag, a one-way flow valve within the inner bag adapted to permit delivery of aqueous solutions into the inner bag through a delivery tube secured to the one-way flow valve and in fluid communication with the valve, the delivery tube is secured to the outer bag by a releasable bond, particulate solids filling the inner bag, the particulate solids comprising at least a partially dehydrated hydrophilic polymeric gel which is adapted to expand when hydrated.

Aortic Innovations, LLC, Exhibit 2126
Page 2126 - 237
IPR2023-01325, Edwards Lifesciences Corp. et al v. Aortic Innovations, LLC

Fig. 1

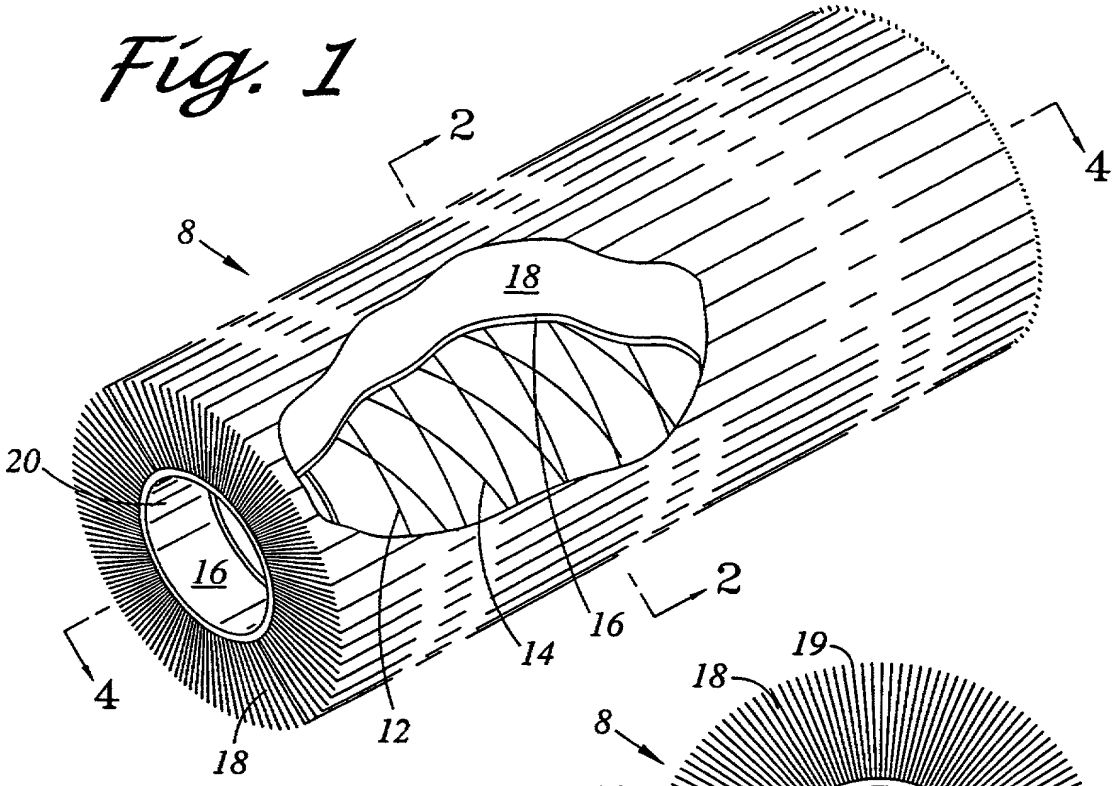

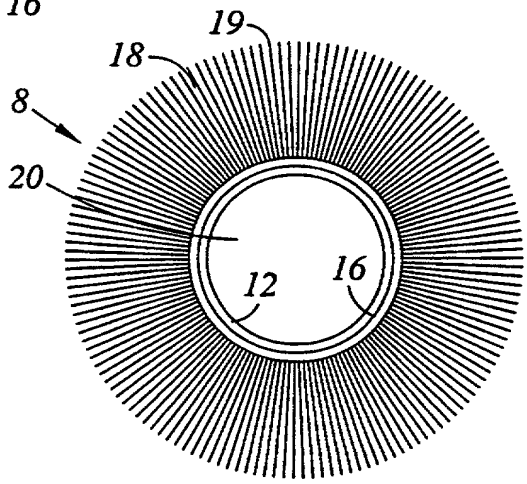

Fig. 2

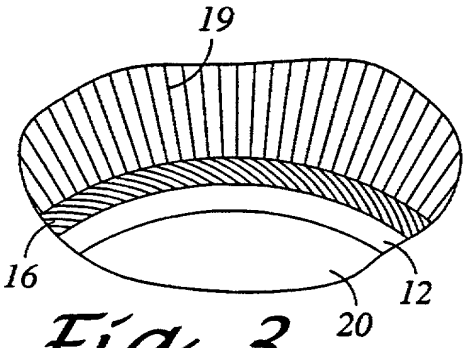

Fig. 3

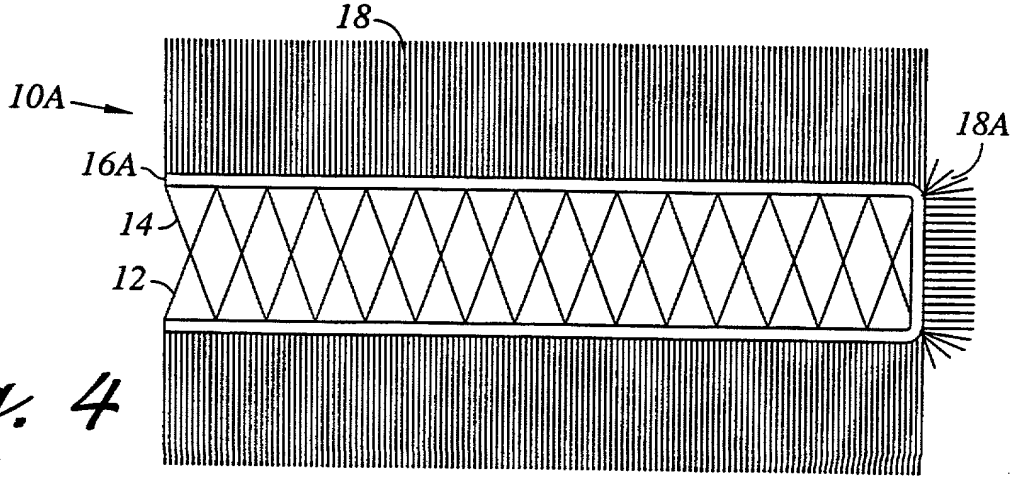

Fig. 4

Aortic Innovations, LLC, Exhibit 2126
Page 2126 - 238
IPR2023-01325, Edwards Lifesciences Corp. et al v. Aortic Innovations, LLC

Fig. 5

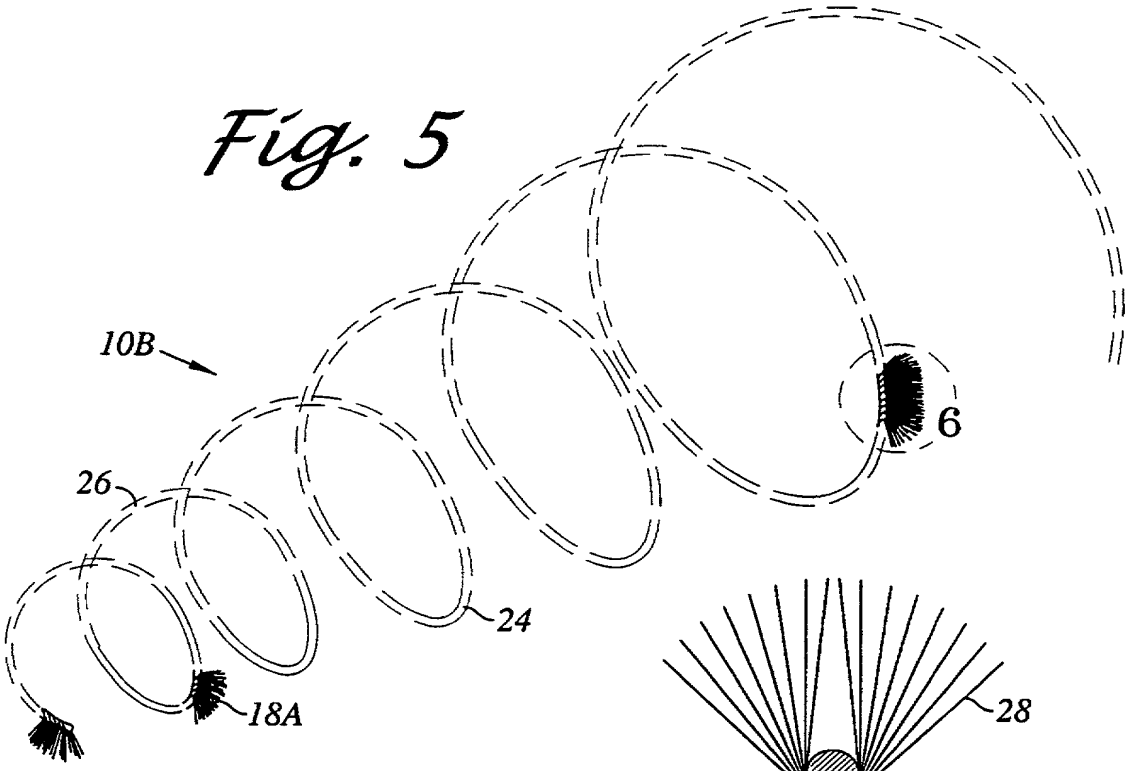

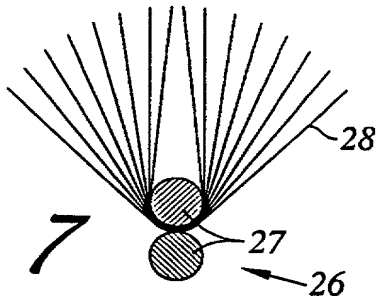

Fig. 7

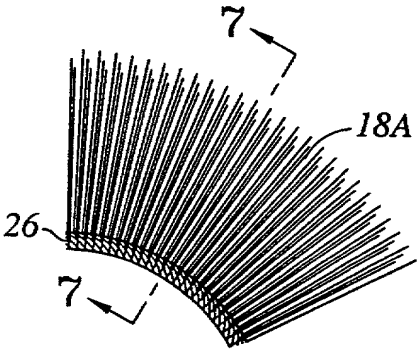

Fig. 6

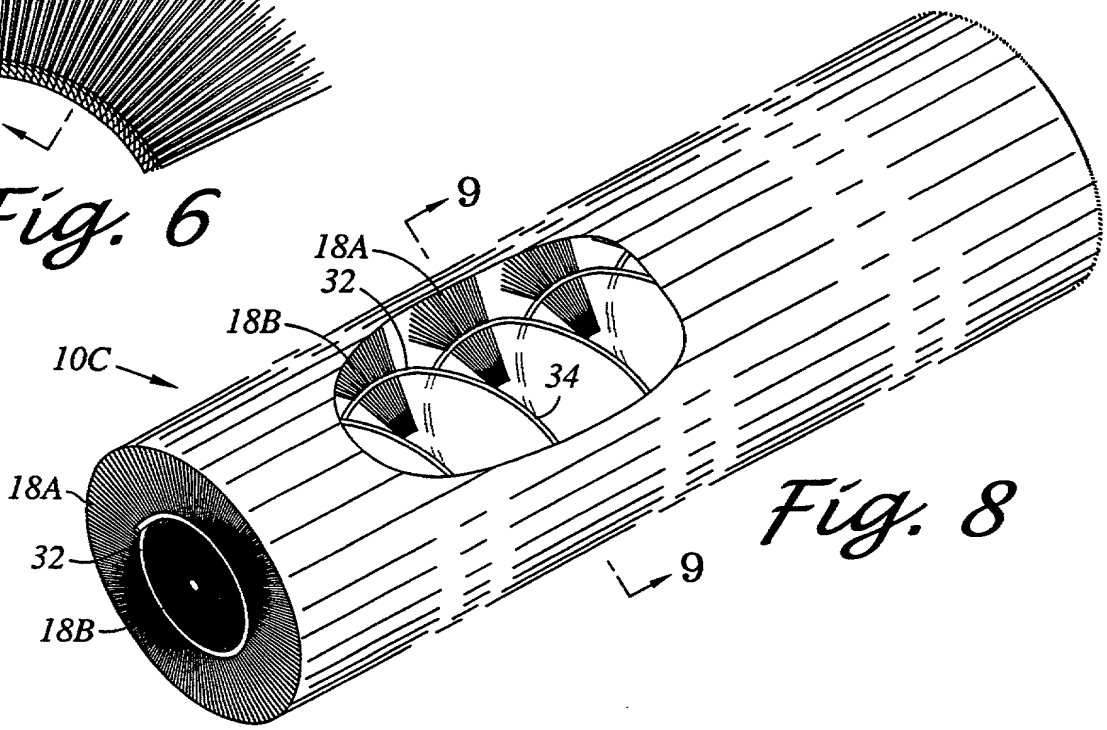

Fig. 8

Aortic Innovations, LLC, Exhibit 2126
Page 2126 - 239
IPR2023-01325, Edwards Lifesciences Corp. et al v. Aortic Innovations, LLC

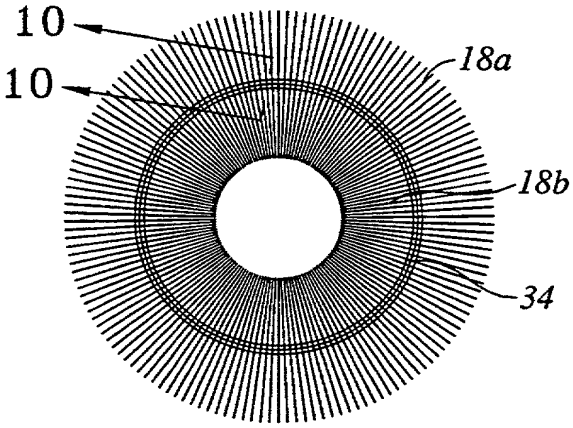

Fig. 9

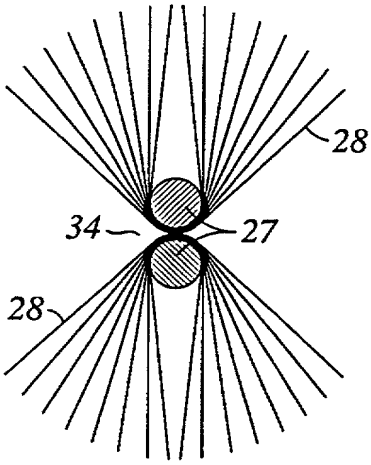

Fig. 10

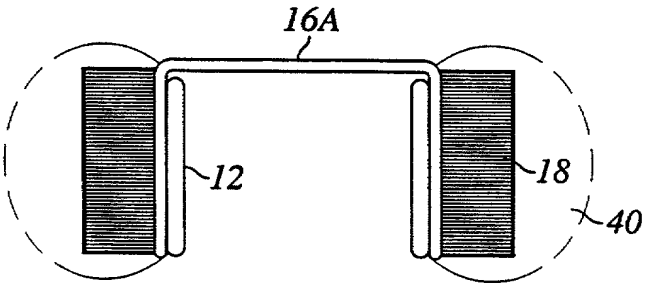

Fig. 11

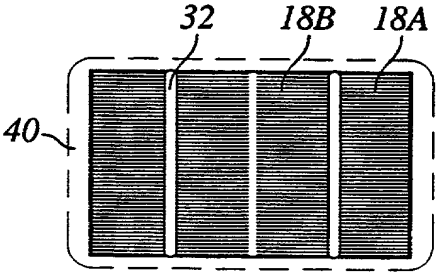

Fig. 12

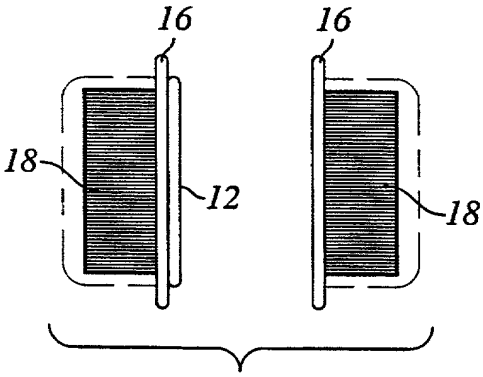

Fig. 13

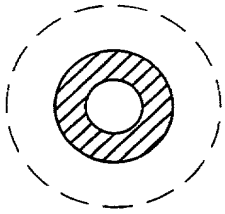

Fig. 14

Aortic Innovations, LLC, Exhibit 2126
Page 2126 - 240
IPR2023-01325, Edwards Lifesciences Corp. et al v. Aortic Innovations, LLC

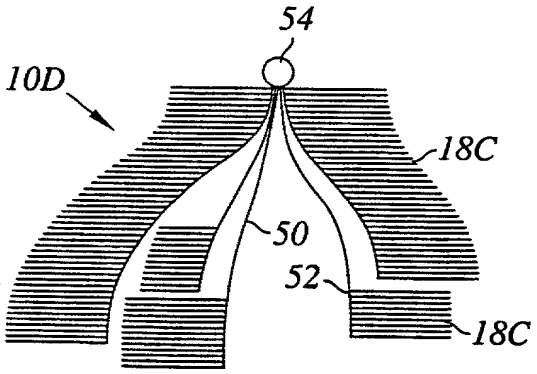

Fig. 15

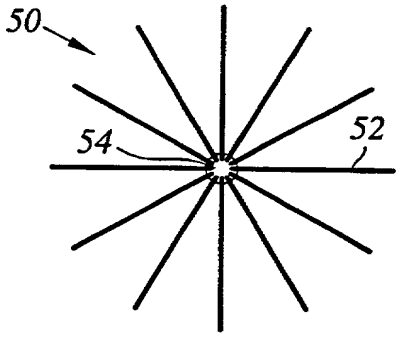

Fig. 16

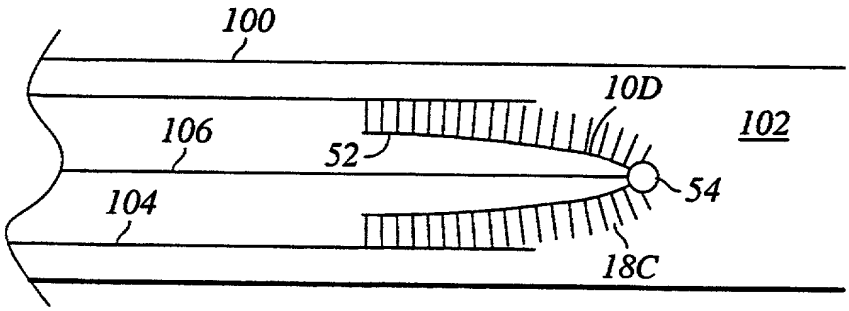

Fig. 17

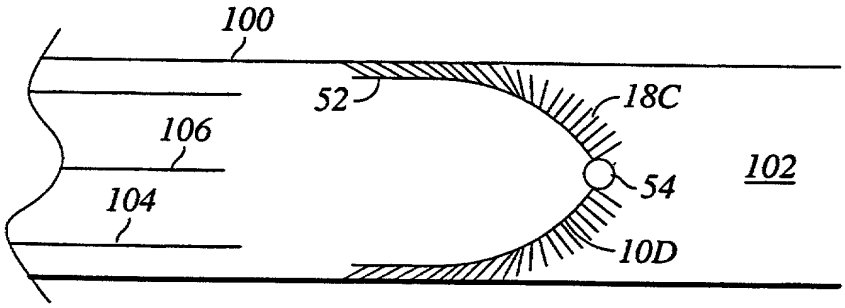

Fig. 18

Aortic Innovations, LLC, Exhibit 2126
Page 2126 - 241
IPR2023-01325, Edwards Lifesciences Corp. et al v. Aortic Innovations, LLC

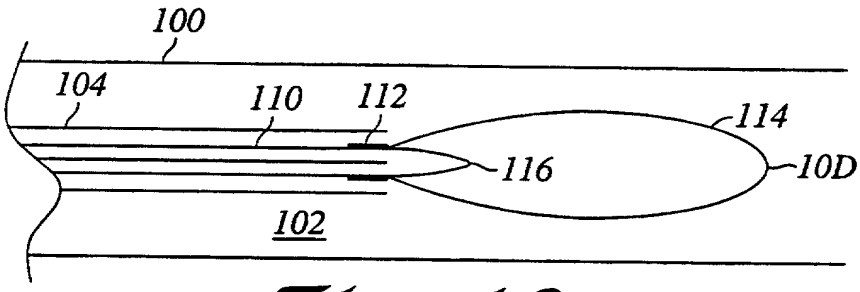

Fig. 19

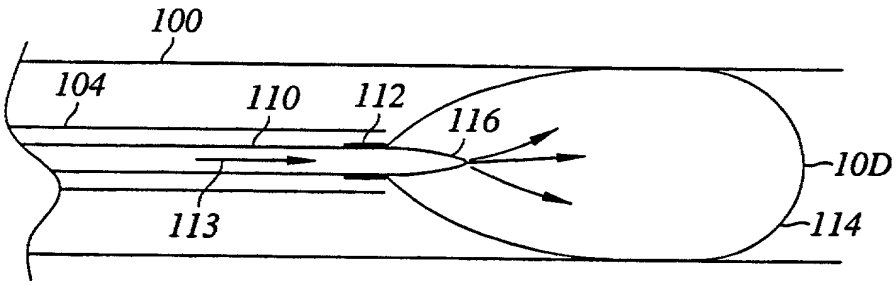

Fig. 20

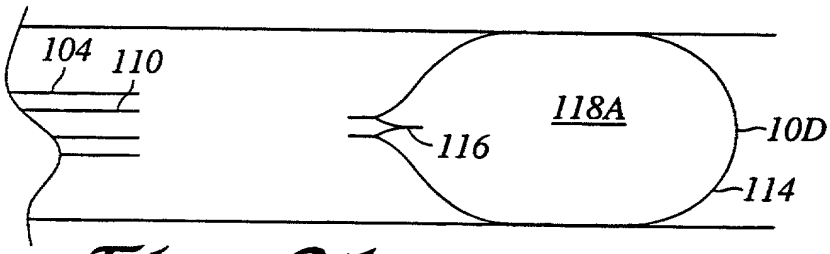

Fig. 21

Fig. 22

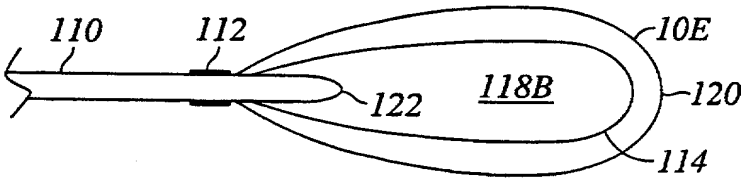

Aortic Innovations, LLC, Exhibit 2126
Page 2126 - 242
IPR2023-01325, Edwards Lifesciences Corp. et al v. Aortic Innovations, LLC

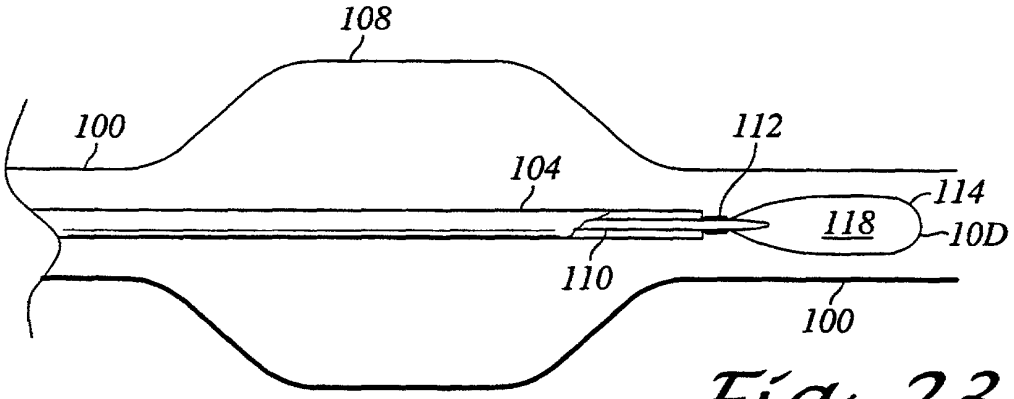

Fig. 23

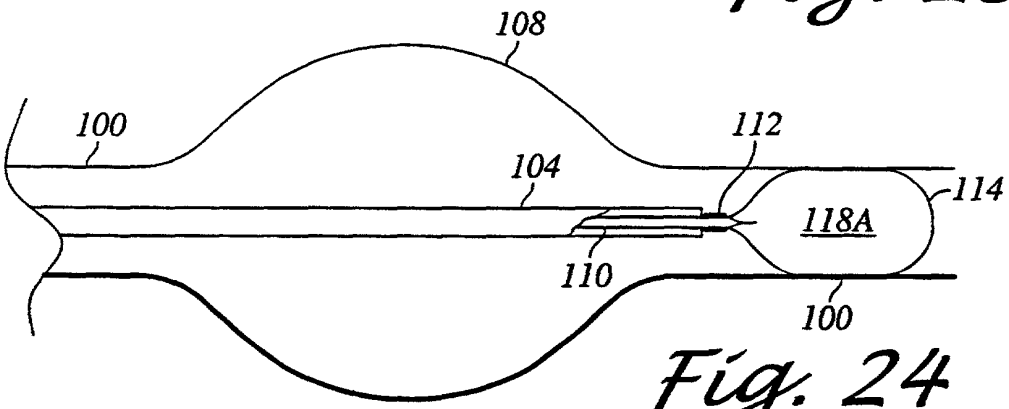

Fig. 24

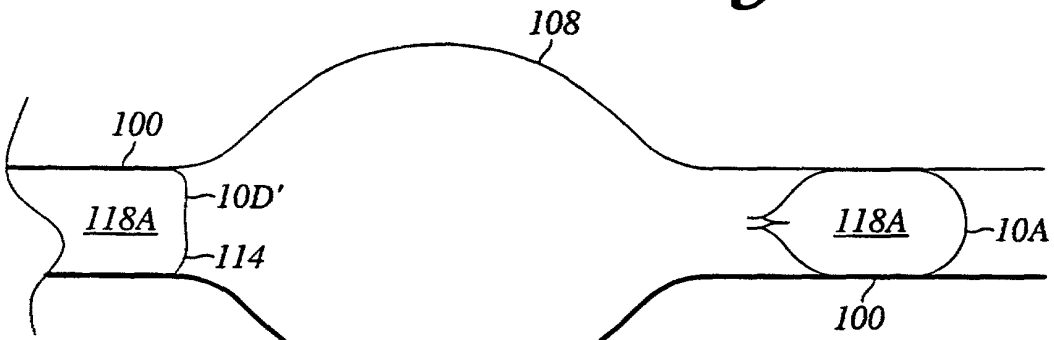

Fig. 25

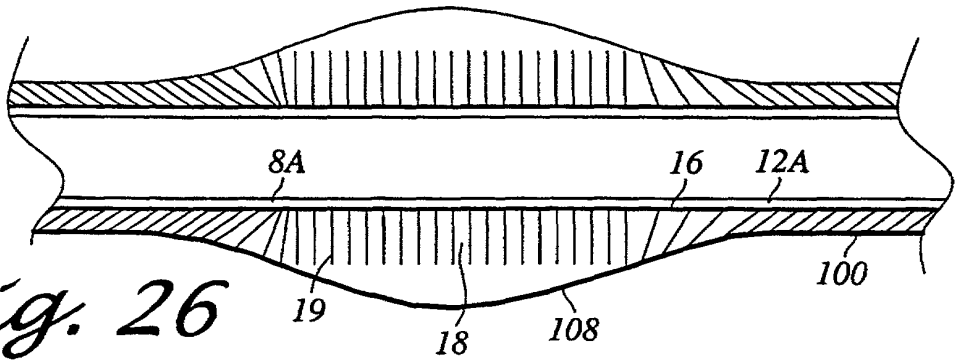

Fig. 26

Aortic Innovations, LLC, Exhibit 2126
Page 2126 - 243
IPR2023-01325, Edwards Lifesciences Corp. et al v. Aortic Innovations, LLC

PTO/PTO Rec'd 30 OCT 2001

LARGE VESSEL STENTS AND OCCLUDERS

Field of the Invention

This invention relates to intervascular stents for maintaining vascular patency in humans and animals, and to intervascular stents for occluding vascular members in humans and animals, and to hydroscopic plugs or occluders for vascular members.

Background of the Invention

Over the last fifteen years, great advances have been made in vascular surgery and treatment, including angioplasty balloon dilation of elastic vascular stenosis, application of a catheter mounted angioplasty balloon and intralumenal endovascular grafting employing intralumenal vascular grafts and stents.

The patents on endoprosthetsis devices, most commonly called stents, is extensive and includes the following U.S. patents: 4,503,569; 4,553,545; 4,580,568; 4,655,771; 4,733,665; 4,739,762; 4,830,003; 4,886,062; 4,913,141; 4,990,155; 5,015,253; 5,019,085; 5,019,090; 5,037,427; 5,104,404; 5,133,732; 5,135,536; 5,222,971; 5,226,913; and 5,370,683. The disclosures of these identified patents is hereby incorporated by reference. A number of prior art stents can be employed in the present invention including the stents disclosed in the Dotter U.S. 4,503,569; the Gianturco U.S. 4,580,568; the Wallsten U.S. 4,655,771; the Palmaz U.S. Re-Examination Certificate B1 4,733,665; the Palmaz U.S. 4,739,762; the Hillstead U.S. 4,913,141; the Wilkoff U.S. 4,990,155; Wiktor U.S. 4,886,062; the Fontaine U.S. 5,370,683; the MacGregor U.S. 5,015,253; Hillstead U.S. 5,019,085; Pinchuk U.S. 5,019,090; Haraka et al U.S. 5,037,427; Wolff U.S. 4,104,404; Wiktor U.S. 5,133,732; Hillstead U.S. 5,135,536; Willard et al. U.S. 5,222,971; Pinchuk U.S. 5,226,913; and Maass et al. U.S. 4,553,545.

The vascular system of humans and animals is a complex system made up of arteries, veins and capillaries. These vessels bend and curve through the body and have a generally circular shapes, but, cross sectional shapes of the vessels for a variety of reasons can be far from an idealized circular cross sectional area. In just a matter of a centimeter, a large vessel can change from a relatively circular cross sectional area to a markedly oval shape, then to a cusp cross sectional shape, and so on and so forth. It is not possible to custom make stents to fit a particular area of the vascular system and it is not possible to manufacture stents of all shapes and sizes and lengths to provide a stent

Aortic Innovations, LLC, Exhibit 2126
Page 2126 - 244
IPR2023-01325, Edwards Lifesciences Corp. et al v. Aortic Innovations, LLC

to fit each vascular system demand. Although the vascular system is relatively flexible, the areas requiring a prosthesis to repair vessels narrowed or occluded by disease, such as stenosis, restrictions, aneurysms, lesions, plaque, and the like, are not flexible. In those areas that are diseased, a vessel is relatively inflexible and an expanding stent will not reshape the vessel into a circular cross section to obtain a good fit between the expanded circular cross section stent and the interior wall of the vascular vessel. When the stent does not fit well within the interlumenal passageway of the vessel, blood can flow between the outer surface of the stent and the interlumenal surface of the vessel causing an area of turbulence which gives rise to clotting. Frequently these clots are not anchored securely and break free, and circulate to vital organs such as the lungs or brain.

Although stents are normally employed to enhance the patentcy of a vascular vessel, there are occasions when the vascular surgeon wishes to occlude a vascular vessel, such as when a severely damaged vessel is surgically bypassed with a bypass vessel. After the bypass vessel has proven to surgically taken at the point of incisions, the diseased and damaged portion of the vessel is then occluded to prevent future problems with that portion. In this instance, it is extremely important to cut off and occlude the damaged portion of the vessel to prevent all blood flow into it and through it to prevent future complications. Because of the diseased nature of the damaged portion of the vessel, the vessel is frequently very inflexible and has a very irregular shape which is not well adapted for employing tubular stent in an attempt to block off the vessel.

Abdominal aortic aneurysm is a dilation of the distal aorta, which can lead to rupture and fatal intra-abdominal hemorrhage. Conventional treatment involves replacement of the dilated segment with a durable fabric conduit, or graft. This is an effective treatment, but it involves major painful, debilitating and expensive surgery. An alternative endovascular method of treatment has recently been developed in which a graft is introduced in a remote artery and positioned and secured in the damaged portion of the aortic artery by the expansion of a metallic lattice, or stent, thereby isolating and occluding the aneurysm from aortic circulation and preventing rupture.

One of the commoner forms of endovascular exclusion involves implantation of a stent-graft from the aorta to the iliac artery in the side of the insertion. This leaves the other iliac artery as a potential route for arterial blood flow into the aneurysm unless the repair is also accompanied by some means of inducing iliac artery occlusion. Unfortunately, the iliac arteries are often large and irregular in patients with dilation of the aorta and none of the current endovascular devices that already exist are for the

Aortic Innovations, LLC, Exhibit 2126
Page 2126 - 245
IPR2023-01325, Edwards Lifesciences Corp. et al v. Aortic Innovations, LLC

occlusion of small to medium size arteries are suited for treatment of aneurysms in the iliac artery.

Stent-graft combinations and detachable balloons have also been used as arterial occluders. Unfortunately, these combinations and balloons have not fulfilled their role as arterial occluders very well.

Stent grafts are inserted with one or both ends of the graft sewed shut. If the stent has a high expansion ratio, that is, if it will expand radially outward from a first smaller diameter to a second larger diameter, then the stent graft is constructed to a thin-wall fabric, and it is possible to deliver a stent-graft large enough to occlude most iliac arteries. However, the constant diameter cylindrical profile of a stent-graft usually prevents the stent-graft from closing off the artery because of the surface irregularities commonly seen in the recipient artery which is already damaged. In most instances, gaps remained between the stent-graft and portions of the arterial inner wall. These gaps allow leakage of blood between the stent-graft and the artery. Thus the stent-graft fails to accomplish the purpose of damming off or walling off the aneurysm and the gap between the exterior surface of the stent-graft and the interior arterial wall frequently leads to complications resulting either from clot formation in the gap which escape from the gap and enter the lungs or delamination of the interior arterial wall surface.

Detachable balloons used for arterial occlusion suffer from several limitations. Several balloons are normally required to fill large arteries like the large iliac arteries commonly encountered in association with an aortic aneurysm. The balloons normally deflate with time leading to recurrent aneurysm perfusion, thus defeating the purpose of the balloon insertion.

Summary of the Invention

The present invention is directed to the use of an expanding stent, either self expanding or expandable, and a fiber pile on the outside of the stent to yield a stent which can be employed as an endovascular prosthesis for the repair of a damaged vascular vessel and/or for bridging damaged and/or diseased areas of a vascular vessel. The fiber pile is similar to carpet pile. In addition, the invention is directed to the use of expandable stents and a fabric pile to yield a endovascular occluding stent for sealing off a vascular vessel to induce the thrombosis of large arteries to seal off portions of the artery, especially damaged portions. Moreover, the present invention is directed to the use of expandable stents with a fabric pile exterior or sheath where the fabric pile is coated with

Aortic Innovations, LLC, Exhibit 2126
Page 2126 - 246
IPR2023-01325, Edwards Lifesciences Corp. et al v. Aortic Innovations, LLC

an expandable hydrophilic gel material. Furthermore, the invention is directed to a vascular plug employing hydrophilic material in a bag.

The endovascular prosthesis of the present invention comprises an expandable stent supporting an external elastic fabric pouch like graft, the stent adapted to be permanently expanded from a first diameter adapted to permit the vascular surgeon to position the stent into the desired area to a larger second diameter to cause contact of the outer circumferential wall of the stent with the lumenal wall of the vascular vessel and the graft, the graft adapted to radially expand with the stent, the graft having a fiber pile on its external surface about the tubular side wall of the stent, the graft made of fiber adapted to form a foundation for tissue growth between the lumenal wall and the endovascular prosthesis to incorporate the endovascular prosthesis with the vascular vessel. Virtually any expanding stent can be used in this embodiment.

The endovascular prosthesis of the present invention can also be employed to occlude the lumen of a vascular vessel. The endovascular prosthesis comprises a generally tubular shaped expandable stent adapted to be permanently expanded from a first diameter which is suitable for insertion of the stent into the lumen of a vascular vessel to a larger second diameter to obtain contact with the lumenal wall of the vascular vessel and a cylindrical flexible graft having an open end and closed opposing end. The cylindrical flexible graft is adapted to radially expand with the stent. The closed end of the cylindrical graft extending over one end of the tubular stent and sealing off the end of the stent. The graft having a fabric pile adapted to form a foundation for tissue growth between the fabric pile of the graft and lumenal wall of the vascular vessel. The graft adapted to induce thrombosis between the lumen of the vascular vessel and the prosthesis to occlude said vessel. Virtually any expanding stent can be used in this embodiment. The flexible graft can also have both ends closed.

The endovascular prosthesis can also comprise a generally conical-shaped expandable stent adapted to be expanded from a first diameter which is suitable for insertion of the stent into a lumen of a vascular vessel to a larger second diameter to obtain contact with the lumenal wall of the vascular vessel and a generally conical-shaped flexible graft having an open end and a closed opposing end. The generally conical-shaped flexible graft is adapted to radially expand with the stent. The generally radially shaped expandable stent has one end with a smaller diameter and the opposing ends with a larger diameter. In the preferred embodiment, the stent prior to radial expansion has close to a tubular shape and expansion is progressively greater at one end, the larger

Aortic Innovations, LLC, Exhibit 2126
Page 2126 - 247
IPR2023-01325, Edwards Lifesciences Corp. et al v. Aortic Innovations, LLC

diameter end, of the stent. Similarly, the generally conical-shaped flexible graft has a larger diameter end and an opposing smaller diameter end. Normally, the smaller diameter opposing end is the one that is sealed off. However, both ends of the cylindrical graft can be closed off. The graft has a fabric pile adapted to form a foundation of tissue growth between the fabric pile of the graft and the lumenal wall of the vascular vessel.

In another embodiment, the fabric pile of the above stent graft can be coated with a pharmaceutically acceptable hydrophilic polymeric gel. The stent graft with such a coating is utilized in the vascular system in at least a partially dehydrated state. The body fluids, primarily blood, will hydrate the hydrophilic polymer gel, expanding the gel to aid in further sealing any gaps between the lumenal wall of the vascular vessel and the stent graft. The fabric pile can be coated with the hydrophilic gel so that each strand of the fabric pile is coated, or the fabric pile can be encapsulated in a thick layer of the hydrophilic gel which completely surrounds the fabric pile, or the strands of the fabric pile can have one or more beads of hydrophilic gel attached to the strands.

In another embodiment, the endovascular prosthesis can comprise a generally tubular shape expandable stent adapted to be permanently expanded from a first diameter which is suitable for insertion of the stent into the lumen of a vascular vessel to a larger second diameter to obtain contact with a lumenal wall of the vascular vessel and a cylindrical flexible graft covering the tubular side wall of the stent and having open ends at both ends. The cylindrical flexible graft is adapted to radially expand with the stent. The cylindrical graft only covers the outer tubular wall of the stent leaving the ends of the stent open to permit the flow of blood. This endovascular prosthesis can be used to bridge an aneurysm or other damaged area of a vessel to permit blood to flow and bypass the damaged area.

The endovascular stent for the repair of vascular vessel can also comprise a generally tubular stent member which can be made of at least one helicially wound wire, each wire comprised of at least two twisted strands, the twisted strands securing fibers, the fibers extending radially outward from the stent to form a fiber pile, the fiber pile adapted to form a foundation for tissue growth between the fiber pile and the lumenal wall of a vascular vessel. The twisted strands can also secure fibers extending radially inwardly to form an inner fiber pile. The fibers of this endovascular stent can be coated with a pharmaceutically acceptable hydrophilic gel as described above.

The endovascular stent for occluding the lumen of a vascular vessel can comprise a generally conical member having a lesser diameter at one end and a larger diameter at

Aortic Innovations, LLC, Exhibit 2126
Page 2126 - 248
IPR2023-01325, Edwards Lifesciences Corp. et al v. Aortic Innovations, LLC

the other end made of at least one helically wound wire, the wire comprising of at least two twisted strands, the twisted strands securing fibers to form a fiber pile extending outwardly from the stent and optionally extending inwardly into the stent to substantially occlude the inner bore of the stent. Prior to permanently radially expanding the stent, the stent preferably has a more tubular shape than conical shape and expansion occurs more progressively at one end, the larger diameter end, of the stent. The fiber pile forming a foundation for tissue growth between the fiber pile and the surrounding lumenal wall of the vascular vessel and for tissue growth in the bore of the stent to cause occlusion of the vessel.

The endovascular stent can be comprised of two or more wire helicals, with one group of wires wound in one direction, such as left hand direction, and the other group of wires wound in the opposite direction, that is the right hand direction, to form an interweaving structure stent. Optionally, the helically wound wires can be woven or braided so that a particular wire crosses over and crosses under other wires in a predetermined pattern.

Another embodiment of the present invention, the endovascular prosthesis is a stent for occluding a vascular lumen comprising a generally umbrella-shaped member having a plurality of radial wire ribs biased to extend radially outward, each wire ribs comprising of at least two twisted strands. The twisted strands supporting and securing fibers which extend outwardly from the wire ribs to form a fiber pile, the fiber pile adapted to form a foundation for tissue growth between the fiber pile and the entire circumferential lumenal wall surface. Optionally, fibers can also extend inwardly to form a fiber pile in the interior of the stent. The fibers of this endovascular stent can be coated with a pharmaceutically acceptable hydrophilic gel as described above.

The stents that can be employed in the present invention include self expanding stents which are inserted into the lumen of the vascular vessel in a compressed state and when released, expand on their own. Alternatively, stents can be employed which can be expanded either employing balloons or employing stents which are rotated about their longitudinal axis or contracted along their longitudinal axis to increase the diameter of the stent.

The fibers of the fiber pile are biocompatible fibers which are known to the art. Suitable fibers include nylon fibers, polyester fibers, Mylar brand fibers and the like. The pharmaceutically acceptable hydrophilic gels are polymeric materials, either natural or synthetic, which are compatible with mammal body tissues and fluids. The

Aortic Innovations, LLC, Exhibit 2126
Page 2126 - 249
IPR2023-01325, Edwards Lifesciences Corp. et al v. Aortic Innovations, LLC

pharmaceutically acceptable hydrophilic gels can be fully dehydrated for insertion into the vascular vessel, or they can be partially hydrated for insertion into the vascular vessel. When the graft stent having a coating of hydrophilic gel is positioned within the vascular vessel, the body fluids, primarily blood, will hydrate the hydrophilic gel completely to fully expand the gel. The hydrophilic gel is not soluble in the body fluids or blood. The hydrophilic gel is nontoxic. The hydrophilic gel adheres to the fibers of the fiber pile by mechanical and/or chemical adherence.

In the preferred embodiment of the present invention, the fiber pile is coated with a hydrophilic polymeric gel. The fiber pile is coated with a polymeric hydrophilic gel which is allowed to partially dry. The coated fibers are then "combed" downwardly to reduce the overall outer diameter of the stent to the greatest extent possible for ease of insertion through a catheter into the lumen of the vascular vessel. The partially dried gel is then preferably fully dried to reduce the volume of the gel to the greatest extent. The stent with the fiber pile and dried gel coating are sterilized in the conventional manner. When the surgeon prepares the stent for insertion into the lumen of the vascular vessel, the dried gel can be wetted with sterile saline or water which partially hydrates the gel and lowers its coefficient of friction for insertion into the vascular lumen. In its final place of disposition in the vascular system, the gel absorbs water from blood, blood serum, blood plasma, and the like. Prior to expanding the stent from the first diameter to the second diameter, the stent can be maintained in position for a few minutes to allow the gel to more fully hydrate in the fluid environment. As the gel to becomes more fully wetted, it expands in volume. Preferably, the gel promotes thrombosis in order to aid in the sealing and securing the surface of the stent graft to the internal lumenal wall. The thrombosis also encourages tissue growth so that eventually the stent and the graft become incorporated into the wall of the vascular vessel. A biologically acceptable nontoxic hydrophilic gel is employed in the present invention, such as hydrophilic acrylates, polyvinyl pyrolidones, carboxylic acrylic polymers and co-polymers, polyurethanes and natural gels known to the art. Suitable gels are identified in U.S. patents 5,331,027; 5,443,907; and 5,490,839. The disclosures of these patents are incorporated herein by reference.

Fiber of the fabric pile and the gel are selected so that the gel remains adhered to the fibers and does not migrate away from the fibers into the bloodstream. Most of the biological fibers are made of polymeric materials which are not highly polarized. Accordingly, such fibers frequently have to be coated with a primer which adheres to the

Aortic Innovations, LLC, Exhibit 2126
Page 2126 - 250
IPR2023-01325, Edwards Lifesciences Corp. et al v. Aortic Innovations, LLC

fiber and yet has a polar constituent which attracts the polar constituents of the gel. Alternatively, the fibers can be treated with electric discharge or plasma discharge before being coated with the gel to present a polarized surface environment to attract and secure the gel to the fiber.

The stents of the present invention that employ a graft can extend the full length of the graft. The graft pouch, sock or sleeve can extend beyond one end or both ends of the stent. The graft pouch or sock, or can be shorter or longer than the stent.

In another embodiment of the present invention, vascular vessel is occluded with a bag filled with a solid. In one embodiment, the bag is semi-permeable and is inserted into the vascular vessel in the empty state through a catheter. When bag is positioned, a slurry of particulate solid and saline or water is pumped through a delivery tube attached to the bag. The slurry comprises pharmaceutically acceptable materials. Some of the particles are preferably at least a partially dehydrated hydrophilic gel or a water-activated cement. An expandable impervious bag can also be employed. The impervious bag can be filled with polymeric gel aqueous slurry which expands and gels upon sitting, occluding the vessel. The empty bag attached to the end of a delivery tube is inserted into and positioned in the vascular vessel through a catheter. The slurry is pumped into the deflated bag and allowed to set up to form an expanded insoluble mass. The polymeric gel material is pharmaceutically acceptable and compatible with the body's tissues and fluids. After the polymeric material is set up into a solid mass, the delivery tube is disconnected from the bag and removed from the vascular system. The bags are filled and expanded to the point where they occlude the vascular vessel and form a permanent wall which seals off the vascular vessel.

In an alternative embodiment of the present invention, the occluder comprises a dual bag construction with an outer elastic impervious bag and an inner semi-pervious elastic bag. The dual bag is attached to a delivery tube for filling the inner semi-permeable bag. After the bag has been positioned in the arterial vessel, water or saline solution is delivered through the delivery tube into the inner bag to expand the at least partially dehydrated hydrophilic polymeric gel granules in the bag by hydration. As the gel granules expand from hydration, the inner bag expands against the inner wall of the outer bag and expands the outer bag to come in contact with the inner wall of the arterial vessel to occlude the vessel. After the inner bag is fully hydrated and expanded to its maximum dimensions, the delivery tube is separated from the dual bag and removed through the catheter from the arterial system.

Aortic Innovations, LLC, Exhibit 2126
Page 2126 - 251
IPR2023-01325, Edwards Lifesciences Corp. et al v. Aortic Innovations, LLC

Brief Description of the Drawings

Fig. 1 is a perspective view of a graft of the present invention;

Fig. 2 is a cross-sectional view of Fig. 1;

Fig. 3 is an enlarged sectional view of Fig. 2;

Fig. 4 is a cross-sectional view of an occluder of the present invention;

Fig. 5 is a partial perspective view of another occluder of the present invention;

Fig. 6 is a partial enlarged view of circled line 6 of Fig. 5;

Fig. 7 is a enlarged cross-sectional view taken along lines 7-7 of Fig. 6;

Fig. 8 is a perspective view of another occluder of the present invention;

Fig. 9 is an end view of the occluder of Fig. 8;

Fig. 10 is an enlarged cross-sectional view taken along lines 10-10 of Fig. 9;

Fig. 11 is a cross-sectional view of another embodiment of the occluder of Fig. 4;

Fig. 12 is a cross-sectional view of another embodiment of the occluder similar to the occluder of Fig. 8;

Fig. 13 is a cross-sectional view of another embodiment of graft of the present invention similar to the graft of Fig. 1;

Fig. 14 is an end view of another embodiment of the graft of Fig. 1;

Fig. 15 is a fragmentary side view of another embodiment of the occluder of the present invention;

Fig. 16 is an end view of the stent frame of the occluder of Fig. 15;

Fig. 17 is a cross-sectional view showing the insertion and positioning of the occluder of Fig. 15 into an arterial system;

Fig. 18 is a cross-sectional view of the occluder of Fig. 15 positioned in an arterial system;

Fig. 19 is a cross-sectional view showing the insertion and positioning of another occluder of the present invention into an arterial system;

Fig. 20 is cross-sectional view showing the placement of the occluder of Fig. 19 into the arterial system;

Fig. 21 is a cross-sectional view showing the final placement of the occluder of Fig. 19 into the arterial system;

Fig. 22 is another embodiment of the occluder of the present invention;

Fig. 23 is a cross-sectional view showing the occlusion of one end of an aneurysm in an arterial system with the occluder of the present invention;

Aortic Innovations, LLC, Exhibit 2126
Page 2126 - 252
IPR2023-01325, Edwards Lifesciences Corp. et al v. Aortic Innovations, LLC

Fig. 24 is a cross-sectional view showing the placement of the occluder of Fig. 23 in the arterial system;

Fig. 25 is a cross-sectional view showing the sealing off of an aneurysm with the occluders of Fig. 23; and

Fig. 26 is a cross-sectional view showing the bridging of an aneurysm with the stent graft of the present invention.

Detailed Description of the Invention

Referring to Figs. 1-3, the graft 8 comprises a stent 12 comprising wires 14 helically wound into a stent frame supporting a fabric pile backing 16. Extending circumferentially outwardly from the backing 16 is a fabric pile 18 made up of individual fibers 19. The graft has a longitudinal lumen or bore 20 extending its length to permit blood flow.

Referring to Fig. 4, the occluder 10A comprises a stent 12 having wires 14 forming a stent frame which supports a sock fabric pile backing 16A. A fabric pile 18 made up of individual threads extends circumferentially from the longitudinal portion of the fabric pile backing and fabric pile 18A made up of fiber threads extending from the end of the fabric pile backing sock.

Referring to Figs. 5-7, the conical shaped occluder 10B comprises a conical shaped stent 24 comprising at least one helically wound double wire strand 26. The wire strand 26 comprises of at least two wires 27 which are twisted (not shown). Fabric thread 28 which makes up the fabric pile 18A is inner-disposed between the wire strands 27 so that the fabric pile extends outwardly from the stent to form a conical shaped fabric pile device.

Referring to Figs. 8-10, the occluder 10C comprises a stent 32 made up of a helical wire frame and comprising a wire strand 34 similar in cross section to the wire strand 26 shown in Fig. 7. However, the wire strand has fabric threads 28 extending both outwardly and inwardly circumferentially of the stent (see Figs. 9 and 10) to form fabric piles extending outwardly from the occluder and inwardly of the stent to form a fabric pile "plug."

Referring to Figs. 11-13, these figures schematically illustrate in cross section the occluder of Fig. 4 and Figs. 8-10 and the graft of Fig. 1-3. The fabric pile is coated with hydrated hydrophilic gel 40 shown in phantom. After the gel is applied and saturated into the fabric pile, the gel is partially dehydrated by conventional means, such as elevated

Aortic Innovations, LLC, Exhibit 2126
Page 2126 - 253
IPR2023-01325, Edwards Lifesciences Corp. et al v. Aortic Innovations, LLC

temperature preferably under a vacuum to dehydrate the gel, which makes the gel shrink and thicken. The gel can be further dehydrated to a dry state. Suitable hydrophilic gel is described in the summary of the invention. Prior to inserting the occluder or graft into the vascular system, the occluder or graft is wetted in order to partial hydrate the gel to make the outer surface of the occluder or graft more slippery. Once the occluder or graft is positioned in the vascular system through a catheter, the occluder or graft is positioned into the appropriate area of the arterial system employing a catheter, water from the blood stream, blood serum and/or blood plasma fully hydrates the gel. The gel fills any gaps between the inner luminal wall of the arterial system and the outer surface of the fabric pile to form a seal between the luminal wall and the occluder or graft.

Figs. 15-18 show another embodiment of the occluder of the present invention. This is an umbrella stent occluder 10D. The occluder 10D has a generally umbrella-shape; the supporting stent 50 has a plurality of ribs 52 radially extending from a central body 54. The ribs are biased to extend outwardly like extending umbrella ribs in its full open position. Each rib is made up of at least two twisted wires similar in cross section shown in Fig. 7. The twisted wires support therebetween fabric threads 28 which form the fabric pile 18C of the occluder. When the occluder is to be inserted into the arterial system, a catheter is positioned by known methods into the desired area of the arterial system. The occluder 10D is compressed like an umbrella to a minimal diameter and pushed through the catheter by a wire or flexible rod 106. When the occluder 10D is pushed out of the end of the catheter, it expands outwardly like an umbrella opening to have the fabric pile 18C press against the inner luminal wall of the arterial system to form a seal. The stent 50 has a plurality of ribs 52 and sufficient fabric pile to form sufficient matrix to close off the arterial vessel from blood flow.

Referring to Figs. 19-21, the procedure for utilizing one of the occluders of the present invention is illustrated showing its insertion, positioning and placement within an arterial vessel. A catheter 104 is first extended into the arterial system from a distal arterial branch by known methods. Once the catheter is positioned in a desired position, the occluder 10D which comprises semipermeable bag 114, having a one-way valve, such as a leaf valve 116 which is secured to a delivery tube 110 by a releasable bond 112, is inserted in the distal end of the catheter and pushed through the catheter out into the arterial stream. A slurry of particulate solid and saline or water is pumped through the delivery tube 110 through the leaf valve 116 into the interior of the bag 114. The particles can be made up of inert solid material such as silica particles and the like. A binder is

Aortic Innovations, LLC, Exhibit 2126
Page 2126 - 254
IPR2023-01325, Edwards Lifesciences Corp. et al v. Aortic Innovations, LLC

included to bind the particles when in place. The binder is water activated. Preferably, at least some of the binder are particles of dehydrated hydrophilic gel. If inert particles are used, preferably a biocompatable adhesive is also placed in the slurry to bind the particles once they are in place in the bag 114. The use of dehydrated hydrophilic gel particles is preferred because once they are in the bag and have an opportunity to be hydrated by the water or saline, they expand, helping to fill or filling the bag and pushing the outer walls of the bag against the inner luminal wall of the arterial system. Once the surgeon makes the determination that the bag is filled through X-ray observation, delivery of the slurry is ceased and a slight suction is applied to the delivery tube to close off a one-way valve, such as a leaf valve 116. The releasable bond 112 is a material that will be dissolved or broken by the blood stream. Once the bond has dissolved or has been broken down by the blood stream, the delivery tube is withdrawn. Optionally, the delivery tube and the catheter can be removed simultaneously. Optionally, the bag can have an outer fabric pile similar to the graft and occluders shown in Figs. 1-18. The bag can be a fabric bag or semipervious membrane which permits the diffusion of water across the bag envelope.

Referring to Fig. 22, an alternative embodiment occluder 10E is illustrated. Occluder 10E is utilized in the same manner as occluder 10D. However, some of the operational steps are different. Occluder 10E has an impervious outer bag 120, such as a rubber bag or other elastic flexible material bag. Within the bag, there is situated a semipermeable bag 114. Occluder 10E, when inserted into the catheter and inserted into the vascular system, has bag 114 filled with dehydrated hydrophilic gel granules 118B. When occluder 10E has been positioned in the arterial system in the same manner as occluder 10D, water is inserted through the delivery tube 110 through water pervious filter finger 122 into bag 114. The water hydrates the dehydrated hydrophilic gel 118B expanding the gel which expands bag 114 against bag 120 forcing the outer wall of bag 120 against the inner surface of the arterial vessel to occlude the vessel off. Water can migrate across the envelope of semipermeable bag 114 to permit bag 114 to completely fill the envelope bag 120. As in the same manner as occluder 10D, the blood stream dissolves or breaks down the detachable bond 112 permitting the delivery tube 110 to be freed from the occluder 10E.

The graft of Figs. 1-3 and 13 and the occluders of Figs. 4-12 and 14-16 are all delivered through catheters. The catheters are first positioned in the arterial system at the desired point of insertion of the graft or occluder. The distal end of the catheter is

Aortic Innovations, LLC, Exhibit 2126
Page 2126 - 255
IPR2023-01325, Edwards Lifesciences Corp. et al v. Aortic Innovations, LLC

inserted into the arterial system through a distal branch of the arterial system. This will normally be one of the arteries in the legs or in the arms. Insertion and placement of the catheter is followed by known X-ray techniques. The graft of Figs. 1-3 and 13 and the occluders of Figs. 4-12, 15 and 16 are compressed when placed into the catheter. The compression compresses the stent and pushes down the fabric pile. The graft and occluders are pushed through the catheters employing wires having enlarged ends to engage the end of the graft or occluder without passing through the graft or occluder or with large rods which can engage the ends of the graft or occluder without passing through the graft or occluder. When the graft or occluder is pushed out of the proximal end of the catheter at the area where it is to be positioned and placed, the self-expanding stent expands circumferentially outward to expand the diameter of the graft and occluder to ensure contact between the fabric pile and the entire inner surface of the arterial vessel. Alternatively, expandable stents can also be employed. There may be situations because of the highly irregular shape of the interior wall of the arterial system that small gaps form. In those cases, the hydrophilic gel can assist in filling the gaps.

Referring to Figs. 23-25, this illustrates a method for closing off an aneurysm which has been bypassed with a bypass vessel as is well known to the art. At the proximal end of the aneurysm in an area where the vascular wall has integrity and can be closed off is closed off, the vascular vessel is closed off with an occluder 10D although the occluders of 10A through 10E can also be used. The catheter 104 is positioned in the area where the occluder has to be positioned and placed, the occluder with its delivery tube 110 is inserted in the distal end of a catheter, pushed through the catheter and out the proximal end of the catheter at the desired location. The slurry of water and particulates are pumped through the delivery tube 110 into the bag 114 to enlarge the bag and have the bag complete occlude off the arterial vessel as described above. Preferably the slurry is a slurry of water or saline and hydrophilic gel particles. The surgeon waits for the blood to break apart or dissolve the detachable bond 112 to permit withdrawal of the delivery tube 112 and the catheter. The same operation is repeated to the vascular vessel at the distal end of the aneurysm. The surgeon chooses an area of the arterial vessel that has good integrity that can be safely and securely occluded. Occluder 10D′ is positioned and inplaced in the same manner as occluder 10D was positioned and inplaced at the proximal end of the aneurysm. Thus, by bypassing the aneurysm with known techniques and occluding off the aneurysm from the vascular system, the life-threatening problem associated with a bursting aneurysm is eliminated.

Aortic Innovations, LLC, Exhibit 2126
Page 2126 - 256
IPR2023-01325, Edwards Lifesciences Corp. et al v. Aortic Innovations, LLC

Fig. 26 shows the use of the stent graft 8A of the present invention used to bridge an aneurysm 108 in a vascular vessel 100. Stent graft comprises a tubular stent 12A which can be permanently expanded from a first diameter to a second larger diameter, an expandable graft 16 surrounding the tubular wall of the stent. The expandable graft has a fabric pile backing 16 of individual fibers 19. The stent graft is positioned in the vascular vessel, expanded to seat the stent graft in the vascular vessel and bridge the aneurysm 108. Individual fibers 19 of the fabric pile backing fill the gaps between the outer wall of the expandable graft and the inner wall of the vascular vessel. Preferably, the fabric pile has been coated with a hydrophilic polymeric gel which expands when wetted and fills the gaps.

Aortic Innovations, LLC, Exhibit 2126
Page 2126 - 257
IPR2023-01325, Edwards Lifesciences Corp. et al v. Aortic Innovations, LLC

Express Mail No. EL880696669US

FORM PTO-1390 (REV. 3-2000) U.S. DEPARTMENT OF COMMERCE PATENT AND TRADEMARK OFFICE

TRANSMITTAL LETTER TO THE UNITED STATES DESIGNATED/ELECTED OFFICE (DO/EO/US) CONCERNING A FILING UNDER 35 U.S.C. 371

ATTORNEY'S DOCKET NUMBER: C010-1001A-US

U.S. APPLICATION NO. (If known, see 37 CFR 1.5): 10/018164

INTERNATIONAL APPLICATION NO.	INTERNATIONAL FILING DATE	PRIORITY DATE CLAIMED
PCT/US01/06632	02 March 2001(02.03.01)	03 March 2000(03.03.00)

TITLE OF INVENTION: LARGE VESSEL STENTS AND OCCLUDERS

APPLICANT(S) FOR DO/EO/US: CHUTER, TIMOTHY A.M.

JC20 Rec'd PCT/PTO 30 OCT 2001

Applicant herewith submits to the United States Designated/Elected Office (DO/EO/US) the following items and other information:

1. [X] This is a **FIRST** submission of items concerning a filing under 35 U.S.C. 371.
2. [ ] This is a **SECOND** or **SUBSEQUENT** submission of items concerning a filing under 35 U.S.C. 371.
3. [X] This is an express request to begin national examination procedures (35 U.S.C. 371(f)). The submission must include items (5), (6), (9) and (21) indicated below.
4. [ ] The US has been elected by the expiration of 19 months from the priority date (Article 31).
5. [X] A copy of the International Application as filed (35 U.S.C. 371(c)(2))
   a. [X] is attached hereto (required only if not communicated by the International Bureau).
   b. [X] has been communicated by the International Bureau.
   c. [X] is not required, as the application was filed in the United States Receiving Office (RO/US).
6. [ ] An English language translation of the International Application as filed (35 U.S.C. 371(c)(2)).
   a. [ ] is attached hereto.
   b. [ ] has been previously submitted under 35 U.S.C. 154(d)(4).
7. [ ] Amendments to the claims of the International Aplication under PCT Article 19 (35 U.S.C. 371(c)(3))
   a. [ ] are attached hereto (required only if not communicated by the International Bureau).
   b. [ ] have been communicated by the International Bureau.
   c. [ ] have not been made; however, the time limit for making such amendments has NOT expired.
   d. [ ] have not been made and will not be made.
8. [ ] An English language translation of the amendments to the claims under PCT Article 19 (35 U.S.C. 371 (c)(3)).
9. [X] An oath or declaration of the inventor(s) (35 U.S.C. 371(c)(4)). (unsigned)
10. [ ] An English lanugage translation of the annexes of the International Preliminary Examination Report under PCT Article 36 (35 U.S.C. 371(c)(5)).

Items 11 to 20 below concern document(s) or information included:

11. [ ] An Information Disclosure Statement under 37 CFR 1.97 and 1.98.
12. [ ] An assignment document for recording. A separate cover sheet in compliance with 37 CFR 3.28 and 3.31 is included.
13. [ ] A FIRST preliminary amendment.
14. [ ] A SECOND or SUBSEQUENT preliminary amendment.
15. [ ] A substitute specification.
16. [ ] A change of power of attorney and/or address letter.
17. [ ] A computer-readable form of the sequence listing in accordance with PCT Rule 13ter.2 and 35 U.S.C. 1.821 - 1.825.
18. [ ] A second copy of the published international application under 35 U.S.C. 154(d)(4).
19. [ ] A second copy of the English language translation of the international application under 35 U.S.C. 154(d)(4).
20. [ ] Other items or information:

JC05 Rec'd PCT/PTO 30 OCT 2001

U.S. APPLICATION NO. (if known, see 37 CFR 1.5) 10/018164	INTERNATIONAL APPLICATION NO.	ATTORNEY'S DOCKET NUMBER

21. ☐ The following fees are submitted:	CALCULATIONS PTO USE ONLY	
BASIC NATIONAL FEE (37 CFR 1.492 (a) (1) - (5)):		
Neither international preliminary examination fee (37 CFR 1.482) nor international search fee (37 CFR 1.445(a)(2)) paid to USPTO and International Search Report not prepared by the EPO or JPO **$1000.00**		
International preliminary examination fee (37 CFR 1.482) not paid to USPTO but International Search Report prepared by the EPO or JPO **$860.00**		
International preliminary examination fee (37 CFR 1.482) not paid to USPTO but international search fee (37 CFR 1.445(a)(2)) paid to USPTO **$710.00**		
International preliminary examination fee (37 CFR 1.482) paid to USPTO but all claims did not satisfy provisions of PCT Article 33(1)-(4) **$690.00**		
International preliminary examination fee (37 CFR 1.482) paid to USPTO and all claims satisfied provisions of PCT Article 33(1)-(4) **$100.00**		
ENTER APPROPRIATE BASIC FEE AMOUNT =	$ 740.00	
Surcharge of **$130.00** for furnishing the oath or declaration later than ☐ 20 ☐ 30 months from the earliest claimed priority date (37 CFR 1.492(e)).	$	

CLAIMS	NUMBER FILED	NUMBER EXTRA	RATE		
Total claims	15 - 20 =	0	x **$18.00**	$	
Independent claims	7 - 3 =	4	x **$84.00**	$ 336.00	
MULTIPLE DEPENDENT CLAIM(S) (if applicable)			+ **$270.00**	$	
TOTAL OF ABOVE CALCULATIONS =				$1,076.00	
☒ Applicant claims small entity status. See 37 CFR 1.27. The fees indicated above are reduced by 1/2. +				$ 538.00	
SUBTOTAL =				$ 538.00	
Processing fee of **$130.00** for furnishing the English translation later than ☐ 20 ☐ 30 months from the earliest claimed priority date (37 CFR 1.492(f)).				$	
TOTAL NATIONAL FEE =				$ 538.00	
Fee for recording the enclosed assignment (37 CFR 1.21(h)). The assignment must be accompanied by an appropriate cover sheet (37 CFR 3.28, 3.31). **$40.00** per property +				$	
TOTAL FEES ENCLOSED =				$	
				Amount to be refunded:	$
				charged:	$

a. ☐ A check in the amount of $ _____ to cover the above fees is enclosed.

b. ☐ Please charge my Deposit Account No. _____ in the amount of $ _____ to cover the above fees. A duplicate copy of this sheet is enclosed.

c. ☐ The Commissioner is hereby authorized to charge any additional fees which may be required, or credit any overpayment to Deposit Account No. _____. A duplicate copy of this sheet is enclosed.

d. ☐ Fees are to be charged to a credit card. **WARNING:** Information on this form may become public. **Credit card information should not be included on this form.** Provide credit card information and authorization on PTO-2038.

NOTE: Where an appropriate time limit under 37 CFR 1.494 or 1.495 has not been met, a petition to revive (37 CFR 1.137 (a) or (b)) must be filed and granted to restore the application to pending status.

SEND ALL CORRESPONDENCE TO:

WILLIAM G. LANE, INC., P.C.
16485 Laguna Canyon Road, #250
Irvine, CA 92618

SIGNATURE

William G. Lane
NAME

24,761
REGISTRATION NUMBER

FORM PTO-1390 (REV 11-2000) page 2 of 2

JC05 Rec'd PCT/PTC 30 OCT 2001

NO. (if known, see 37 CFR 1.5) 10/018164	INTERNATIONAL APPLICATION NO.	ATTORNEY'S DOCKET NUMBER

The following fees are submitted:

BASIC NATIONAL FEE (37 CFR 1.492 (a) (1) - (5)):

		CALCULATIONS PTO USE ONLY	
Neither international preliminary examination fee (37 CFR 1.482) nor international search fee (37 CFR 1.445(a)(2)) paid to USPTO and International Search Report not prepared by the EPO or JPO	$1000.00		
International preliminary examination fee (37 CFR 1.482) not paid to USPTO but International Search Report prepared by the EPO or JPO	$860.00		
International preliminary examination fee (37 CFR 1.482) not paid to USPTO but international search fee (37 CFR 1.445(a)(2)) paid to USPTO	$710.00		
International preliminary examination fee (37 CFR 1.482) paid to USPTO but all claims did not satisfy provisions of PCT Article 33(1)-(4)	$690.00		
International preliminary examination fee (37 CFR 1.482) paid to USPTO and all claims satisfied provisions of PCT Article 33(1)-(4)	$100.00		
ENTER APPROPRIATE BASIC FEE AMOUNT =		$ 740.00	
Surcharge of $130.00 for furnishing the oath or declaration later than ☐ 20 ☐ 30 months from the earliest claimed priority date (37 CFR 1.492(e)).		$	

CLAIMS	NUMBER FILED	NUMBER EXTRA	RATE		
				$	
Total claims	15 - 20 =	0	x $18.00	$	
Independent claims	7 - 3 =	4	x $84.00	$ 336.00	
MULTIPLE DEPENDENT CLAIM(S) (if applicable)			+ $270.00	$	
TOTAL OF ABOVE CALCULATIONS =				$1,076.00	
☒ Applicant claims small entity status. See 37 CFR 1.27. The fees indicated above are reduced by 1/2. +				$ 538.00	
SUBTOTAL =				$ 538.00	
Processing fee of $130.00 for furnishing the English translation later than ☐ 20 ☐ 30 months from the earliest claimed priority date (37 CFR 1.492(f)).				$	
TOTAL NATIONAL FEE =				$ 538.00	
Fee for recording the enclosed assignment (37 CFR 1.21(h)). The assignment must be accompanied by an appropriate cover sheet (37 CFR 3.28, 3.31). $40.00 per property +				$	
TOTAL FEES ENCLOSED =				$	
				Amount to be refunded:	$
				charged:	$

a. ☐ A check in the amount of $ _____ to cover the above fees is enclosed.

b. ☐ Please charge my Deposit Account No. _____ in the amount of $ _____ to cover the above fees. A duplicate copy of this sheet is enclosed.

c. ☐ The Commissioner is hereby authorized to charge any additional fees which may be required, or credit any overpayment to Deposit Account No. _____. A duplicate copy of this sheet is enclosed.

d. ☐ Fees are to be charged to a credit card. **WARNING:** Information on this form may become public. **Credit card information should not be included on this form.** Provide credit card information and authorization on PTO-2038.

NOTE: Where an appropriate time limit under 37 CFR 1.494 or 1.495 has not been met, a petition to revive (37 CFR 1.137 (a) or (b)) must be filed and granted to restore the application to pending status.

SEND ALL CORRESPONDENCE TO:

WILLIAM G. LANE, INC., P.C.
16485 Laguna Canyon Road, #250
Irvine, CA 92618

SIGNATURE

William G. Lane
NAME

24,761
REGISTRATION NUMBER