Filed: June 29, 2023

On behalf of **Edwards Lifesciences Corporation and Edwards Lifesciences LLC**
By: Craig S. Summers
Joshua J. Stowell
Brian C. Barnes
KNOBBE, MARTENS, OLSON & BEAR, LLP
2040 Main Street, 14th Floor
Irvine, CA 92614
Tel.: (949) 760-0404
Fax: (949) 760-9502
Email: BoxEdwards28-1@knobbe.com

UNITED STATES PATENT AND TRADEMARK OFFICE

BEFORE THE PATENT TRIAL AND APPEAL BOARD

EDWARDS LIFESCIENCES CORPORATION AND EDWARDS LIFESCIENCES LLC
Petitioners,

v.

AORTIC INNOVATIONS, LLC
Patent Owner.

IPR2023-01151
Patent No. 11,337,834

PETITION FOR *INTER PARTES* REVIEW OF U.S. PATENT NO. 11,337,834

TABLE OF CONTENTS

Page No.

I. SUMMARY OF THE ARGUMENT 1

II. PRIOR IPRS OF RELATED PATENTS 6

III. STATE OF THE ART 8

IV. The ’834 PATENT 16

A. Overview 16

B. Prosecution History 17

C. The Critical Date 19

V. STATEMENT AND RELIEF REQUESTED 19

A. IPR Grounds 19

B. The Asserted References Are Prior Art 20

C. The Asserted References Are Analogous Art 20

VI. LEVEL OF ORDINARY SKILL 21

VII. CLAIM CONSTRUCTION 21

VIII. PROPOSED GROUNDS FOR UNPATENTABILITY 22

A. Grounds 1-2: Claims 1-6, 8-18 Obvious Over Spenser *or* Levi and Spenser II 22

1. Claim 1 24

a. Preamble 24

b. Frame 24

c. Radially Expandable 26

TABLE OF CONTENTS
(*cont'd*)

Page No.

d. Leaflet Assembly 26

e. Polymer Covering 28

f. First Plurality of Fibers 30

i. Spenser and Spenser II 31

ii. Levi and Spenser II 33

g. Endovascularly Deployed 35

i. Spenser and Spenser II 35

ii. Levi and Spenser II 39

h. First Plurality of Fibers Pressed Against Native Leaflets 41

i. Spenser and Spenser II 42

ii. Levi and Spenser II 44

i. Second Plurality of Fibers 44

2. Claim 2 48

3. Claim 3 51

a. Spenser 51

b. Levi 54

4. Claim 4 55

5. Claim 5 56

6. Claim 6 58

TABLE OF CONTENTS
(*cont'd*)

Page No.

7. Claim 8 59

8. Claim 9 60

9. Claim 10 61

10. Claim 11 63

a. Spenser 63

b. Levi 65

11. Claim 12 65

12. Claim 13 66

13. Claim 14 67

14. Claim 15 70

15. Claim 16 70

16. Claim 17 72

a. Polymer Covering 72

b. Spacing 73

c. Seal About Spacing 75

17. Claim 18 75

B. Grounds 3-4: Claims 1-6, 8-18 Obvious Over Spenser or Levi in Combination with Chuter 76

1. Claim 1 79

a. Preamble 79

TABLE OF CONTENTS
(*cont'd*)

Page No.

b. Frame 79

c. Radially Expandable 79

d. Leaflet Assembly 79

e. Polymer Covering 80

f. First Plurality of Fibers 80

i. Spenser and Chuter 80

ii. Levi and Chuter 82

g. Endovascularly Deployed 83

h. First Plurality Pressed Against Native Leaflets 84

i. Second Plurality of Fibers 84

2. Claim 2 87

3. Claim 3 89

4. Claim 4 89

5. Claim 5 90

6. Claim 6 91

7. Claim 8 91

8. Claim 9 91

9. Claim 10 92

10. Claim 11 92

11. Claim 12 92

TABLE OF CONTENTS
(*cont'd*)

Page No.

12. Claim 13 93

13. Claim 14 94

14. Claim 15 94

15. Claim 16 94

16. Claim 17 95

a. Polymer Covering 95

b. Spacing 95

c. Seal About Spacing 96

17. Claim 18 97

C. Grounds 4-6: Claims 1-6, 8-18 Obvious Over Spenser or Levi in Combination with Chuter and Spenser II 97

IX. SECONDARY CONSIDERATIONS 98

X. THE BOARD SHOULD NOT DENY INSTITUTION UNDER 35 U.S.C. §325(d) 98

XI. MANDATORY NOTICES UNDER 37 C.F.R. §42.8(a)(1) 100

A. Real Party-In-Interest (37 C.F.R. §42.8(b)(1)) 100

B. Related Matters (37 C.F.R. §42.8(b)(2)) 100

C. Lead and Backup Counsel (37 C.F.R. §42.8(b)(3)) 102

D. Service Information Under 37 C.F.R. §42.8(b)(4) 102

XII. FEES 102

TABLE OF CONTENTS
(*cont'd*)

Page No.

XIII. GROUNDS FOR STANDING UNDER 37 C.F.R. §42.104 103

XIV. CONCLUSION..... 103

Aortic Innovations, LLC, Exhibit 2136
Page 2136 - 7
IPR2023-01325, Edwards Lifesciences Corp. et al v. Aortic Innovations, LLC

TABLE OF AUTHORITIES

Page No(s).

10X Genomics, Inc. v. Bio-Rad Labs., Inc.,
IPR2020-00087, Paper 9 (P.T.A.B. Apr. 27, 2020) 22

E.I. du Pont de Nemours v. Phillips Petroleum,
849 F.2d 1430 (Fed. Cir. 1988) 54

Google LLC v. Hammond Dev. Int'l, Inc.,
54 F. 4th 1377 (Fed. Cir. 2022) 7

KSR Int'l Co. v. Teleflex. Inc.,
550 U.S. 398 (2007).....34, 36, 86

In re Nilssen,
851 F.2d 1401 (Fed. Cir. 1988) 21

Nintendo Co. v. Gamevice, Inc.,
IPR2018-01521, Paper 7 (P.T.A.B. Mar. 11, 2019).....22

Phillips v. AWH Corp.,
415 F.3d 1303 (Fed. Cir. 2005) 22

Smith & Nephew, Inc. v. Rea,
721 F.3d 1371 (Fed. Cir. 2013) 54

TorPharm, Inc. v. Ranbaxy Pharms.,
336 F.3d 1322 (Fed. Cir. 2003) 54

Unwired Planet, LLC v. Google Inc.,
841 F.3d 995 (Fed. Cir. 2016) 21

Aortic Innovations, LLC, Exhibit 2136
Page 2136 - 8
IPR2023-01325, Edwards Lifesciences Corp. et al v. Aortic Innovations, LLC

TABLE OF AUTHORITIES
(*cont'd*)

Page No(s).

OTHER AUTHORITIES

35 U.S.C. §112 2

35 U.S.C. §325 ..... 103, 104, 105

37 C.F.R. §42.100 22

Aortic Innovations, LLC, Exhibit 2136
Page 2136 - 9
IPR2023-01325, Edwards Lifesciences Corp. et al v. Aortic Innovations, LLC

TABLE OF EXHIBITS

Exhibit No.	Description
1001	U.S. Patent No. 11,337,834 B2 ("**'834 patent**")
1002	Excerpts from the prosecution history of the '834 patent
1003	Declaration of Nigel P. Buller, M.D.
1004	Curriculum Vitae of Nigel P. Buller, M.D.
1005	U.S. Provisional Application No. 61/567,458
1006	U.S. Provisional Application No. 61/723,446
1007	Walther, Thomas, et al., *Trans-catheter valve-in-valve implantation: in vitro hydrodynamic performance of SAPIEN + cloth trans-catheter heart valve in the Carpentier-Edwards Perimount valves*, 40 Euro. J. of Cardio-thoracic Surgery 1120-1126 (April 2011) ("Walther")
1008	U.S. Patent No. 9,393,110 B2 to Levi et al. ("**Levi**")
1009	Reserved
1010	U.S. Patent No. 7,510,575 B2 to Spenser et al. ("**Spenser**")
1011	WO 2006/005015 A2 to Spenser et al. ("**Spenser II**")
1012	Reserved
1013	U.S. Patent No. 3,365,728 to Edwards et al.
1014	U.S. Patent No. 5,411,552 to Andersen et al.
1015	U.S. Patent Pub. No. 2003/0153974 A1 to Spenser et al.
1016	Reserved

Exhibit No.	Description
1017	Cheung, Anson, et al., *Transapical Transcatheter Mitral Valve-in-Valve Implantation in a Human,* Annals of Thoracic Surgery, 87:e 18-20 (2009).
1018	PCT Publication No. WO 98/29057 to Letac et al.
1019	U.S. Patent No. 6,893,460 B2 to Spenser et al.
1020-1021	Reserved
1022	Smith, Craig R., et al., *Transcatheter versus Surgical Aortic-Valve Replacement in High-Risk Patients,* 364 N. Engl. J. Med. 23, 2187-2198 (June 9, 2011)
1023	Webb, John G. and Binder, Ronald K., *Transcatheter aortic valve implantation: The evolution of prostheses, delivery systems and approaches,* Archives of Cardiovascular Disease 105, 153-159 (March 16, 2012)
1024	Reserved
1025	Cribier, Alain, et al., *Percutaneous Transcatheter Implantation of an Aortic Valve Prosthesis for Calcific Aortic Stenosis,* 1006 Circulation 3006-3008 (December 10, 2002)
1026	U.S. Patent No. 7,393,360 B2 to Spenser et al.
1027-1029	Reserved
1030	Cribier, Alain, et al., *Early Experience with Percutaneous Transcatheter Implantation of Heart Valve Prosthesis for the Treatment of End-Stage Inoperable Patients with Calcific Aortic Stenosis,* 43 J. of the Am. College of Cardiology 4, 698-703 (February 18, 2004)

Exhibit No.	Description
1031-1033	Reserved
1034	Andersen, Henning, et al., *Transluminal implantation of artificial heart valves. Description of a new expandable aortic valve and initial results with implantation by catheter technique in closed chest pigs*, European Heart Journal, 13:704-08 (1992)
1035	Reserved
1036	Nietlispach, Fabian, et al., *Current Balloon-Expandable Transcatheter Heart Valve and Delivery Systems*, Catheterization and Cardiovascular Interventions, 75:295-300 (2010)
1037	U.S. Patent Application Publication No. US 2009/0281619 A1 to Le et al.
1038-1044	Reserved
1045	U.S. Patent No. 7,585,321 B2 to Cribier et al.
1046	Preliminary Amendment for Patent Application No. 17/096,253 Submitted November 30, 2020
1047	Piazza, Nicolo, et al., *Anatomy of the Aortic Valvar Complex and Its Implications for Transcatheter Implantation of the Aortic Valve*, Cir Cardiovascular Intervention 1:74-81 (2008).
1048	Reserved
1049	Excerpts from the prosecution history of U.S. Patent No. 10,792,172
1050	*Aortic Innovations LLC v. Edwards Lifesciences Corp.*, Case No. 1:21-cv-01377-RGA, Dkt. 1, Complaint (Sept. 28, 2021)

Exhibit No.	Description
1051	U.S. Patent No. 6,730,118 B2 to Spenser et al.
1052	PCT Publication No. WO 2006/124649 A3 to Nguyen et al.
1053	U.S. Patent Pub. No. 2002/0052649 A1 to Greenhalgh
1054	U.S. Patent Pub. No. 2011/0098802 to Braido et al.
1055-1056	Reserved
1057	U.S. Patent No. 7, 524,331 B2 to Birdsall ("Birdsall")
1058	Reserved
1059-1071	Reserved
1072	Deposition Transcript of Stephen Brecker from August 30, 2022
1073	Deposition Transcript of Stephen Brecker from August 31, 2022
1074	U.S. Patent No. 7,921,678 to Norris et al. ("Norris")
1075-1105	Reserved
1106	Estridge, Trudy & Dale Feldman, *Quantification of Vascular Ingrowth into Dacron® Velour*, 6 J. Biomaterials Applications 157-169 (1991) ("Estridge")
1107	Hall, William C. et al., *Velour Fabrics Applied to Medicine*, 1 J. Biomed. Mater. Res. 179-196 (1967) ("Hall")

Exhibit No.	Description
1108	Jonas, Richard A. et al., *Biological Sealants and Knitted Dacron: Porosity and Histological Comparisons of Vascular Graft Materials with and without Collagen and Fibrin Glue Pretreatments*, 41 Ann. Thorac. Surg. 657-663 (June 1986) ("Jonas")
1109	Ko, Frank K., *Fabrics*, Encyclopedia of Biomaterials and Biomedical Engineering 1043-1061 (2008) ("Ko")
1110	Pourdeyhimi, B. & Text, C., *A Review of Structural and Material Properties of Vascular Grafts*, 2 J. Biomaterail App. 163-204 (1987) ("Pourdeyhimi")
1111	Scott, Steward M. et al., *A Collogen Coated Vascular Prosthesis*, 28 J. Cardiovascular Surg. 498-504 (1987) ("Scott")
1112	Stegmann, Th et al., *Clinical Experience with a New Collagen-coated Dacron Double-velour Prosthesis*, 34 Thorac. Cardiovasc. Surgeon 54-56 (1986) ("Stegmann")
1113-1115	Reserved
1116	U.S. Patent Pub. No. 2002/0151958 to Chuter ("**Chuter**")
1117	*Edwards Lifesciences Corp. v. Aortic Innovations, LLC*, IPR2021-01527, Final Written Decision ("'172 FWD")
1118	*Edwards Lifesciences Corp. v. Aortic Innovations, LLC*, IPR2021-01584, Final Written Decision ("'011 FWD")
1119	*Edwards Lifesciences Corp. v. Aortic Innovations, LLC*, IPR2022-00193, Final Written Decision ("'538 FWD")
1120	*Edwards Lifesciences Corp. v. Aortic Innovations, LLC*, IPR2022-00034, Final Written Decision ("'846 FWD")

Exhibit No.	Description
1121	*Edwards Lifesciences Corp. v. Aortic Innovations, LLC*, IPR2022-00549, Institution Decision from ("'735 Institution Decision")
1122	*Aortic Innovations LLC v. Edwards Lifesciences Corp.*, Case No. 1-23-CV-00158 (JPM), Dkt. 13, Second Amended Complaint (Apr. 10, 2023)
1123	Aortic Innovations LLC's Disclosure of Asserted Claims and Infringement Contentions, C.A. No. 1-23--CV-00158 (JPM) ("PO Infringement Contentions")
1124	*Edwards Lifesciences Corp. v. Aortic Innovations, LLC*, IPR2021-01584 Patent Owner's Preliminary Response ("'011 POPR")
1125	U.S. Pat. App. No. 17/469,391, January 4, 2022 Amendment
1126	U.S. Pat. No. 4,739,762
1127	U.S. Pat. No. 5,102,417
1128	Deposition Transcript of Dr. Nigel Buller from November 11, 2012
1129	C. C. Chu, *Understanding Implantable Textiles*, Advanced Textiles Source (May 21, 2018) ("Chu")
1130	"Distinct," Merriam Webster Online Dictionary, *available at* https://www.merriam-webster.com/dictionary/distinct
1131-1138	Reserved
1139	*Aortic Innovations LLC v. Edwards Lifesciences Corp.*, Case No. 1:21-cv-01377-RGA, Dat. 83, Plaintiff Aortic Innovations' Opening Claim Construction Brief (Nov. 21, 2021)

Petitioners Edwards Lifesciences Corp. and Edwards Lifesciences LLC ("Petitioner") request *inter partes* review ("IPR") of claims 1-6 and 8-18 ("the challenged claims") of U.S. Patent No. 11,337,834 ("the '834 patent") to Aortic Innovations, LLC ("PO" or "Patent Owner").

I. SUMMARY OF THE ARGUMENT

The '834 patent is a continuation of several patents challenged by Petitioner in prior IPRs.[1] The unpatentability issues presented herein have largely been decided by the Board in those prior IPRs, at least some of which have preclusive effect. Many limitations of the challenged claims were at-issue in the prior IPRs, and the Board found that the same prior art asserted herein discloses or renders obvious those limitations. In response to Petitioner's prior IPRs, PO has continued to prosecute new patents, attempting to further stretch its claims to cover Petitioner's SAPIEN 3 Ultra valve. However, like the claims found unpatentable in Petitioner's prior IPRs, PO's efforts to ensnare Petitioner's SAPIEN 3 Ultra valve have resulted in overbroad claims that cover the prior art.

The '834 patent claims a heart valve having: a frame, polymer covering, leaflet assembly, and fibers that extend away from the frame.

[1] *See infra* §II (identifying prior IPRs).

Aortic Innovations, LLC, Exhibit 2136
Page 2136 - 16
IPR2023-01325, Edwards Lifesciences Corp. et al v. Aortic Innovations, LLC

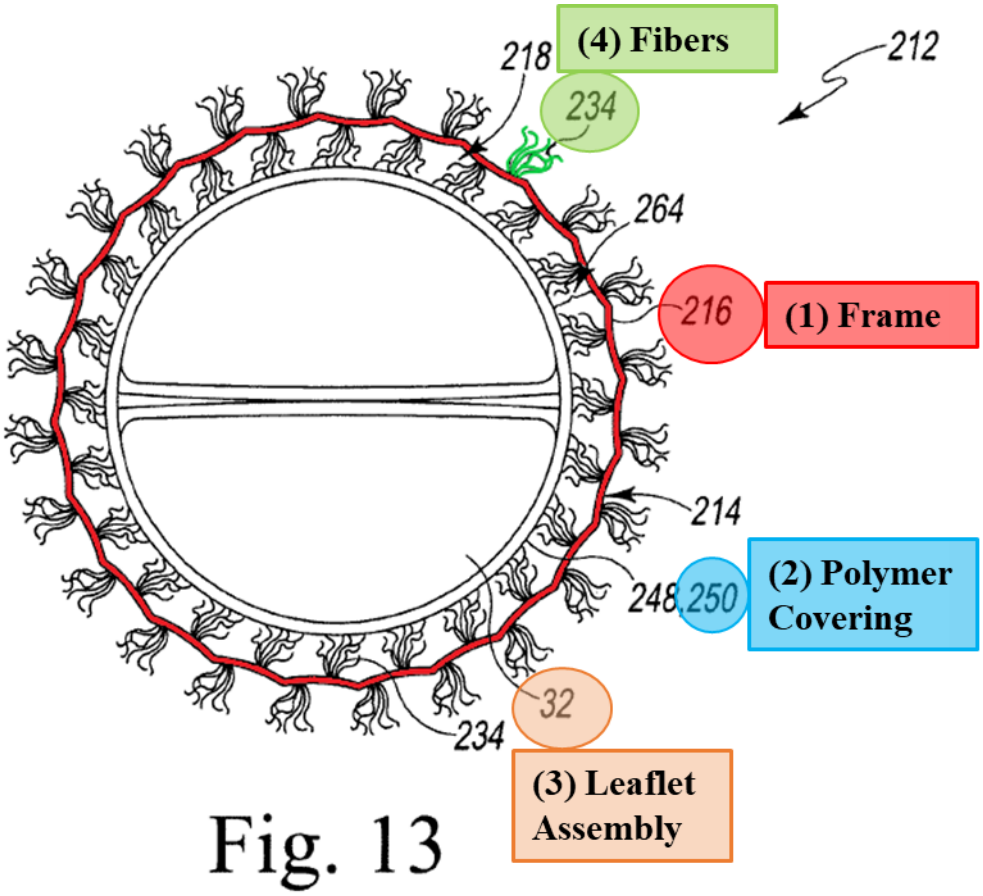

Fig. 13

In attempting to distinguish the ’834 patent from the claims previously found unpatentable, PO included limitations requiring (1) a “first plurality” and “second plurality” of fibers, (2) “spacings” extending between the fibers, and (3) a valve that is “endovascularly deployed through the femoral artery.” These litigation-driven limitations do not distinguish the challenged claims from the prior art.[2]

[2] Petitioner reserves its right to challenge whether ’834 patent claims satisfy 35 U.S.C. §112 in future proceedings.

For example, **Chuter** discloses a first and second plurality of fibers that extend away from the frame:

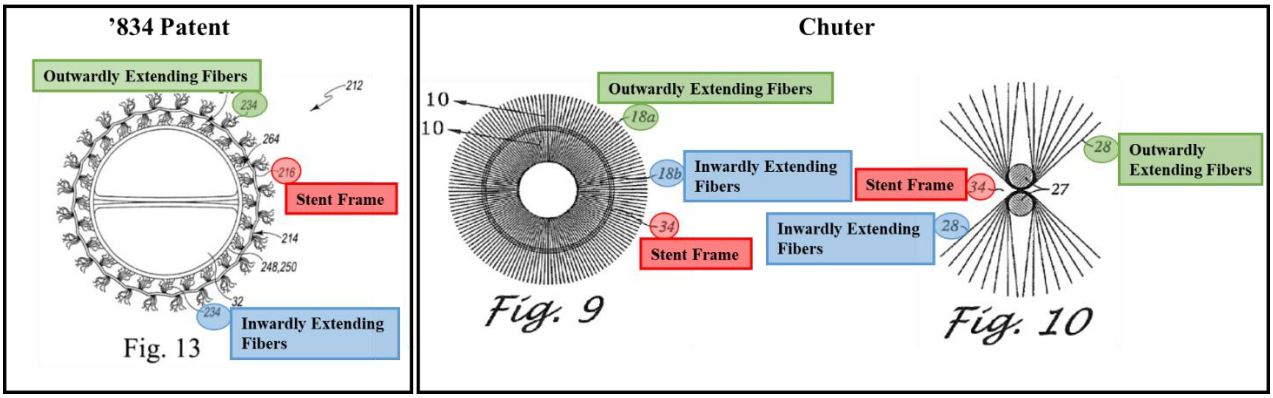

(*Compare* Ex. 1001, Fig. 13 *with* Ex. 1116, Figs. 9-10.) Chuter also discloses implanting the device through "one of the arteries in the legs" (e.g., femoral artery). (Ex. 1116, [0062].)

Moreover, during prosecution of the '834 patent, PO argued that the outer skirt of Petitioner's SAPIEN 3 Ultra valve meets the "second plurality of fibers" limitation because it includes "a first array of fibers forming a mesh, and a second array of fibers that end therefrom and into engagement with native leaflets of the patient."[3] (Ex. 1002, 1152.) PO made similar allegations in litigation. (*See* Ex.

[3] Petitioner preserves the argument that the SAPIEN 3 Ultra valve does not meet the limitations of the '834 patent, including a "second plurality of fibers," and that PO's

1123, 75-78.) Petitioner disagrees with PO's allegations regarding the SAPIEN 3 Ultra valve; however, based on PO's contentions, the '834 patent claims encompass the prior art.

For example, **Spenser II**, which the Board relied upon for its unpatentability findings in the prior IPRs, discloses a heart valve having a "compressible material" that "may resemble a cloth or fabric having small fibers extending from the surface of the material."

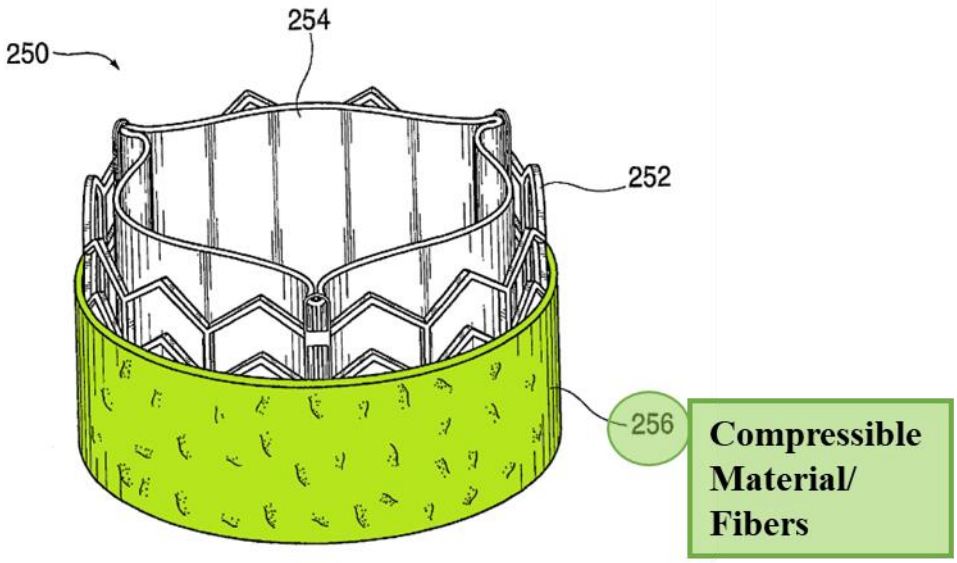

FIG. 22

arguments concerning the Pintor reference establish prosecution history estoppel for the SAPIEN 3 Ultra valve. (*See* Ex. 1002, 1150-1152.)

In the prior IPRs, PO argued that the referenced "surface of the material" is a separate "base layer" (i.e., mesh) of fibers with a separate plurality of fibers extending outwardly therefrom.

Likewise, Norris, which the Board also cited in the prior IPRs, discloses "a compressible resilient fabric" for a heart valve or stent that "can include a ground layer 20 of knitted yarn, and a loop layer 30 comprising a plurality of loops 32 of yarn 31, each loop 32 having a point 33 knit into the ground layer 20."

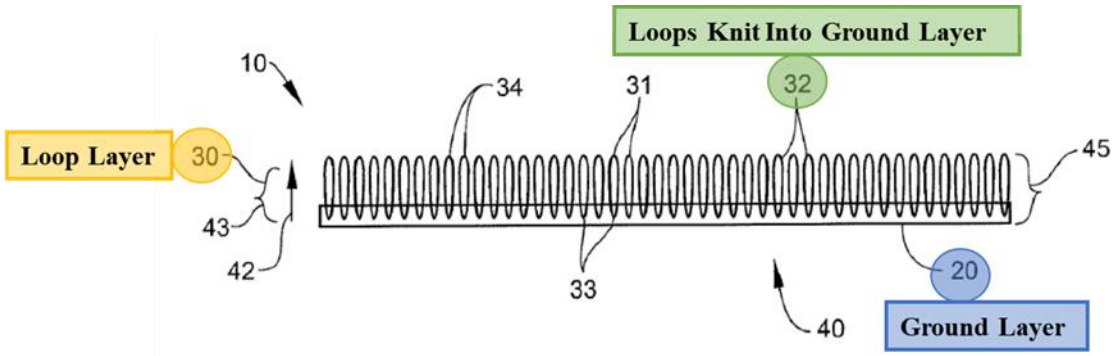

Fig. 1

Both Spenser II and Norris disclose a "second portion of fibers" under PO's application of that term in prosecution and litigation.

The Board previously concluded that the prior art asserted herein discloses or renders obvious nearly every limitation of the challenged claims. Because the new limitations were also known in the art, the Board should find every challenged claim unpatentable.

II. PRIOR IPRS OF RELATED PATENTS

Petitioner has previously filed six IPRs ("prior IPRs") challenging patents having the same specification and drawings as the '834 patent. The status of those IPRs is summarized below:

IPR No.	Challenged Patent	Outcome/Status
IPR2021-01527	10,792,172	All challenged claims obvious over Spenser + Spenser II
IPR2021-01584	10,857,011	All challenged claims obvious over Spenser + Spenser II
IPR2022-00193	10,881,538	Claims 1–8, 10–18, and 20 obvious over Spenser + Spenser II; Claims 9 and 19 not unpatentable due to "fibers extending radially inwardly from the outer frame" limitation
IPR2022-00034	10,966,846	Claim 6 not unpatentable due to "free of an outer graft covering" limitation
IPR2022-00556	10,987,236	IPR instituted, oral hearing held June 16, 2023
IPR2022-00549	11,129,735	Institution denied based on "apices of the outer frame…are uncovered" limitation

As shown, the Board found every challenged claim in Petitioner's prior IPRs unpatentable based on Spenser and Spenser II except claims that recite: (1) "fibers extending radially inwardly from the outer frame;" (2) the valve assembly is "free of an outer graft covering between the fibers and the outer frame;" or (3) "an end of the apices of the outer frame that are most proximal are uncovered by the outer seal and the graft covering" and "the end of the most proximal apices of the outer frame extends more proximally than a proximal end of the outer seal." (*See* Ex. 1119, 107;

Ex. 1120, 39-52; Ex. 1121, 17-19, 22-24, 29-31.) None of the presently challenged claims include these limitations.

The Board's unpatentability findings in IPR2021-01527 ('172 patent) and IPR2021-01584 ('011 patent) have preclusive effect on many of the issues presented herein because PO did not appeal the Board's decisions and PO's deadline for filing an appeal has passed. *See, e.g., Google LLC v. Hammond Dev. Int'l, Inc.*, 54 F. 4th 1377, 1381 (Fed. Cir. 2022) ("It is well established that collateral estoppel applies to IPR proceedings."). Notably, "collateral estoppel may apply even if the patent claims use slightly different language to describe substantially the same invention, so long as the differences between the unadjudicated patent claims and adjudicated patent claims do not materially alter the question of invalidity." *Id.* (internal quotation marks omitted). Accordingly, PO is precluded from challenging at least the following issues for the '834 patent:

- POSITAs would have been motivated to add Spenser II's compressible material to Spenser's transcatheter heart valves ("THVs") (Ex. 1117, 64-66; Ex. 1118, 67-70);
- POSITAs would have reasonably expected success in combining Spenser + Spenser II (Ex. 1117, 64-66; Ex. 1118, 67-70);

- POSITAs would have reasonably expected the THV resulting from Spenser + Spenser II would be endovascularly deliverable (Ex. 1117, 57-64; Ex. 1118, 57-68);
- Petitioner's expert, Dr. Nigel Buller, is qualified as an expert and a POSITA (Ex. 1117, 51-52, Ex. 1118, 55-57);
- Spenser II and Norris disclose sealing materials comprising a plurality of outwardly extending fibers that "terminate in an end thereof outwardly of the outer frame" (Ex. 1117, 20-26, 71; Ex. 1118, 65);
- Spenser discloses:
    - a polymeric graft covering extending around a prosthetic heart valve for providing sealing to the heart valve;
    - a metallic frame that forms a gridded configuration;
    - a polymeric graft covering stitched to the metallic frame;
    - a polymeric graft covering extending beyond and over the proximal end of the frame to cover the proximal end of the frame.

(Ex. 1117, 18-20, 71; Ex. 1118, 20-23, 74).

III. STATE OF THE ART

Shortly after THVs were conceived in the late 1980's, practitioners added outer seals to reduce paravalvular leak ("PVL"). For example, in 2001,

Percutaneous Valve Technologies ("PVT"), a company co-founded by Dr. Alain Cribier, filed a patent application disclosing a THV having an outer seal, or "cuff portion," (*see* yellow below) surrounding the THV to prevent PVL:

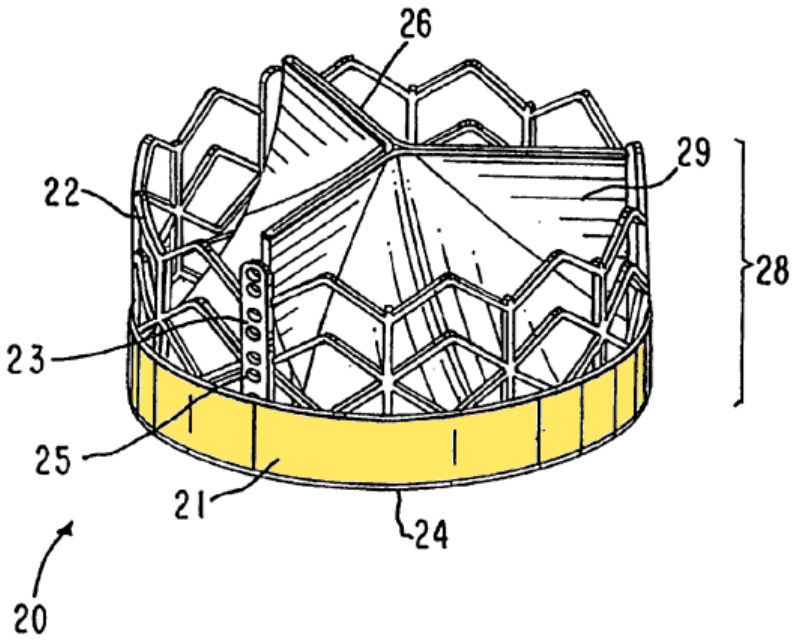

(Ex. 1019, 8:47-50, 9:19-22, Fig. 1; Ex. 1003, ¶65.) **Spenser**, relied on herein, is a continuation-in-part of this application and includes the above embodiment. (Ex. 1010, 13:22-25, Fig. 1.)

In 2004, Petitioner acquired PVT and developed the Cribier-Edwards THV, which included a (1) frame, (2) polymeric graft covering, and (3) leaflet assembly:

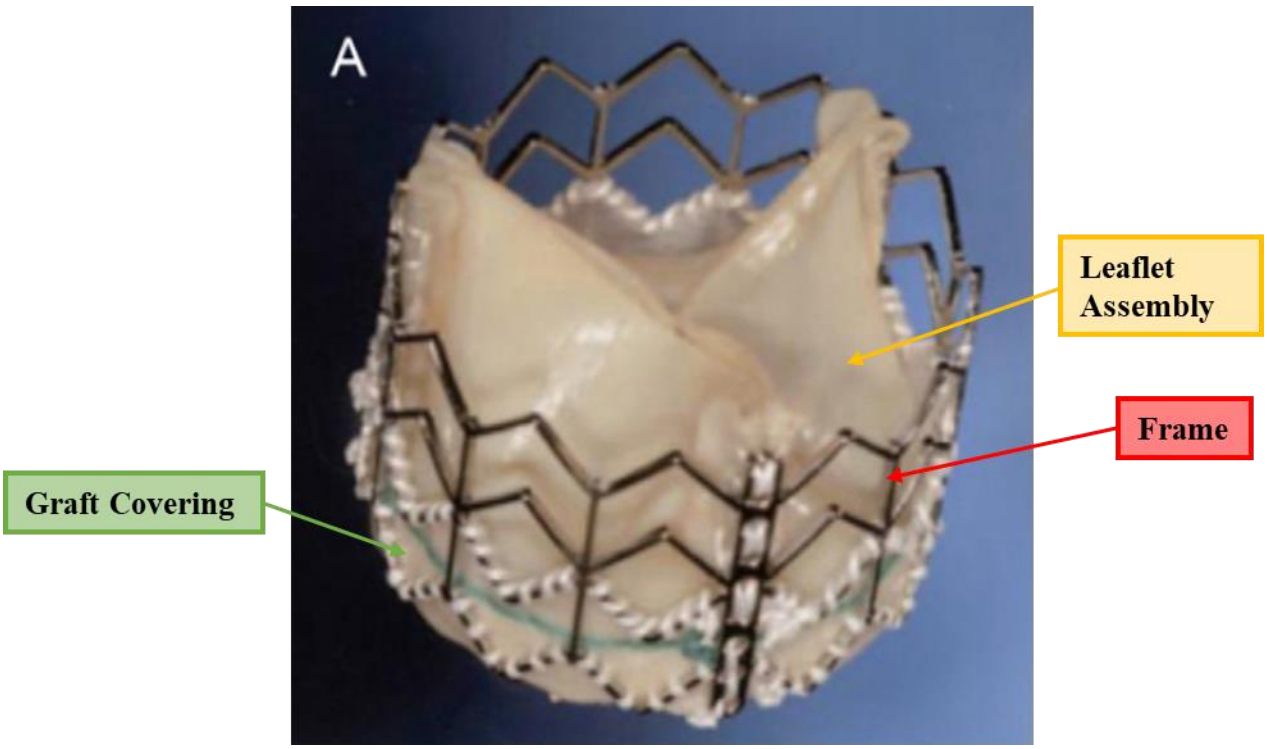

(Ex. 1023, 154, Fig. 3A (excerpt); Ex. 1003, ¶68.)

Also in 2004, Petitioner filed **Spenser II**, which discloses a THV having "a layer of compressible material 256 … disposed along an outer surface of the stent structure 252" to prevent PVL:

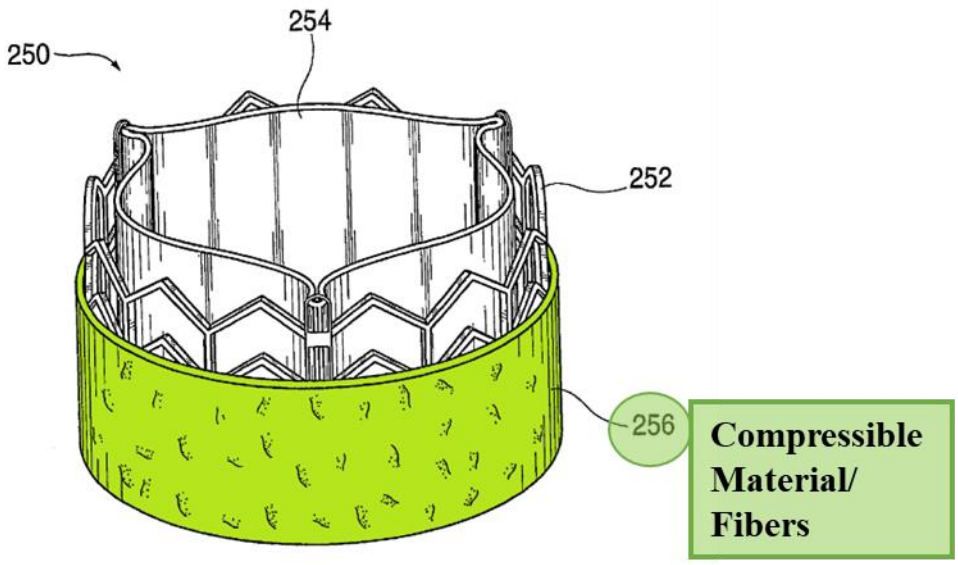

FIG. 22

(Ex. 1011, [00145], Fig. 22; Ex. 1003, ¶69.)

In 2009 and 2011, Petitioner developed embodiments of one of Spenser II's sealing concepts by adding compressible cloths to the outside of Petitioner's Cribier-Edwards and SAPIEN valves:

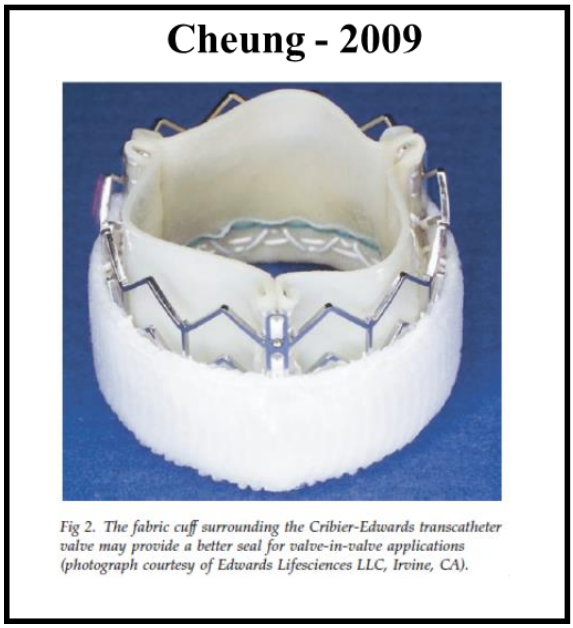

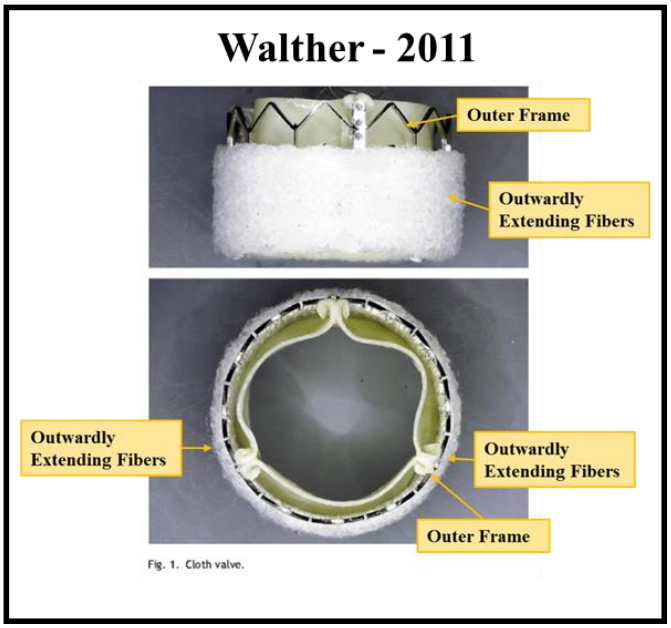

(Ex. 1017, 2, Fig. 2 (left); Ex. 1007, Fig. 1 (right).) Petitioner added these compressible cloths to provide better sealing, promote tissue ingrowth, and prevent PVL. (*See* Ex. 1017, 2; Ex. 1007, 1120-21.)

Many other types of compressible materials with outwardly extending fibers were known in the prior art, consistent with Spenser II's teachings. For example, practitioners used porous velour and velour-like fabrics as outer sealing materials in cardiovascular implants for decades prior to the November 2012 critical date of the '834 patent. (*See* Ex. 1107; Ex. 1106, 158; Ex 1110, 172; Ex. 1003, ¶160-165.) They adopted velour-like fabrics for their ability to promote tissue ingrowth, which led to better healing and sealing of the device with the patient's tissue. (*See, e.g.*, Ex. 1107, 180-181; Ex. 1106, 158; Ex. 1110, 172; Ex. 1003, ¶160-165.)

Norris, a patent issued in 2011, discloses "a compressible resilient fabric" for a heart valve or stent that "can include a ground layer 20 of knitted yarn, and a loop layer 30 comprising a plurality of loops 32 of yarn 31, each loop 32 having a point 33 knit into the ground layer 20."

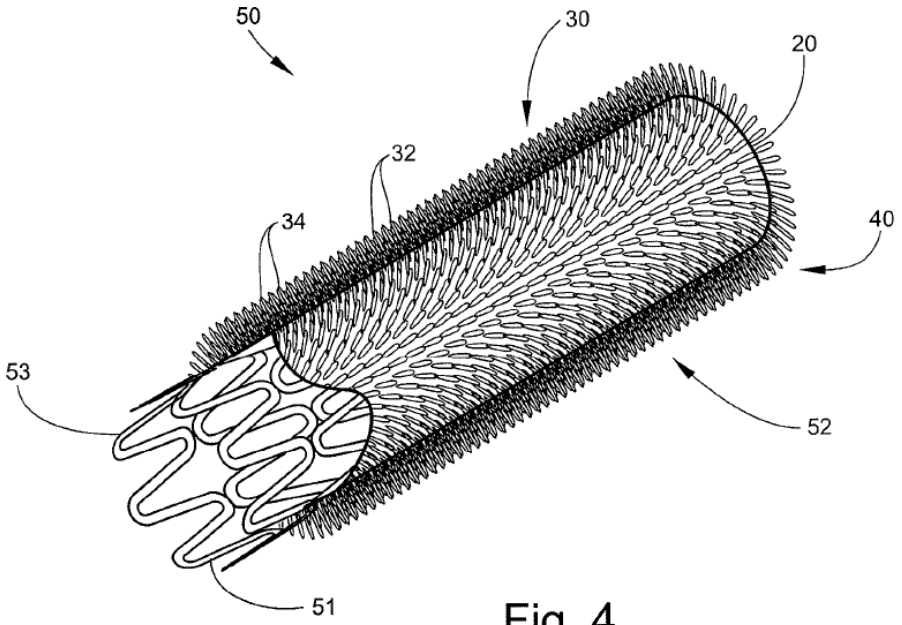

Fig. 4

(Ex. 1074, 4:22-26, 9:18-21, Fig. 4.) Norris's fabric helps prevent blood from leaking around the implanted device. (*Id.*, 9:18-26.) Norris's fabric is also highly compressible to enable endovascular delivery. (*Id.*, 8:23-39, 10:6-13.)

Chuter, a 2002 patent publication, provides another example of compressible materials for sealing cardiovascular implants. Chuter discloses embodiments of

endovascularly-delivered intervascular stents having a "fiber pile" made of individual fibers that are "adapted to form a foundation for tissue growth between the fiber pile and the lumenal wall of a vascular vessel." (Ex. 1116, [0017]-[0022], Figs 1-10.) The individual fibers of the "fiber pile" can extend from a "fabric pile backing" layer 16 (Fig. 2) or directly from the frame (Figs. 7, 9-10).

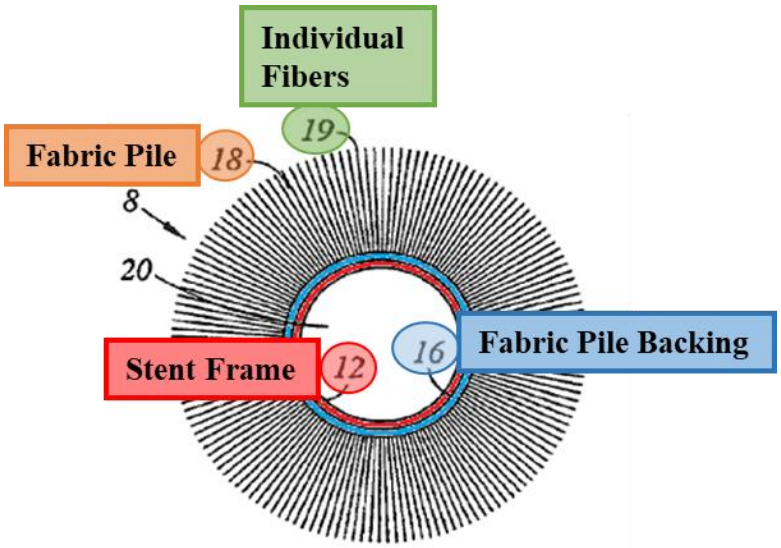

Fig. 2

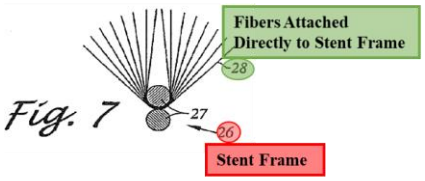

Fig. 7

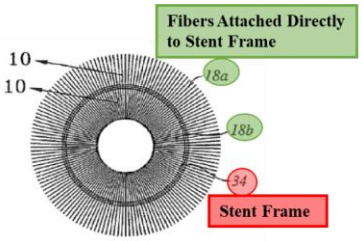

Fig. 9

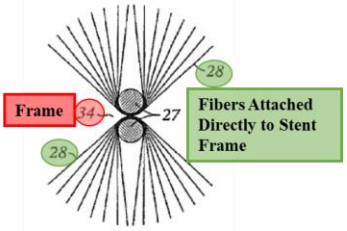

Fig. 10

(*Id.*, [0054]-[0057], Figs. 1-10.) Chuter also discloses embodiments having individual fibers that extend outwardly and inwardly from the frame (Figs. 9-10). (*Id.*, [0057], Figs. 8-10.)

Levi, a patent filed by Petitioner in 2010, describes an outer fabric skirt secured to a THV frame, which forms "a good fluid-tight seal between the valve and the native annulus":

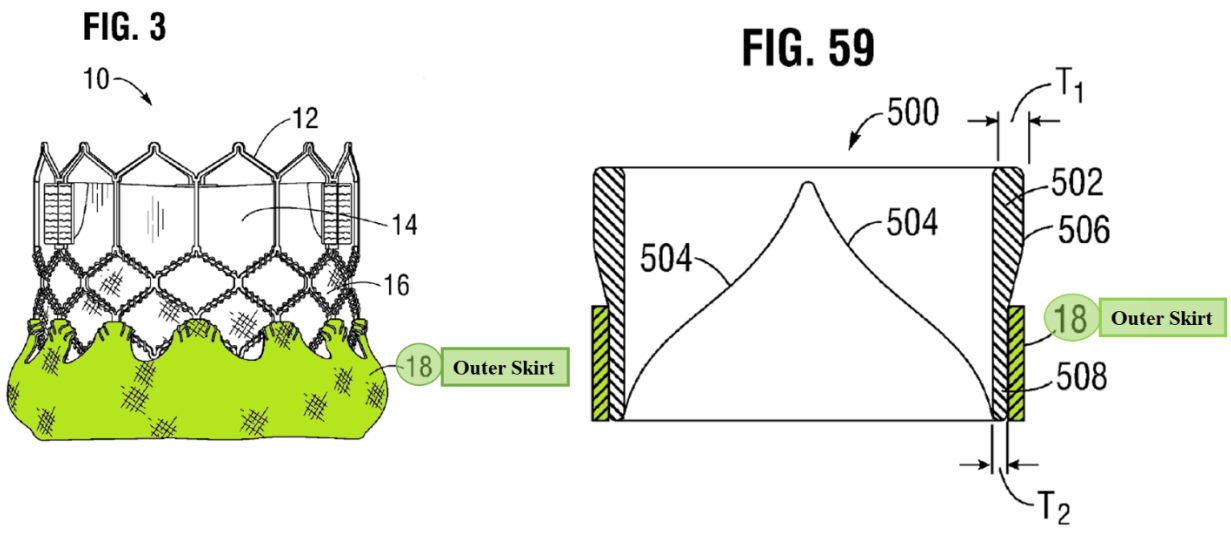

(Ex. 1008, 13:49-14:14, 17:12-18, Figs. 3, 59.) Levi also discloses several ways to minimize the impact of any outer seal on the crimped profile so the valve can be delivered transfemorally. (*See id.*, 6:46-49, 7:10-12, 14:60-64, 16:24-17:18.)

The above references demonstrate that the challenged claims merely combine known heart-valve features according to known techniques to yield predictable

results. The claims do not describe any new features or combine the known features in a nonobvious way. Therefore, the challenged claims are unpatentable.

IV. THE '834 PATENT

A. Overview

The '834 patent describes a valve assembly having a "dual-frame" for replacing a heart valve. (Ex. 1001, 11:61-12:21.) The "dual-frame" includes a "self-expanding outer frame 216" and "balloon-expandable inner frame 218 that is secured to the self-expanding outer frame 216 and houses the valve 32":

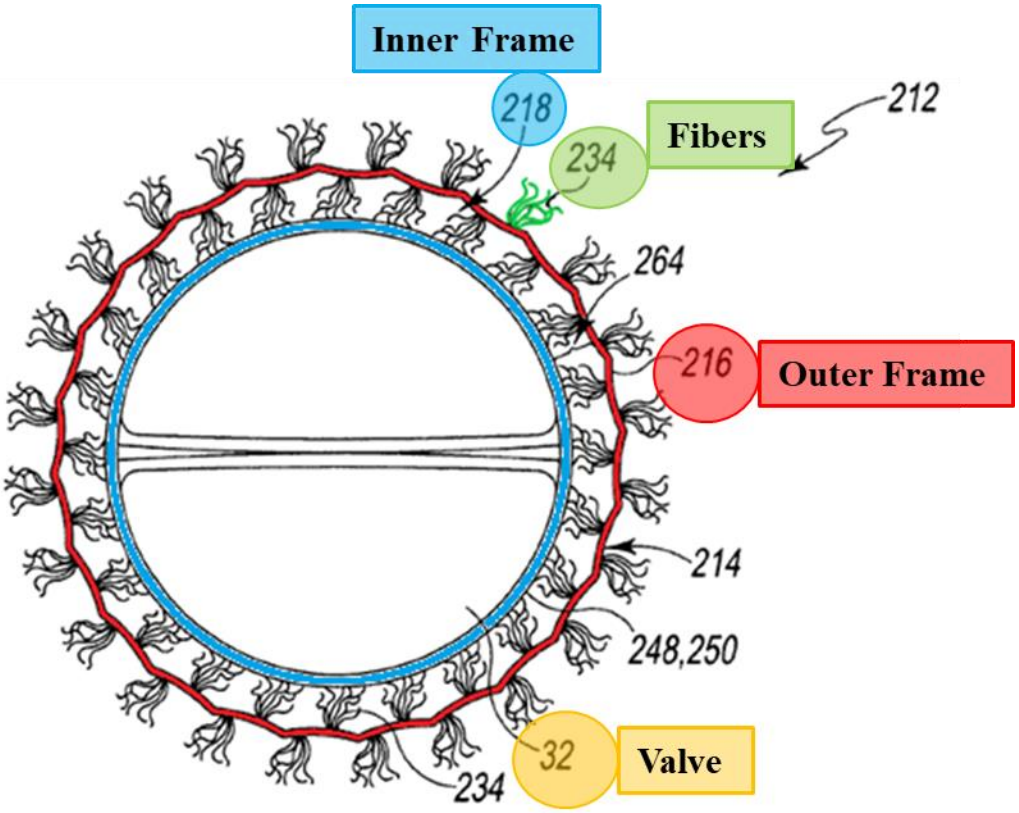

Fig. 13

(*Id.*, 12:9-12, Fig. 13.)

The outer frame includes an "open-cell stent configuration" and radially extending collagen fibers to aid in preventing PVL. (*Id.*, 12:12-18, 12:43-46, 13:17-20, Fig. 9.) The inner frame is a "balloon-expandable tubular stent." (*Id.*, 13:41-51.)

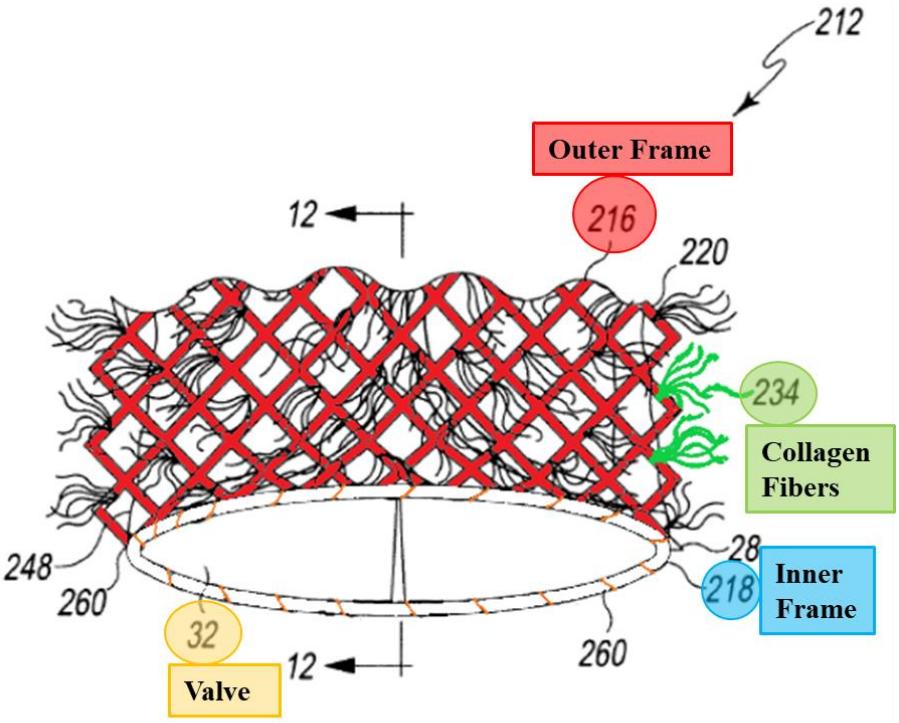

Fig. 11

B. Prosecution History

The Examiner issued Non-Final and Final Rejections, neither of which included prior-art-based rejections. (Ex. 1002, 1030-1035, 1155-1161.) The Examiner initially rejected the claims as indefinite and lacking written description

based, *inter alia*, on pending claim 13, which recited "the second plurality of fibers defining an opening extending through a thickness that is created by spacing formed between adjacent fibers." (*Id.*, 1157-1161.) In response, PO argued that "the advantage of this limitation is that the opening reduces restrictions on expansion and contraction of the stent frame (as opposed to a solid, outer graft), and encourages thrombos of the fibers by allowing blood flow therethrough":

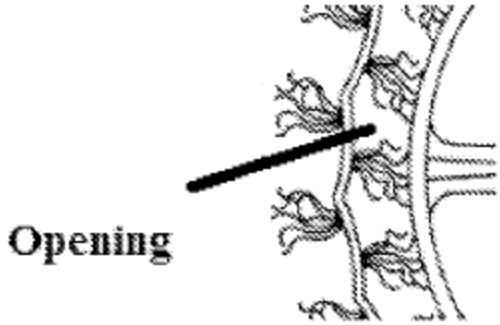

(*Id.*, 1133.)

The Examiner again rejected the claims as indefinite and lacking written description due to the "spacing" limitation. (*Id.*, 1032-1035.) In response, PO characterized Spenser II as "a very tightly knitted outer seal made of tightly knitted fibers" and argued "the lack of 'spacings' between some fibers would not allow for compression of the outwardly extending fibers." (*Id.*, 1001.) As explained below, PO's arguments are contradicted by Spenser II's disclosure that its sealing material is "compressible." (*Infra* §X.)

C. The Critical Date

The ’834 patent claims priority to two provisional applications: application No. 61/567,458 (“the ’458 provisional”), filed December 6, 2011; and application No. 61/723,446 (“the ’446 provisional”), filed November 7, 2012. (Ex. 1001.) During prosecution of the ’172 patent, which is a parent to the ’834 patent, PO stated that the ’172 patent’s “effective filing date . . . is believed to be based on Provisional Patent Application No. 61/723,446, filed on November 7, 2012.” (Ex. 1049, 274.) Additionally, in litigation, PO conceded that it did not file any patent applications describing outwardly extending fibers until 2012. (Ex. 1050, 9; Ex. 1122, 10.)

V. STATEMENT AND RELIEF REQUESTED

A. IPR Grounds

Petitioner asserts the following grounds of unpatentability:

Ground	Claims Challenged	Pre-AIA 35 U.S.C. §	References
1	1-6, 8-18	103	Spenser + Spenser II
2	1-6, 8-18	103	Levi + Spenser II
3	1-6, 8-18	103	Spenser + Chuter
4	1-6, 8-18	103	Levi + Chuter
5	1-6, 8-18	103	Spenser + Chuter + Spenser II
6	1-6, 8-18	103	Levi + Chuter + Spenser II

B. The Asserted References Are Prior Art

The Critical Date of the ’834 patent is November 7, 2012. (*Supra* §III.C.) The following references are prior art under pre-AIA §102(b):

(1) Spenser (Ex. 1010) issued on March 31, 2009;

(2) Spenser II (Ex. 1011) published on January 12, 2006;

(3) Chuter (Ex. 1116) published on October 17, 2002.

Levi (Ex. 1008) was filed on October 5, 2011, and published on May 17, 2012, and is prior art under pre-AIA §102(e).

C. The Asserted References Are Analogous Art

The asserted references are analogous art that is usable in an obviousness combination. *Unwired Planet, LLC v. Google Inc.*, 841 F.3d 995, 1000 (Fed. Cir. 2016). The references are from the same field as the ’834 patent, e.g., cardiovascular implant devices, including endografts and transcatheter heart valves. (Ex. 1003, ¶40.) The references are also pertinent to the problem the inventor was focused on, e.g., treating cardiovascular disease through minimally invasive procedures and providing effective sealing on devices used in such procedures. (*Id.*) Accordingly, a POSITA is presumed to have been aware of these references. *In re Nilssen*, 851 F.2d 1401, 1403 (Fed. Cir. 1988).

VI. LEVEL OF ORDINARY SKILL

A POSITA in November 2012 would have been an interventional cardiologist with a working knowledge of heart valve designs and endovascular prostheses. This POSITA would, where necessary, work with a medical device engineer to experiment with or manufacture a prosthetic heart valve. (Ex. 1003, ¶49.)

VII. CLAIM CONSTRUCTION

The claim terms should receive their ordinary and customary meaning as understood by a POSITA at the time of filing and in accordance with the specification and the prosecution history. 37 C.F.R. §42.100(b); *see Phillips v. AWH Corp.*, 415 F.3d 1303 (Fed. Cir. 2005). No terms of the '834 patent require construction to resolve the patentability issues herein. Petitioner's grounds are based on PO's allegations that the '834 patent covers Petitioner's SAPIEN 3 Ultra valve and the scope of the claims as asserted by PO in litigation. (Ex. 1122; Ex. 1123, 2, 24-261; *see also 10X Genomics, Inc. v. Bio-Rad Labs., Inc.*, IPR2020-00087, Paper 9, at 9-10, 15-19 (P.T.A.B. Apr. 27, 2020) ("[W]e see no problem with Petitioner relying on statements by [PO] in the related district court action in which [PO] took a position on the scope of a challenged claim."); *Nintendo Co. v. Gamevice, Inc.*, IPR2018-01521, Paper 7, at 7, n.5 (P.T.A.B. Mar. 11, 2019). Petitioner reserves its

right to propose claim constructions for the ’834 patent in district court and to contest PO’s infringement allegations.

VIII. PROPOSED GROUNDS FOR UNPATENTABILITY

A. Grounds 1-2: Claims 1-6, 8-18 Obvious Over Spenser *or* Levi and Spenser II

Spenser (left) and Levi (right) describe heart valves having a frame, inner polymeric covering, and leaflet assembly:

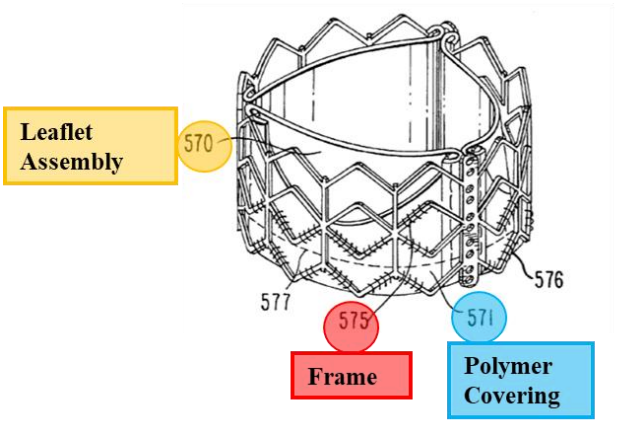

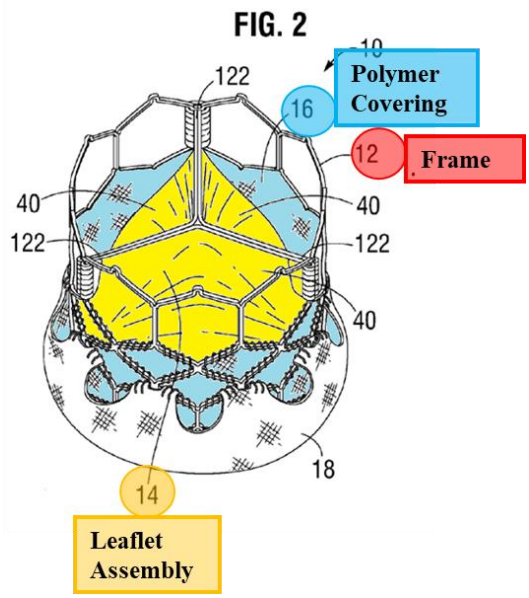

(Ex. 1010, 11:66-12:17, Fig. 44a; Ex. 1008, Fig. 2.) Levi also discloses an outer fabric skirt secured to the frame’s exterior surface for preventing PVL. (Ex. 1008, 13:50-66, 17:12-18, Figs. 3, 59.)

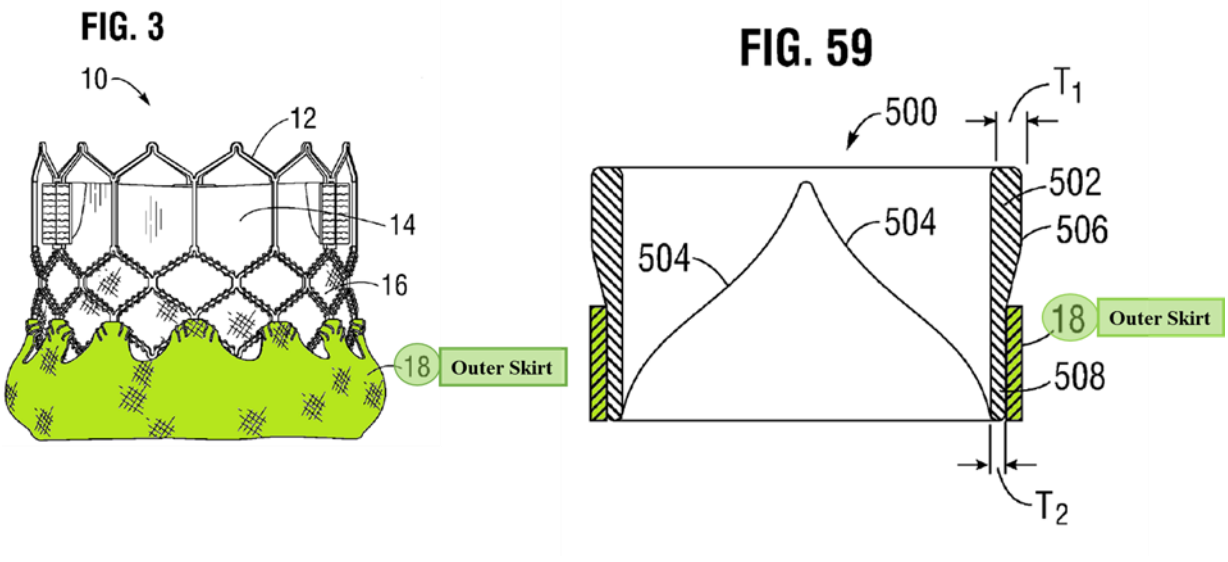

Spenser II discloses similar heart valves having fibrous compressible materials secured to the exterior surface of the frame:

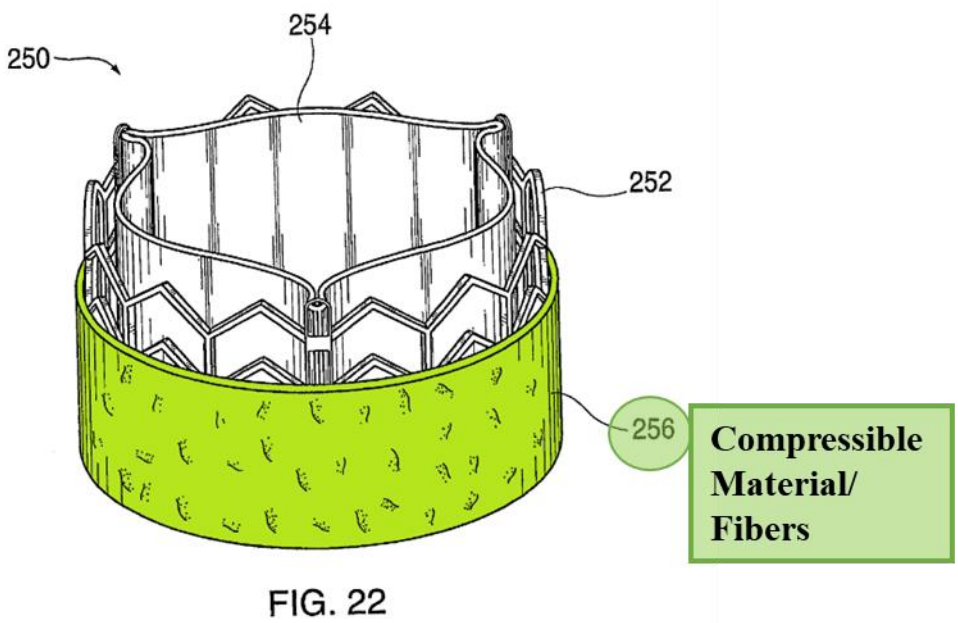

(Ex. 1011, [00144]-[00145], Fig. 22.)

In the prior IPRs, the Board concluded that POSITAs would have found it

obvious to combine Spenser II's compressible materials with Spenser's valves. (*See* Ex. 1117; Ex. 1118; Ex. 1119.) For similar reasons, POSITAs would have found it obvious to substitute Spenser II's compressible materials for Levi's outer skirt. (Ex. 1003, ¶122-125; *infra* §VIII.A.1.f.ii.) Thus, Spenser ***or*** Levi combined with Spenser II renders the challenged claims obvious. (Ex. 1003, ¶¶93-246.)

1. <u>Claim 1</u>

Spenser ***or*** Levi combined with Spenser II renders claim 1 obvious. (Ex. 1003, ¶¶96-155.)

a. <u>Preamble</u>

If the preamble is limiting, Spenser, Levi, and Spenser II all disclose an "endovascular prosthetic heart valve for use in a patient." (Ex. 1010, 1:13-15, 2:6-12, 5:17-25, 5:65-6:3, 17:19-18:43; Ex. 1003, ¶¶97-101.) The Board previously found that "Spenser and Spenser II both expressly teach that their TAVRs are meant to be capable of being delivered endovascularly." (Ex. 1117, 57.). Therefore, PO is collaterally estopped from disputing that the prior art discloses this limitation. *See also infra* §VIII.A.1.g (demonstrating how references disclose limitation).

b. <u>Frame</u>

Spenser and Levi disclose "a frame formed of a plurality of struts that cooperate to form a plurality of cells." (Ex. 1003, ¶¶102-104.)

Spenser's Figure 44a illustrates a prosthetic valve that includes "frame 575":

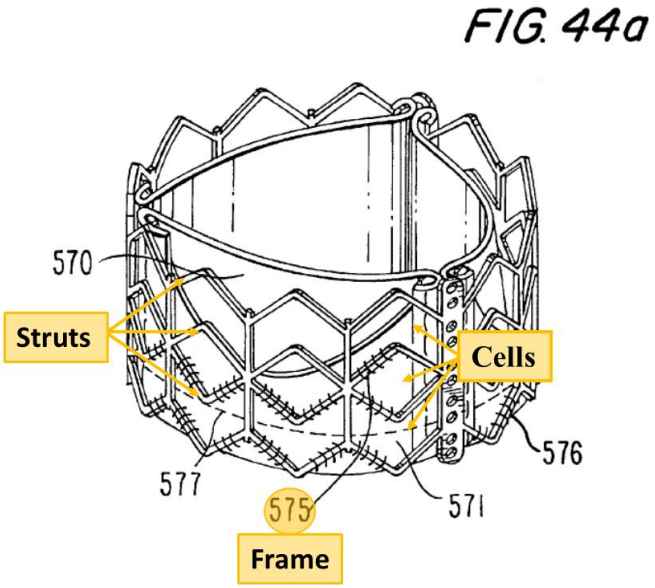

(Ex. 1010, 19:5-13, 26:30-34.) The frame is formed of a plurality of struts that form a plurality of cells. (*Id.*, Fig. 44a-44b; Ex. 1003, ¶103.)

Levi discloses a frame formed from a plurality of struts that form a plurality of cells:

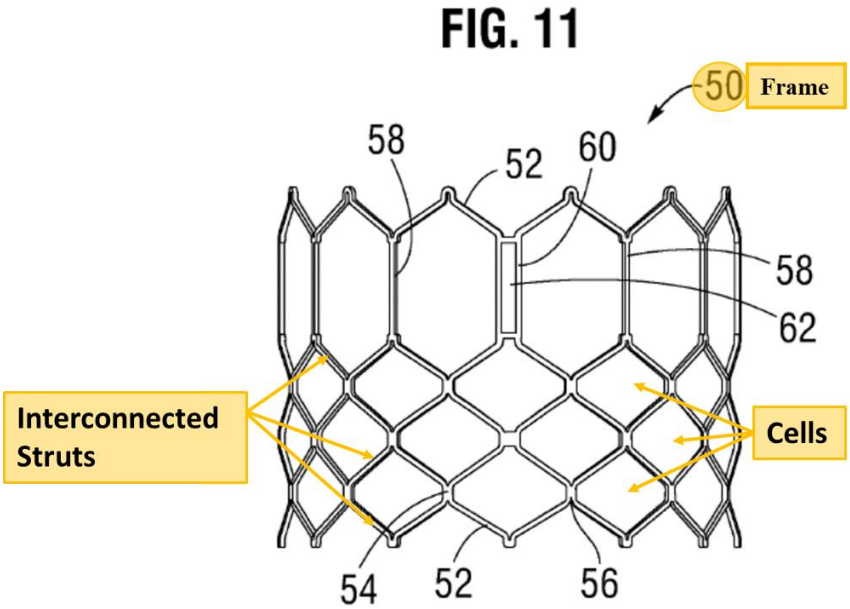

(Ex. 1008, 6:17-7:3, Fig. 11; Ex. 1003, ¶104.)

c. <u>Radially Expandable</u>

Spenser and Levi disclose "wherein the frame is radially expandable from a radially compressed orientation to a radially expanded orientation." (Ex. 1003, ¶¶105-106.)

Spenser's valve "has the ability to change its diameter from about 4 mm [compressed orientation] to about 25 mm [expanded orientation]." (Ex. 1010, 27:67-28:2.) Levi's valve is also "radially collapsible and expandable." (Ex. 1008, Abstract, 6:20-24.)

d. <u>Leaflet Assembly</u>

Spenser and Levi disclose "a leaflet assembly within the frame." (Ex. 1003, ¶¶107-109.)

Spenser's Figure 44a includes "pericardial leaflets 570," which are a "leaflet assembly" within frame 575:

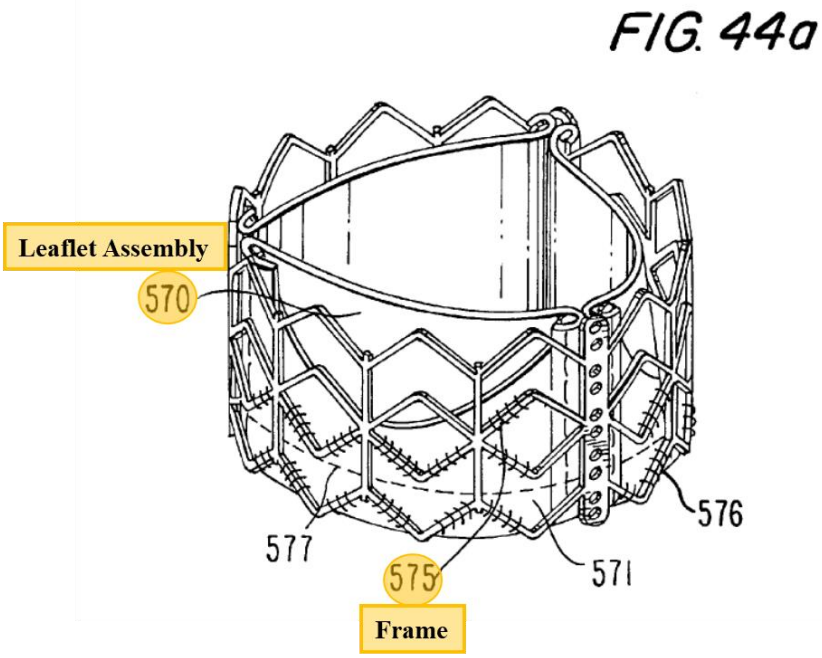

(Ex. 1010, 26:34-37, Figs. 44a-44c; Ex. 1003, ¶108.)

Levi discloses a "valvular structure 14 [that] can comprise three leaflets 40," forming a leaflet assembly within frame 12:

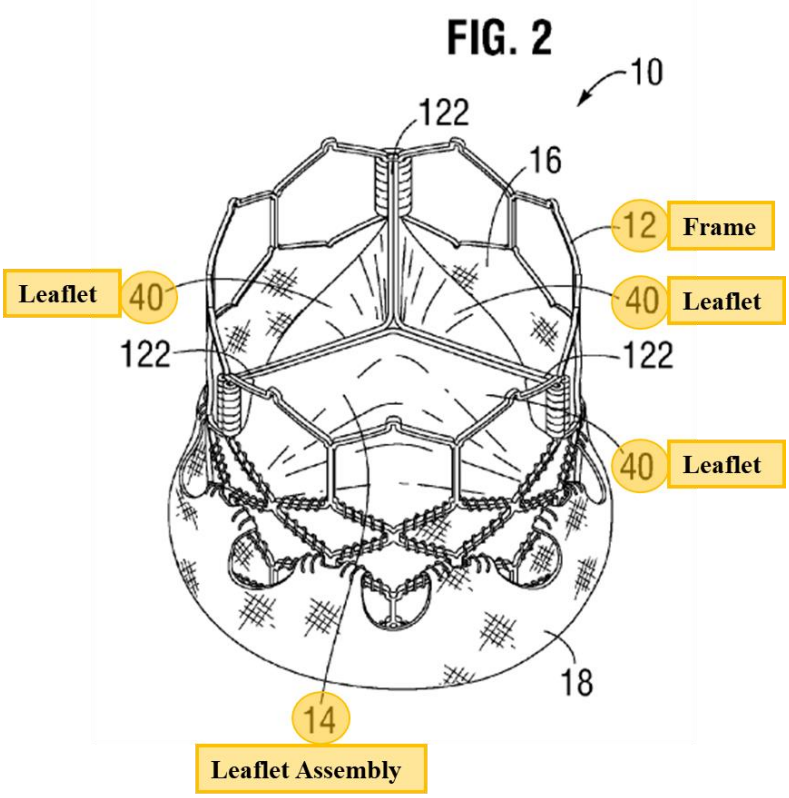

(Ex. 1008, 5:59-60, Fig. 2; Ex. 1003, ¶109.)

e. <u>Polymer Covering</u>

Spenser and Levi disclose "a polymer covering, wherein the polymer covering is attached to the leaflet assembly and positioned radially inwardly of the frame and radially outwardly of the leaflet assembly." (Ex. 1003, ¶¶110-114.)

Spenser's Figure 44a includes "additional pieces of PET" for "sealing and protecting the pericardium." (Ex. 1010, 26:30-34, Figs. 44a-44c.) The "pericardium" includes a leaflet assembly formed of leaflets 570, and the piece of PET 571 is a "polymer covering." (*Id.*, 26:30-54; Ex. 1003, ¶111.) As shown below,

PET 571[4] [blue] is attached to the leaflets via suture 577 and positioned radially outwardly of the leaflet assembly 570 and radially inwardly of the frame 575:

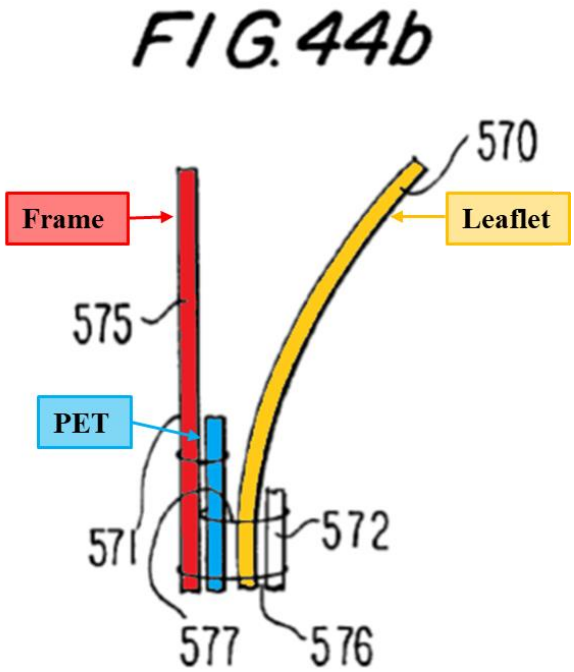

(Ex. 1010, 26:30-54, Fig. 44b (PET 571 is positioned "between the leaflets [570 yellow] and frame [575 red]"); *see also id.*, Fig. 44a.)

Levi discloses an "inner skirt 16 … to assist in forming a good seal between the valve and the native annulus by blocking the flow of blood through the open cells of frame 12 below the lower edge of the leaflets." (Ex. 1008, 9:7-11.) The inner

[4] In Fig. 44b, the lead line for 571 points to the frame [red]. This is a drafter's error. The lead line for PET layer 571 should point to the middle layer [blue]. (Ex. 1010, 26:40-42; Ex. 1003, ¶112 n.4.)

skirt may be constructed of "polyethylene terephthalate (PET)" and is a "polymer covering." (*Id.*, 9:11-16; Ex. 1003, ¶114.) The inner skirt is attached to the leaflet assembly "via one or more thin PET reinforcing strips." (Ex. 1008, 9:25-29.) Levi's inner skirt [blue] is positioned radially outwardly of the leaflet assembly [yellow] and radially inwardly of the frame [red]:

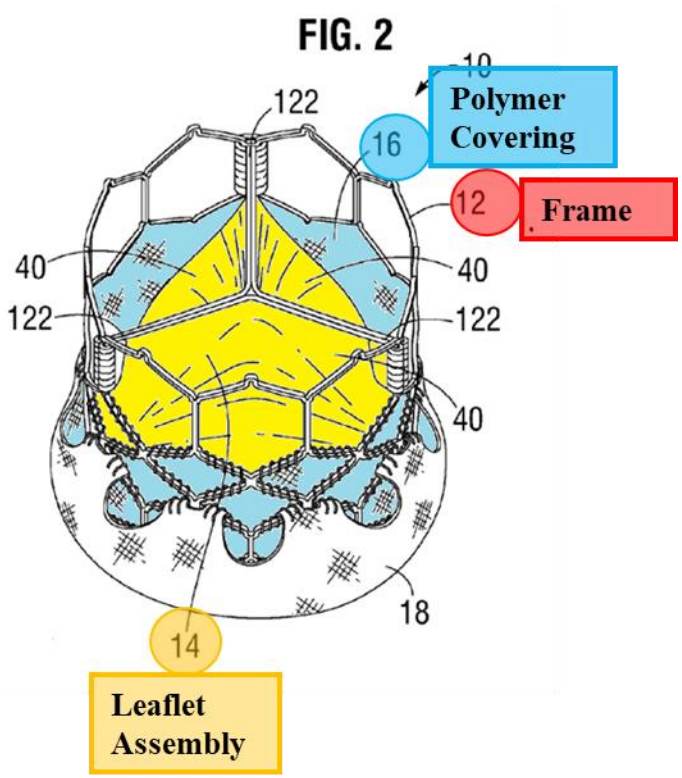

(Ex. 1008, Fig. 2; Ex. 1003, ¶114.)

f. <u>First Plurality of Fibers</u>

Spenser ***or*** Levi in combination with Spenser II renders obvious "a first plurality of fibers that extend away from the frame." (Ex. 1003, ¶¶115-125.)

Spenser II discloses, "[t]o reduce or prevent paravalvular leakage, a layer of compressible material 256 is disposed along an outer surface of the stent structure 252":

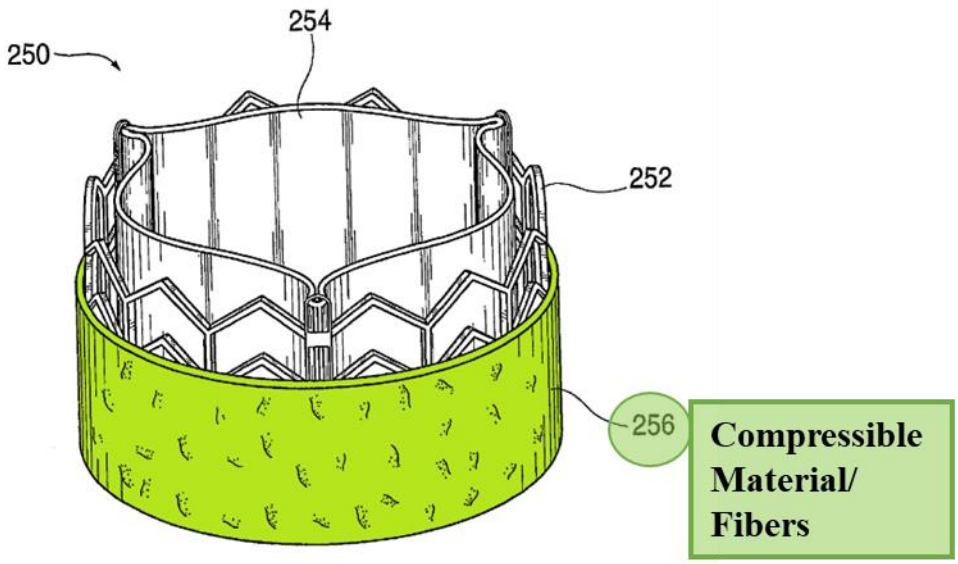

FIG. 22

(Ex. 1011, [00145], Fig. 22.) "In certain configurations, the compressible material 256 may resemble a cloth or fabric having small fibers extending from the surface of the material." (*Id*.) The fibers extending from the surface of the material are the "first plurality of fibers." (Ex. 1003, ¶117.)

i. <u>Spenser and Spenser II</u>

The Board previously found that "Spenser II provides, and the prior art Norris provide ample motivation for combining a compressible cloth, as a sealing material, with the TAVR disclosed by Spenser." (Ex. 1117, 64; *see also* Ex. 1118, 68; Ex.

1119, 80-81.) Spenser and Spenser II are closely related patents, sharing three common inventors, and Spenser II explicitly proposes improvements to the valves described in Spenser's U.S. Publication No. 2003/0153974 (Ex. 1015). (*See* Ex. 1011, [0009-00010] (explaining that Spenser's parent application describes similar heart valves but does not address "leaks that can occur around the implanted valve").) Given this relationship, POSITAs would have reasonably expected that features described in one patent would apply to the other. (Ex. 1003, ¶119.) Moreover, the valves in Spenser and Spenser II comprise balloon-expandable, metallic, gridded frames that surround leaflet assemblies. (*Id*.) Given these similarities, POSITAs would have reasonably expected that the valve features described in one reference would apply to the valves described in another, and POSITAs would have been motivated to use Spenser II's compressible material to reduce PVL with Spenser's valves. (*Id*.) Further, adding Spenser II's compressible material to Spenser's valves would merely entail applying Spenser II's known technique for reducing PVL (adding an outer compressible material) to Spenser's known valves, which were ready for improvement and would yield predictable results. *KSR Int'l Co. v. Teleflex. Inc.*, 550 U.S. 398, 416 (2007); (Ex. 1003, ¶120.)

ii. Levi and Spenser II

Levi discloses an outer fabric skirt 18 secured to the exterior surface of the frame for preventing PVL. (Ex. 1008, 13:50-53, 13:62-66, 17:12-18.)

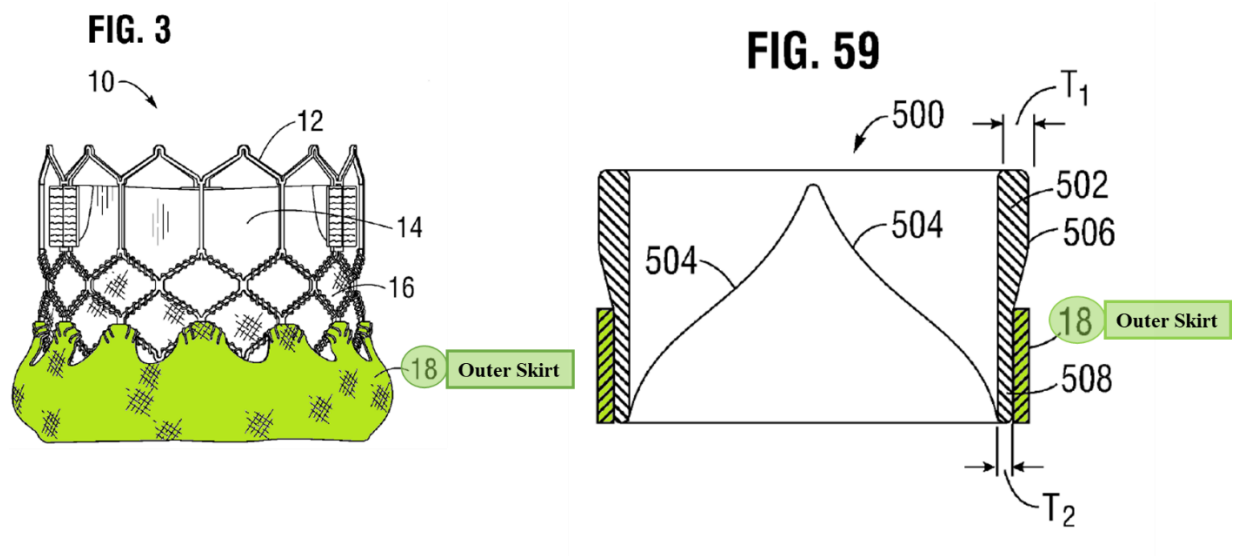

(*Id.*, Figs. 3, 59.)

POSITAs would have found it obvious to replace Levi's outer skirt with Spenser II's compressible material because the skirt and material are interchangeable. (Ex. 1003, ¶¶122-123.) While the specific materials have slightly different constructions, they were both designed for use with balloon-expandable heart valves to prevent PVL. (*Id.*; Ex. 1011, [00144], Ex. 1008, 6:17-28.)

Moreover, a finite number of methods to address PVL existed in November 2012. (Ex. 1003, ¶123.) Spenser II and Levi disclose two such methods. (*Id.*) POSITAs would have found it obvious to select one of these finite, predictable

solutions and would have reasonably expected success in doing so. (*Id.*) POSITAs would have found it obvious to try each material because the different constructions provide potential advantages. (*Id.*) For example, Spenser II's compressible material "may be adapted to encourage coagulation of blood to further fill the gaps and prevent leakage." (Ex. 1011, [00145].) Ultimately, the combination of Levi with Spenser II would have merely entailed substitution of one known element (Spenser II's compressible material) for another (Levi's outer skirt) to yield the predictable results of reducing PVL. *See KSR*, 550 U.S. at 416; (Ex. 1003, ¶¶122-123.)

POSITAs would have reasonably expected success in substituting Spenser II's compressible material for Levi's outer skirt. (Ex. 1003, ¶¶124-125.) The valve frames in Spenser II and Levi share many common features, including being balloon-expandable and formed of rows of open cells that are interconnected by metal struts. (*Id.*) Moreover, Levi suggests adding other components, like an outer skirt or seal, to the inflow portion of the frame, stating "if additional components are mounted to that portion of the valve, such as an outer skirt 18, the reduced profile of that portion of the valve can help offset or minimize the increase in diameter caused by the additional component." (Ex. 1008, 16:41-45.) Levi discloses methods to reduce the frame's diameter at the inlet, or to modify the leaflets to reduce the frame size, to create room for an outer seal. (*Id.*, 16:24-17:18.) POSITAs would have

understood they could utilize one or more of these methods to substitute Spenser II's compressible material for Levi's outer skirt. (Ex. 1003, ¶¶124-125)

g. <u>Endovascularly Deployed</u>

Claim 1 next recites, "wherein the prosthetic heart valve is endovascularly deployed through a femoral artery of the patient."[5] This statement of intended use is not limiting. However, if it is limiting, Spenser ***or*** Levi in combination with Spenser II renders this limitation obvious. (Ex. 1003, ¶¶126-140.)

i. <u>Spenser and Spenser II</u>

The Board previously concluded that POSITAs would have expected the THV formed from combining Spenser and Spenser II could be delivered endovascularly. (Ex. 1117, 53-64; Ex. 1118, 57-68; Ex. 1119, 69-80.) The Board explained, "the 12F (4.0 mm) diameter of the valve taught by Spenser . . . is well within the maximum allowable diameter of 24F [for transfemoral delivery] argued by [PO], such that [POSITAs] could reasonabl[y] understand that there would be sufficient additional space to accommodate the 'compressible … cloth or fabric,' which Spenser II teaches can also be delivered endovascularly." (Ex. 1117, 57.) Thus, the

[5] Petitioner reserves the right to argue that this limitation renders the claims indefinite.

Board has determined the combination of Spenser and Spenser II would be reasonably understood to have a crimped profile less than 24F, which would permit endovascular delivery through the femoral artery. (*See id.*)

The Board's findings are correct. Spenser states, "the present invention deals with the possibility of implanting the valve percutaneously, i.e., inserting the valve assembly on a delivery device similar to a catheter, then implanting the valve at the desired location via a large blood vessel such as the femoral artery, in a procedure similar to other known interventional cardiovascular procedures." (Ex. 1010, 2:6-12.) Spenser's valve may be crimped to a diameter that is "suitable for percutaneous catheterization and deployment." (*Id.*, 14:12-14; *see also id.*, 12:8-17, 12:28-36, 13:26-54.) Spenser also discloses endovascularly implanting the prosthetic valve in a patient's native aortic valve using a balloon catheter that is guided through the patient's vasculature to the patient's valve. (*Id.*, 5:17-6:36, 17:19-18:43; Ex. 1003, ¶128.)

Spenser's Figure 44a illustrates a "preferred embodiment of the present invention[.]" (Ex. 1010, 26:30-34.) Therefore, POSITAs would have understood Spenser's disclosure of endovascular delivery through the femoral artery applies to Figure 44a. (*See id.*, 2:6-12, 26:30-34; Ex. 1003, ¶129.)

Spenser II discloses, "The present invention provides a series of new percutaneous concepts of paravalvular repairs including … built-in means for leak prevention[.]" (Ex. 1011, Abstract; *see also id.*, [0014].) Spenser II explains, "[p]ercutaneous introduction of medical devices is a preferred surgical procedure for it involves making only a very small perforation in the patient's skin (usually in the groin or armpit area) under local anesthetic sedation." (*Id*., [0012].) Introduction of the valve through a small perforation in the groin area refers to, at least, endovascular delivery through the femoral artery. (Ex. 1003, ¶130.)

POSITAs would have reasonably expected Spenser's valve to remain suitable for endovascular delivery after the addition of Spenser II's compressible material. (Ex. 1003, ¶131.) Spenser teaches the "maximal size of a catheter inserted into the femoral artery should be no more than 8 mm in diameter." (Ex. 1010, 27:65-67.) Spenser's prosthetic valve "has the ability to change its diameter from about 4 mm to about 25 mm." (*Id.*, 27:67-28:2.)

Spenser II discloses "in one preferred embodiment," the compressible material "has a thickness ranging from about 1 to 5 mm" when the material is uncompressed. (Ex. 1011, [00145].) POSITAs would have reasonably expected that adding a compressible material 1 mm thick to Spenser's 4-mm valve would have resulted in a device suitable for endovascular delivery through the femoral artery.

(Ex. 1003, ¶132; *see also* Ex. 1117, 57.) Additionally, POSITAs would have recognized Spenser II encompasses thin and highly compressible materials that will result in a low profile. (Ex. 1003, ¶132.) Thus, POSITAs would have reasonably expected the combination of Spenser II's compressible material and Spenser's Figure 44a to be endovascularly deliverable through the femoral artery. (*Id*.) "This becomes particularly evident when one looks to the teachings of … Norris." (Ex. 1117, 58; Ex. 1118, 62.)

Norris discloses a fabric, suitable for sealing a heart valve, which is highly compressible to enable "a small enough delivery catheter to reach a target implant site." (Ex. 1074, 8:23-39.) Norris explains, "In the compressed configuration 41, the fabric 10 can have a thickness 44 in the range of about 0.004–0.008 inches [0.102–0.203 mm] … [which] can allow the fabric 10 to be easily inserted into a delivery catheter along with an intraluminal medical device." (*Id.*, 7:66-8:3.) Norris's teachings would have reinforced the reasonable expectation of success in endovascularly delivering Spenser's valve with Spenser II's compressible material through the femoral artery. (Ex. 1003, ¶133.)

Additionally, POSITAs would have recognized that Spenser II's disclosure is broad, and that many types of fibrous, compressible sealing materials with a range of thicknesses and porosities could be used consistent with Spenser II's teachings.

(Ex. 1003, ¶132.) POSITAs would have found it obvious to select one of the finite, existing compressible materials to enable endovascular delivery through the femoral artery, particularly given the disclosure of such delivery in Spenser and Spenser II. (*Id.*, ¶132.)

ii. <u>Levi and Spenser II</u>

Levi discloses "collapsible transcatheter heart valves [which] can be percutaneously introduced in a compressed state on a catheter and expanded in the desired position by balloon inflation or by utilization of a self-expanding frame or stent." (Ex. 1008, 1:57-67.) POSITAs would have understood Levi's percutaneous delivery to include transfemoral delivery given Levi's disclosure that the "diameter of the crimped profile is important because it directly influences the physician's ability to advance the transcatheter heart valve through the femoral artery or vein." (*Id.*, 2:3-5.) Levi also incorporates by reference the percutaneous methods described in U.S. Patent No. 6,730,118 (Spenser's parent), which include endovascular delivery through the femoral artery. (Ex. 1008, 1:57-67; Ex. 1051, 2:3-13.) Indeed, during the prior IPRs, PO admitted Levi discloses transfemoral delivery. (Ex. 1124, 37.)

Levi also discloses several features to enable endovascular delivery through the femoral artery, including having: a low-profile frame constructed of nickel-

cobalt-chromium-molybdenum alloy; larger open cells in the frame's uppermost row that allow portions of the prosthetic leaflets to protrude outwardly when crimped; a frame with varied thickness along its length; window frame portions that are depressed radially inwardly relative to other portions of the frame; low-profile tapered leaflets; and an inner skirt with non-perpendicular fibers to allow for greater axial elongation. (*See* Ex. 1008, 6:46-49, 7:10-12; Ex. 1003, ¶¶136-137.)

POSITAs would have reasonably expected that, after replacing Levi's outer skirt with Spenser II's compressible material, the resulting device would remain suitable for endovascular delivery through the femoral artery. (*Id.*) Levi discloses, "When crimped, the frame 12 has a reduced diameter region extending along a portion of the frame … that generally corresponds to the region of the frame covered by the outer skirt 18" so that the outer skirt "does not increase the overall crimp profile of the valve." (Ex. 1008, 8:46-54; *see also id.*, 2:22-35, 14:22-35, 16:38-45, 17:14-18.) POSITAs would have had a finite number of locations to attach Spenser II's compressible material to Levi's frame and would have at least found it obvious to try covering the reduced diameter region so that the compressible material would not disadvantageously increase the crimp profile. (*Id.*, 8:46-54; Ex. 1003, ¶139.)

Additionally, Levi expressly suggests adding other components to the inflow portion of the outer frame, stating "if additional components are mounted to that

portion of the valve, such as an outer skirt 18, the reduced profile of that portion of the valve can help offset or minimize the increase in diameter caused by the additional component." (Ex. 1008, 16:41-45; *see also* Ex. 1003, ¶140.) POSITAs would have understood "additional component[s]" to include Spenser II's compressible material. For these reasons, POSITAs would have reasonably expected success in adding Spenser II's compressible material to Levi's valve and endovascularly delivering the combined valve through a patient's femoral artery. (Ex. 1003, ¶¶135-140.)

Additionally, POSITAs would have been aware of many types of fibrous, compressible sealing materials with a range of thicknesses and porosities that could be used consistent with Spenser II's teaching and would have found it obvious to select an appropriate compressible material that would enable endovascular delivery through a patient's femoral artery, particularly given the disclosure of such delivery in Levi and Spenser II. (*Id.*, ¶141.)

h. <u>First Plurality of Fibers Pressed Against Native Leaflets</u>

Spenser ***or*** Levi and Spenser II renders obvious "wherein the first plurality of fibers is configured for being pressed against native leaflets of the patient when the prosthetic heart valve is endovascularly deployed in the radially expanded orientation within a native heart valve annulus of the patient." (Ex. 1003, ¶¶142-

148.)

i. Spenser and Spenser II

The Board found that Spenser and Spenser II render this limitation obvious in a prior IPR. (Ex. 1119, 83-86.) The Board found, POSITAs "reading Spenser II, would understand that, if the compressible material that is disposed along the outer surface of the stent extends entirely around the stent, then it would, necessarily, be in radial alignment with the native leaflets around the circumference of where the outer frame presses the native leaflets laterally." (*Id.*)

The Board's finding was correct. Spenser's Figure 4 (below) shows the valve deployed "in a natural aortic valve position in accordance with the present invention":

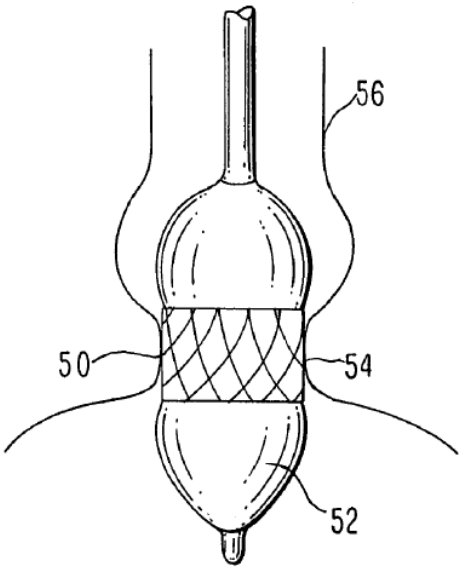

(Ex. 1010, 8:66-67, 14:15-20, Fig. 4; *see also id.*, 5:17-6:36, 17:19-18:43, Figs. 17a-

17b.) As shown, at least two rows of the valve frame press against the patient's aortic annulus. (Ex. 1003, ¶144.) Although not shown in Figure 4, POSITAs would have understood the valve also presses against the patient's native leaflets, which are attached to the annulus and extend distally therefrom. (Ex. 1003, ¶¶144.)

Spenser II's compressible material expands upon implantation and "fills the gaps between the stented valve and the surrounding tissue," which "creates a mechanical seal that prevents paravalvular leakage." (Ex. 1011, [00145].) When added to Spenser's valve, the compressible material would extend over at least the bottom two rows of grids formed by the frame, as shown in the below comparison of Spenser II's Figure 22 (left) and Spenser's Figure 44a (right):

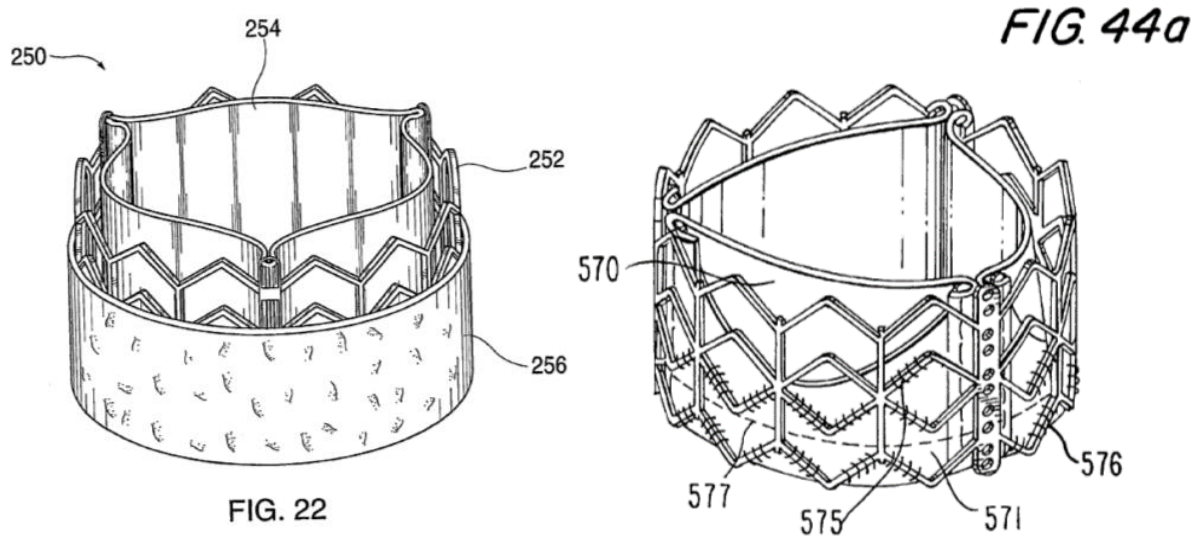

(Ex. 1010, Fig. 44a; Fig. 1011, Fig. 22; Ex. 1003, ¶145.) Thus, when added to Spenser 44a's valve, the compressible material would press against the native

annulus and aortic leaflets. (Ex. 1003, ¶146.)

ii. <u>Levi and Spenser II</u>

Levi's outer skirt "fill[s] in gaps between the frame 12 and the surrounding native annulus to assist in forming a good fluid-tight seal between the valve and the native annulus." (Ex. 1008, 14:3-7.) When the outer skirt "form[s] a good fluid-tight seal between the valve and the native annulus," the fibers of the outer skirt also seal against the native leaflets, which are attached to the native annulus and extend distally therefrom. (Ex. 1003, ¶147.) PO has previously admitted Levi's outer skirt would "extend[] into crevices created by the native leaflets." (Ex. 1046, 21.)

If Levi's outer skirt were replaced with Spenser II's compressible material, the compressible material, rather than the outer skirt, would press against the native leaflets. (Ex. 1003, ¶¶147-148.) POSITAs would have been motivated and had a reasonable expectation of success in covering the same portion of the valve with Spenser II's compressible material as is covered with Levi's outer skirt. Thus, if the outer skirt presses against the leaflets, as admitted by PO, then so would the compressible material. (*Id.*)

i. <u>Second Plurality of Fibers</u>

Spenser ***or*** Levi in combination with Spenser II renders obvious "a second plurality of fibers that is positioned radially inwardly from the first plurality of fibers,

wherein the second plurality of fibers is in direct contact with the frame." (Ex. 1003, ¶¶149-156.)

Spenser II's compressible material "is disposed along an outer surface of the stent structure 252" and is "in direct contact with the frame":

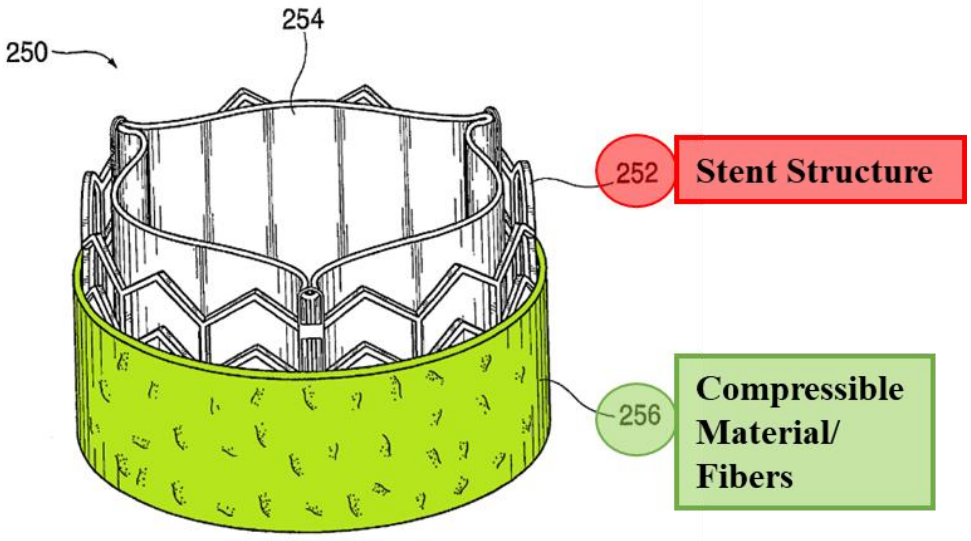

FIG. 22

(Ex. 1011, [00145], Fig.22; Ex. 1003, ¶153.) "In certain configurations, the compressible material may resemble a cloth or fabric having small fibers extending from the surface of the material." (Ex. 1011, [00145].) The fibers extending from the surface of the material are the first plurality of fibers. (*Id.*, Fig. 22; Ex. 1003, ¶150.) Additionally, the Board has previously found Spenser II's compressible material includes a cloth/fabric of fibers, forming a "graft covering," that is radially

inward from the outwardly extending fibers.[6] (Ex. 1120, 46-49.) This inner cloth/fabric layer is the "second plurality of fibers," which is positioned radially inwardly from the first plurality of fibers. (Ex. 1003, ¶¶150-152.)

Spenser's Figure 44a does not have a covering on the exterior of frame 575:

FIG. 44a

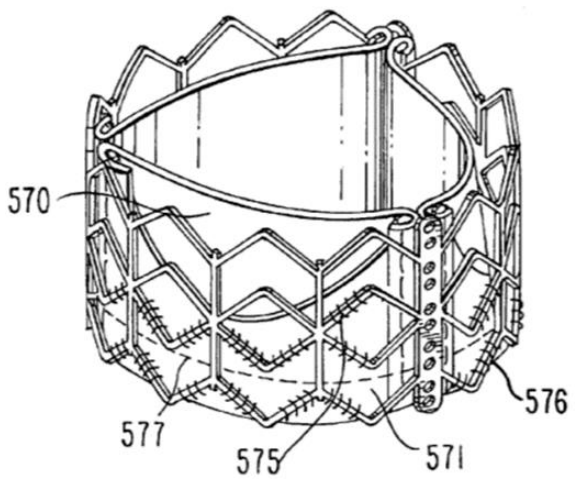

(Ex. 1010, Fig. 44a; Ex. 1003, ¶154.) Similarly, Levi does not include a covering on the exterior of the frame besides the outer skirt:

[6] One embodiment of Spenser II's compressible material includes an inner layer, but Petitioner maintains that Spenser II is broader and not limited to materials having an inner layer.

FIG. 20

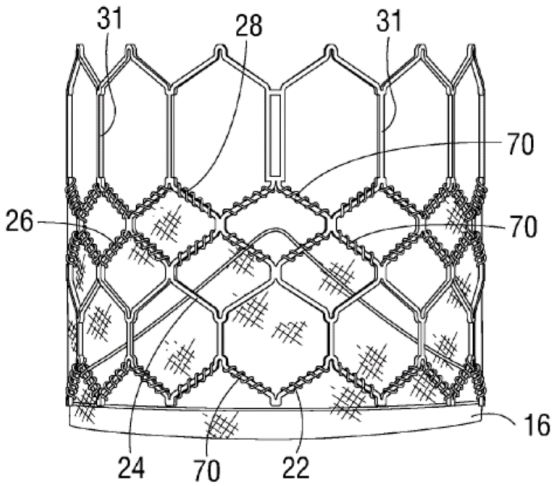

(Ex. 1008, Fig. 20; Ex. 1003, ¶155.) Therefore, if Spenser II's compressible material were added to Spenser's frame or replaced Levi's outer skirt, the second plurality of fibers would be in "direct contact with the frame." (Ex. 1003, ¶¶154-155.)

PO's arguments during prosecution and its infringement contentions in litigation further confirm this analysis. During prosecution, PO argued the outer skirt of Petitioner's SAPIEN 3 Ultra valve meets the "second plurality of fibers" limitation because it includes "a first array of fibers forming a mesh, and a second array of fibers that end therefrom and into engagement with native leaflets of the patient." (Ex. 1002, 1152-1153.) PO has made similar contentions in the litigation. (*See* Ex. 1123, 75-78.) Petitioner disagrees with PO's characterization of SAPIEN 3 Ultra; however, under PO's position, Spenser II discloses this limitation. In one embodiment, Spenser II's compressible material includes a base layer of fibers

"forming a mesh" and a plurality of fibers extending radially outwardly "that end therefrom and into engagement with native leaflets." (Ex. 1003, ¶151.)

Many such compressible materials were known in the prior art. For example, Norris discloses a compressible, resilient fabric for providing sealing to medical devices, including prosthetic heart valves, that includes a "ground layer 20 of knitted yarn, and a loop layer 30 comprising a plurality of loops 32 of yarn 31, each loop 32 having a point 33 knit into the ground layer 20."

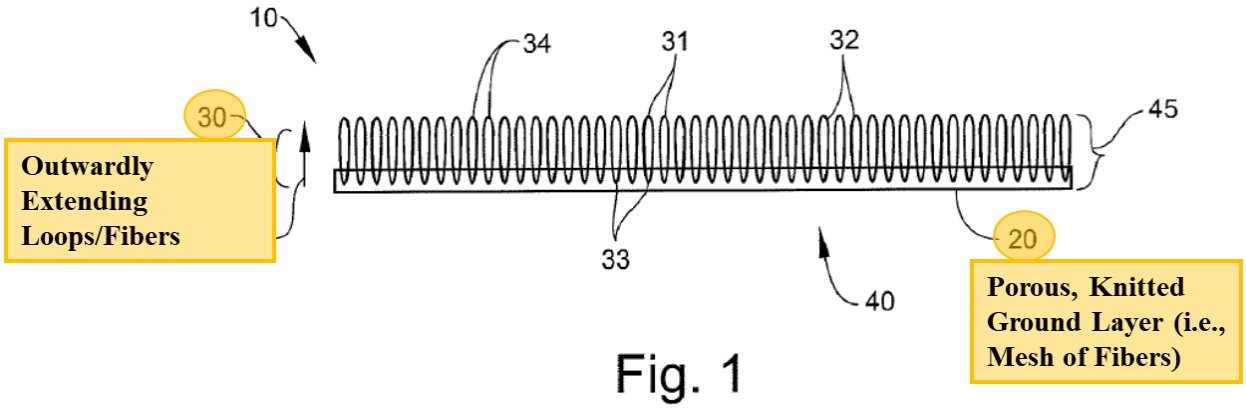

(Ex. 1074, 4:22-26, Fig. 1.)

2. <u>Claim 2</u>

Spenser ***or*** Levi in combination with Spenser II renders obvious "wherein the second plurality of fibers defines a spacing extending through a thickness thereof that is created by a distance between adjacent fibers, wherein the spacing extends to the frame." (Ex. 1003, ¶¶157-168.)

Spenser II's compressible material "may resemble a cloth or fabric having

small fibers extending from the surface of the material." (Ex. 1011, [00145].) POSITAs would have understood that "the surface of the material" or base layer (e.g., second plurality of fibers) would define spacings extending through a thickness of the fibers created by a distance between adjacent fibers for several reasons. (Ex. 1003, ¶¶158-166.) First, Spenser II expressly describes the material as "compressible," which informs POSITAs that the material must have spaces between the fibers so that it can compress. (Ex. 1003, ¶162; *see also* Ex. 1109, 1048; Ex. 1074, 8:3-7, 8:45-48.) For a fabric or cloth, the spaces would need to exist in the fibrous *and* base layers. (Ex. 1003, ¶162.) If the base layer did not have spaces, it would not compress and could cause the entire material to bunch when the valve was crimped. (*Id*.) Second, Spenser II discloses that the compressible material "expands after deployment at a treatment site" and that "[a]s the compressible material expands, it fills the gaps between the stented valve and the surrounding tissue." (Ex. 1011, [00145].) The compressible material could expand to "fill[] the gaps" only if spaces existed between the fibers to create room for the expansion. (Ex. 1003, ¶163.) Third, Spenser II explains that the fibers can "encourage coagulation of blood to further fill the gaps and prevent leakage." (Ex. 1011, [00145].) POSITAs would have understood the compressible material must have spaces between the fibers comprising the second plurality of fibers to create

spaces/openings for the coagulation. (Ex. 1003, ¶164.) Finally, POSITAs would have recognized that Spenser II broadly discloses the compressible material and that Figure 22 illustrates only one possible configuration of the material. (*Id.*, ¶160.) POSITAs would have recognized that Figure 22 does not limit Spenser II's broad disclosure and is not meant to limit the compressible material to a single embodiment. (*Id.*)

POSITAs also would have understood that in a porous material, such as Spenser II's compressible material, spacings would necessarily exist between the fibers of the material formed by distances between the adjacent fibers. (*Id*, ¶166.) These spacings would exist between adjacent fibers throughout the material, including the outward-facing surface and the inward-facing surface. (*Id.*) In fact, the prior art disclosed methods of coating cloths/fabrics with nonporous substances, such as a collagen or rubber coatings, to reduce the permeability of cloths. (*Id.*; Ex. 1108, 657; Ex. 1111, Summary; Ex. 1112, Summary.)

The spacings between the fibers in Spenser II's compressible material would "extend[] through a thickness" of the second plurality of fibers. (Ex. 1003, ¶166.) At least some of the spacings would also "extend[] to the frame" because the compressible material is disposed around and presses against the frame. (*Id.*, ¶167.)

Based on PO's infringement contentions, such a structure meets the limitations of claim 2. (*See* Ex. 1123, 78-80.)

Additionally, the '834 patent does not claim or disclose how to size or arrange the fibers to provide the claimed "spacing." (Ex. 1003, ¶158.) For example, the '834 patent never discloses the length or width of the fibers, the density of the fibers, or any required arrangement of fibers. (*Id.*) Consequently, PO cannot argue the selection of materials and adaptation of the compressible material to provide such a spacing would have been beyond a POSITA's skill. *See e.g., Smith & Nephew, Inc. v. Rea*, 721 F.3d 1371, 1380-81 (Fed. Cir. 2013) ("[A]n unclaimed and undisclosed feature … cannot be the basis for finding [a] patent to be non-obvious over the prior art."); *see also E.I. du Pont de Nemours v. Phillips Petroleum*, 849 F.2d 1430, 1433 (Fed. Cir. 1988); *TorPharm, Inc. v. Ranbaxy Pharms.*, 336 F.3d 1322, 1331 (Fed. Cir. 2003).

3. <u>Claim 3</u>

Spenser ***or*** Levi in combination with Spenser II render obvious "wherein the polymer covering extends further than a proximal end of the leaflet assembly." (Ex. 1003, ¶¶168-173.)

a. <u>Spenser</u>

Spenser discloses a "portion of the valve assembly 34 at an inlet zone 45 is

optionally rolled over support stent 32 at the inlet, making up a rolled sleeve [yellow], which enhances the sealing of the device at the valve inlet"[7]:

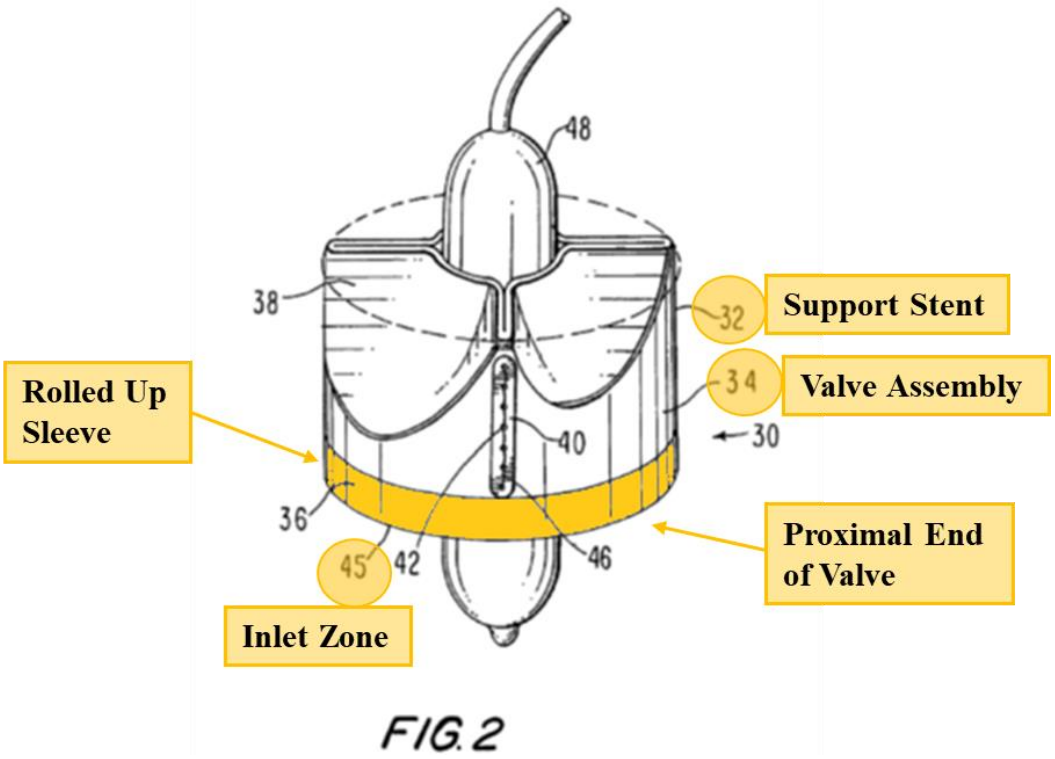

(Ex. 1010, 14:6-9, Fig. 2; *see also* 12:51-53.) POSITAs would have found it obvious to apply this feature to Figure 44a and extend Figure 44a's inner PET 571 proximally further than the leaflet assembly. (Ex. 1003, ¶169-171.) POSITAs would have been motivated to extend PET 571 to further "enhance[] the sealing of the device at the valve inlet." (Ex. 1010, 14:6-9, 12:51-53; Ex. 1003, ¶171.) POSITAs would have

[7] In Figure 2, the dashed lines indicate the support stent (not shown in full). (*Id.*, 13:63-66.)

understood that extending the inner PET fabric over the frame's proximal end would prevent blood from leaking between the PET 571 and frame 575 (*see* purple arrow). (Ex. 1003, ¶171.)

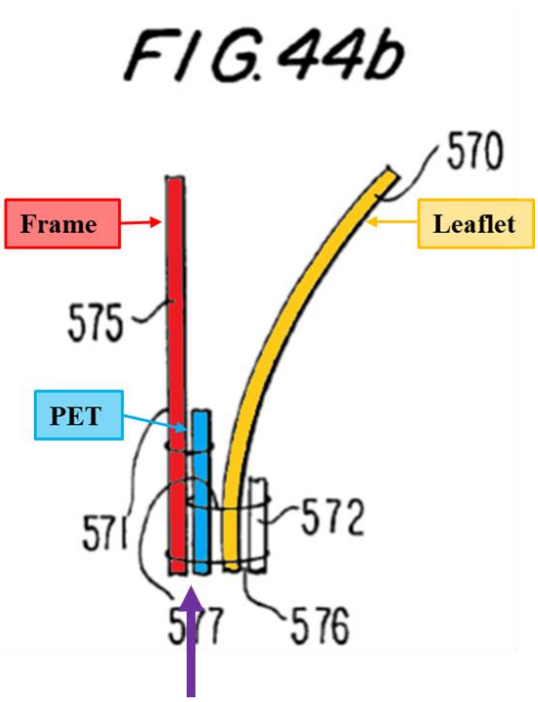

This motivation would not have been affected by the addition of Spenser II's compressible material because the compressible material serves a different purpose than the extended polymer covering. (Ex. 1003, ¶171.) Extending the polymer covering over the outer frame's proximal end prevents blood from leaking between the polymer covering and outer frame. (*Supra* §VII.A.1.e.) In contrast, the compressible material prevents blood from leaking between the THV and surrounding tissue. (Ex. 1011, [00145].)

POSITAs would have reasonably expected success in extending Figure 44a's

PET 571 because Spenser's Figures 2 and 44a describe similar THVs. (*See* Ex. 1010, 14:41-44, 26:30-54; Ex. 1003, ¶172.) Both THVs include an inner PET layer that is stitched to a balloon-expandable frame that has three parallel support beams for attaching the leaflets. (Ex. 1010, 13:62-14:3; 26:30-54, Figs. 2, 44a; *see also* 9a-9f.) POSITAs would have reasonably expected the teachings of Figure 2 to also apply to Figure 44a due to these similarities. (Ex. 1003, ¶172.)

b. <u>Levi</u>

Levi discloses an inner skirt sutured to the frame's inner surface. (*Supra* §VIII.A.1.e.) Levi also discloses that the lower edges of the valve leaflets are sutured to the inner skirt along suture line 154. (Ex. 1008, 11:10-14.) Levi's inner skirt extends proximally further than suture line 154 and the proximal end of the leaflet assembly:

FIG. 37

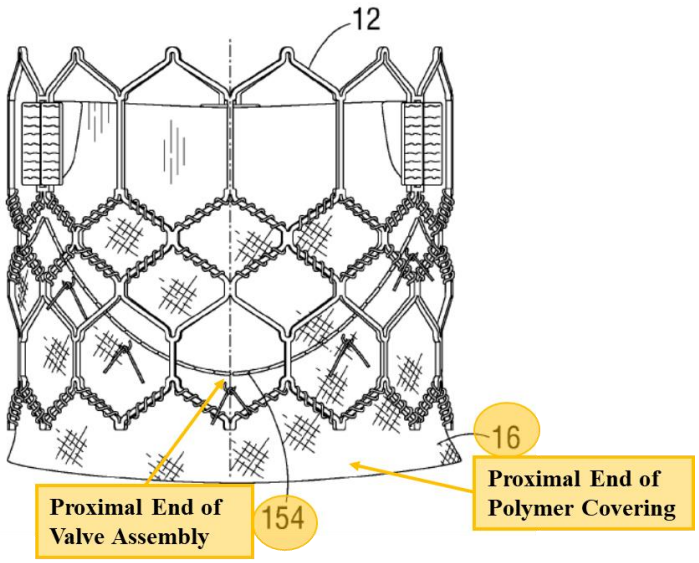

(*Id.*, Fig. 37.)

4. <u>Claim 4</u>

Spenser ***or*** Levi in combination with Spenser II renders obvious "wherein a distance that the first plurality of fibers extends from a centerline longitudinally through the frame varies along a length of the center line." (Ex. 1003, ¶¶174-175.)

The fibers of Spenser II's compressible material "may be straight, curved, or hook shaped." (Ex. 1011, [00145].) As illustrated by the speckled markings below, some fibers extend further out from the frame than others:

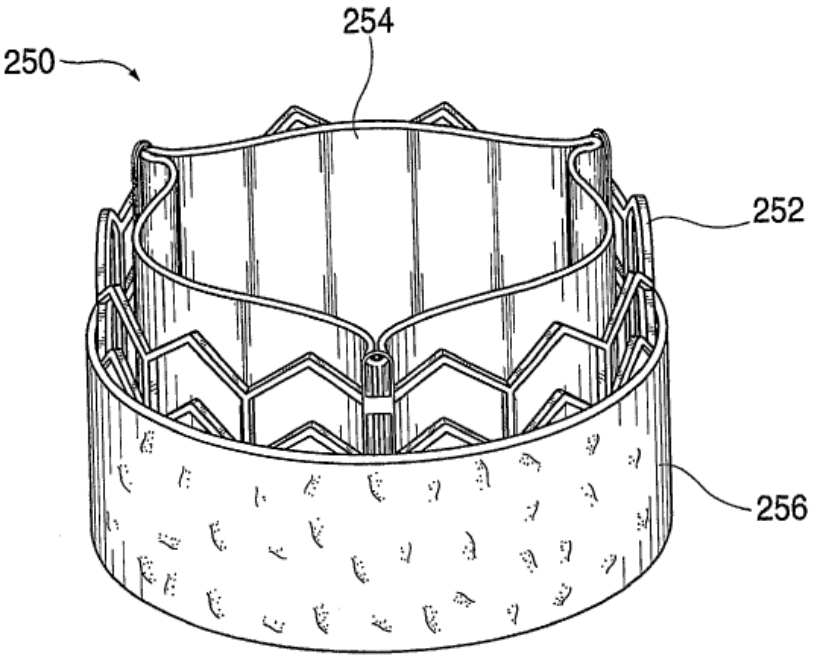

FIG. 22

(*Id.*, Fig. 22.) Thus, Spenser II's outwardly extending fibers extend to different distances relative to a centerline extending longitudinally through the frame along a

length of the centerline. (Ex. 1003, ¶175.)

5. <u>Claim 5</u>

Spenser ***or*** Levi in combination with Spenser II renders obvious "wherein the plurality of cells defines at least two rows of cells at an inflow end of the frame, wherein the first plurality of fibers extends over each of the at least two rows of cells." (Ex. 1003, ¶¶176-180.)

Spenser's Figure 44a illustrates two rows of cells at the frame's inflow end:

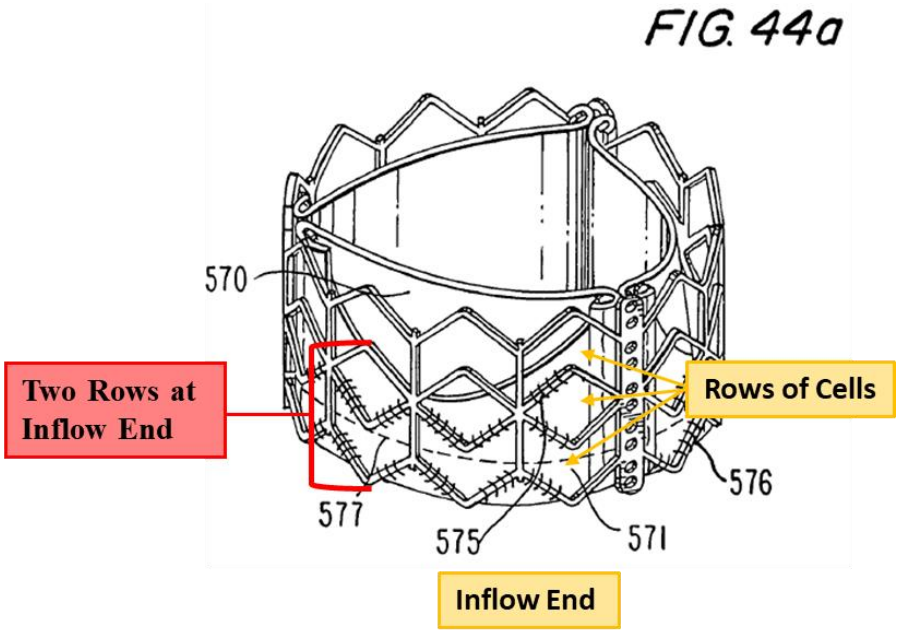

(Ex. 1010, Fig. 44a; Ex. 1003, ¶177.)

When added to Spenser's Figure 44a, Spenser II's compressible material would extend over at least the two rows of cells at the frame's inflow end for the reasons explained above. (*Supra* §VIII.A.H.i.) If this limitation requires the fibers

to ***entirely*** extend over two rows of cells, POSITAs would have found it obvious to slightly increase the height of Spenser II's compressible material, as taught in Levi's Figure 42 and given the finite number of options for the height of the material. (Ex. 1003, ¶179.)

Levi's frame includes two rows of cells at the inflow end:

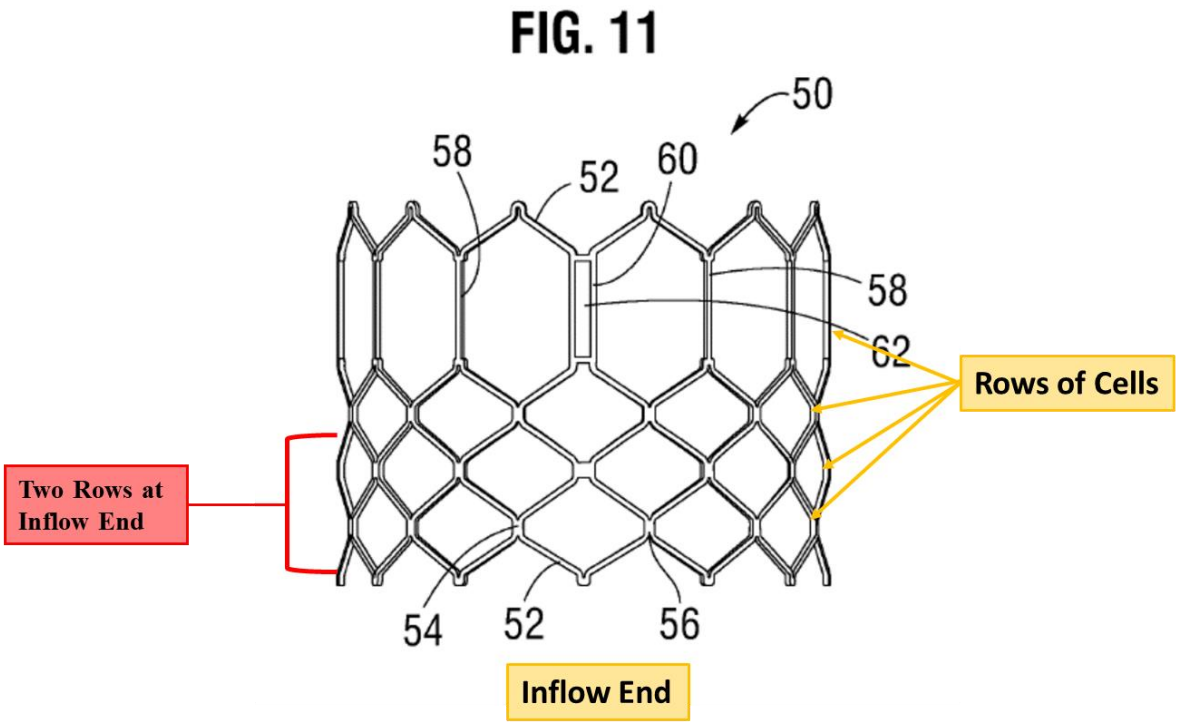

(Ex. 1008, Fig. 11.) A comparison of Figures 11 and 42 shows Levi's outer skirt extends over the two rows at the inflow end:

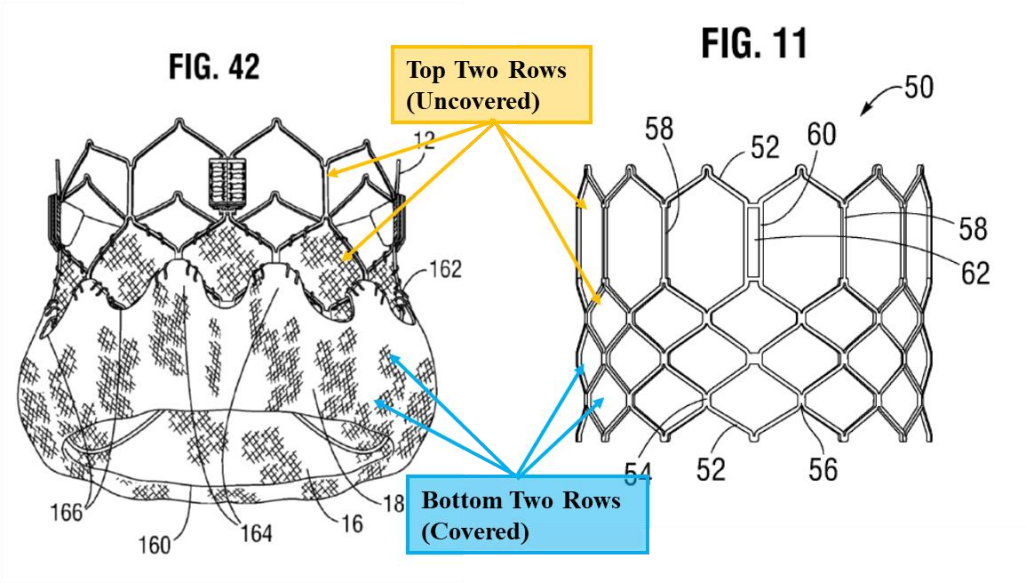

(*Id.*, Figs. 11, 42; Ex. 1003, ¶180.) Spenser II also discloses a sealing material extending over the bottom two rows of cells formed by the frame. (*Supra* §VIII.A.1.f.) POSITAs would have been motivated to attach Spenser II's compressible material to Levi's outer frame in the same way, and expected success in doing so, because the references demonstrate that extending a seal over the bottom two rows creates an effective seal. (Ex. 1003, ¶180.)

6. <u>Claim 6</u>

Spenser ***or*** Levi in combination with Spenser II renders obvious "wherein the first plurality of fibers and the second plurality of fibers are non-metallic." (Ex. 1003, ¶¶181-182.)

Spenser II's compressible material is preferably comprised of non-metallic PET fibers. (Ex. 1011, [00145]; Ex. 1003, ¶182.)

7. Claim 8

Spenser and Levi disclose "wherein the cells formed in the frame are gridded." (Ex. 1003, ¶¶183-185.)

Spenser's frame in Figure 44a includes gridded cells:

FIG. 44a

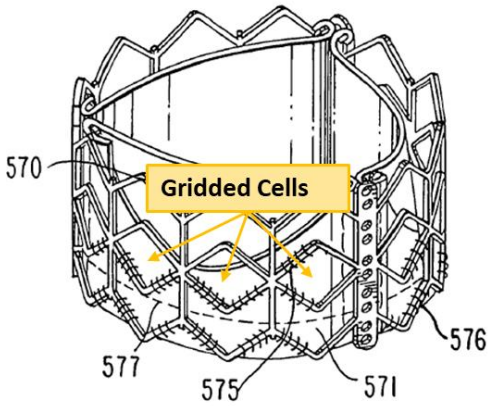

(Ex. 1010, Fig. 44a; Ex. 1003, ¶184.)

Levi's frame includes gridded cells:

FIG. 11

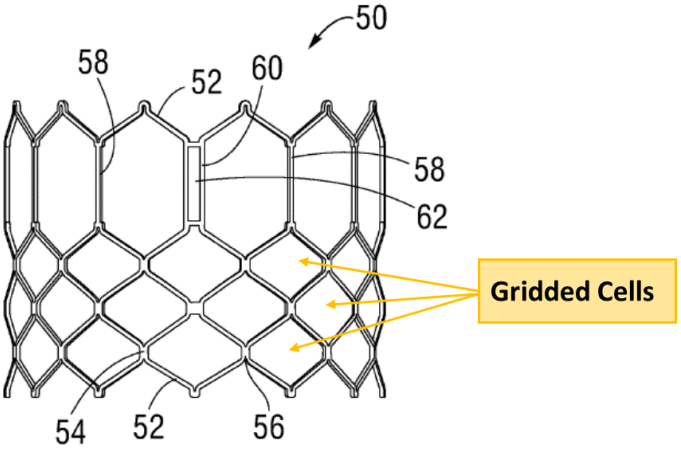

(Ex. 1008, Fig. 11; Ex. 1003, ¶185.)

8. Claim 9

Spenser ***or*** Levi in combination with Spenser II renders obvious "wherein the prosthetic heart valve is free of a non-porous graft covering between the first plurality of fibers and the frame and the second plurality of fibers and the frame." (Ex. 1003, ¶¶186-189.)

POSITA's would have understood Spenser II's compressible material to have preferably been a porous material. (*Supra* §VIII.A.2.) Spenser's Fig. 44a does not include a nonporous graft covering on the frame's exterior:

FIG. 44a

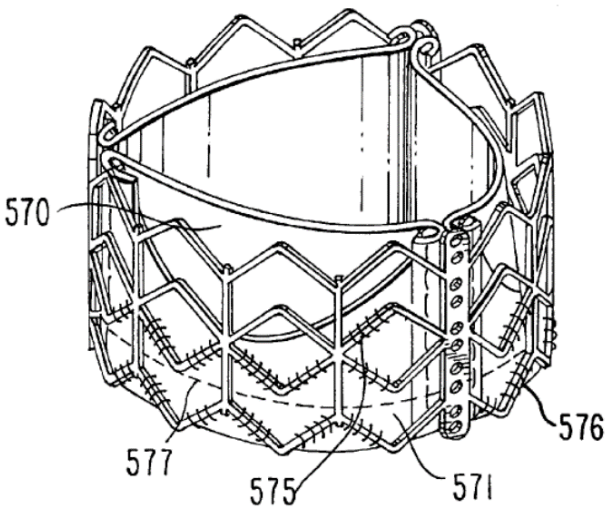

(Ex. 1010, Fig. 44a.) Similarly, Levi does not include a nonporous graft covering on the frame's exterior:

FIG. 20

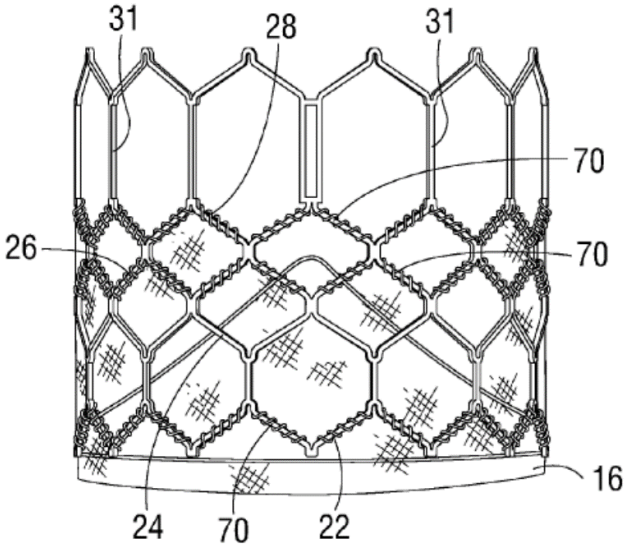

(*Id.*, Fig. 20; Ex. 1003, ¶188.) Therefore, if Spenser II's porous compressible material were added to Spenser's or Levi's frame, a "non-porous graft covering" would not exist between the fibers of the compressible material and the frame. (Ex. 1003, ¶189.)

9. <u>Claim 10</u>

Spenser ***or*** Levi in combination with Spenser II renders obvious "wherein the polymer covering is stitched to the frame." (Ex. 1003, ¶¶190-192.)

Spenser's PET 571 (polymer covering) is stitched to the frame with sutures 576:

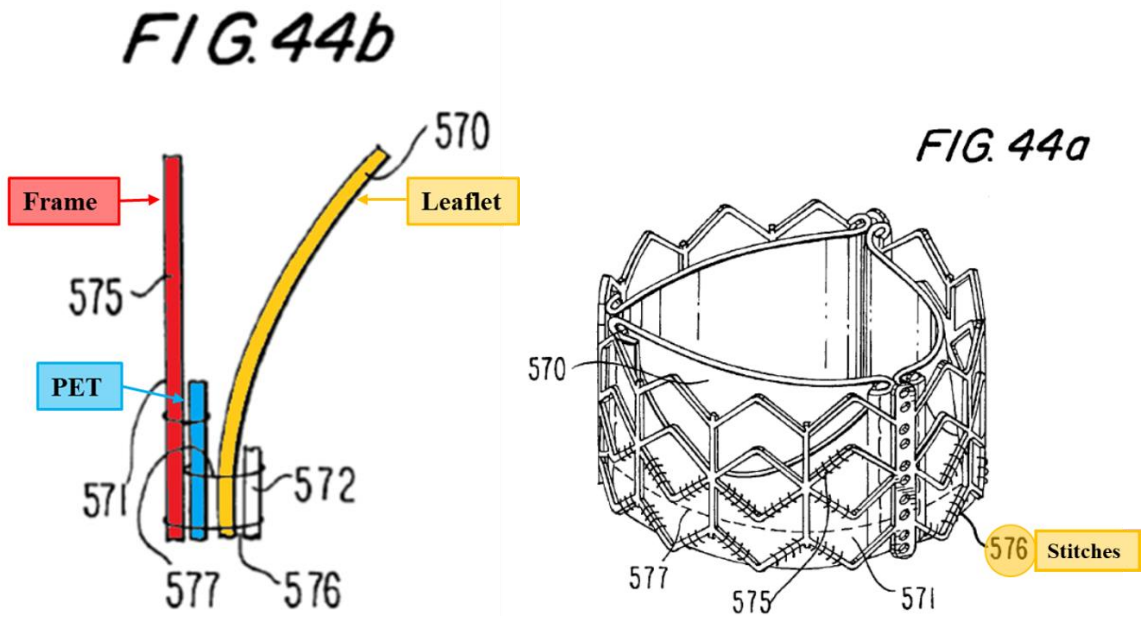

(Ex. 1010, 26:45-47, Figs. 44a-44c.)

Levi's inner skirt 16 (polymer covering) is stitched to the frame with sutures 70:

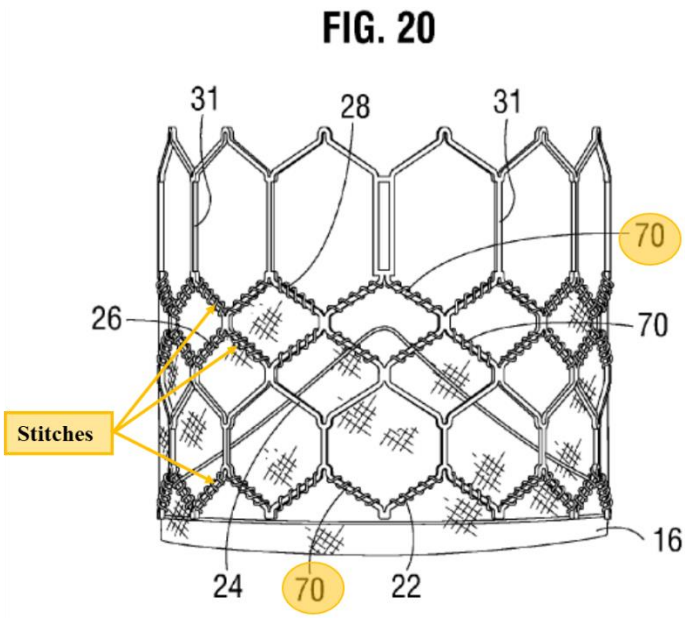

(Ex. 1008, 9:24-25, 10:11-30, Figs. 20, 39.)

10. Claim 11

Spenser ***or*** Levi in combination with Spenser II renders obvious "wherein the frame extends distally further than the leaflet assembly." (Ex. 1003, ¶¶193-196.)

a. Spenser

Spenser discloses this limitation in two ways. (Ex. 1003, ¶¶194-195.) First, Spenser illustrates valves having "heavy metal markers [232] on the stent," which allow visualization of the device during delivery:

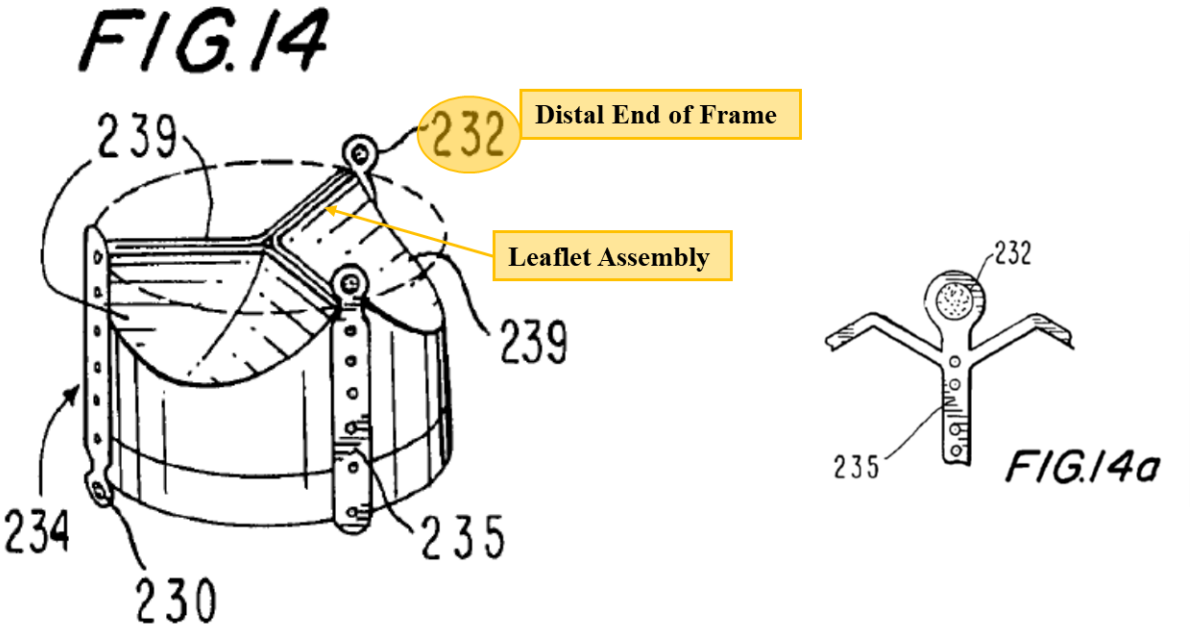

(Ex. 1010, 16:27-51, Figs. 14-14a.) The portion of the frame housing the marker extends distally further than the leaflet assembly. (Ex. 1003, ¶194.) POSITAs would have been motivated to add markers to Figure 44a's stent to better visualize

the stent during deployment. (*Id.*) POSITAs would have reasonably expected success in adding the markers because Spenser describes using the markers with a stent like Figure 44a and markers were common in the field by 2012. (*Id.*)

Second, Spenser illustrates a frame portion 456 that extends distally further than the leaflet assembly for attaching the leaflets to the frame:

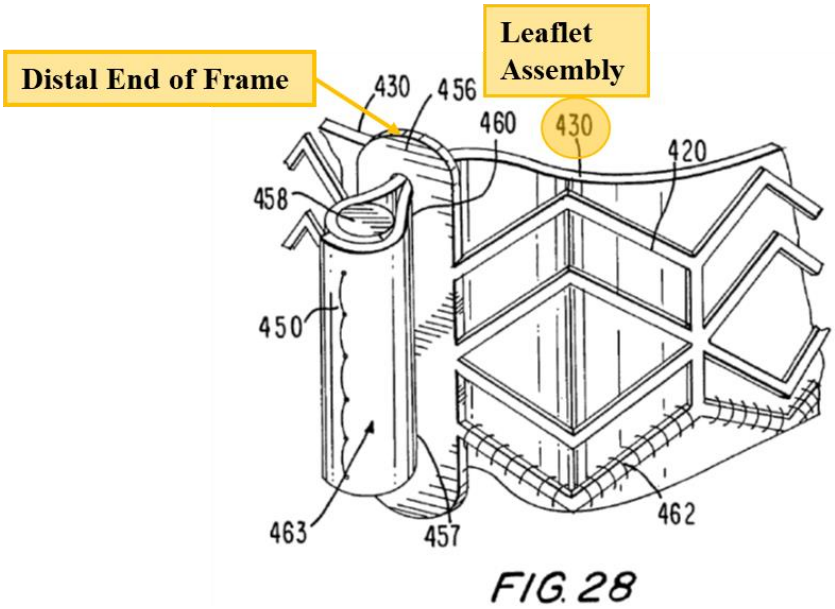

(Ex. 1010, 21:46-67, Fig. 28; Ex. 1003, ¶195.) POSITAs would have been motivated to use this attachment method in Figure 44a to reduce stress points and abrasion on the leaflets. (Ex. 1010, 21:60-67, Ex. 1003, ¶195.) POSITAs would have reasonably expected success in using this method with Figure 44a because Spenser discloses using the method with a valve like Figure 44a, and Levi discloses similar configurations. (Ex. 1003, ¶195.)

b. <u>Levi</u>

"To protect against over-expansion of the leaflet structure 14," Levi discloses that the "leaflet structure desirably is secured to the frame 12 below the upper row of struts 32." (Ex. 1008, 8:11-13.) The frame extends distally further than the leaflet assembly:

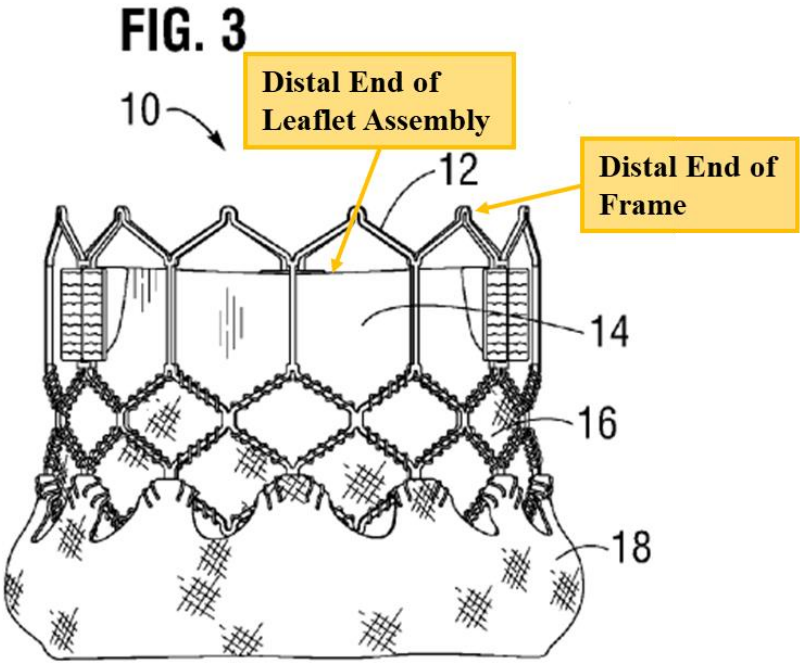

(*Id.*, Fig. 3; Ex. 1003, ¶**.)

11. <u>Claim 12</u>

Spenser ***or*** Levi in combination with Spenser II renders obvious "wherein the polymer covering and the first plurality of fibers and the second plurality of fibers are distinct elements." (Ex. 1003, ¶¶197-200.)

When Spenser II's compressible material is added to Spenser's or Levi's

valve, the compressible material and the inner PET layer/inner skirt would be "distinct elements" at least because the elements would be on opposite sides of the frame and separately attached thereto. (Ex. 1003, ¶198; *see also* Ex. 1130.)

Spenser II's compressible material may include cloths/fabrics having a base layer (second plurality of fibers) and fibers extending outwardly from the base layer (first plurality of fibers). (*Supra* §VIII.A.1.) Because the first plurality of fibers and second plurality of fibers comprise distinguishable portions of the cloth, the first and second pluralities are "distinct elements." (Ex. 1003, ¶199.) PO's arguments during prosecution of PO's related '634 patent confirm this. There, PO argued that Spenser II's compressible material has "two distinct elements: the cloth base material, plus fibers extending from the cloth base material." (Ex. 1125, 13.)

12. <u>Claim 13</u>

Spenser ***or*** Levi in combination with Spenser II renders obvious "wherein the prosthetic heart valve is balloon expandable and expansion of the prosthetic heart valve is configured to press some of the first plurality of fibers against native leaflets of an aorta of the patient." (Ex. 1003, ¶¶201-203.)

Spenser discloses that the valve in Figure 44a "resembles the valve shown in Fig. 43." (Ex. 1010, 26:34-35.) The valve in Figure 43 may be "inflated by a balloon[.]" (*Id.*, 26:19-22.) Therefore, Figure 44a is also balloon expandable. (Ex.

1003, ¶202.)

Levi discloses "the frame 12 (and thus the valve 10) can be crimped to a radially compressed state on a delivery catheter and then expanded inside a patient by an inflatable balloon[.]" (Ex. 1008, 6:17-28.)

Spenser ***or*** Levi in combination with Spenser II discloses a valve "configured to press some of the first plurality of fibers against native leaflets of an aorta of the patient" as explained in claim 1. (*Supra* §VIII.A.1.h.)

13. <u>Claim 14</u>

Spenser ***or*** Levi in combination with Spenser II renders obvious "wherein the polymer covering extends beyond a proximal end of the frame and over the proximal end thereof to cover the proximal end of the frame." (Ex. 1003, ¶¶204-208.)

Spenser discloses this limitation for the reasons explained in claim 3. (*Supra* §VIII.A.3.) The Board has already concluded that Spenser and Spenser II render this limitation obvious in a related IPR. (Ex. 1118, 22-23, 74.)

The proximal edge of Levi's inner skirt extends beyond the proximal end of the frame:

FIG. 20

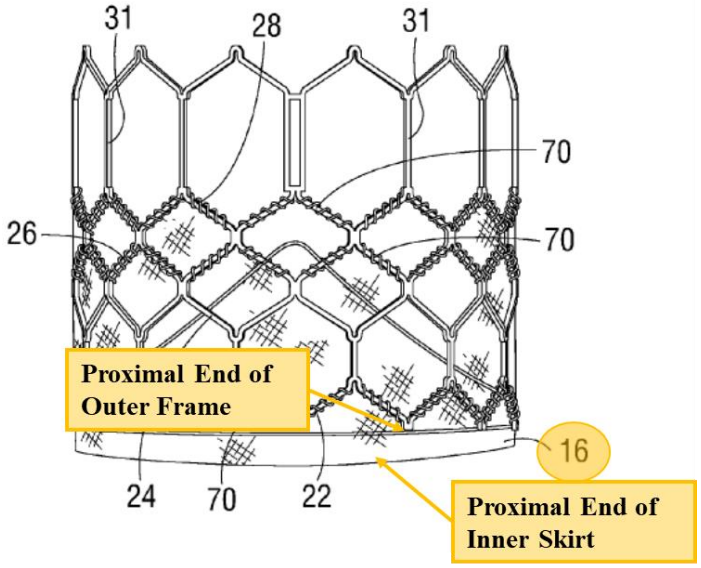

(Ex. 1008, Fig. 20.) Levi further discloses, "the lower edge 160 of the skirt 18 can be sutured to the lower edge of the inner skirt 16 at the inflow end of the valve." (*Id.*, 13:55-58.)

FIG. 42

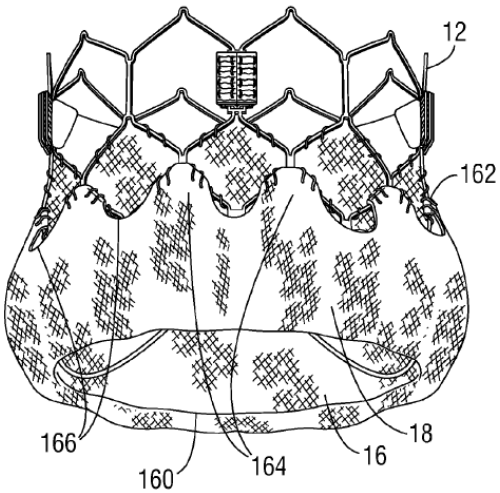

Because the inner skirt extends beyond the proximal end of the outer frame, the attachment of the outer skirt necessarily causes the lower edge of the inner skirt 16 to extend over and cover the proximal end of the outer frame. (Ex. 1003, ¶207.)

Alternatively, POSITAs would have found it obvious to extend Levi's inner skirt over the proximal end of the frame to cover the proximal end. (*Id.*, ¶208.) Levi discloses that the "upper edge portion [distal] of the [inner] skirt is wrapped around the upper surfaces of struts 28 and secured in place with sutures 70." (Ex. 1008, 10:12-26, Fig. 20.) The wrapping "provides for a stronger and more durable attachment of the skirt to the frame." (*Id.*, 10:26-28.) POSITAs would have been motivated to apply this technique to the lower (proximal) edge of the inner skirt to create a stronger attachment between the inner skirt and frame. (Ex. 1003, ¶208.) Because the inner skirt extends beyond the proximal end of the frame, POSITAs would have found it obvious to wrap Levi's inner skirt over the proximal end and secure the inner skirt to the outside of the frame using this wrapping technique. (*Id.*) POSITA's would have expected success in attaching the inner skirt in this way because Levi discloses that it was successful for the skirt's distal end. (*Id.*) In this configuration, the outer skirt could still be stitched to the inner skirt or frame and operate the same way. (*Id.*)

14. Claim 15

Spenser ***or*** Levi in combination with Spenser II renders obvious "wherein the first plurality of fibers defines a spacing that extends through a thickness thereof that is created by a distance between adjacent fibers thereof." (Ex. 1003, ¶¶209-212.)

POSITAs would have understood Spenser II's compressible material to preferably be a porous material with spacings between its fibers. (*Supra* §VIII.A.2.) These spacings would "extend[] through a thickness" of the outward-facing fibers. (*Id.*; Ex. 1003, ¶211)

Additionally, PO cannot argue the selection of materials and adaptation of the compressible material to provide such spacings would have been beyond the skill of POSITAs because, as explained in claim 2, the '834 patent does not disclose how to size or arrange the fibers to provide such a spacing. (*Supra* §VIII.A.2.)

15. Claim 16

Spenser ***or*** Levi in combination with Spenser II renders obvious "wherein the frame is radially expandable from the radially compressed orientation to the radially expanded orientation along a length of the frame extending from a proximal end thereof to a distal end thereof." (Ex. 1003, ¶¶213-215.)

Spenser's Figures 3-4 illustrate the valve in the compressed and expanded orientations along the length of the frame:

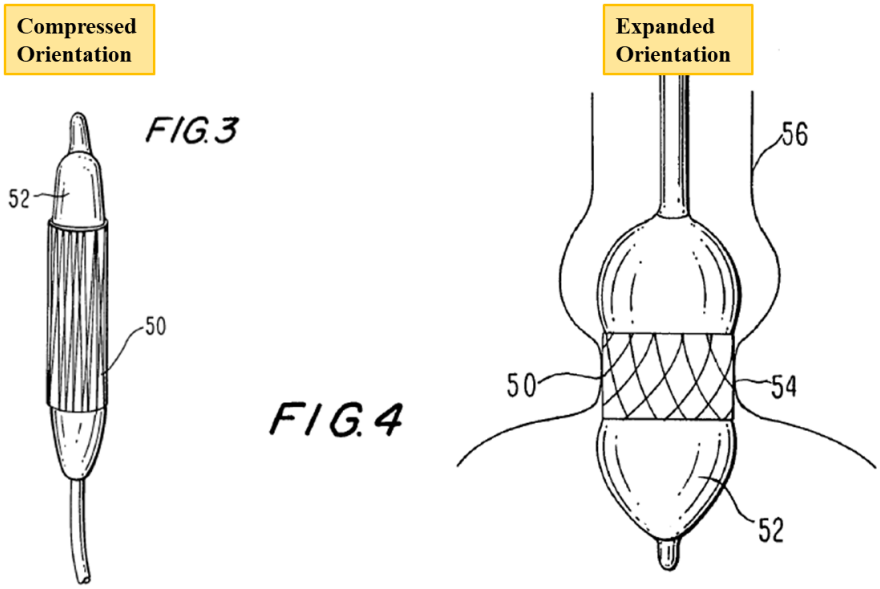

(Ex. 1010, Figs. 3-4.)

Similarly, Levi's valve is "radially collapsible and expandable" along the length of the valve. (Ex. 1008, Abstract.) Levi's Figure 18 shows the compressed valve, while Figure 42 shows the expanded valve:

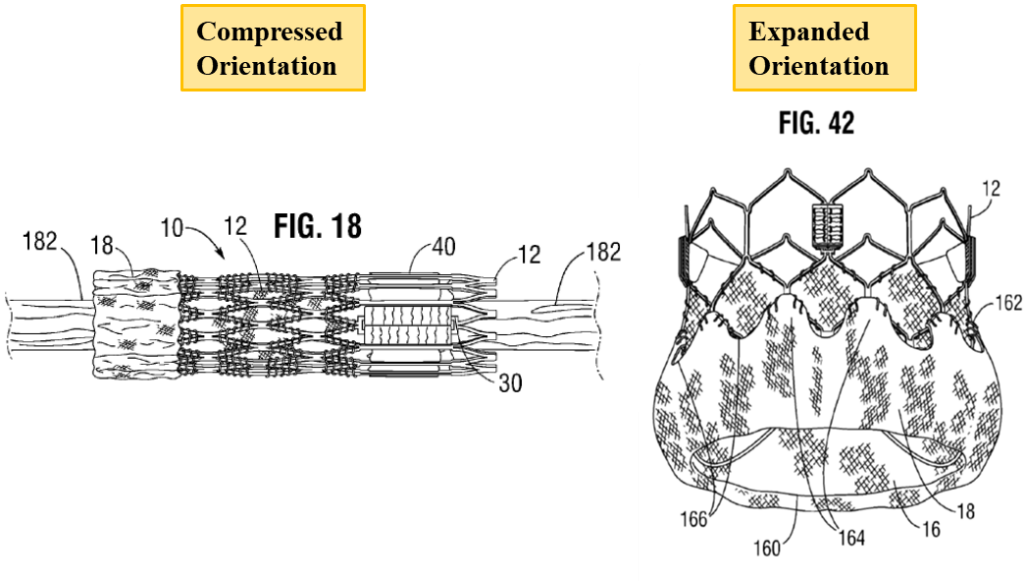

(*Id.*, Figs. 18, 42.)

16. Claim 17

Claim 17 is an independent claim that repeats the limitations of claim 1 with three exceptions discussed below. Spenser ***or*** Levi in combination with Spenser II render the limitations of claim 1 and the additional limitations of claim 17 obvious. (*Supra* §VIII.A.1.)

a. Polymer Covering

Spenser discloses "a polymer covering carrying the leaflet assembly and positioned radially inwardly of the frame and radially outwardly of the leaflet assembly."

Spenser's PET 571 [blue] is positioned "between the leaflets [yellow] and frame [red]" and is attached to the leaflets via suture 577:

FIG. 44b

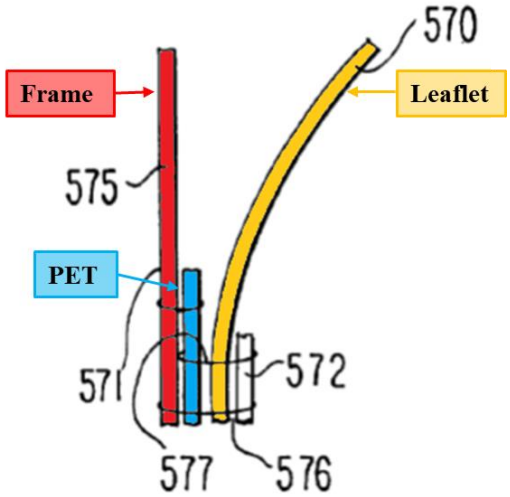

(Ex. 1010, 26:30-54, Fig. 44b.) PET 571 therefore "carr[ies]" the leaflet assembly. (Ex. 1003, ¶222.)

Levi's inner skirt is also between the frame and leaflet assembly and attached to the leaflet assembly "via one or more thin PET reinforcing strips." Therefore, the skirt is a "polymer covering carrying the leaflet assembly." (Ex. 1008, 9:25-29; Ex. 1003, ¶¶114, 223.)

b. <u>Spacing</u>

Spenser ***or*** Levi in combination with Spenser II renders obvious "wherein the prosthetic heart valve defines a spacing extending through a thickness of the first plurality of fibers that is created by a distance between adjacent fibers thereof, through a thickness of the second plurality of fibers created by a distance between adjacent fibers thereof, and through the plurality of cells of the frame." (Ex. 1003, ¶¶228-231.)

Spenser II's compressible material defines spacings extending through a thickness of the first and second plurality of fibers and that extend to the frame as explained in claims 2 and 15. (*Supra* §VIII.A.2,14.) Because Spenser's and Levi's frames include a plurality of open cells, the spacings that extend to the frame will also extend through the open cells of the frame. (Ex. 1003, ¶230.) Because the first and second plurality of fibers radially overlap, the spacings between the adjacent

fibers also radially overlap. (*Id.*) Therefore, POSITAs would have understood at least some of the overlapping spacings would extend through a thickness of the first plurality, second plurality, and open cells of the frame. (*Id.*) Based on PO's infringement contentions, such a configuration meets the limitations of claim 17. (*See* Ex. 1123, 180-183.)

If Spenser II does not disclose this limitation, POSITAs would have found it obvious to select materials having larger and more frequent spacings that would extend through a thickness of the first and second plurality of fibers and the open cells of the frame. (Ex. 1003, ¶231.) POSITAs would have had access to a range of suitable materials having varying thicknesses and densities and could have selected a material with a lower density of radially extending fibers such that larger and more frequent spacings existed between the fibers. (*Id.*; *see also e.g.*, Ex. 1074.) POSITAs would have been motivated to select these low-density materials to reduce the crimped profile of the device while still reducing PVL. (Ex. 1003, ¶231.)

Moreover, as explained in claims 2 and 15, the '834 patent does not contain any disclosure regarding how to size or arrange the fibers to provide such spacings. (*Supra* §VIII.A.2,14.) Consequently, PO cannot argue that the adaption of Spenser II's compressible material to provide such spacings would have been beyond the skill of POSITAs. (*Id.*) Further, the '834 patent does not disclose any sizes for the

alleged "spacings" and, therefore, even very small spacings satisfy the claim. (*See, e.g.*, Ex. 1123, 181 (relying on 20x magnification of SAPIEN 3 Ultra's skirt to show "spacings").)

c. <u>Seal About Spacing</u>

Spenser ***or*** Levi in combination with Spenser II renders obvious "wherein, compression of the first plurality of fibers and the second plurality of fibers in response to expansion of the prosthetic heart valve compresses the first plurality of fibers relative to the spacing to create a seal thereabout." (Ex. 1003, ¶¶232-233.)

Spenser II discloses that compression of the compressible material against the patient's native tissue "creates a mechanical seal that prevents paravalvular leakage." (Ex. 1011, [00145].) POSITAs would have understood the compressible material "creates a mechanical seal" by compressing the fibers of the material relative to one another, including the fibers extending from the outward-facing surface (first plurality). (Ex. 1003, ¶233.) Accordingly, POSITAs would have understood the first plurality of fibers would be compressed relative to the spacings between the adjacent fibers, creating a seal thereabout. (*Id.*)

17. <u>Claim 18</u>

Claim 18 is an independent claim that largely repeats the limitations of claim 17 and additionally recites the limitations of claims 5 and 15. Unlike claim 17, claim

18 merely recites a "plurality of fibers," not a first and second plurality. Spenser ***or*** Levi in combination with Spenser II renders claim 18 obvious for the reasons explained in claims 5, 15, and 17 above. (*Supra* §§VIII.A.5,14,16.)

B. <u>Grounds 3-4: Claims 1-6, 8-18 Obvious Over Spenser or Levi in Combination with Chuter</u>

Spenser (left) and Levi (right) describe heart valves having a frame, inner polymeric covering, and leaflet assembly:

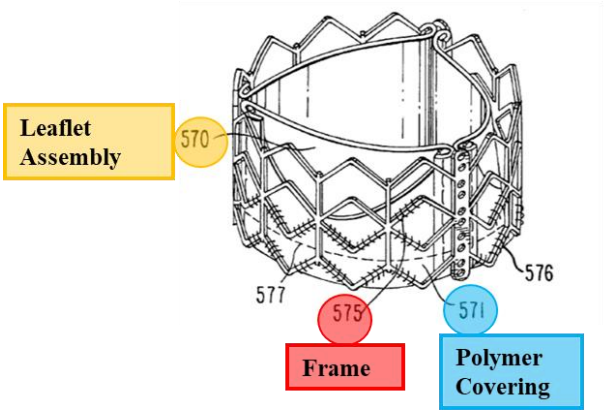

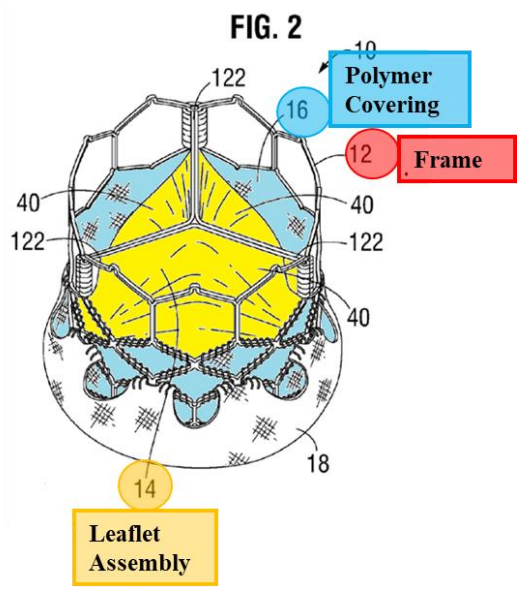

(Ex. 1010, 11:66-12:17, Fig. 44a; Ex. 1008, Fig. 2.) Levi also discloses a fabric skirt secured to the frame's exterior surface for preventing PVL. (Ex. 1008, 13:50-66, 17:12-18, Figs. 3, 59.)

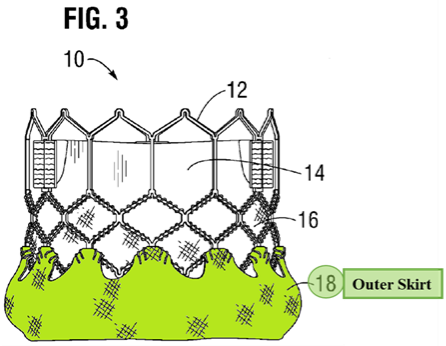

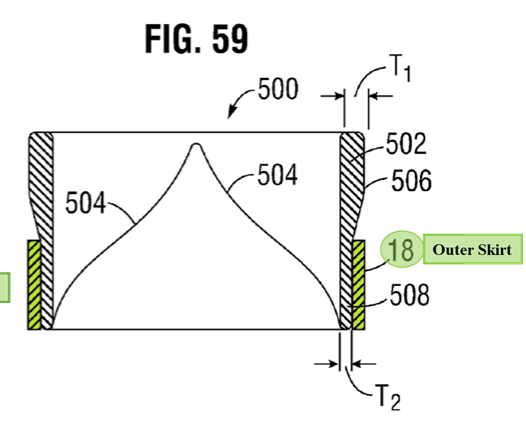

Chuter describes various embodiments of endovascularly deliverable "intervascular stents for maintaining vascular patency" or occluding diseased vessels. (*See* Ex. 1116, Abstract, [001].) Chuter's stents include a "fiber pile" composed of outwardly extending individual fibers that are "adapted to form a foundation for tissue growth between the fiber pile and the lumenal wall of a vascular vessel."

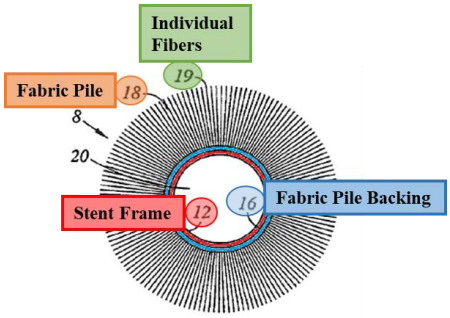

Fig. 2

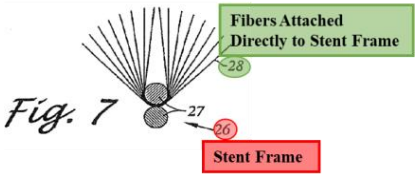

Fig. 7

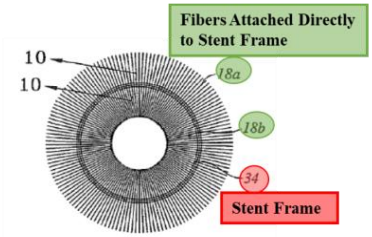

Fig. 9

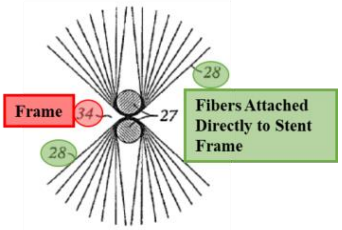

Fig. 10

(*Id.*, [0017]-[0022], Figs 1-10.) The individual fibers can extend from a "fabric pile backing" layer (Fig. 2) or extend directly from the frame without any backing layer (Figs. 7, 9-10). (*Id.*, [0054]-[0057], Figs. 1-10.) Chuter also discloses embodiments having individual fibers extending outwardly and inwardly from the frame (Figs. 9-10). (*Id.*, [0057], Figs. 8-10.)

As discussed below, POSITAs would have found it obvious to add Chuter's "fiber pile" to Spenser's valves or replace Levi's outer skirt with Chuter's "fiber pile." (Ex. 1003, ¶¶258-264.) POSITAs would have been motivated to do so given the well-known problem of PVL and Chuter's teachings that the fiber pile encourages tissue ingrowth and prevents blood from leaking between the frame and

the patient's native tissue. (*Id.*) Accordingly, Spenser ***or*** Levi in combination with Chuter renders the challenged claims obvious.

1. <u>Claim 1</u>

Spenser ***or*** Levi in combination with Chuter renders claim 1 obvious. (Ex. 1003, ¶¶250-276.)

a. <u>Preamble</u>

If the preamble is limiting, Spenser and Levi disclose this limitation as explained in Grounds 1-2. (*Supra* §VIII.A.1.a.)

b. <u>Frame</u>

Spenser and Levi disclose this limitation as explained in Grounds 1-2. (*Supra* §VIII.A.1.b.)

c. <u>Radially Expandable</u>

Spenser and Levi disclose this limitation as explained in Grounds 1-2. (*Supra* §VIII.A.1.c.)

d. <u>Leaflet Assembly</u>

Spenser and Levi disclose this limitation as explained in Grounds 1-2. (*Supra* §VIII.A.1.d.)

e. <u>Polymer Covering</u>

Spenser and Levi disclose this limitation as explained in Grounds 1-2. (*Supra* §VIII.A.1.e.)

f. <u>First Plurality of Fibers</u>

Spenser ***or*** Levi in combination with Chuter renders obvious "a first plurality of fibers that extend away from the frame." (Ex. 1003, ¶¶256-264.)

Chuter's "fiber pile" includes individual fibers (first plurality) that extend away from the frame and "form a foundation for tissue growth between the fiber pile and the lumenal wall of a vascular vessel":

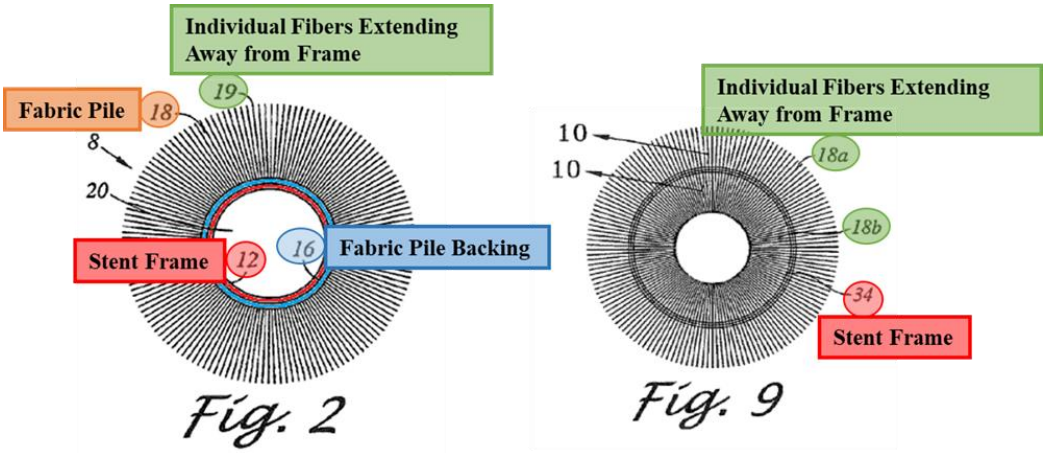

(Ex. 1116, [0017]-[0022], [0054]-[0057], Figs 1-10.)

i. <u>Spenser and Chuter</u>

POSITAs would have been motivated to add Chuter's fiber pile to Spenser's valve to prevent PVL. (Ex. 1003, ¶258.) Chuter's fiber pile forms "a foundation for

tissue growth between the lumenal wall and the endovascular prosthesis to incorporate the endovascular prosthesis with the vascular vessel" and also "fill[s] the gaps between the outer wall of the expandable graft and the inner wall of the vascular vessel." (Ex. 1116, [0012]-[0013], [0017]-[0020], [0064].) POSITAs would have recognized that Spenser's THVs would benefit from Chuter's fiber pile. (Ex. 1003, ¶258.) In fact, Spenser II expressly discloses that Spenser's valve could benefit from improved PVL protection, which was a well-known issue, and suggests supplementing Spenser with a sealing material. (*Id.*; *see also* Ex. 1011, [0009]-[0010].) Further, adding Chuter's fiber pile to Spenser's valves would merely entail applying Chuter's known technique for reducing PVL (adding a fabric pile) to Spenser's known valves, which were ready for improvement and, as discussed below, would yield predictable results. *KSR*, 550 U.S.at 416; (Ex. 1003, ¶258.)

POSITAs would have reasonably expected success in adding Chuter's fiber pile to Spenser's valve. Chuter discloses that "[v]irtually any expanding stent" can be adapted to include the described "fiber pile on its external surface about the tubular side wall of the stent." (Ex. 1116, [0012].) Chuter specifically identifies a variety of self-expanding and balloon-expandable frames that can be combined with the fiber pile. (Ex. 1116, [0003].) Indeed, Chuter discloses combining the fiber pile with the same balloon-expandable frames incorporated into the '834 patent.

(*Compare* Ex. 1001, 7:46:53 (incorporating U.S. Pat. No. 5,102,417) *with* Ex. 1116, [0003] (incorporating the parent of the '417 patent); *see also* Ex. 1126-1127). Thus, while the preferred embodiment in Chuter includes a double-wire frame, Chuter's invention is not limited to such frames and encompasses many frames. (Ex. 1003, ¶¶259-261.)

Additionally, the '834 patent never discloses how to attach the collagen fibers, or any other fibers, to the valve frame. (*See* Ex. 1001, 12:53-56.) Rather, the '834 patent presumes POSITAs possessed the know-how to attach fibers to THV frames. Indeed, PO's expert admitted that the '834 patent specification does not provide "an explicit description of how [the fibers] are attached or secured other than stating that they are attached and secured, and the assumption is that that would be by known biomedical engineering methods." (Ex. 1073, 313:18-314:1.) Therefore, PO cannot dispute that POSITAs would have possessed the knowledge to attach Chuter's fiber pile to Spenser's frame.

ii. <u>Levi and Chuter</u>

POSITAs would have been motivated to replace Levi's outer skirt with Chuter's fiber pile, and reasonably expected success in doing so, for the reasons explained in Grounds 1-2 for Spenser II and for the reasons discussed immediately above. (*Supra* §§VIII.A.1.f.ii, VIII.B.1.f.i.) POSITAs would have also been

motived to add Chuter's fiber pile to Levi based on Chuter's disclosure that the fiber pile promotes tissue ingrowth, which can contribute to a further reduction in PVL. (Ex. 1116 [Chuter], [0012]-[0013], [0017]-[0020], [0064]; Ex. 1003, ¶263.)

g. <u>Endovascularly Deployed</u>

Spenser and Levi disclose this limitation as explained in Grounds 1-2. (*Supra* §VIII.A.1.g.) POSITAs would have reasonably expected that Spenser's and Levi's valves would remain suitable for endovascular delivery through the femoral artery after adding Chuter's fiber pile. (Ex. 1003, ¶¶266-269.)

Chuter's stents are "delivered through catheters" inserted into the patient through "a distal branch of the arterial system" that "will normally be one of the arteries in the legs or in the arms." (Ex. 1116, [0062].) POSITAs would have understood this disclosure to include the femoral artery. (Ex. 1003, ¶267.) Chuter further teaches that the stents are compressed when placed in the catheter and the "compression compresses the stent and pushes down the fabric pile" to allow for endovascular delivery. (Ex. 1116, [0062].) Given these teachings, POSITAs would have reasonably expected Chuter's fabric pile to similarly compress when added to Spenser's or Levi's valve, allowing for continued endovascular delivery of the valve through the femoral artery. (Ex. 1003, ¶267.) Additionally, POSITAs would have

understood that the lengths and densities of the fabric pile could be optimized for delivery through the femoral artery. (*Id.*)

h. <u>First Plurality Pressed Against Native Leaflets</u>

Levi and Spenser disclose this limitation as explained in Grounds 1-2. (*Supra* §VIII.A.1.h.) Chuter's outwardly extending fibers would press against the patient's native leaflets when added to Spenser's or Levi's valve for the same reasons discussed in Grounds 1-2 for Spenser II. (*Id.*) POSITAs would have been motivated to position Chuter's fiber pile on Spenser's or Levi's valve such that the fibers could fill the gaps between the valve and the diseased leaflets to prevent PVL. (*See* Ex. 1116, [0064]; Ex. 1003, ¶271.)

i. <u>Second Plurality of Fibers</u>

Chuter discloses this limitation in two ways. First, Chuter descrobes embodiments having a "fabric pile backing" layer that includes "a fabric pile 18 made up of individually extending fibers 19" that "[e]xtend[s] circumferentially outwardly from the backing."

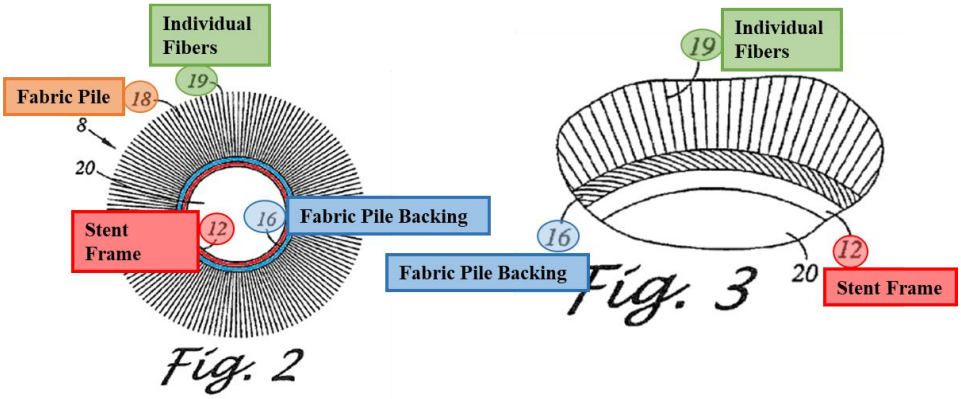

(Ex. 1116, [0054]-[0055], Figs. 2-3.) The "fabric pile backing" layer is composed of fibers, as illustrated in Chuter's Figure 3. (*Id.*, Fig. 3; Ex. 1003, ¶273.) Such a configuration was known in the art, as taught by Norris.

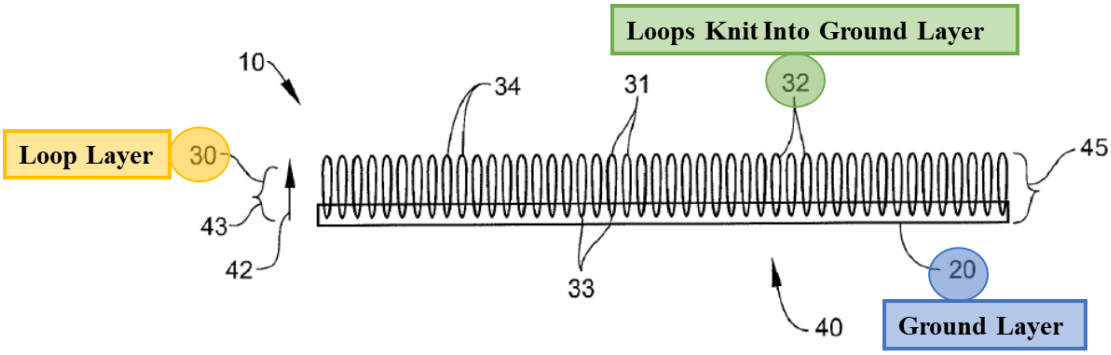

Fig. 1

(Ex. 1074, 4:22-26, Fig. 1 (disclosing a compressible fabric for stents and heart valves comprising a ground layer of knitted fibers with loops of fibers extending therefrom).)

The fibers of Chuter's fabric pile backing layer are positioned radially inwardly of the individual fibers and constitute the claimed "second plurality of fibers." (Ex. 1116, Figs. 2-3; Ex. 1003, ¶273.) As illustrated in Figures 2-3 above,

the fibers of the fabric pile backing layer are in direct contact with the frame. (Ex. 1116, Figs. 2-3; Ex. 1003, ¶273.) POSITAs would have been motivated to add the fiber pile to Spenser's and Levi's valves because the use of similar materials for sealing cardiovascular devices, including THVs, was done successfully in the art. (Ex. 1003, ¶273; Ex. 1011, [00145]; Ex. 1074, 4:22-26, 9:18-21.)

Second, Chuter discloses embodiments without the "backing layer" where individual fibers extend inwardly from the frame:

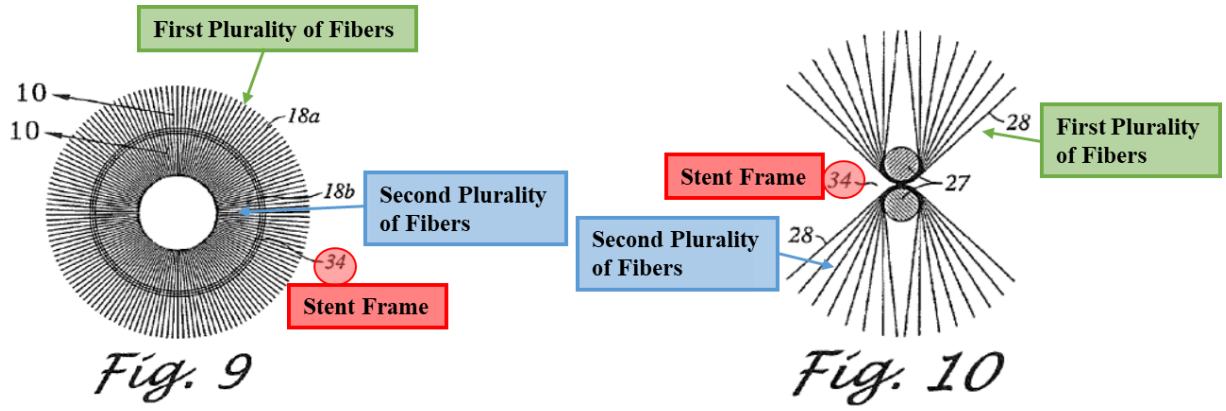

(Ex. 1116, [0056]-[0057], Figs. 5-10.) Figures 9-10 illustrate embodiments having fibers extending outwardly (first plurality) and inwardly (second plurality) from the frame. (*Id.*, [0057], Figs. 9-10.) The inwardly-extending fibers are radially inward of the outwardly-extending fibers and constitute the claimed "second plurality of fibers." (*Id.*; Ex. 1003, ¶274.) The inwardly-extending fibers are in direct contact with the frame. (Ex. 1116, [0057], Figs. 9-10; Ex. 1003, ¶274.) POSITAs would have been motivated to add similar, bi-directional fiber piles to Spenser's and Levi's

valves to ensure tissue ingrowth, blood coagulation, and formation of a seal between (1) the THV frame and native tissue, and (2) the THV frame and inner polymer covering. (Ex. 1003, ¶274.) POSITAs would have possessed the skills to optimize the length of the outwardly and inwardly extending fibers to ensure delivery through the femoral artery and optimal sealing. (*Id.*)

Notably, the only disclosure in the '834 patent that may support the claimed "second plurality of fibers" are the collagen fibers extending inwardly from the outer frame. (*See* Ex. 1001, 12:56-58, Fig. 13.) Because Chuter discloses the same arrangement of fibers, PO cannot argue a "second portion of fibers" is novel:

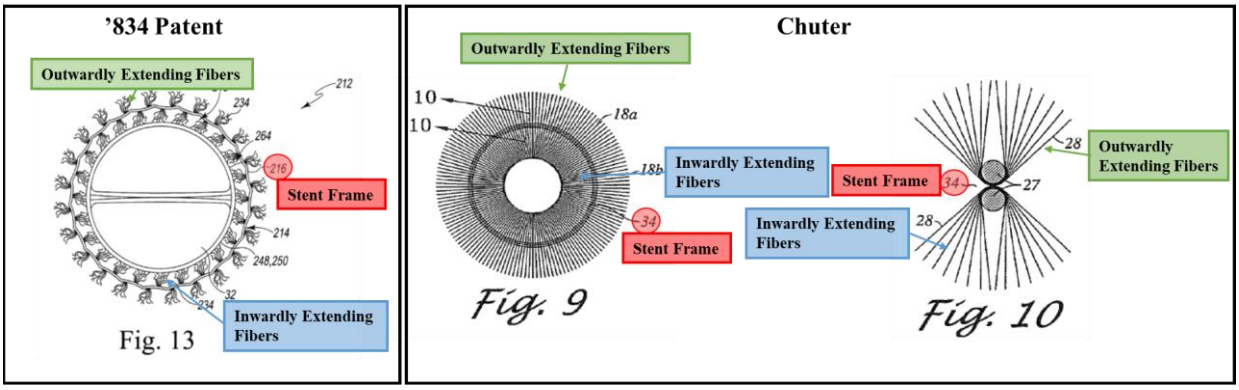

(*Compare id.*, Fig. 12 (left) *with* Ex. 1116, Figs. 9-10 (right).)

2. <u>Claim 2</u>

Chuter discloses the limitations of claim 2 in two ways. First, POSITAs would have understood that, in the embodiments including the fabric pile backing layer, the layer would preferably be porous to maximize the compressibility of the

fiber pile. (Ex. 1003, ¶278.) Such materials were well known in the prior art. (*Id.*) For example, Norris discloses a compressible, resilient fabric for providing sealing on medical devices, including prosthetic heart valves:

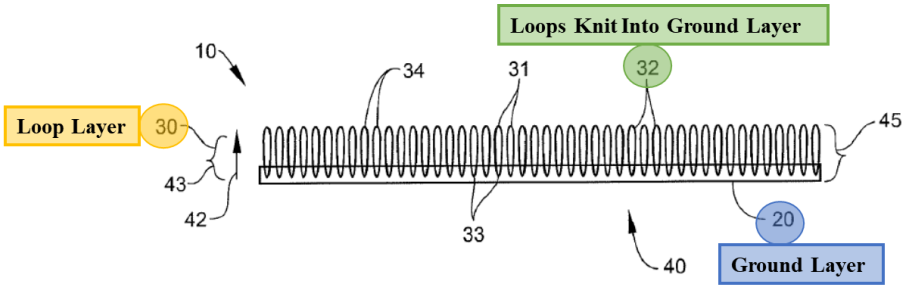

Fig. 1

(Ex. 1074, 4:22-26, Fig. 1.) Norris explains, "the ground layer 20 can have a porosity that can provide some space into which the loops 32 can be compressed." (*Id.*, 12:45-48.) POSITAs would have known of Norris and understood that Chuter's backing layer could have spaces creating a similar porosity. (Ex. 1003, ¶278) Because Chuter's fabric pile backing layer directly abuts the stent frame, at least some of the spacings between the fibers in the backing layer would extend to the frame. (*Id.*)

Second, in Chuter's embodiments that do not include a fabric pile backing layer, Chuter illustrates spacings between the adjacent inwardly-extending fibers (second plurality) that extend to the frame:

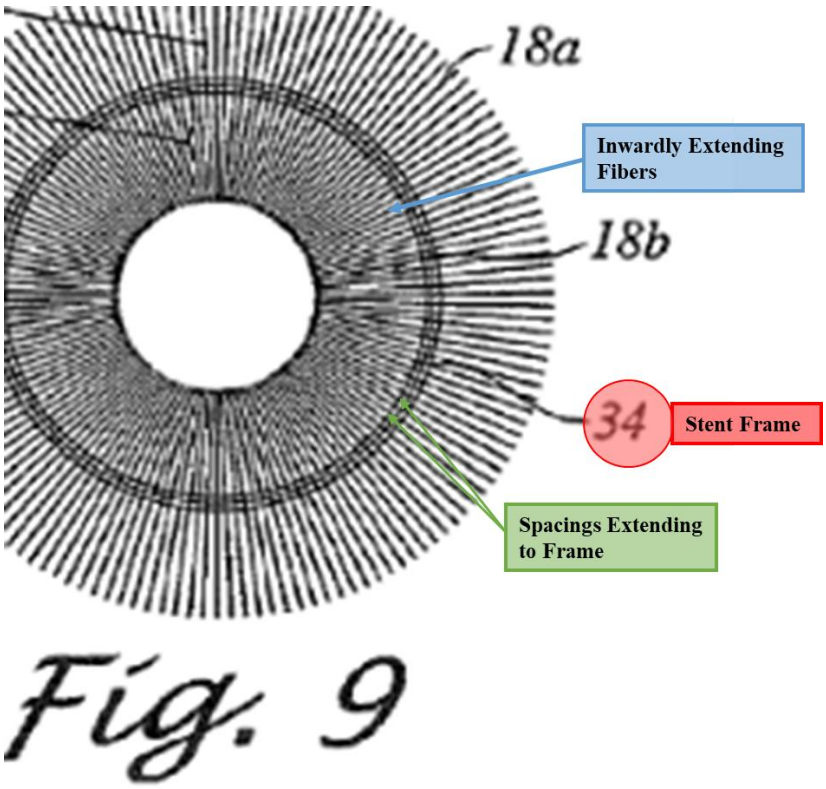

(Ex. 1116, [0057], Fig. 9; Ex. 1003, ¶279.)

3. <u>Claim 3</u>

Levi and Spenser disclose the limitations of claim 3 as explained in Grounds 1-2. (*Supra* §VIII.A.3.)

4. <u>Claim 4</u>

Spenser ***or*** Levi in combination with Chuter renders claim 4 obvious. (Ex. 1003, ¶¶282-285.)

Chuter's Figures 6-7 disclose fibers extending to different lengths from a longitudinal centerline through the frame:

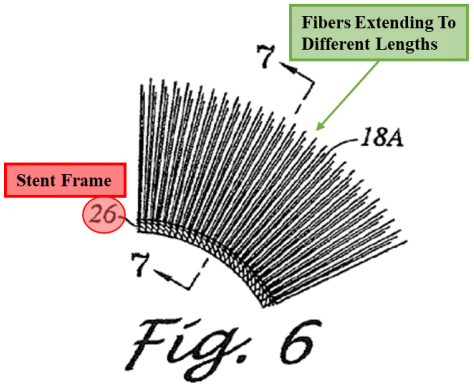

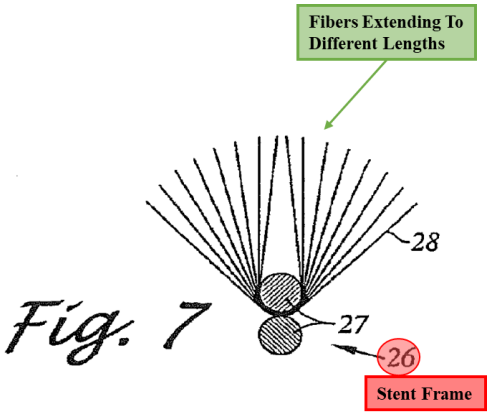

(Ex. 1116, Figs. 6-7; Ex. 1003, ¶283.)

Additionally, Chuter's fiber pile "press[es] against the inner luminal wall of the arterial system to form a seal" upon implantation. (Ex. 1116, [0059].) Diseased aortic valves have highly calcified and irregularly shaped surfaces. (Ex. 1003, ¶284.) Consequently, when Chuter's fibers press against the irregular native valve, the fibers will extend to varying distances from a centerline extending longitudinally through the frame along a length of the centerline. (*Id.*)

5. <u>Claim 5</u>

Spenser and Levi include two rows of cells at the inflow end of the frame as explained in Grounds 1-2. (*Supra* §VIII.A.5.) POSITA's would have found it obvious to position Chuter's fiber pile over at least the proximal two rows of cells on Spenser's and Levi's valves. (Ex. 1003, ¶288.) POSITAs would have been motivated to do so because there are a finite number of places to position the material and to ensure the fiber pile would overlap with, and press against, the patient's

diseased native leaflets to form a seal and fill gaps between the native leaflets and the valve. (*Id.*) Additionally, Levi discloses a sealing material extending over the proximal two rows of cells, providing POSITAs with further motivation to select such an arrangement. (*Id.*)

6. <u>Claim 6</u>

Chuter discloses non-metallic fibers: "[t]he fibers of the fiber pile are biocompatible fibers which are known to the art. Suitable fibers include nylon fibers, polyester fibers, Mylar brand fibers and the like." (Ex. 1116, [0022]; Ex. 1003, ¶291.)

7. <u>Claim 8</u>

Levi and Spenser disclose the limitations of claim 8 as explained in Grounds 1-2. (*Supra* §VIII.A.7.)

8. <u>Claim 9</u>

As explained in Grounds 1-2, Spenser's and Levi's valves lack a nonporous graft covering on the outside of the valves. (*Supra* §VIII.A.8.) POSITAs would have understood there would not be a nonporous graft covering between Chuter's fiber pile and Spenser's or Levi's frames for at least two reasons. (Ex. 1003, ¶¶294-296.)

First, in Chuter's embodiments including the fabric pile backing layer, POSITAs would have understood the backing layer to preferably be a porous material to maximize compressibility, blood coagulation, and tissue ingrowth. (*Supra* §VIII.B.2.) Accordingly, such embodiments would have been free of any nonporous graft covering between the fibers and frame when added to Spenser's or Levi's valves. (Ex. 1003, ¶295.)

Second, in Chuter's embodiments that do not include the backing layer, the fibers are attached directly to the frame and, therefore, there would be no nonporous graft covering between the fibers and frame when the fibers are added to Spenser's and Levi's valves. (Ex. 1116, [0056]-[0057], Figs. 5-10.)

9. <u>Claim 10</u>

Levi and Spenser disclose the limitations of claim 10 as explained in Grounds 1-2. (*Supra* §VIII.A.9.)

10. <u>Claim 11</u>

Levi and Spenser disclose the limitations of claim 11 as explained in Grounds 1-2. (*Supra* §VIII.A.10.)

11. <u>Claim 12</u>

Spenser ***or*** Levi in combination with Chuter renders claim 12 obvious. (Ex. 1003, ¶¶299-302.)

When added to the outside of Spenser's or Levi's valve, Chuter's fiber pile and the inner skirt would be "distinct elements" at least because the elements would be on opposite sides of the frame and separately attached thereto. (Ex. 1003, ¶300.)

In Chuter's embodiments where the fiber pile includes a backing layer, POSITAs would have understood that the individual outwardly extending fibers (first plurality) would be a distinct element from the fibers making up the backing layer (second plurality). (Ex. 1003, ¶301.) This is evidenced by the distinct arrangement of the fibers of the backing layer and the individually extending fibers depicted and described in Chuter, and the fact that Chuter separately describes and identifies the backing layer and the extending fibers as distinct elements. (*See* Ex. 1116, [0054]-[0055], Figs. 1-4; Ex. 1003, ¶301.)

In Chuter's embodiments without a backing layer, the fibers extending outwardly from the frame (first plurality) and the fibers extending inwardly from the frame (second plurality) are distinct elements at least because they are positioned on opposite sides of the frame and illustrated as separate fibers. (*See* Ex. 1116, [0056]-[0057], Figs. 5-10; Ex. 1003, ¶302.)

12. <u>Claim 13</u>

Levi and Spenser disclose the limitations of claim 13 as explained in Grounds 1-2. (*Supra* §VIII.A.12.) Spenser ***or*** Levi in combination with Chuter discloses a

valve "configured to press some of the first plurality of fibers against native leaflets of an aorta of the patient" as explained in claim 1. (*Supra* §VIII.B.1.h.)

13. Claim 14

Levi and Spenser disclose the limitations of claim 14 as explained in Grounds 1-2. (*Supra* §VIII.A.13.)

14. Claim 15

Chuter illustrates spacings between the individual outwardly-extending fibers (first plurality) that extend through a thickness thereof:

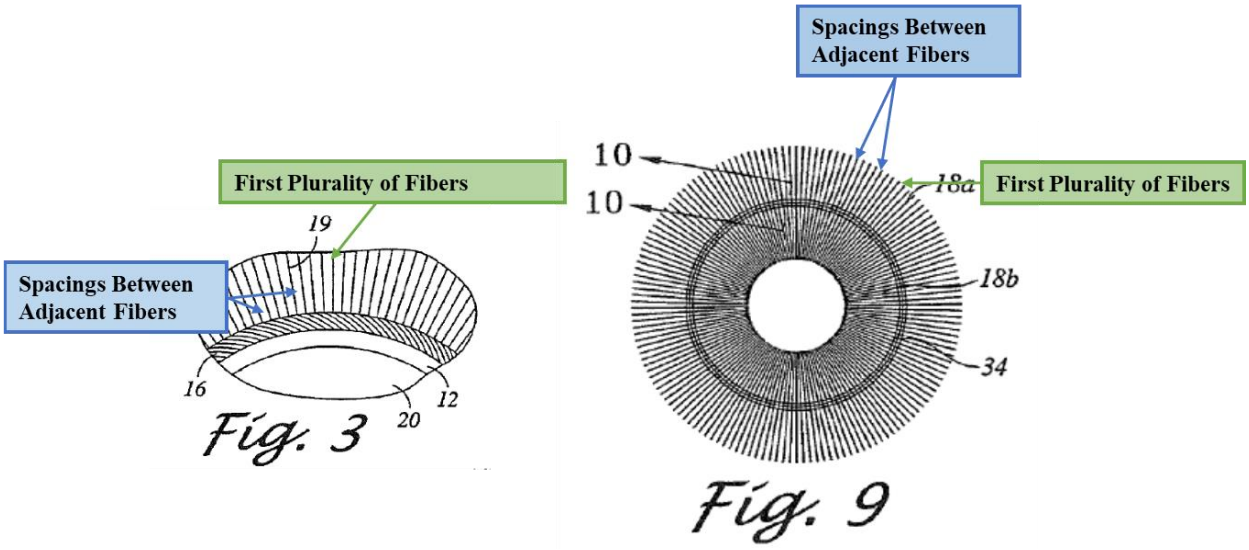

(Ex. 1116, Figs. 3, 9; *see also id.*, Figs. 2, 4-8, 10; Ex. 1003, ¶306.)

15. Claim 16

Spenser and Levi disclose the limitations of claim 16 as explained in Grounds 1-2. (*Supra* §VIII.A.15.)

16. Claim 17

Spenser ***or*** Levi in combination with Chuter renders the limitations of claim 1 and the additional limitations of claim 17 obvious. (Ex. 1003, ¶¶308-322; *supra* §VIII.B.1.)

a. Polymer Covering

Spenser and Levi disclose this limitation as explained in Grounds 1-2. (*Supra* §VIII.A.16.a.)

b. Spacing

Chuter's fiber pile has spacings between adjacent fibers in the first and second plurality of fibers for the reasons explained in claims 2 and 15. (*Supra* §§VIII.B.2,5.) Because Spenser's and Levi's frames have a plurality of open cells, the spacings that extend to the frame also extend through the open cells of the frame. (Ex. 1003, ¶320.) Because Chuter's first plurality and second plurality of fibers radially overlap, the spacings between the adjacent fibers also radially overlap.

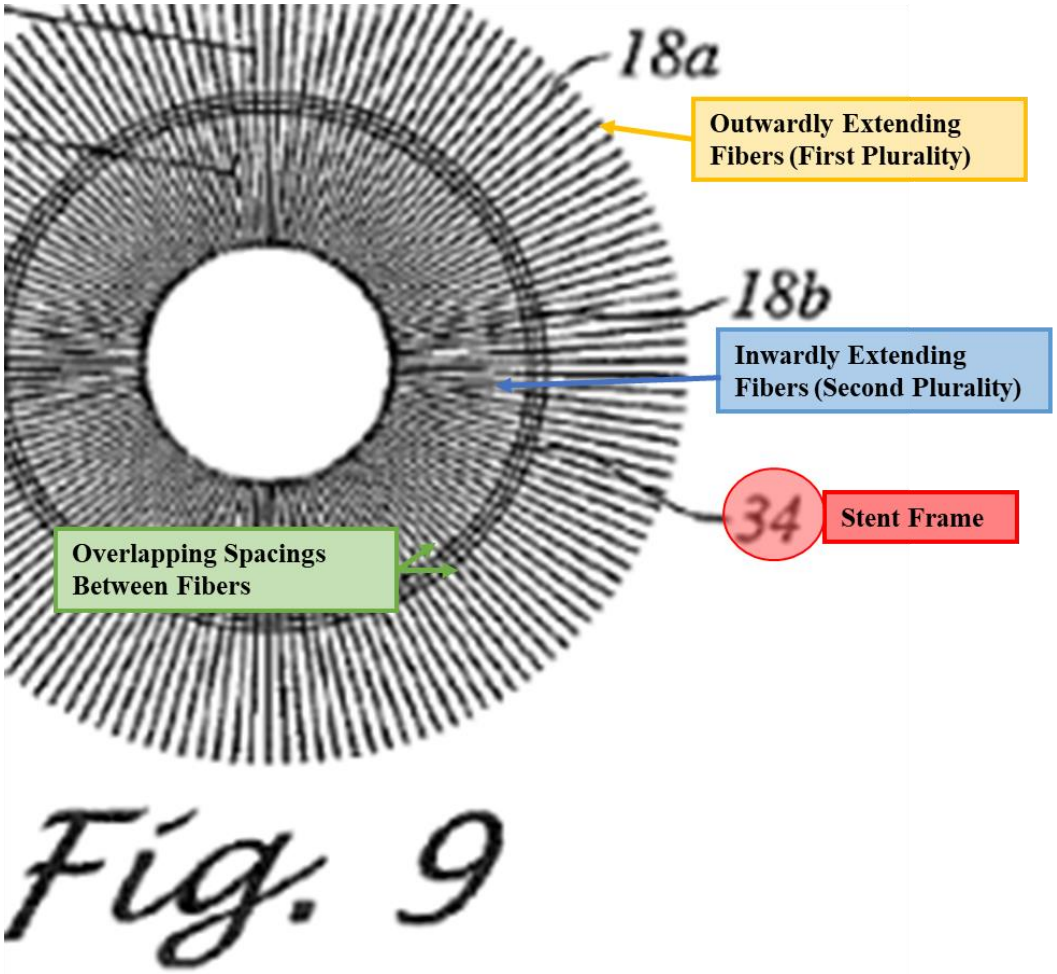

(Ex. 1116, Fig. 9; Ex. 1003, ¶320.) Therefore, POSITAs would have understood at least some of the overlapping spacings would extend through a thickness of the first plurality, the second plurality, and the open cells of the frame. (*Id.*, ¶320.)

c. <u>Seal About Spacing</u>

The individual extending fibers of Chuter's fiber pile "fill the gaps" between the outer wall of the implant and the inner wall of the native tissue. (Ex. 1116, [0064].) Chuter further teaches that when the device is deployed and expanded

within a patient, "fabric pile 18C press[es] against the inner luminal wall of the arterial system to form a seal." (*Id.*, [0059].) POSITAs would have understood Chuter's fiber pile would also press against a patient's native aortic valve when added to Spenser's or Levi's valve. (Ex. 1003, ¶322.)

17. <u>Claim 18</u>

Spenser ***or*** Levi in combination with Chuter renders claim 18 obvious for the reasons explained in claims 5, 15, and 17 above. (*Supra* §§VIII.B.5,14,16.)

C. <u>Grounds 4-6: Claims 1-6, 8-18 Obvious Over Spenser or Levi in Combination with Chuter and Spenser II</u>

As explained above, Spenser ***or*** Levi in combination with Chuter renders obvious claims 1-6 and 8-18 because those combinations disclose every claim element and POSITAs would have been motivated to add Chuter's fiber pile to Spenser's and Levi's valves to prevent PVL with a reasonable expectation of success. (*Supra* §VIII.B.) Spenser II would have provided POSITAs additional motivation to add Chuter's fiber pile to Spenser's and Levi's valves. (Ex. 1003, ¶336.) Spenser II teaches the addition of compressible materials to the outside of THVs for preventing PVL. (Ex. 1011, [00145].) POSITAs would have recognized Chuter's fiber pile as type of compressible material that could be combined with THV's to prevent PVL according to Spenser II's teachings. (Ex. 1003, ¶337.)

Accordingly, claims 1-6 and 8-18 would have been obvious over the combination of Spenser ***or*** Levi with Chuter and Spenser II. (*Id.*, ¶¶336-337.)

IX. SECONDARY CONSIDERATIONS

Petitioner understands that PO does not practice the ’834 patent or sell any products covered by the ’834 patent. Therefore, Petitioner is not aware of any evidence of secondary considerations. (Ex. 1003, ¶¶338-339.) If PO asserts that the ’834 patent solved a long-felt but unmet need, the Board has repeatedly rejected that argument in the prior IPRs. (Ex. 1117, 66-70; Ex. 1118, 71-74; Ex. 1119, 86-89.) If PO identifies any other alleged evidence of secondary considerations, Petitioner respectfully requests an opportunity to respond.

X. THE BOARD SHOULD NOT DENY INSTITUTION UNDER 35 U.S.C. §325(d)

Chuter was not considered by the Examiner during prosecution of the ’834 patent and, therefore, the Board should not exercise its discretion to deny institution under 35 U.S.C. §325(d).

The Board should also not exercise its discretion to deny institution under §325(d) because the Examiner erred in a manner material to the patentability of the challenged claims. As shown above, the challenged claims would have been obvious in view of the asserted prior art. Although Spenser, Spenser II, and Levi were of-

record during prosecution, the Examiner did not make ***any*** prior-art based rejections of the claims. Notably, the Board has determined in prior IPRs that the asserted prior art references render highly similar claims obvious. (*Supra* §II.) These prior IPRs reflect that the Examiner erred in allowing the claims.

PO also materially mischaracterized Spenser II during prosecution. PO argued that Spenser II discloses "a very tightly knitted outer seal made of tightly knitted fibers" and that "the lack of 'spacings' between some fibers would not allow for compression of the outwardly extending fibers." (Ex. 1002, 1001.) PO's argument is directly contradicted by the express disclosure of Spenser II. Spenser II plainly describes the outer sealing material as "compressible," contrary to PO's unsupported attorney argument. (*Supra* §VIII.A.2.) Moreover, Spenser II never describes the compressible material as "tightly knitted" or being made of "tightly knitted fibers." (*See* Ex. 1011, [00144]-[00145].) To the contrary, POSITA's would have understood Spenser II's compressible material to encompass loose, porous materials. (*Supra* §VIII.A.2.) Thus, PO's erroneous arguments during prosecution should not form a basis to deny institution under §325(d).

In the Notice of Allowance, the Examiner stated, "the closest prior art does not disclose or render obvious a prosthetic heart valve [having] a second plurality of fibers that is positioned radially inwardly from the first plurality of fibers, wherein

the second plurality of fibers [is] in direct contact with the frame." (Ex. 1002, 850.) As shown above, Spenser II and Chuter, which was not before the Examiner, disclose this limitation. Indeed, PO's arguments during prosecution and litigation confirm that Spenser II discloses that limitation. (*Supra* §§VIII.A.i, VIII.B.i.) Thus, the Examiner materially errored in granting the claims over the prior art and the Board should not exercise its discretion to deny institution under §325(d).

XI. MANDATORY NOTICES UNDER 37 C.F.R. §42.8(a)(1)

The following mandatory notices are provided as part of this Petition.

A. Real Party-In-Interest (37 C.F.R. §42.8(b)(1))

Edwards Lifesciences Corp. and Edwards Lifesciences LLC are the real parties in interest.

B. Related Matters (37 C.F.R. §42.8(b)(2))

Petitioner filed a Petition for *Inter Partes* Review of U.S. Patent No. 10,792,172 ("'172 patent"). *Edwards Lifesciences Corp. v. Aortic Innovations, LLC,* IPR2021-01527 (Filed Sept. 10, 2021). Petitioner also filed a Petition for *Inter Partes* Review of U.S. Patent No. 10,857,011 ("the '011 patent"). *Edwards Lifesciences Corp. v. Aortic Innovations, LLC,* IPR2021-01584 (Filed Sept. 28, 2021). Petitioner also filed a Petition for *Inter Partes* Review of U.S. Patent No. 10,966,846 ("'the '846 patent"). *Edwards Lifesciences Corp. v. Aortic Innovations,*

LLC, IPR2022-00034 (Filed Oct. 11, 2021). Petitioner also filed a Petition for *Inter Partes* Review of U.S. Patent No. 10,881,538 ("the '538 patent"). *Edwards Lifesciences Corp. v. Aortic Innovations, LLC,* IPR2022-00193 (Filed Nov. 11, 2021). Petitioner filed a Petition for *Inter Partes* Review of U.S. Patent No. 11,129,735 ("the '735 patent"). *Edwards Lifesciences Corp. v. Aortic Innovations, LLC,* IPR2022-000549 (Filed February 4, 2022). Petitioner also filed a Petition for *Inter Partes* Review of U.S. Patent No. 10,987,236 ("the '236 patent"). *Edwards Lifesciences Corp. v. Aortic Innovations, LLC,* IPR2022-00556 (Filed February 7, 2022). The '834 patent is part of the same patent family and shares a specification with the '172, '011,'846, '538, '735, and '236 patents. The status and outcomes of Edwards' prior IPRs is summarized in section II above.

PO recently filed suit alleging that Petitioner's SAPIEN 3 Ultra valve infringes the '834 patent, as well as U.S. Patent Nos. 11,523,918; 11,491,033; 11,497,634; and 11,389,310. *Aortic Innovations LLC v. Edwards Lifesciences Corp.,* Case No. 1:23-00158-JPM (D. Del., filed Feb. 13, 2023). The court has not set a trial date in the litigation. The court has scheduled a claim construction hearing for March 21, 2024.

Petitioner is not aware of any other judicial or administrative matter that would affect, or be affected by, a decision in this proceeding.

C. Lead and Backup Counsel (37 C.F.R. §42.8(b)(3))

Petitioner provides the following designation of counsel, all of whom are included in Customer No. 20,995 identified in Petitioner's Power of Attorney.

Lead Counsel	Back-up Counsel
Joshua J. Stowell (Reg. No. 64,096) 2jys@knobbe.com BoxEdwards28-1@knobbe.com Postal and Hand-Delivery Address: Knobbe, Martens, Olson & Bear, LLP 2040 Main Street, 14th Floor Irvine, CA 92614 Telephone: (949) 760-0404 Facsimile: (949) 760-9502	Craig S. Summers (Reg. No. 31,430) 2css@knobbe.com Brian C. Barnes (Reg. No. 75,805) 2bcb@knobbe.com Postal and Hand-Delivery Address: Knobbe, Martens, Olson & Bear, LLP 2040 Main Street, 14th Floor Irvine, CA 92614 Telephone: (949) 760-0404 Facsimile: (949) 760-9502

D. Service Information Under 37 C.F.R. §42.8(b)(4)

Please address all correspondence to lead counsel and back-up counsel at the addresses shown above. Petitioner also consents to electronic service by email to BoxEdwards28-1@knobbe.com.

XII. FEES

The fee for this petition has been paid. Any additional fees may be charged to Deposit Account 11-1410.

XIII. GROUNDS FOR STANDING UNDER 37 C.F.R. §42.104

Petitioner certifies that the ’834 patent is available for IPR and that Petitioner is not barred or estopped from requesting IPR challenging the patent claims on the identified grounds.

XIV. CONCLUSION

For the reasons above, Petitioner has established a reasonable likelihood of prevailing in showing that the challenged claims are unpatentable as obvious and, therefore, requests that the Board institute an *inter partes* review and cancel the claims.

Respectfully submitted,

KNOBBE, MARTENS, OLSON & BEAR, LLP

Dated: June 29, 2023

By: */Joshua J. Stowell/*
Joshua J. Stowell (Reg. No. 64,096)
Craig S. Summers (Reg. No. 31,430)
Brian C. Barnes (Reg. No. 75,805)
Customer No. 20,995

Attorneys for Petitioners
EDWARDS LIFESCIENCES CORP. AND
EDWARDS LIFESCIENCES LLC

CERTIFICATE OF COMPLIANCE

Pursuant to 37 C.F.R. §42.24(d), the undersigned certifies that the foregoing **PETITION FOR *INTER PARTES* REVIEW OF U.S. PATENT NO. 11,337,834**, exclusive of the parts exempted as provided in 37 C.F.R. §42.24(a), contains 13,949 words and therefore complies with the type-volume limitations of 37 C.F.R. §42.24(a).

Respectfully submitted,

KNOBBE, MARTENS, OLSON & BEAR, LLP

Dated: June 29, 2023

By: */Joshua J. Stowell/*
Craig S. Summers (Reg. No. 31,430)
Joshua J. Stowell (Reg. No. 64,096)
Brian C. Barnes (Reg. No. 75,805)
Customer No. 20,995

Attorneys for Petitioners
EDWARDS LIFESCIENCES CORP. AND
EDWARDS LIFESCIENCES LLC

CERTIFICATE OF SERVICE

I hereby certify that a true and correct copy of the foregoing **PETITION FOR *INTER PARTES* REVIEW OF U.S. PATENT NO. 11,337,834** and **EXHIBITS 1001 – 1139** are being served via Federal Express overnight mail on counsel of record for U.S. Patent 11,337,834 as addressed below:

Justin Nifong
NK Patent Law
4917 Waters Edge Drive, Suite 275
Raleigh, NC 27606

Dated: June 29, 2023 By: */Joshua J. Stowell/*

Craig S. Summers (Reg. No. 31,430)
Joshua J. Stowell (Reg. No. 64,096)
Brian C. Barnes (Reg. No. 75,805)
Customer No. 20,995

Attorneys for Petitioners
EDWARDS LIFESCIENCES CORP. AND
EDWARDS LIFESCIENCES LLC