US 20070097976A1

(19) United States

(12) Patent Application Publication

(10) Pub. No.: US 2007/0097976 A1

(43) Pub. Date: May 3, 2007

Wood et al.

(54) SUSPECT TRAFFIC REDIRECTION

(76) Inventors: **George D. Wood**, Scottsdale, AZ (US); **Victor Oppleman**, Virginia Beach, VA (US); **Brett Watson**, Scottsdale, AZ (US); **Rodney Joffe**, Tempe, AZ (US); **Zachary Kanner**, Virginia Beach, VA (US); **James Willett**, Phoenix, AZ (US); **Mark Broyles**, Phoenix, AZ (US); **Jesse Dunagan**, Gilbert, AZ (US)

Correspondence Address:
HENSLEY KIM & EDGINGTON, LLC
1660 LINCOLN STREET, SUITE 3050
DENVER, CO 80264 (US)

(21) Appl. No.: **11/437,264**

(22) Filed: **May 19, 2006**

Related U.S. Application Data

(60) Provisional application No. 60/683,439, filed on May 20, 2005.

Publication Classification

(51) **Int. Cl.**
H04L 12/56 (2006.01)

(52) **U.S. Cl.** **370/392**; 370/401

(57) **ABSTRACT**

A system receives suspect traffic information pertaining to possible network threats. A router detects and redirects suspect traffic from within a subnetwork to an interrogation module. The interrogation module receives the redirected suspect traffic and identifies the source device from within the subnetwork. The interrogation module can also identify the type of suspect traffic, the original destination of the suspect traffic and the protocol type of the packet. Suspect traffic information can be updated and the router can be reconfigured to accommodate the updated information.

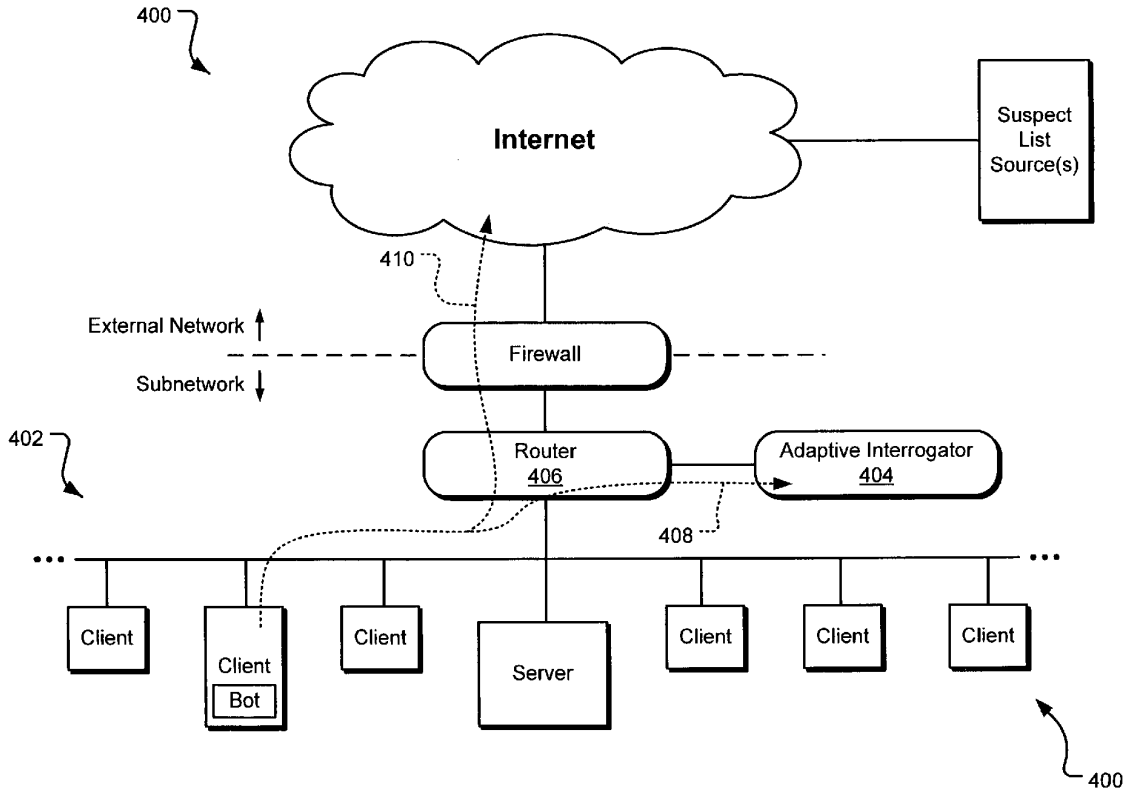

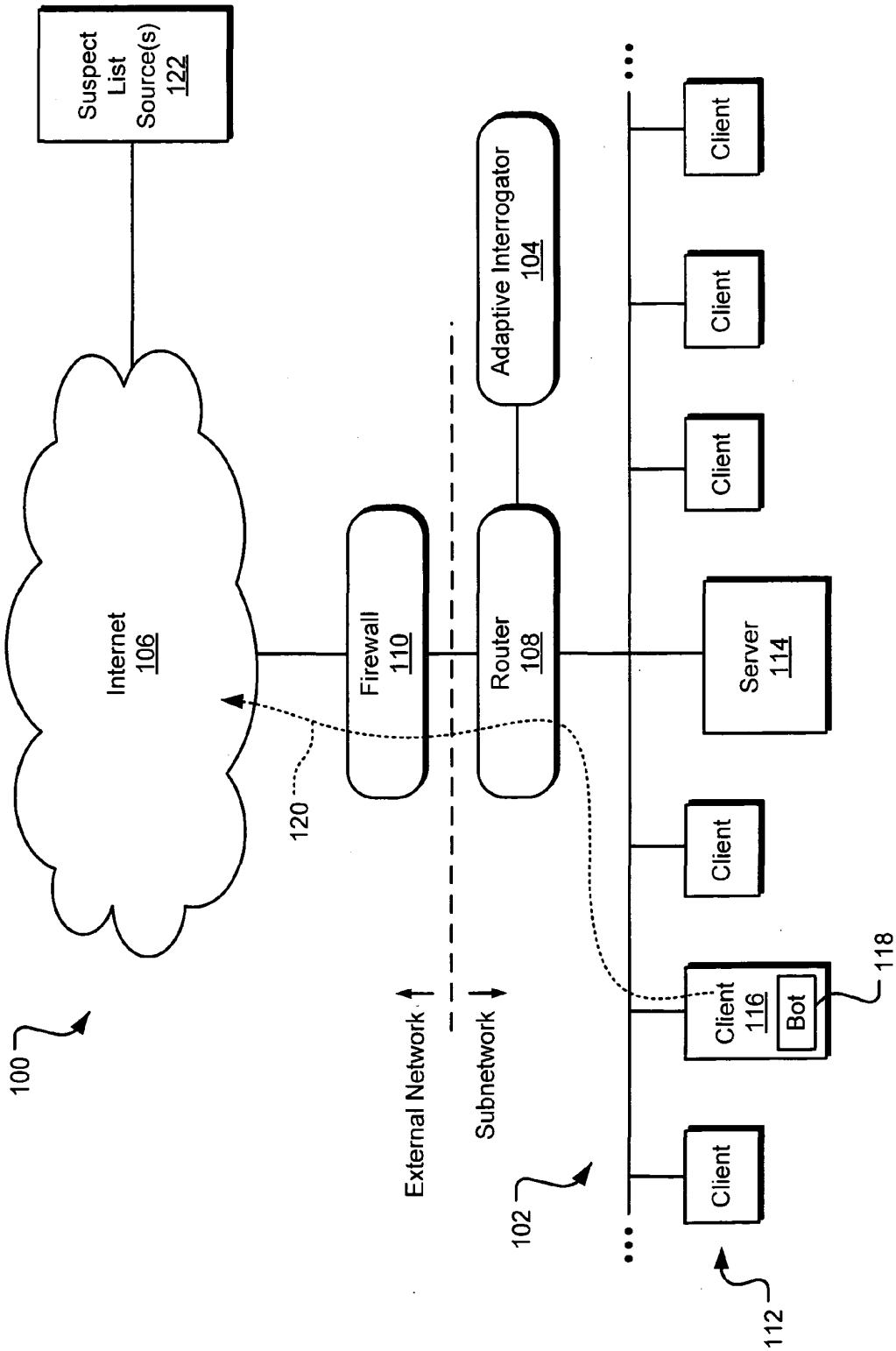
Suspect List Source(s) 122
Internet 106
Firewall 110
Adaptive Interrogator 104
Router 108
Server 114
Client
Client
Client
Client
Client 116
Bot
Client
External Network
Subnetwork
100
102
112
118
120

Fig. 1

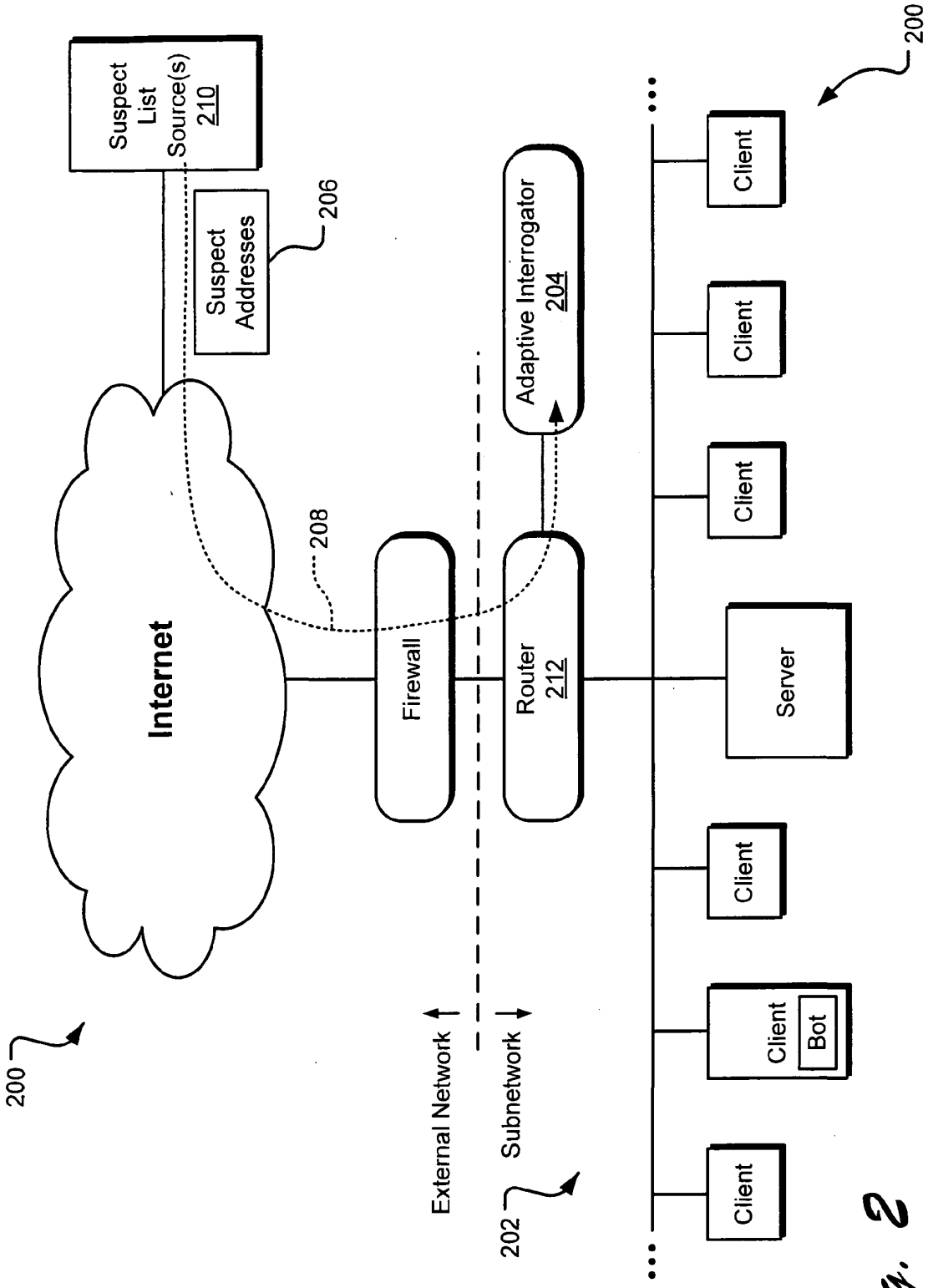
200
Internet
Suspect List Source(s) 210
Suspect Addresses
206
208
Firewall
Adaptive Interrogator 204
Router 212
External Network
Subnetwork
202
Client
Client
Client
Server
Client
Client
Bot
Client
200

Fig. 2

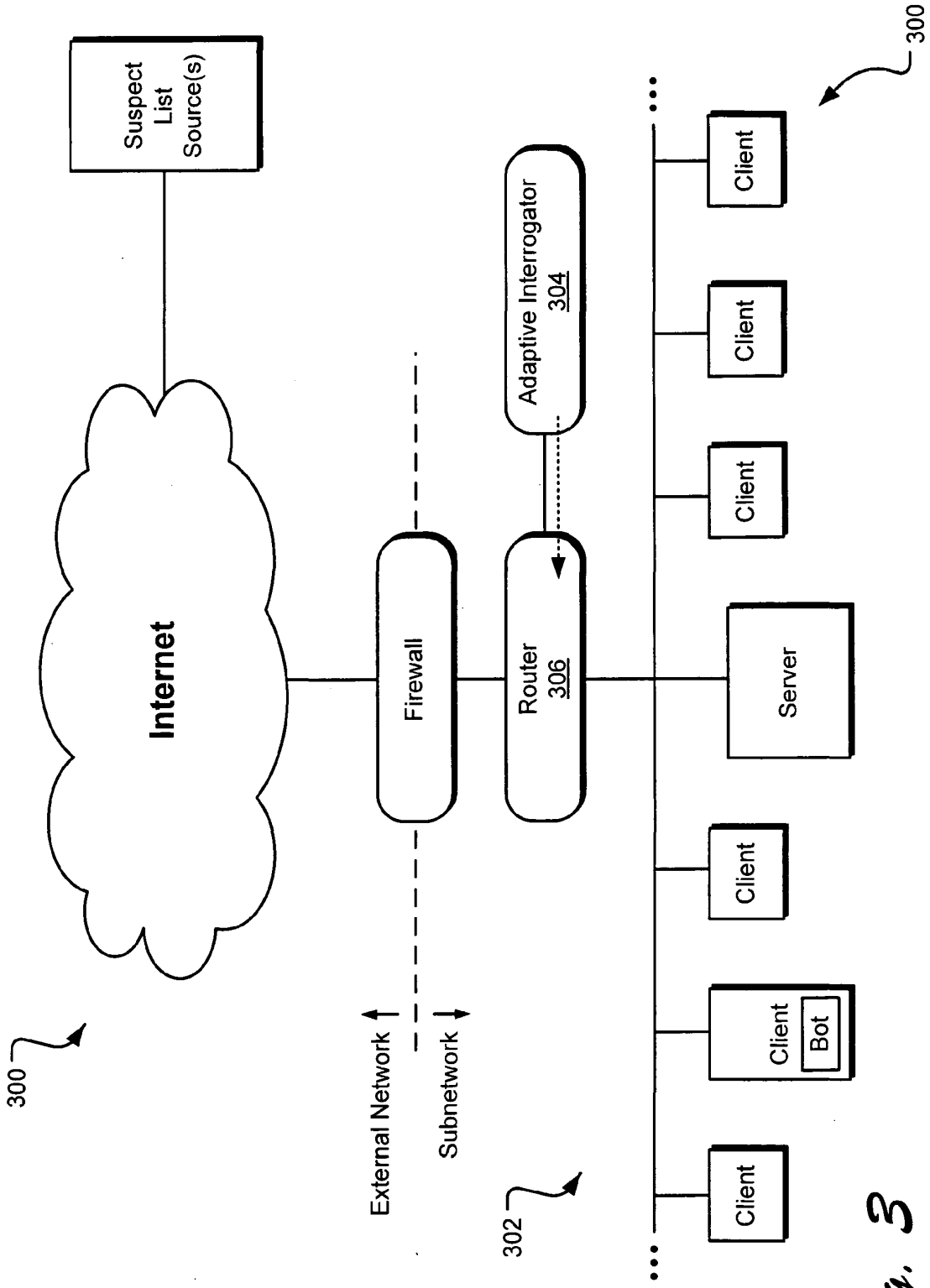
300
Suspect List Source(s)
Internet
Firewall
Adaptive Interrogator 304
Router 306
Client
Client
Client
Server
Client
Client
Bot
Client
External Network
Subnetwork
300
302

Fig. 3

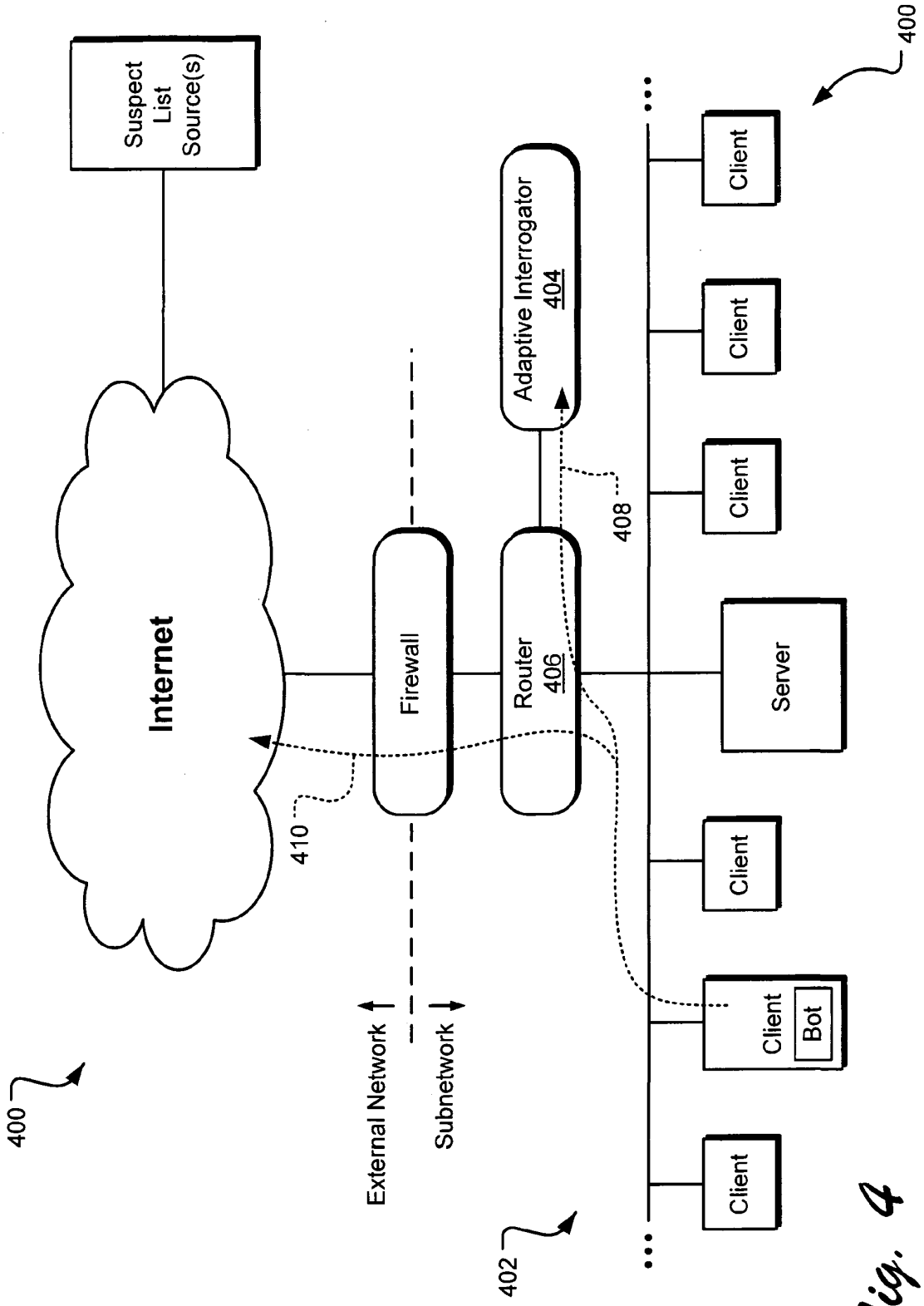
400
Suspect List Source(s)
Internet
410
External Network
Subnetwork
Firewall
Router 406
Adaptive Interrogator 404
408
402
Client
Client
Client
Server
Client
Client Bot
Client
400

Fig. 4

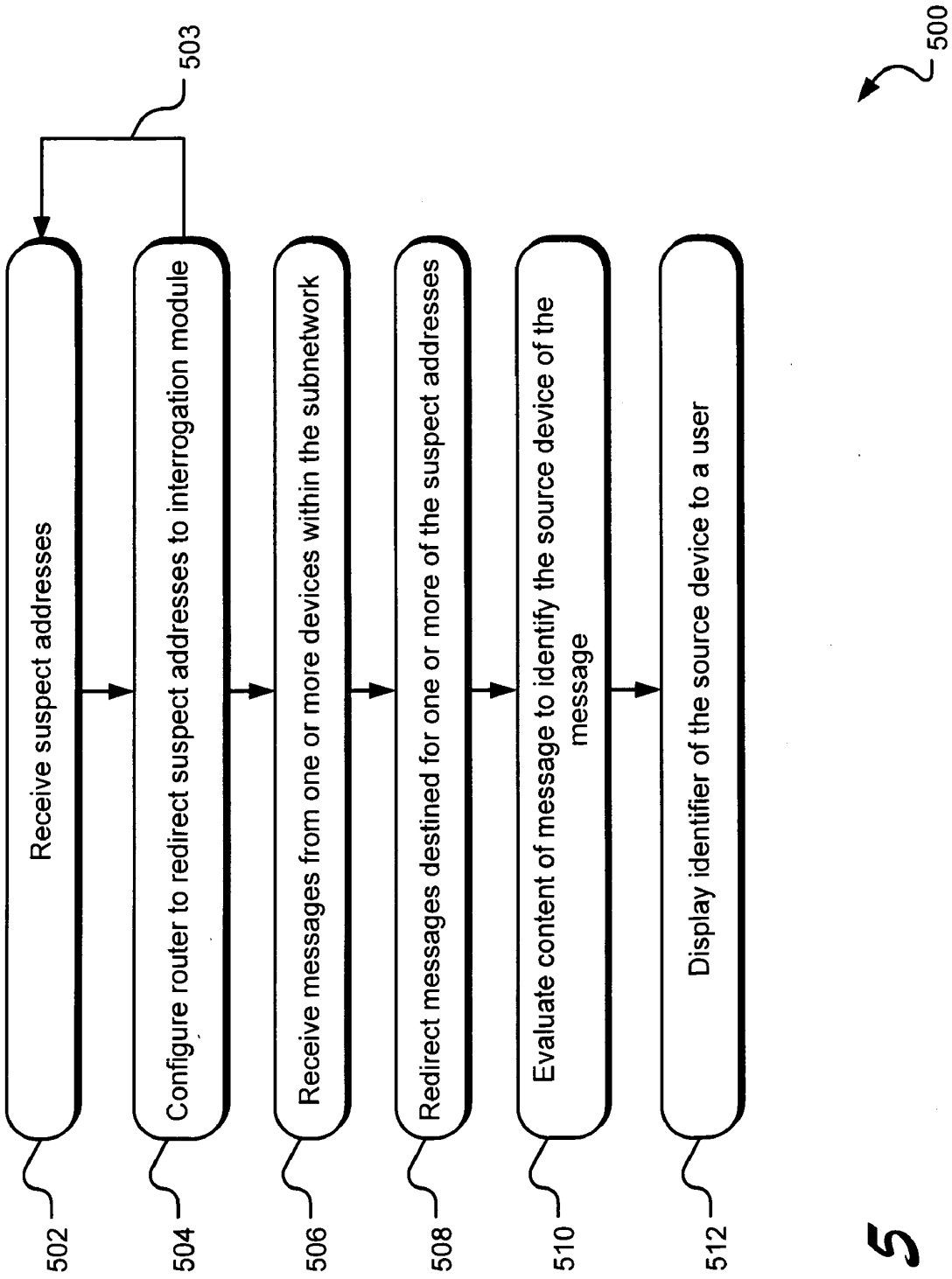
500
503
Receive suspect addresses
Configure router to redirect suspect addresses to interrogation module
Receive messages from one or more devices within the subnetwork
Redirect messages destined for one or more of the suspect addresses
Evaluate content of message to identify the source device of the message
Display identifier of the source device to a user
502
504
506
508
510
512

Fig. 5

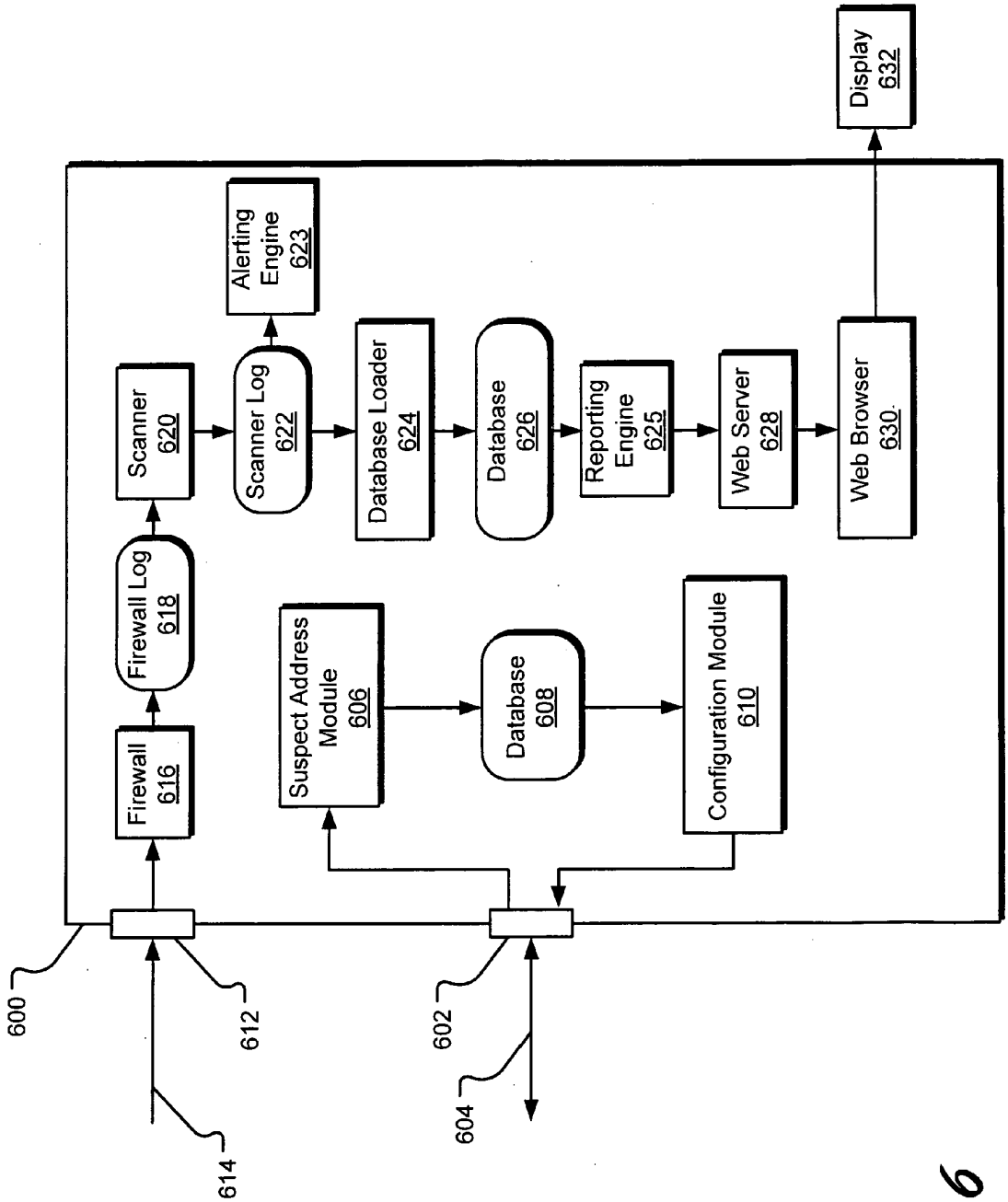
600
612
614
602
604
Firewall 616
Firewall Log 618
Scanner 620
Scanner Log 622
Alerting Engine 623
Database Loader 624
Database 626
Reporting Engine 625
Web Server 628
Web Browser 630
Display 632
Suspect Address Module 606
Database 608
Configuration Module 610

Fig. 6

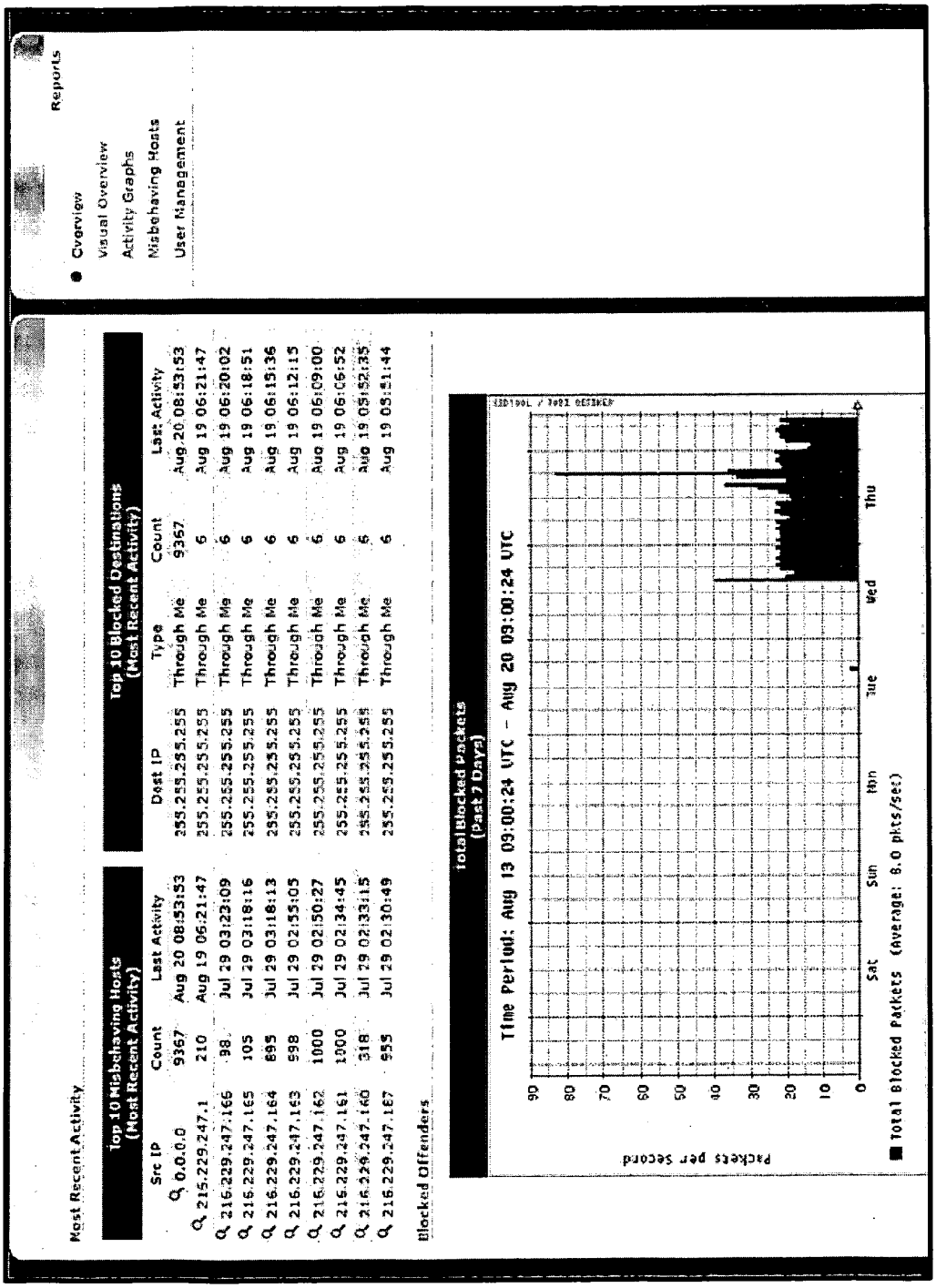
Reports
Overview
Visual Overview
Activity Graphs
Misbehaving Hosts
User Management
Most Recent Activity
Top 10 Misbehaving Hosts (Most Recent Activity)
Src IP
Count
Last Activity
0.0.0.0 9367 Aug 20 08:53:53
215.229.247.1 210 Aug 19 06:21:47
216.229.247.166 98 Jul 29 03:23:09
216.229.247.165 105 Jul 29 03:18:16
216.229.247.164 895 Jul 29 03:18:13
216.229.247.163 598 Jul 29 02:55:05
216.229.247.162 1000 Jul 29 02:50:27
216.229.247.161 1000 Jul 29 02:34:45
216.229.247.160 318 Jul 29 02:33:15
216.229.247.187 955 Jul 29 02:30:49
Top 10 Blocked Destinations (Most Recent Activity)
Dest IP
Type
Count
Last Activity
255.255.255.255 Through Me 9367 Aug 20 08:53:53
255.255.255.255 Through Me 6 Aug 19 06:21:47
255.255.255.255 Through Me 6 Aug 19 06:20:02
255.255.255.255 Through Me 6 Aug 19 06:18:51
255.255.255.255 Through Me 6 Aug 19 06:15:36
255.255.255.255 Through Me 6 Aug 19 06:12:15
255.255.255.255 Through Me 6 Aug 19 06:09:00
255.255.255.255 Through Me 6 Aug 19 06:06:52
255.255.255.255 Through Me 6 Aug 19 05:52:35
255.255.255.255 Through Me 6 Aug 19 05:51:44
Blocked Offenders
Total Blocked Packets (Past 7 Days)
Time Period: Aug 13 09:00:24 UTC - Aug 20 09:00:24 UTC
Packets per Second
90
80
70
60
50
40
30
20
10
0
Sat
Sun
Mon
Tue
Wed
Thu
Total Blocked Packets (Average: 8.0 pkts/sec)

700

Fig. 7

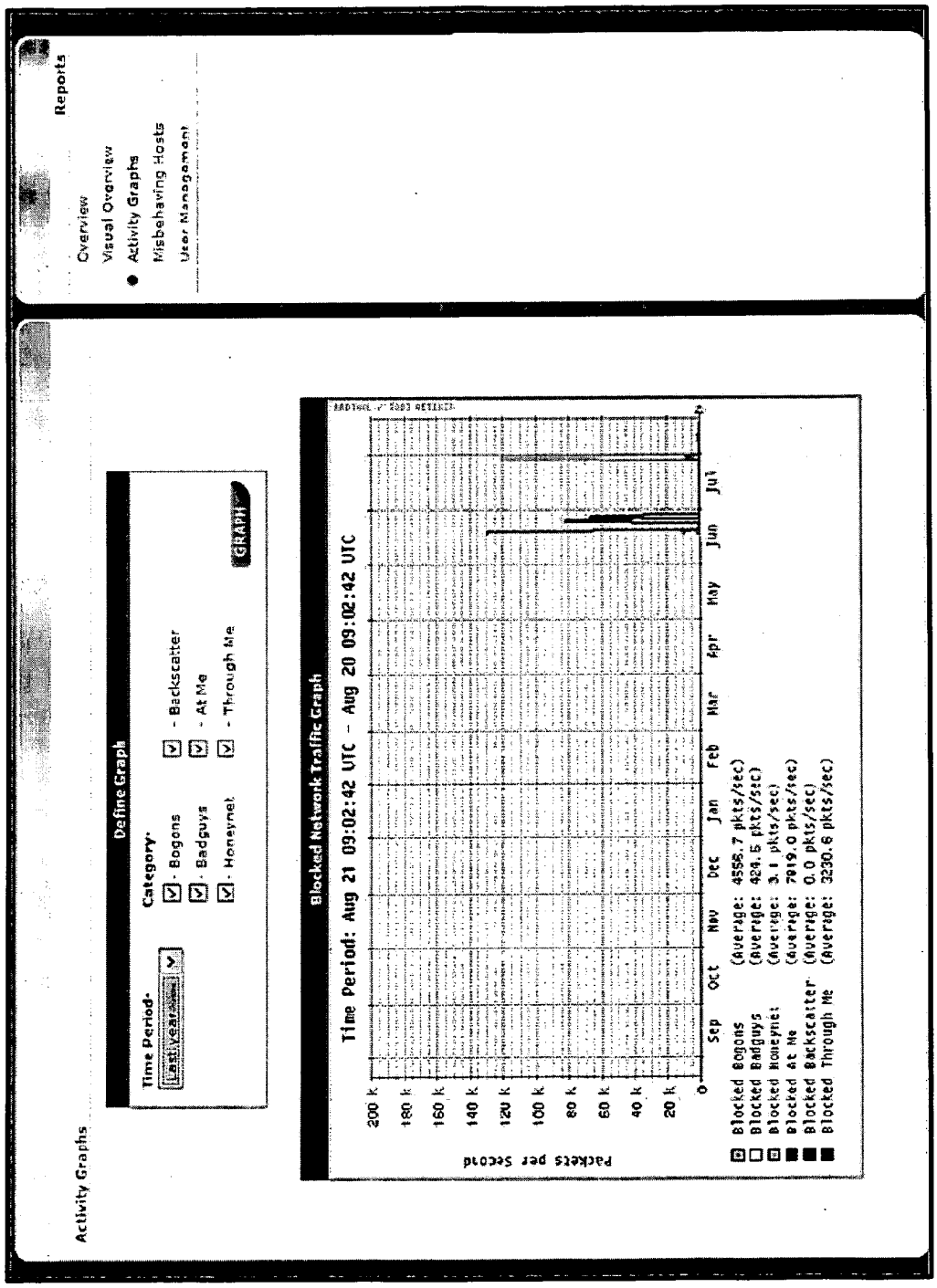
Reports
Overview
Visual Overview
Activity Graphs
Misbehaving Hosts
User Management
Activity Graphs
Define Graph
Time Period:
Last year
Category:
- Bogons
- Badguys
- Honeynet
- Backscatter
- At Me
- Through Me
GRAPH
Blocked Network Traffic Graph
Time Period: Aug 21 09:02:42 UTC - Aug 20 09:02:42 UTC
Packets per Second
200 k
180 k
160 k
140 k
120 k
100 k
80 k
60 k
40 k
20 k
0
Sep
Oct
Nov
Dec
Jan
Feb
Mar
Apr
May
Jun
Jul
Blocked Bogons (Average: 4558.7 pkts/sec)
Blocked Badguys (Average: 424.5 pkts/sec)
Blocked Honeynet (Average: 3.1 pkts/sec)
Blocked At Me (Average: 7919.0 pkts/sec)
Blocked Backscatter (Average: 0.0 pkts/sec)
Blocked Through Me (Average: 3230.6 pkts/sec)

800

Fig. 8

900

Detailed Activity Records

Search

IP Address Type*
- Source Address
- Destination Address

IP Address*
(ex 10.10.10.1)

Traffic Type*
All types
Bogons
Badguys

SUBMIT

Search Help
* Leave field blank to match all records

Showing Records 1-25 of 12884 First | Previous | Next | Last

Source Socket	Destination Socket	Protocol	Type	Count	Activity Timestamp
0.0.0.0:68	255.255.255.255:67	UDP	Through Me	9367	Aug 20 08:53:53
216.229.247.1:58819	255.255.255.255:53	UDP	Through Me	6	Aug 19 06:21:47
216.229.247.1:57684	255.255.255.255:53	UDP	Through Me	6	Aug 19 06:20:02
216.229.247.1:58794	255.255.255.255:53	UDP	Through Me	6	Aug 19 06:18:51
216.229.247.1:57424	255.255.255.255:53	UDP	Through Me	6	Aug 19 06:15:36
216.229.247.1:49832	255.255.255.255:53	UDP	Through Me	6	Aug 19 06:12:15
216.229.247.1:49783	255.255.255.255:53	UDP	Through Me	6	Aug 19 06:09:00
216.229.247.1:55040	255.255.255.255:53	UDP	Through Me	6	Aug 19 06:06:52
216.229.247.1:51065	255.255.255.255:53	UDP	Through Me	6	Aug 19 05:52:35
216.229.247.1:57792	255.255.255.255:53	UDP	Through Me	6	Aug 19 05:51:44
216.229.247.1:53943	255.255.255.255:53	UDP	Through Me	6	Aug 19 05:50:40
216.229.247.1:53232	255.255.255.255:53	UDP	Through Me	6	Aug 19 05:50:29
216.229.247.1:49242	255.255.255.255:53	UDP	Through Me	6	Aug 19 05:48:47
216.229.247.1:56130	255.255.255.255:53	UDP	Through Me	6	Aug 19 05:47:48
216.229.247.1:54969	255.255.255.255:53	UDP	Through Me	6	Aug 19 05:46:51
216.229.247.1:59075	255.255.255.255:53	UDP	Through Me	6	Aug 19 05:46:38
216.229.247.1:55460	255.255.255.255:53	UDP	Through Me	6	Aug 19 05:34:50
216.229.247.1:54899	255.255.255.255:53	UDP	Through Me	6	Aug 19 05:34:30
216.229.247.1:50268	255.255.255.255:53	UDP	Through Me	6	Aug 19 05:32:37
216.229.247.1:56870	255.255.255.255:53	UDP	Through Me	6	Aug 19 05:32:12
216.229.247.1:52495	255.255.255.255:53	UDP	Through Me	6	Aug 19 05:31:44
216.229.247.1:52693	255.255.255.255:53	UDP	Through Me	6	Aug 19 05:19:10
216.229.247.1:55044	255.255.255.255:53	UDP	Through Me	6	Aug 19 04:33:10
216.229.247.1:53512	255.255.255.255:53	UDP	Through Me	6	Aug 19 04:31:13
216.229.247.1:52460	255.255.255.255:53	UDP	Through Me	6	Aug 19 04:30:58

Reports
- Overview
- Visual Overview
- Activity Graphs
- Misbehaving Hosts
- User Management

Fig. 9

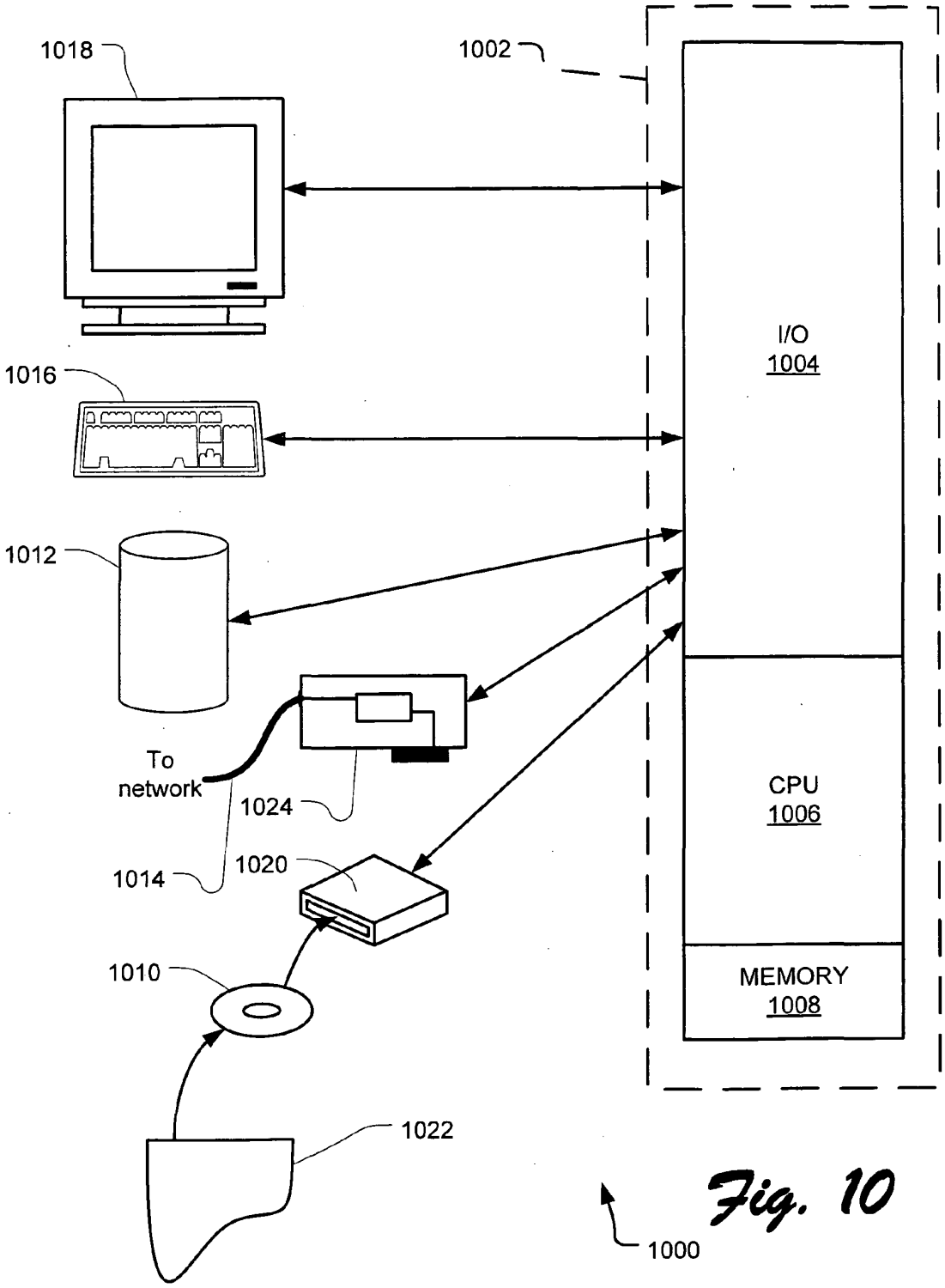
1018
1002
I/O
1004
1016
1012
To
network
1024
CPU
1006
1014
1020
1010
MEMORY
1008
1022
1000

Fig. 10

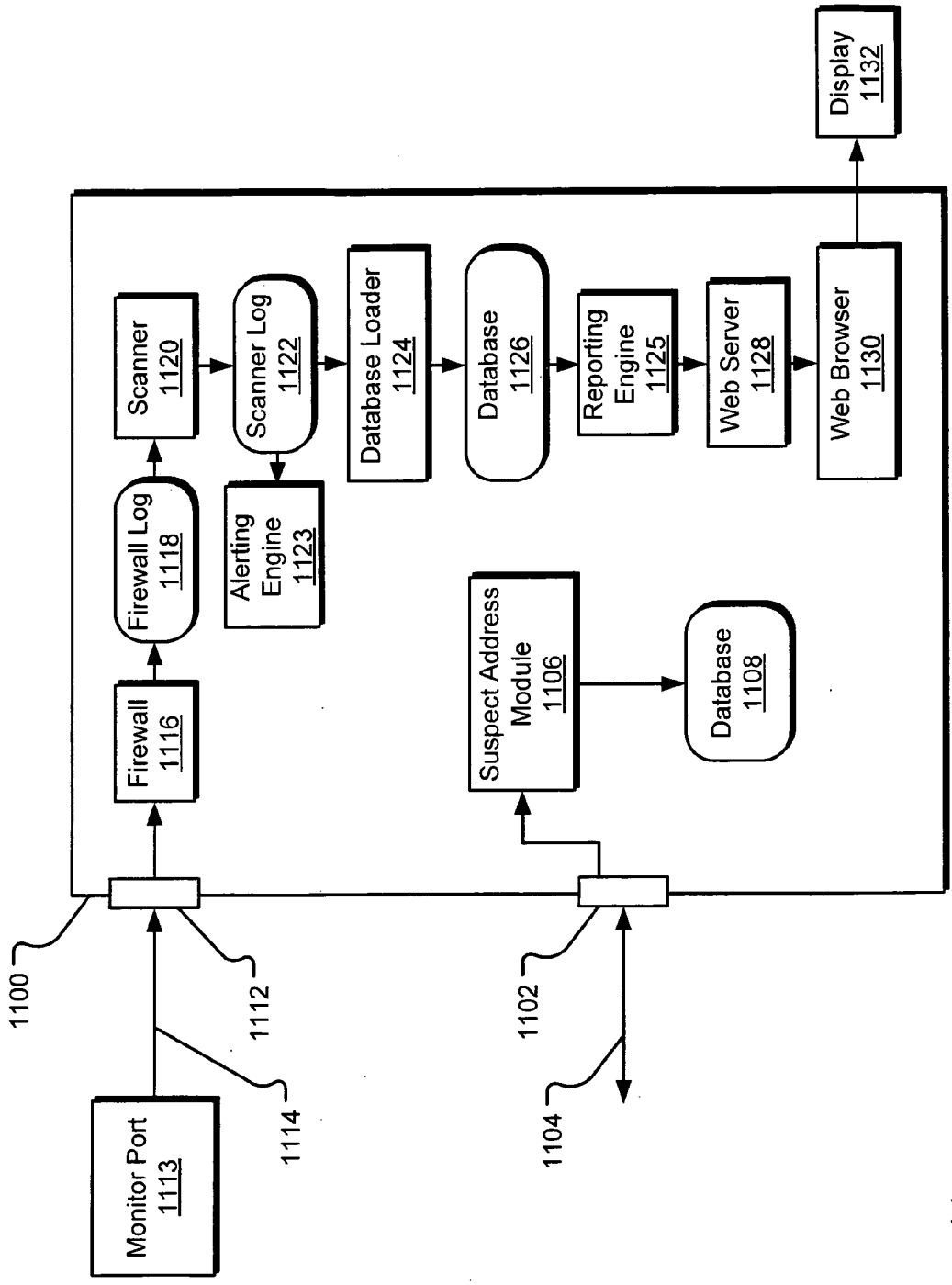
Monitor Port 1113
1100
1112
1114
Firewall 1116
Firewall Log 1118
Scanner 1120
Scanner Log 1122
Alerting Engine 1123
Database Loader 1124
Database 1126
Reporting Engine 1125
Web Server 1128
Web Browser 1130
Display 1132
Suspect Address Module 1106
Database 1108
1102
1104

Fig. 11

SUSPECT TRAFFIC REDIRECTION

CROSS-REFERENCE TO RELATED APPLICATIONS

[0001] This application claims benefit of U.S. Provisional Patent Application No. 60/683,439, entitled "Suspect Traffic Redirection" and filed on May 20, 2005, specifically incorporated herein by reference for all that it discloses and teaches.

TECHNICAL FIELD

[0002] The invention relates generally to a computer network, and more particularly to computer network security.

BACKGROUND

[0003] Modern computer systems are under constant threat of security breaches. Viruses, worms, data miners, key loggers, trojans, "bots", "botnets", spy ware, and malware are common terms used to describe types of software that can infect a computer system within a network. For example, in a common scenario, a trojan software component can be received and activated through a user's email system. A trojan is a specialized piece of software that is distributed by stealth, misdirection, or mimicry to infect other computer systems with a malicious payload. Once a trojan is received by a computer system, it can deposit the payload on the system.

[0004] Forms of malware can also be attracted by a host who is visiting a website that is infected, using an Internet connection that is compromised, or using a piece of software that has malware already resident in it. In other words, the infection can be contracted regardless of traditional security defense systems like firewalls, anti-virus software, anti-spyware software, intrusion detection systems, web proxies, and the like.

[0005] This payload often embodies autonomous software, sometimes termed a "bot", which operates as an agent for another entity, such as a hacker, an identity thief, etc. The bot can execute within the computer system (e.g., within a company's subnetwork) and establish a connection over a network with another computer outside the company's subnetwork. In many cases, the bot is programmed to circumvent conventional security features of the computer system or the subnetwork in which it resides. For example, a bot commonly attempts to connect with the entity by probing a set of network addresses, in the hope that it will find a response. If the bot receives a response it understands from a program at one of these network addresses, the bot can maintain the connection with the remote program at that address and gather its next set of instructions from the remote program, thereby providing the remote program with access to the computer's resources from within the computer's security framework. Because the communications are initiated within the computer system and/or subnetwork rather than from another device or from the external network, traditional defense system within a company's security framework generally fail to detect the intrusions.

[0006] Existing approaches for protecting a computer against these kinds of threats include firewalls, antivirus software, spyware protection software, Intrusion Detection Systems (IDSs), Intrusion Prevention Systems (IPSs), and other types of prophylactic software and systems. However, these solutions do not adequately provide real-time detection and diagnostic information to allow a system administrator to identify an infected computer that has attracted a form of malware within the subnetwork and take corrective action.

SUMMARY

[0007] Implementations described and claimed herein address the foregoing problems by detecting and redirecting suspect traffic from within a subnetwork and evaluating the redirected suspect traffic to identify an infected device within the subnetwork. An adaptive system receives suspect traffic information pertaining to possible network threats. A router detects and redirects suspect traffic from within a subnetwork to an interrogation module. The interrogation module receives the redirected suspect traffic and identifies the source device from within the subnetwork. The interrogation module can also identify the type of suspect traffic, the original destination of the suspect traffic and the protocol type of a packet within the suspect traffic. Suspect traffic information can be updated and the router can be reconfigured to accommodate the updated information.

[0008] In some implementations, articles of manufacture are provided as computer program products. One implementation of a computer program product provides a tangible computer program storage medium readable by a computer system and encoding a computer program. Another implementation of a computer program product may be provided in a computer data signal embodied in a carrier wave or other communication media by a computing system and encoding the computer program.

[0009] Other implementations are also described and recited herein.

BRIEF DESCRIPTION OF THE DRAWINGS

[0010] FIG. **1** illustrates an external network and a subnetwork with an exemplary adaptive interrogation module connected within the subnetwork.

[0011] FIG. **2** illustrates an external network and a subnetwork with an exemplary adaptive interrogation module connected within the subnetwork and receiving suspect addresses.

[0012] FIG. **3** illustrates an external network and a subnetwork with an exemplary adaptive interrogation module connected within the subnetwork and configuring a router.

[0013] FIG. **4** illustrates an external network and a subnetwork with an exemplary adaptive interrogation module connected within the subnetwork, with a router redirecting suspect traffic.

[0014] FIG. **5** illustrates exemplary operations for redirecting suspect traffic.

[0015] FIG. **6** illustrates a schematic diagram of an exemplary interrogation device.

[0016] FIG. **7** illustrates an exemplary screenshot of an overview graph from an adaptive interrogation device.

[0017] FIG. **8** illustrates an exemplary screenshot of an activity graph from an adaptive interrogation device.

[0018] FIG. **9** illustrates an exemplary screenshot of a misbehaving hosts table from an adaptive interrogation device.

[0019] FIG. **10** illustrates an exemplary system useful in implementations of the described technology.

[0020] FIG. **11** illustrates another schematic diagram of an exemplary interrogation device.

DETAILED DESCRIPTIONS

[0021] FIG. **1** illustrates an external network **100** and a subnetwork **102** with an exemplary adaptive interrogation module **104** connected within the subnetwork **102**. The Internet **106** typically lies within the external network **100**, although the external network **100** may not include the Internet **106** in other implementations. The subnetwork **102** is attached to the external network **100** by a router **108**, a device which forwards packets between the networks. The forwarding decision is typically based on network layer information and routing tables, which are often constructed by routing protocols. A router can also be configured to handle specific network packets in a predefined way. For example, incoming packets from certain addresses can be redirected to a null address, effectively blocking the packet traffic.

[0022] In addition to the router **108**, the subnetwork **102** may also be protected by a firewall **110**. All messages entering or leaving the intranet pass through the firewall, which examines each message and blocks those that do not meet the specified security criteria. There are several types of firewall techniques, including without limitation:

[0023] a Packet filtering: Examining each packet entering or leaving the network and accepting or rejecting it based on user-defined rules.

[0024] Application gateway filtering: Appling security mechanisms to specific applications and services, such as FTP and Telnet servers.

[0025] Circuit-level gateway filtering: Applying security mechanisms when a TCP or UDP connection is established. Once the connection has been made, packets can flow between the hosts without further checking.

[0026] Proxy serving: Intercepting all messages entering and leaving the network. The proxy server effectively hides the true network addresses.

[0027] Various security threats exist within the external network **100** including so-called "command and control" nodes—computers executing control programs that communicate with and manipulate one or more remote malicious agents, called "bots". Generally, bots represent noninteractive processes (i.e., not interactive with or intentionally initiated by the user) executing within a computing devices anywhere on the external network **100** and attached subnetworks. Typically, the bots are installed on these computing devices by a virus or some other malware program and are unknown to the user. For example, the virus can contain a payload containing malicious yet stealthy agent code and can be communicated by email. When the user executes the virus (e.g., by opening an infected email), the agent is installed and initiated on the user's systems. The agent can be programmed to perform a variety of operations (e.g., execute a denial-of-service attack on a given website). Alternatively, the agent can attempt to connect with a command and control node on the external network **100** and provide specific services. For example, the agent can provide sensitive information on the user's system to the command and control node. The noninteractive nature of these processes contributes to their dangerous nature because they remain unknown to the user.

[0028] In one scenario, the subnetwork **102** includes a variety of computing devices **112**, including a server **114** and a client **116**, which are examples of source devices that may execute noninteractive processes originating suspect traffic. The client **116** has been infected with a bot agent **118**, which attempts to initiate communications **120** with an address on the external network **100** without any interaction by the user. For example, the agent **118** may scan a set of addresses on the external network **100** until it receives a response. Under typical security conditions, the router **108** and firewall **110** will not block communications from the external network **100** that are in response to a request from inside the subnetwork **102**. Accordingly, by infecting the client **116** inside the subnetwork **102**, a command and control node in the external network **100** may gain access to a device in the subnetwork **102**.

[0029] However, a great number of the external network addresses that the agent **118** might try to contact fall into a category of suspect addresses. One category of suspect addresses may be termed "bogons", which describes Internet Protocol (IP) blocks not allocated by the Internet Assigned Numbers Authority (IANA) and Regional Internet Registries (RIRs) to Internet Service Providers (ISPs) and other organizations. The term "bogon" can also include other IP address blocks that are reserved for private or special use by various organizations and standards. As these bogon addresses are not allocated or specially reserved, such addresses should not be routable and used on the internet. Nevertheless, some of these addresses do appear on the network, sometimes used by those individuals and organizations that are specifically trying to avoid being identified and/or involved in such activities as DoS attacks, email abuse, hacking and other security problems. Accordingly, bogons represent a type of suspect address. Other suspect address categories may also be identified. For example, IP addresses of known threats (e.g., a known hacker, a known phisher, a known pharmer, a known command and control node, etc.) can be added to the suspect address list.

[0030] Generally, the suspect addresses are available from one or more suspect address sources **122**, which are shown in FIG. **1** as being exclusively external to the subnetwork **102** but which may be located external or internal to the subnetwork **102** or in some combination thereof. For example, the adaptive interrogation module **104** may receive a feed of suspect addresses from one or more sources on the external network **100** and also have access to a set of suspect addresses maintained within the subnetwork **102**.

[0031] It should be understood that FIG. **1** illustrates a scenario having an adaptive interrogation module **104**, but the interrogation module **104** has not effected redirection of communications from inside the subnetwork **102** to suspect addresses in the external network **100**. As such, the communications **120** are passed through to the external network **100** by the router **108** and the firewall **110**.

[0032] FIG. **2** illustrates an external network **200** and a subnetwork **202** with an exemplary adaptive interrogation module **204** connected within the subnetwork **202** and receiving suspect addresses **206** over communications **208**. The suspect addresses **206** are received from one or more suspect address sources **210**. In one implementation, the suspect addresses **206** are received by the adaptive interrogation module **204** via an administrative connection. Using the suspect addresses **206**, the adaptive interrogation module **204** can configure a router **212** to redirect suspect messages to the interrogation module **204** for analysis (see, e.g., the discussion of FIG. **3**).

[0033] In one implementation, one or more of the suspect address sources **210** provide the suspect addresses as a Border Gateway Protocol (BGP) announcement, although other formats may be employed, including without limitation simple lists of IP addresses in Netrange format, CIDR prefix format, CIDR bit mask format, Dotted Decimal format, and/or announcements in other routing protocols, such as OSPG and RIP. BGP is an exterior gateway routing protocol that enables groups of routers (called autonomous systems or ASs) to share routing information so that efficient, loop-free routes can be established in the Internet. BGP is commonly used within and between Internet Service Providers (ISPs). The protocol is defined in RFC 1771. The suspect addresses may also include a "type" parameter indicating the type(s) of threat each address represents (e.g., bogon, badguy, etc.). The suspect addresses may also include the type of packet (e.g., UDP, TCP, etc.), although this information may also be determined from examination of a received packet.

[0034] In one implementation, the suspect addresses **206** are updated as any one of the suspect address sources **210** receives a change to its suspect address data (e.g., a new IP address block is legitimately allocated by IANA or a new hacker site is identified). By quickly updating the suspect addresses **206**, the suspect address sources **210** can provide the most up-to-date notice of possible threats. Likewise, by accepting recurrent updates, an adaptive interrogator **204** can adapt the security configuration of the subnetwork **202** to account for the changes in the suspected address **206**. As updates are received by the adaptive interrogation module **204**, the adaptive interrogation module **204** updates a (typically local) database of suspect addresses and reconfigures the router **212** according to the new information.

[0035] FIG. **3** illustrates an external network **300** and a subnetwork **302** with an exemplary adaptive interrogation module **304** connected within the subnetwork **302** and configuring a router **306**. Generally, the suspect addresses collected by the adaptive interrogation module **304** are stored in a database and sent to the router **306** over an administration connection. The adaptive interrogation module **304** configures the router **306** to redirect messages (e.g., packets) that originate inside the subnetwork **302** and are destined for one or more suspect addresses. In one implementation, the routing table or tables in the router **306** are altered such that any packet received from the subnetwork **302** with a destination address that is a member of the suspect addresses set is forwarded to the adaptive interrogation module **304** instead of being forwarded to the external network **300** along a route to the original destination address (i.e., a suspect address). Based on this configuration, such suspect messages are redirected by the router **306** to the adaptive interrogation module **304**.

[0036] With each suspect address update (or some frequency), the adaptive interrogation module **304** reconfigures the router **306** with a new set of suspect addresses, if any changes to the suspect address list have been made. In this manner, the adaptive interrogation module **304** adapts to the changes in threats from the external network **300** (e.g., as identified by suspect addresses received by the adaptive interrogation module **304**).

[0037] FIG. **4** illustrates an external network **400** and a subnetwork **402** with a router **406** redirecting suspect traffic to an adaptive interrogation module **404**. Based on the configuration of the router **406** by the adaptive interrogation module **404**, the router **406** detects any messages that originate within the subnetwork **402** and that are destined to a suspect address. In one implementation, as a router **406** typically operates at the network layer, the detection operation operates on the destination IP address of individual packets to determine whether the packets are destined for a suspect address.

[0038] It should be understood that threats could also be detected by evaluating other characteristics of a packet. For examples, another interface to the adaptive interrogation module **404** may be added to capture additional forensic/layer-4 data about a bot's behavior. Based on this behavior, an adaptive interrogation module **404** may be able to detected suspicious behavior and identify other suspect addresses not initially received from the suspect address sources.

[0039] The destination address, or some part thereof, of an outgoing packet is evaluated against addresses or address ranges in the routing table of the router **406**. In one implementation, the routing table includes entries for the suspect addresses (as configured by the adaptive interrogation module **404**). Such entries include an address for the adaptive interrogation module **404** as a forwarding address. In this manner, when the router **406** routes packets received from within the subnetwork **402**, suspect packets are redirected to the adaptive interrogation module **404** (see communications path **408**) while non-suspect packets are forwarded to an address in the appropriate routing sequence (see communications path **410**).

[0040] Although FIGS. **1-4** suggest an adaptive interrogator module physically located "within" a subnetwork, it should be understood that suspects packets may be redirected from within the subnetwork to an adaptive interrogator module that is remotely connected, such as via a VPN, a dedicated communication line, a secure tunnel, etc. As such, a remote adaptive interrogator module may be employed to interrogate outgoing subnetwork traffic for one or more subnetworks.

[0041] FIG. **5** illustrates exemplary operations **500** for redirecting suspect traffic. A receiving operation **502** receives suspect addresses from a suspect address source. In one implementation, the suspected addresses are received in a BGP format, although other formats are also contemplated. Based on the received suspect addresses, a configuration operation **504** configures a router to redirect packets received by the router from within the subnetwork and destined for a suspect address in the external network. The

destination of the redirection is an adaptive interrogation module, which can be integral to the router or separate from the router. As represented by the arrow **503**, the receiving operation **502** and the configuration operation **504** can cycle continually as the set of suspect addresses is updated.

[**0042**] Another receiving operation **506** receives messages from within the subnetwork. If a received message is destined for a suspect address in the external network, the message (e.g., one or more IP packets) is redirected to the adaptive interrogation module in a redirection operation **508**. An evaluation operation **510** examines the redirected packet to identify the source device that attempted to send the message out of the subnetwork. Such examination may be accomplished by examining message header data, payload data, or metadata to determine the source address or other source identifier. A display operation **512** displays the source address, the message type, the suspect address type, or other message-related information.

[**0043**] Identification of the source device may be accomplished in various circumstances. In one example, the source device uses an external IP address instead of a Network Address Translation (NAT) address. In this circumstance, the source address of the redirected packet may identify the source device that originated the suspect packet. Alternatively, if the subnetwork is using NAT, the adaptive interrogation module may be farther "inside" the subnetwork than the device providing the translation. Therefore, the IP address of the redirect packet may still identify the source device that originated the suspect packet. In yet another configuration, the NAT device may maintain static 1-to-1 NAT-to-public address mappings, where public addresses can be directly translated to the NAT addresses.

[**0044**] Other methods for identifying the source device of a suspect packet may be employed, including a brute force isolation of devices and branches within the subnetwork until the source device can be identified by changes in the redirected traffic. Alternatively, an additional port may be used to monitor traffic arrive at the NAT device from the local devices within the subnetwork, matching that traffic to corresponding external traffic, and building a table of connections for external mapping. In yet another configuration, if the subnetwork employs 1:1 NAT, but the internal addresses are assigned by the Dynamic Host Configuration Protocol (DHCP) (e.g., the mappings are not static), then the adaptive packet interrogation module may access the DHCP logs or a database of DHCP assignments. In subnetworks employing a NAT device, the NAT device itself may be queried to provide the IP or MAC address of the source device (e.g., using address, port, and timestamp logs).

[**0045**] FIG. **6** illustrates a schematic diagram of an exemplary interrogation device **600**. An administration interface **602** is coupled to a communications link **604**. In some implementations, this link **604** is a wired connection, although wireless connections are also contemplated. One or more feeds of suspect address information are received via the administration interface **602** and passed to a suspect address module **606**, which extracts the suspect addresses from the suspect address information and loads them into a database **608**. A configuration module **610** extracts the suspect address from the database **608** and causes suspect traffic to be redirected to a port **612** in the adaptive interrogation module **600**. In one implementation, for example, the configuration module **610** reconfigures a router to redirect such traffic (e.g., by causing one or more router tables to be altered) via a link **614**. The link **614**, which is coupled to the traffic interface **612** by a wired or wireless connection, may couple the adaptive interrogation module **600** to a router or some other device or module capable of detecting suspect traffic and forwarding the suspect traffic to the adaptive interrogation module **600**.

[**0046**] As mentioned, suspect traffic is redirected via the link **614** to the traffic interface **612**. The suspect traffic passes through a firewall module **616**, which logs the traffic, including source and destination addresses and hostnames of individual packets, if appropriate, into a firewall log **618**. A scanner module **620** reads the firewall log **618** and loads the read data into a scanner log **622**, which also includes the source and destination addresses of individual packets. In one implementation, the scanner module **620** can determine whether packets have suspicious addresses (e.g., based on the addresses in the database **608**), and if so, why they are considered suspicious (e.g., if they are addressed to unassigned address space, they are deemed "bogons", and if they are addressed to known command and control sites, they are deemed "bad guys"). For example, the address may be associated within the database **608** with a specific suspicious packet type. The scanner log **622** has a format understood by an alerting module **623**, which allows syslog, email, and text message alerting of events, as well as a database loader **624**, which loads the scanner log data into a database **626**. A reporting engine **625** reads data from the database **626** and formats reports for the web server **628** as well as allowing for additional future reporting export functionality. A web server module **628** is capable of accessing the reporting engine **625** and constructing web pages containing the reporting data. A browser module **630** receives the reporting data from the web server module **628** and displays the reporting data on a display **632**.

[**0047**] As discussed, the scanner module **620** can determine the suspect traffic type of a packet. In one implementation, a brute force loop comparing packet addresses to addresses in the database **608** is used to determine the suspect traffic type of each packet. Alternative methods may be employed, including without limitation hash table lookups, sparse arrays, lookups based on binary trees, etc. In another implementation, the PATRICIA (Practical Algorithm to Retrieve Information Coded in Alphanumeric) Trie algorithm is used.

[**0048**] FIG. **7** illustrates an exemplary screenshot **700** of an overview display from an adaptive interrogation device in an active (blocking) mode. The top left table shows the top ten source devices in the subnetwork that have attempted to send messages (e.g., IP packets) to suspect addresses. The top right table shows the top ten suspect address to which devices within the subnetwork have attempted to send messages, where "blocked" in the figure implies "redirected to the adaptive interrogation module instead of the suspect address". The bottom table shows a graphical representation of the times when source devices within the subnetwork attempted to send suspect traffic into the external network.

[**0049**] FIG. **8** illustrates an exemplary screenshot **800** of an activity graph from an adaptive interrogation device. The graph illustrates times when suspect traffic was received by the adaptive interrogation module and what type of suspect

traffic it was. Exemplary suspect traffic types are identified below:

TABLE 1

Suspect Traffic Types

Type of Suspect Traffic	Description
Bogons	Unallocated or reserved IP addresses
Badguys	Identified command and control node addresses or other identified threat addresses
Honeynet	Address space within a subnetwork that is not allocated to legitimate devices within the subnetwork but is allocated to detect "bots" scanning from within the subnetwork. For example, if 10.8.0.0 is not allocated to a legitimate device, then any device attempting to send a packet to that address may be a "bot".
At Me	The destination IP address is set to the address of the adaptive interrogation module. This event signifies an attack on the security framework and specifically the adaptive interrogation module.
Backscatter	A malicious device in the external network can spoof legitimate source addresses within the subnetwork during a denial-of-service (DoS) or ping attack on another device. The attacked node bounces the attacks back to the spoofed source address (in the subnetwork), providing the adaptive interrogation module with the source address of the attacked node.
Through Me	An attempt has been made to route a suspect packet through the adaptive interrogation device to some other destination address, absent determination of some other suspect traffic type.

[0050] FIG. **9** illustrates an exemplary screenshot **900** of a misbehaving hosts table from an adaptive interrogation device. The table lists: the source address, hostname, the destination address, the type of packet (e.g., protocol), the type of suspect address, a count of the number of received packets of that identified characteristic, and a timestamp for the packets receipt by the adaptive interrogation module.

[0051] FIG. **10** illustrates an exemplary system useful in implementations of the described technology. A general purpose computer system **1000** is capable of executing a computer program product to execute a computer process. Data and program files may be input to the computer system **1000**, which reads the files and executes the programs therein. Some of the elements of a general purpose computer system **1000** are shown in FIG. **10** wherein a processor **1002** is shown having an input/output (I/O) section **1004**, a Central Processing Unit (CPU) **1006**, and a memory section **1008**. There may be one or more processors **1002**, such that the processor **1002** of the computer system **1000** comprises a single central-processing unit **1006**, or a plurality of processing units, commonly referred to as a parallel processing environment. The computer system **1000** may be a conventional computer, a distributed computer, or any other type of computer. The described technology is optionally implemented in software devices loaded in memory **1008**, stored on a configured DVD/CD-ROM **1010** or storage unit **1012**, and/or communicated via a wired or wireless network link **1014** on a carrier signal, thereby transforming the computer system **1000** in FIG. **10** to a special purpose machine for implementing the described operations.

[0052] The I/O section **1004** is connected to one or more user-interface devices (e.g., a keyboard **1016** and a display unit **1018**), a disk storage unit **1012**, and a disk drive unit **1020**. Generally, in contemporary systems, the disk drive unit **1020** is a DVD/CD-ROM drive unit capable of reading the DVD/CD-ROM medium **1010**, which typically contains programs and data **1022**. Computer program products containing mechanisms to effectuate the systems and methods in accordance with the described technology may reside in the memory section **1004**, on a disk storage unit **1012**, or on the DVD/CD-ROM medium **1010** of such a system **1000**. Alternatively, a disk drive unit **1020** may be replaced or supplemented by a floppy drive unit, a tape drive unit, or other storage medium drive unit. The network adapter **1024** is capable of connecting the computer system to a network via the network link **1014**, through which the computer system can receive instructions and data embodied in a carrier wave. Examples of such systems include SPARC systems offered by Sun Microsystems, Inc., personal computers offered by Dell Corporation and by other manufacturers of Intel-compatible personal computers, PowerPC-based computing systems, ARM-based computing systems and other systems running a UNIX-based or other operating system. It should be understood that computing systems may also embody devices such as Personal Digital Assistants (PDAs), mobile phones, gaming consoles, set top boxes, etc.

[0053] When used in a LAN-networking environment, the computer system **1000** is connected (by wired connection or wirelessly) to a local network through one or more network interfaces or adapters **1024**, which is one type of communications device. When used in a WAN-networking environment, the computer system **1000** typically includes a modem, a network adapter, or any other type of communications device for establishing communications over the wide area network. In a networked environment, program modules depicted relative to the computer system **1000** or portions thereof, may be stored in a remote memory storage device. It is appreciated that the network connections shown are exemplary and other means of and communications devices for establishing a communications link between the computers may be used.

[0054] In accordance with an implementation, software instructions and data directed toward receiving suspect addresses, causing redirection of suspect traffic, identifying a source device sending a suspect message, and other operations may reside on disk storage unit **1009**, disk drive unit **1007** or other storage medium units coupled to the system. Said software instructions may also be executed by CPU **1006**.

[0055] FIG. **11** illustrates a schematic diagram of an exemplary adaptive system with interrogation module **1100** in a passive (listening) mode. An administration interface **1102** is coupled to a communications link **1104**. In some implementations, this link **1104** is a wired connection, although wireless connections are also contemplated. One or more feeds of suspect address information are received via the administration interface **1102** and passed to a suspect address module **1106**, which extracts the suspect addresses from the suspect address information and loads them into a database **1108**. The port **1112** is attached to a monitored or tapped connection **1113** between the core switch and the router, or some other network segment where a passive (listening) mode device is desired.

[0056] Here, suspect traffic is monitored via the link **1114** to the traffic interface **1112**. The suspect traffic passes

through a firewall module **1116**, which logs the traffic, including source and destination addresses of individual packets, if appropriate, into a firewall log **1118**. A scanner module **1120** reads the firewall log **1118** and loads the addresses that are determined to be suspicious (based on the suspect address information) into a scanner log **1122**, which also includes the source and destination addresses and hostnames of individual packets. In one implementation, the scanner module **1120** can determine whether packets have suspicious addresses (e.g., based on the addresses in the database **1108**), and if so, why they are considered suspicious (e.g., if they are addressed to unassigned address space, they are deemed "bogons", and if they are addressed to known command and control sites, they are deemed "bad guys"). For example, the address may be associated within the database **1108** with a specific suspicious packet type. The scanner log **1122** has a format understood by an alerting engine **1123** which allows syslog, email and text message alerting of events, as well as a database loader **1124**, which loads the scanner log data into a database **1126**. A reporting engine **1125** reads data from the database **1126** and formats reports for the web server **1128** as well as allowing for addition future reporting export functionality. A web server module **1128** is capable of accessing the reporting engine **1125** and constructing web pages containing the reporting data. A browser module **1130** receives the reporting data from the web server module **1128** and displays the reporting data on a display **1132**.

[**0057**] The scanner module **1120** can use a variety of mechanisms for passing data to the alerting engine **1123** and the suspicious activity databases. In one implementation, the scanner module **1120** can write directly to a log file, which is then read independently by the alerting engine **1123** or other modules. In an alternative implementation, the scanner module **1120** can use a syslog facility (e.g., a standard syslog facility or syslog-ng) to write to a log file and to directly trigger other alerting and/or logging action. In yet another implementation, the scanner module **1120** can send messages to the alerting engine **1123** using standard or proprietary interprocess communications (IPC) channels, either locally or across a communications network. Such IPC mechanisms may include UNIX or Internet Domain sockets, named pipes, and other system-based or proprietary mechanisms. Likewise, the firewall module **1116** may use similar methods to pass data to the scanning module **1120**. Other communications methods are also contemplated.

[**0058**] As discussed, the scanner module **1120** can determine the suspect traffic type of a packet. In one implementation, a brute force loop comparing packet addresses to addresses in the database **1108** is used to determine the suspect traffic type of each packet. Alternative methods may be employed, including without limitation hash table lookups, sparse arrays, lookups based on binary trees, etc. In another implementation, the PATRICIA (Practical Algorithm to Retrieve Information Coded in Alphanumeric) Trie algorithm is used.

[**0059**] The embodiments of the invention described herein are implemented as logical steps in one or more computer systems. The logical operations of the present invention are implemented (1) as a sequence of processor-implemented steps executing in one or more computer systems and (2) as interconnected machine or circuit modules within one or more computer systems. The implementation is a matter of choice, dependent on the performance requirements of the computer system implementing the invention. Accordingly, the logical operations making up the embodiments of the invention described herein are referred to variously as operations, steps, objects, or modules. Furthermore, it should be understood that logical operations may be performed in any order, unless explicitly claimed otherwise or a specific order is inherently necessitated by the claim language.

[**0060**] It should be understood that logical operations described and claimed herein may be performed in any order, unless explicitly claimed otherwise or a specific order is inherently necessitated by the claim language.

[**0061**] The above specification, examples and data provide a complete description of the structure and use of exemplary embodiments of the invention. Since many embodiments of the invention can be made without departing from the spirit and scope of the invention, the invention resides in the claims hereinafter appended. Furthermore, structural features of the different embodiments may be combined in yet another embodiment without departing from the recited claims.

What is claimed is:

1. A method comprising:

receiving within a subnetwork a set of suspect addresses, wherein the subnetwork is coupled to an external network and the suspect addresses represent device addresses in the external network;

detecting a message that originates from a noninteractive process of a source device within the subnetwork and is destined to at least one of the suspect addresses in the external network;

redirecting the message to an interrogation module; and

identifying the source device within the subnetwork based on the message.

2. The method of claim 1 further comprising:

configuring a router in the subnetwork to redirect messages that originate from a source device within the subnetwork and are destined to at least one of the suspect addresses in the external network.

3. The method of claim 2 further comprising:

receiving within the subnetwork an updated set of suspect addresses in the external network; and

configuring a router in the subnetwork to redirect messages that are destined to at least one of the suspect addresses in the updated set of suspect addresses in the external network.

4. The method of claim 1 further comprising:

altering a routing table of a router in the subnetwork to redirect messages that originate from a source device within the subnetwork and are destined to at least one of the suspect addresses in the external network.

5. The method of claim 4 further comprising:

receiving within the subnetwork an updated set of suspect addresses in the external network; and

altering a routing table of a router in the subnetwork to redirect messages that are destined to at least one of the

suspect addresses in the updated set of suspect addresses in the external network.

6. The method of claim 1 wherein the set of suspect addresses in the external network is received in Border Gateway Protocol format.

7. The method of claim 1 wherein the detecting operation comprises:

determining that the message includes a destination address that is a member of the set of suspect addresses.

8. The method of claim 1 wherein the detecting operation comprises:

determining that the message includes a source address that within the subnetwork.

9. The method of claim 1 wherein the redirecting operation comprises:

forwarding the message to a forwarding address in a routing table, wherein the forwarding address is associated with a suspect address in the routing table.

10. The method of claim 1 wherein a router receives the message and the redirecting operation comprises:

forwarding the message to the interrogation module within the router.

11. The method of claim 1 wherein a router receives the message and the redirecting operation comprises:

forwarding the message to an interrogation module at another address within the subnetwork.

12. The method of claim 1 wherein the identifying operation comprises:

examining the message to determine the source device address within the subnetwork.

13. The method of claim 1 wherein the identifying operation comprises:

examining the message to determine the destination address within the external network.

14. The method of claim 1 further comprising:

determining a type of suspect address to which the message was destined.

15. The method of claim 14 wherein the determining operation employs an implementation of the Practical Algorithm to Retrieve Information Coded in Alphanumeric to determine the type of suspect address to which the messages was destined.

16. The method of claim 1 further comprising:

determining the protocol type of the message.

17. A computer program product encoding a computer program for a computer process that executes on a computer system, the computer process comprising:

receiving within a subnetwork a set of suspect addresses, wherein the subnetwork is coupled to an external network and the suspect addresses represent device addresses in the external network;

detecting a message that originates from a process of a source device within the subnetwork and is destined to at least one of the suspect addresses in the external network, wherein the process has not been intentionally initiated by an authorized user of the client device;

redirecting the message to an interrogation module; and

identifying the source device within the subnetwork based on the message.

18. The computer program product of claim 17 wherein the computer process further comprises:

configuring a router in the subnetwork to redirect messages that originate from a source device within the subnetwork and are destined to at least one of the suspect addresses in the external network.

19. The computer program product of claim 18 wherein the computer process further comprises:

receiving within the subnetwork an updated set of suspect addresses in the external network; and

configuring a router in the subnetwork to redirect messages that are destined to at least one of the suspect addresses in the updated set of suspect addresses in the external network.

20. The computer program product of claim 17 wherein the computer process further comprises:

altering a routing table of a router in the subnetwork to redirect messages that originate from a source device within the subnetwork and are destined to at least one of the suspect addresses in the external network.

21. The computer program product of claim 20 wherein the computer process further comprises:

receiving within the subnetwork an updated set of suspect addresses in the external network; and

altering a routing table of a router in the subnetwork to redirect messages that are destined to at least one of the suspect addresses in the updated set of suspect addresses in the external network.

22. The computer program product of claim 17 wherein the set of suspect addresses in the external network is received in Border Gateway Protocol format.

23. The computer program product of claim 17 wherein the detecting operation comprises:

determining that the message includes a destination address that is a member of the set of suspect addresses.

24. The computer program product of claim 17 wherein the detecting operation comprises:

determining that the message includes a source address that within the subnetwork.

25. The computer program product of claim 17 wherein the redirecting operation comprises:

forwarding the message to a forwarding address in a routing table, wherein the forwarding address is associated with a suspect address in the routing table.

26. The computer program product of claim 17 wherein a router receives the message and the redirecting operation comprises:

forwarding the message to the interrogation module within the router.

27. The computer program product of claim 17 wherein a router receives the message and the redirecting operation comprises:

forwarding the message to an interrogation module at another address within the subnetwork.

28. The computer program product of claimed **17** wherein the identifying operation comprises:

examining the message to determine the source device address within the subnetwork.

29. The computer program of claim 17 wherein the identifying operation comprises:

examining the message to determine the destination address within the external network.

30. The computer program product of claim 17 further comprising:

determining a type of suspect address to which the message was destined.

31. The computer program product of claim 30 wherein the determining operation employs an implementation of the Practical Algorithm to Retrieve Information Coded in Alphanumeric to determine the type of suspect address to which the messages was destined.

32. The computer program products of claim 17 further comprising:

determining the protocol type of the message.

33. A system comprising:

an interface within a subnetwork a set of suspect addresses, wherein the subnetwork is coupled to an external network and the suspect addresses represent device addresses in the external network;

a router detecting a message that originates from a non-interactive process of a source device within the subnetwork and is destined to at least one of the suspect addresses in the external network and redirecting the message; and

an interrogation module receiving the redirected message and identifying the source device within the subnetwork based on the message.

34. A method comprising:

receiving within a subnetwork a set of suspect addresses, wherein the subnetwork is coupled to an external network and the suspect addresses represent device addresses in the external network;

receiving a redirected message, the redirected message originating from a noninteractive process of a source device within the subnetwork and being previously destined to at least one of the suspect addresses in the external network; and

identifying the source device within the subnetwork based on the message.

35. A computer-readable medium having computer-executable instructions for performing a computer process that implements the operations recited in claim 34.

36. A system comprising:

an interface receiving within a subnetwork a set of suspect addresses, wherein the subnetwork is coupled to an external network and the suspect addresses represent device addresses in the external network; and

an adaptive interrogation module receiving a redirected message, the redirected message originating from a source device within the subnetwork and being previously destined to at least one of the suspect addresses in the external network and identifying the source device within the subnetwork based in the message.

* * * * *